GlobalFoundries GF180MCU PDK

GlobalFoundries PDK Authors

Oct 05, 2022

CONTENTS

1 Digital Libraries **1**
1.1 Standard Cells . . . 1

2 Custom Design **2167**
2.1 Electrical Specifications . . . 2167
2.2 Interconnect Specifications . . . 2180
2.3 Model Parameters . . . 2222

3 IPs / Macros **2305**
3.1 I/O . . . 2305
3.2 SRAM . . . 2318

4 Physical Verification **2355**
4.1 Design Manual . . . 2355

5 Versioning Information **2541**
5.1 Version Number Format . . . 2541

6 Naming **2543**
6.1 Library Naming . . . 2543

7 How to Contribute **2545**
7.1 Contributor License Agreement . . . 2545
7.2 Code reviews . . . 2545
7.3 Community Guidelines . . . 2545

8 Google Open Source Community Guidelines **2547**
8.1 Resolve peacefully . . . 2547
8.2 Reporting problems . . . 2547

9 Google maintained open source PDKs **2549**

10 Resources **2551**

11 Current Status – Experimental Preview **2553**

CHAPTER

ONE

DIGITAL LIBRARIES

1.1 Standard Cells

1.1.1 7 track Standard Cells

5V Databook Setup and Conditions

Process Corner:	Typical
Voltage:	5.00 volt
Temperature:	25.0 °C

Reading Databook Symbols

Symbol	Definition
0	Logic Low
1	Logic High
HL	High to Low Transition
LH	Low to High Transition
↑	Positive Clock Edge
↓	Negative Clock edge
Tin	Input Transition 30 to70 %
Delay	50 to 50%
Tout	Output Transition 30 to 70%
?	Don't Care (Combinatorial Cells)
X	Don't Care (Sequential Cells)
default	No "when" condition for Input
n/a	No Transition

Physical Specifications

Process Scheme (#Poly/#Metal)	1P1M
Device Type	5V NMOS & 5V PMOS
Drawn Gate Length PMOS/NMOS(um)	0.50/0.60
Layer of Poly	1
Well Option	Outside DNWELL
Layer Grid (um)	0.005
Tracks per Cell	7
Cell Height (um)	3.92
Vertical/Horizontal Pin Grid (um)	0.56

Electrical Specifications

Operating Voltage	VDD = 1.62 - 5.5V
Operation Temperature	-40°C to 125°C

Maximum Transition

Lesser of 20% clock period or recommended value below

Process	Temperature	VDD Voltage	Max Transition
SS	-40°C	4.5V	1.25ns
SS	125°C	4.5V	1.75ns
TT	25°C	5.0V	1.00ns
FF	-40°C	5.5V	0.65ns
FF	125°C	5.5V	0.85ns
SS	-40°C	3.0V	2.75ns
SS	125°C	3.0V	3.90ns
TT	25°C	3.3V	2.15ns
FF	-40°C	3.6V	1.30ns
FF	125°C	3.6V	1.85ns
SS	-40°C	1.62V	5.25ns
SS	125°C	1.62V	6.25ns
TT	25°C	1.8V	3.00ns
FF	-40°C	1.98V	1.70ns
FF	125°C	1.98V	2.23ns

PVT Characterization Corners

Process	Temperature	VDD Voltage	PEX
SS	-40°C	4.5V	Worst RC
SS	125°C	4.5V	Worst RC
TT	25°C	5.0V	Typical RC
FF	-40°C	5.5V	Best RC
FF	125°C	5.5V	Best RC
SS	-40°C	3.0V	Worst RC
SS	125°C	3.0V	Worst RC
TT	25°C	3.3V	Typical RC
FF	-40°C	3.6V	Best RC
FF	125°C	3.6V	Best RC
SS	-40°C	1.62V	Worst RC
SS	125°C	1.62V	Worst RC
TT	25°C	1.8V	Typical RC
FF	-40°C	1.98V	Best RC
FF	125°C	1.98V	Best RC

gf180mcu_fd_sc_mcu7t5v0__addf_1

gf180mcu_fd_sc_mcu7t5v0__addf_1 symbol

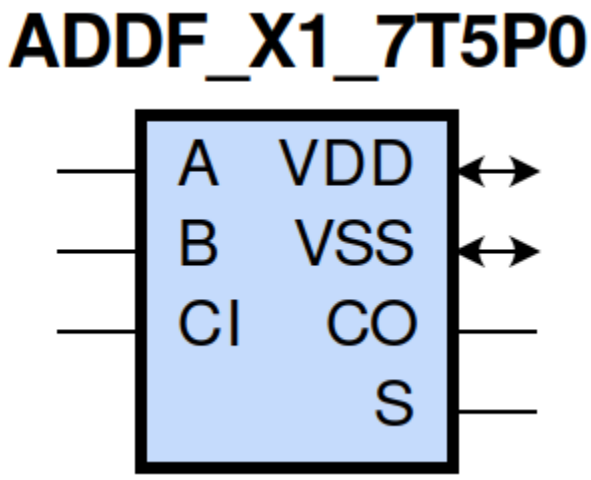

gf180mcu_fd_sc_mcu7t5v0__addf_1 schematic

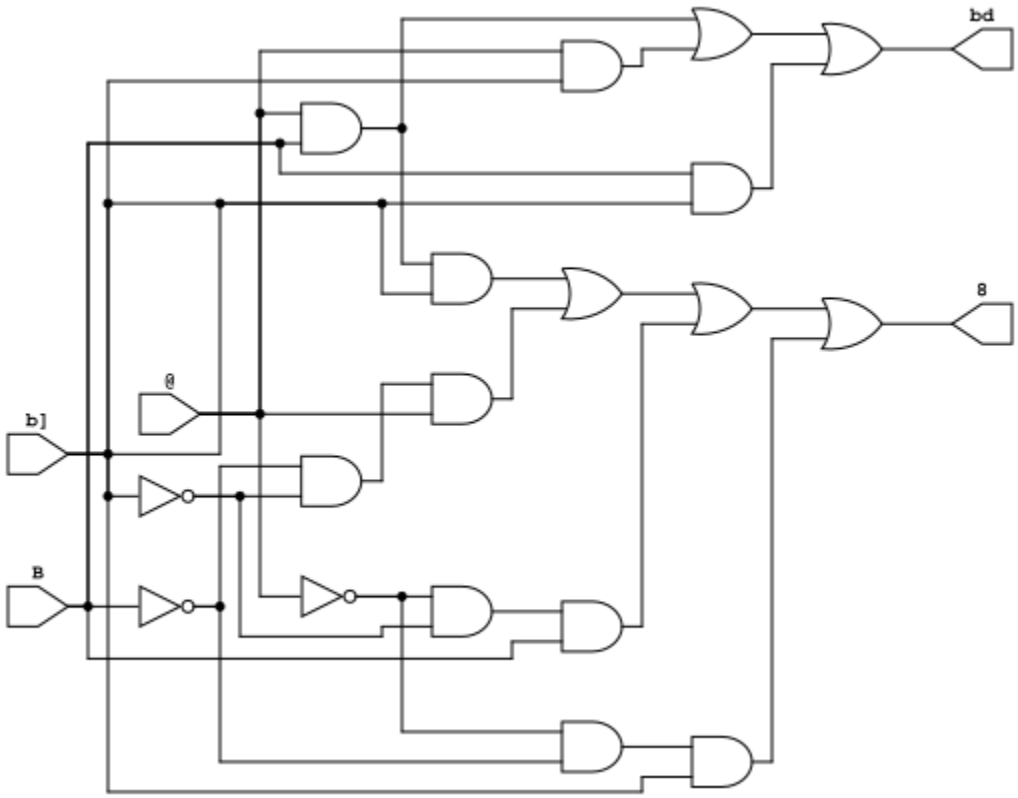

gf180mcu_fd_sc_mcu7t5v0__addf_1 layout

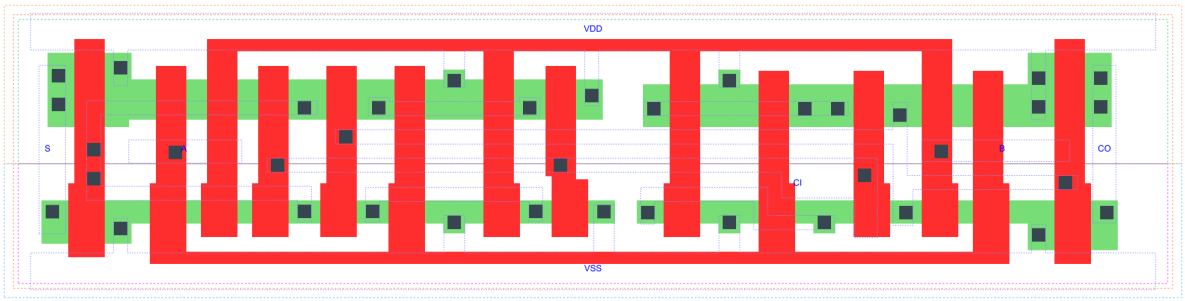

ADDF_X1 is a Full Adder, 1X drive strength

Attributes

Attribute	Value
area	72.441600 μm^2

OUTPUT FUNCTIONS

Output Pin	Function
S	(A^B^CI)
CO	((A&B)|(A&CI)|(B&CI))

TRUTH TABLE FOR S

A	B	CI	S
1	1	1	1
1	0	0	1
0	1	0	1
0	0	1	1
1	1	0	0
1	0	1	0
0	1	1	0
0	0	0	0

TRUTH TABLE FOR CO

A	B	CI	CO
1	1	?	1
1	?	1	1
?	1	1	1
0	0	?	0
0	?	0	0
?	0	0	0

FUNCTIONAL SCHEMATIC

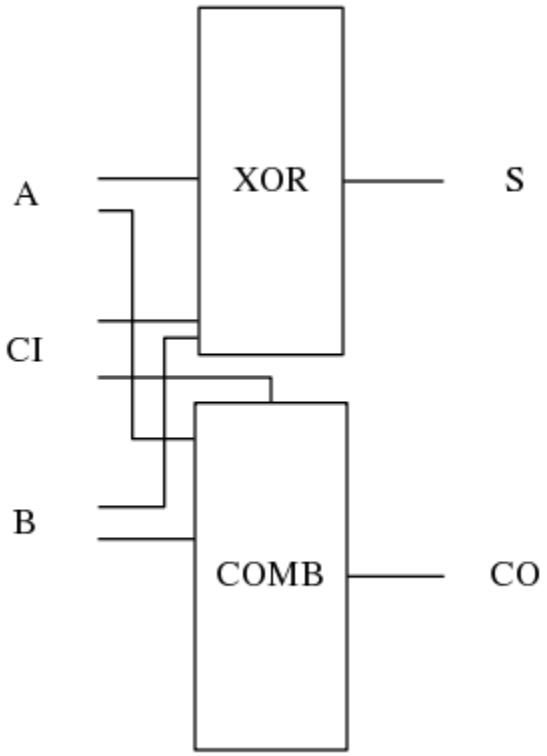

PIN CAPACITANCE (pf)

Pin	Type	Capacitance (pf)
A	input	0.0118
CI	input	0.0096
B	input	0.0114

DELAY AND OUTPUT TRANSITION TIME corresponding to min slew and load

Input Pin	Output	When Condition	Tin (ns)	Out Load (pf)	Delay (ns)	Tout (ns)
A(HL)	S(LH)	!B&CI	0.0100	0.0010	0.7991	0.0576
A(HL)	S(LH)	B&!CI	0.0100	0.0010	0.7884	0.0549
A(HL)	S(HL)	!B&!CI	0.0100	0.0010	0.5793	0.0895
A(HL)	S(HL)	B&CI	0.0100	0.0010	0.4121	0.0670
A(LH)	CO(LH)	!B&CI	0.0100	0.0010	0.4022	0.0610
A(LH)	CO(LH)	B&!CI	0.0100	0.0010	0.4131	0.0630
A(LH)	S(LH)	!B&!CI	0.0100	0.0010	0.3107	0.0534
A(LH)	S(LH)	B&CI	0.0100	0.0010	0.3962	0.0639
A(HL)	CO(HL)	!B&CI	0.0100	0.0010	0.5022	0.0829
A(HL)	CO(HL)	B&!CI	0.0100	0.0010	0.4791	0.0761

continues on next page

Table 1 – continued from previous page

A(LH)	S(HL)	!B&CI	0.0100	0.0010	0.6903	0.0642
A(LH)	S(HL)	B&!CI	0.0100	0.0010	0.6829	0.0668
CI(HL)	S(LH)	!A&B	0.0100	0.0010	0.7191	0.0554
CI(HL)	S(LH)	A&!B	0.0100	0.0010	0.7377	0.0576
CI(HL)	CO(HL)	!A&B	0.0100	0.0010	0.4149	0.0760
CI(HL)	CO(HL)	A&!B	0.0100	0.0010	0.3968	0.0787
CI(LH)	S(HL)	!A&B	0.0100	0.0010	0.6616	0.0682
CI(LH)	S(HL)	A&!B	0.0100	0.0010	0.6497	0.0642
CI(LH)	S(LH)	!A&!B	0.0100	0.0010	0.2841	0.0527
CI(LH)	S(LH)	A&B	0.0100	0.0010	0.3907	0.0638
CI(HL)	S(HL)	!A&!B	0.0100	0.0010	0.5447	0.0900
CI(HL)	S(HL)	A&B	0.0100	0.0010	0.3689	0.0657
CI(LH)	CO(LH)	!A&B	0.0100	0.0010	0.3425	0.0617
CI(LH)	CO(LH)	A&!B	0.0100	0.0010	0.3623	0.0611
B(LH)	S(LH)	!A&!CI	0.0100	0.0010	0.2922	0.0511
B(LH)	S(LH)	A&CI	0.0100	0.0010	0.3919	0.0638
B(LH)	CO(LH)	!A&CI	0.0100	0.0010	0.3778	0.0617
B(LH)	CO(LH)	A&!CI	0.0100	0.0010	0.4171	0.0631
B(HL)	S(HL)	!A&!CI	0.0100	0.0010	0.5723	0.0899
B(HL)	S(HL)	A&CI	0.0100	0.0010	0.3901	0.0631
B(HL)	S(LH)	!A&CI	0.0100	0.0010	0.7988	0.0577
B(HL)	S(LH)	A&!CI	0.0100	0.0010	0.7913	0.0577
B(HL)	CO(HL)	!A&CI	0.0100	0.0010	0.5017	0.0828
B(HL)	CO(HL)	A&!CI	0.0100	0.0010	0.4507	0.0777
B(LH)	S(HL)	!A&CI	0.0100	0.0010	0.6969	0.0684
B(LH)	S(HL)	A&!CI	0.0100	0.0010	0.6869	0.0671

DYNAMIC ENERGY

Input Pin	When Condition	Tin (ns)	Output	Out Load (pf)	Energy (uW/MHz)
B	!A&!CI	0.0100	S(LH)	0.0010	0.0892
B	A&CI	0.0100	S(LH)	0.0010	0.1345
B	!A&CI	0.0100	S(LH)	0.0010	0.3430
B	A&!CI	0.0100	S(LH)	0.0010	0.3302
A	!B&CI	0.0100	S(LH)	0.0010	0.3450
A	B&!CI	0.0100	S(LH)	0.0010	0.3283
A	!B&!CI	0.0100	S(LH)	0.0010	0.1000
A	B&CI	0.0100	S(LH)	0.0010	0.1175
B	!A&CI	0.0100	CO(LH)	0.0010	0.1881
B	A&!CI	0.0100	CO(LH)	0.0010	0.2124
CI	!A&B	0.0100	S(LH)	0.0010	0.3001
CI	A&!B	0.0100	S(LH)	0.0010	0.3093
CI	!A&!B	0.0100	S(LH)	0.0010	0.1416
CI	A&B	0.0100	S(LH)	0.0010	0.1636
CI	!A&B	0.0100	CO(HL)	0.0010	0.3292
CI	A&!B	0.0100	CO(HL)	0.0010	0.3365
B	!A&!CI	0.0100	S(HL)	0.0010	0.4203

continues on next page

Table 2 – continued from previous page

B	A&CI	0.0100	S(HL)	0.0010	0.3388
B	!A&CI	0.0100	S(HL)	0.0010	0.1986
B	A&!CI	0.0100	S(HL)	0.0010	0.2156
CI	!A&B	0.0100	S(HL)	0.0010	0.2161
CI	A&!B	0.0100	S(HL)	0.0010	0.2076
CI	!A&!B	0.0100	S(HL)	0.0010	0.3885
CI	A&B	0.0100	S(HL)	0.0010	0.3292
A	!B&!CI	0.0100	S(HL)	0.0010	0.4309
A	B&CI	0.0100	S(HL)	0.0010	0.3807
A	!B&CI	0.0100	S(HL)	0.0010	0.1891
A	B&!CI	0.0100	S(HL)	0.0010	0.2027
A	!B&CI	0.0100	CO(LH)	0.0010	0.1834
A	B&!CI	0.0100	CO(LH)	0.0010	0.1992
B	!A&CI	0.0100	CO(HL)	0.0010	0.3772
B	A&!CI	0.0100	CO(HL)	0.0010	0.3568
CI	!A&B	0.0100	CO(LH)	0.0010	0.2060
CI	A&!B	0.0100	CO(LH)	0.0010	0.2018
A	!B&CI	0.0100	CO(HL)	0.0010	0.3794
A	B&!CI	0.0100	CO(HL)	0.0010	0.3581

LEAKAGE POWER

When Condition	Power (nW)
!A&!B&!CI	0.2906
!A&!B&CI	0.2692
!A&B&!CI	0.2841
A&!B&!CI	0.2793
!A&B&CI	0.2880
A&!B&CI	0.2841
A&B&!CI	0.2626
A&B&CI	0.2790

gf180mcu_fd_sc_mcu7t5v0__addf_2

gf180mcu_fd_sc_mcu7t5v0__addf_2 symbol

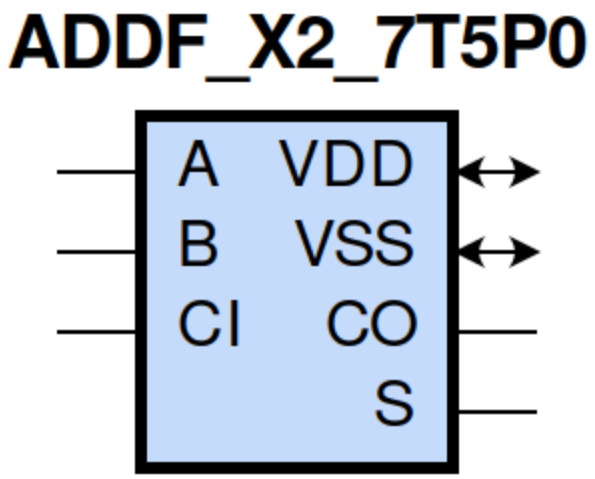

gf180mcu_fd_sc_mcu7t5v0__addf_2 schematic

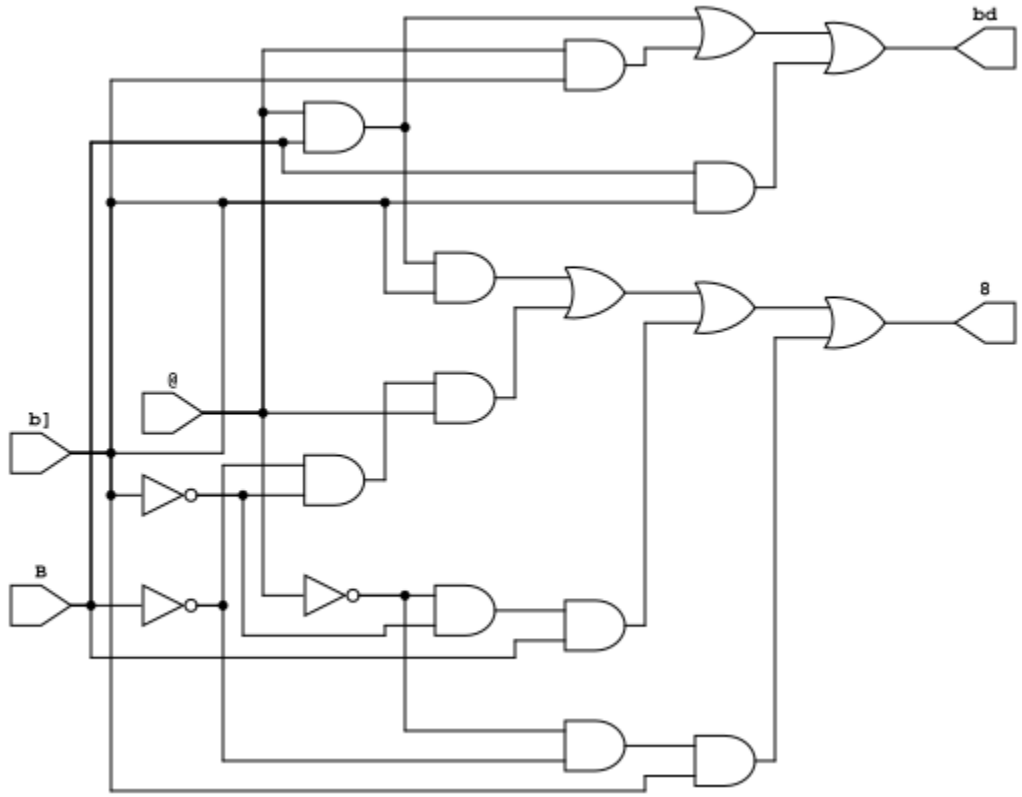

gf180mcu_fd_sc_mcu7t5v0__addf_2 layout

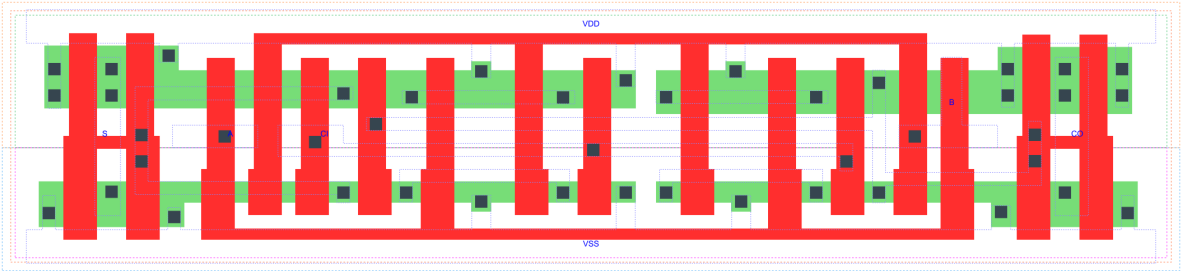

ADDF_X2 is a Full Adder, 2X drive strength

Attributes

Attribute	Value
area	79.027200 μm^2

OUTPUT FUNCTIONS

Output Pin	Function
S	(A^B^CI)
CO	((A&B)|(A&CI)|(B&CI))

TRUTH TABLE FOR S

A	B	CI	S
1	1	1	1
1	0	0	1
0	1	0	1
0	0	1	1
1	1	0	0
1	0	1	0
0	1	1	0
0	0	0	0

TRUTH TABLE FOR CO

A	B	CI	CO
1	1	?	1
1	?	1	1
?	1	1	1
0	0	?	0
0	?	0	0
?	0	0	0

FUNCTIONAL SCHEMATIC

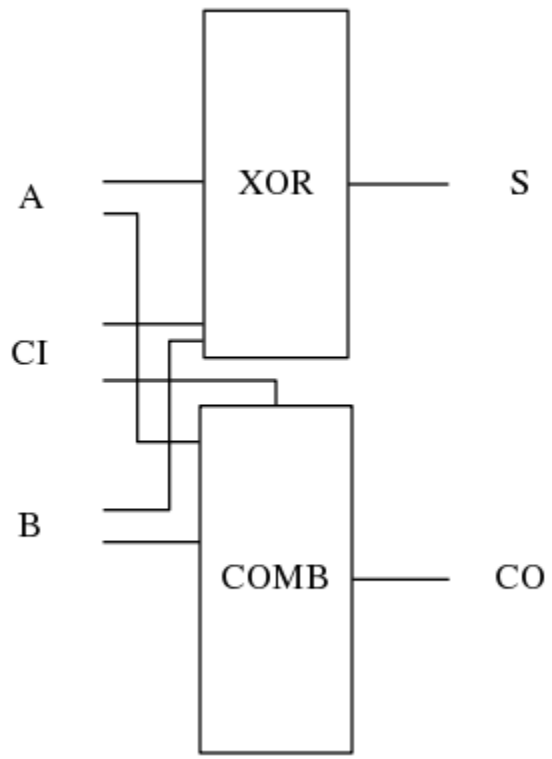

PIN CAPACITANCE (pf)

Pin	Type	Capacitance (pf)
A	input	0.0119
CI	input	0.0096
B	input	0.0117

DELAY AND OUTPUT TRANSITION TIME corresponding to min slew and load

Input Pin	Output	When Condition	Tin (ns)	Out Load (pf)	Delay (ns)	Tout (ns)
A(HL)	S(LH)	!B&CI	0.0100	0.0010	0.9474	0.0574
A(HL)	S(LH)	B&!CI	0.0100	0.0010	0.9503	0.0557
A(HL)	S(HL)	!B&!CI	0.0100	0.0010	0.6599	0.0955
A(HL)	S(HL)	B&CI	0.0100	0.0010	0.4670	0.0701
A(LH)	CO(LH)	!B&CI	0.0100	0.0010	0.4604	0.0587
A(LH)	CO(LH)	B&!CI	0.0100	0.0010	0.4767	0.0602
A(LH)	S(LH)	!B&!CI	0.0100	0.0010	0.3891	0.0530
A(LH)	S(LH)	B&CI	0.0100	0.0010	0.5072	0.0652
A(HL)	CO(HL)	!B&CI	0.0100	0.0010	0.5130	0.0779
A(HL)	CO(HL)	B&!CI	0.0100	0.0010	0.5010	0.0736
A(LH)	S(HL)	!B&CI	0.0100	0.0010	0.8370	0.0692
A(LH)	S(HL)	B&!CI	0.0100	0.0010	0.8336	0.0709
CI(HL)	S(LH)	!A&B	0.0100	0.0010	0.8908	0.0561
CI(HL)	S(LH)	A&!B	0.0100	0.0010	0.9172	0.0577
CI(HL)	CO(HL)	!A&B	0.0100	0.0010	0.4469	0.0735
CI(HL)	CO(HL)	A&!B	0.0100	0.0010	0.4309	0.0762
CI(LH)	S(HL)	!A&B	0.0100	0.0010	0.8101	0.0726
CI(LH)	S(HL)	A&!B	0.0100	0.0010	0.8031	0.0690
CI(LH)	S(LH)	!A&!B	0.0100	0.0010	0.3553	0.0519
CI(LH)	S(LH)	A&B	0.0100	0.0010	0.5031	0.0656
CI(HL)	S(HL)	!A&!B	0.0100	0.0010	0.6249	0.0958
CI(HL)	S(HL)	A&B	0.0100	0.0010	0.4263	0.0684
CI(LH)	CO(LH)	!A&B	0.0100	0.0010	0.4047	0.0585
CI(LH)	CO(LH)	A&!B	0.0100	0.0010	0.4275	0.0584
B(LH)	S(LH)	!A&!CI	0.0100	0.0010	0.3669	0.0511
B(LH)	S(LH)	A&CI	0.0100	0.0010	0.5029	0.0661
B(LH)	CO(LH)	!A&CI	0.0100	0.0010	0.4335	0.0586
B(LH)	CO(LH)	A&!CI	0.0100	0.0010	0.4827	0.0602
B(HL)	S(HL)	!A&!CI	0.0100	0.0010	0.6523	0.0956
B(HL)	S(HL)	A&CI	0.0100	0.0010	0.4477	0.0668
B(HL)	S(LH)	!A&CI	0.0100	0.0010	0.9465	0.0574
B(HL)	S(LH)	A&!CI	0.0100	0.0010	0.9624	0.0577
B(HL)	CO(HL)	!A&CI	0.0100	0.0010	0.5118	0.0777
B(HL)	CO(HL)	A&!CI	0.0100	0.0010	0.4769	0.0750
B(LH)	S(HL)	!A&CI	0.0100	0.0010	0.8383	0.0725
B(LH)	S(HL)	A&!CI	0.0100	0.0010	0.8402	0.0709

DYNAMIC ENERGY

Input Pin	When Condition	Tin (ns)	Output	Out Load (pf)	Energy (uW/MHz)
B	!A&!CI	0.0100	S(LH)	0.0010	0.2272
B	A&CI	0.0100	S(LH)	0.0010	0.3328
B	!A&CI	0.0100	S(LH)	0.0010	0.5442
B	A&!CI	0.0100	S(LH)	0.0010	0.5387
A	!B&CI	0.0100	S(LH)	0.0010	0.5469
A	B&!CI	0.0100	S(LH)	0.0010	0.5303

continues on next page

Table 4 – continued from previous page

A	!B&!CI	0.0100	S(LH)	0.0010	0.2451
A	B&CI	0.0100	S(LH)	0.0010	0.3138
B	!A&CI	0.0100	CO(LH)	0.0010	0.3896
B	A&!CI	0.0100	CO(LH)	0.0010	0.4171
CI	!A&B	0.0100	S(LH)	0.0010	0.5008
CI	A&!B	0.0100	S(LH)	0.0010	0.5184
CI	!A&!B	0.0100	S(LH)	0.0010	0.2748
CI	A&B	0.0100	S(LH)	0.0010	0.3642
CI	!A&B	0.0100	CO(HL)	0.0010	0.5396
CI	A&!B	0.0100	CO(HL)	0.0010	0.5527
B	!A&!CI	0.0100	S(HL)	0.0010	0.7529
B	A&CI	0.0100	S(HL)	0.0010	0.5672
B	!A&CI	0.0100	S(HL)	0.0010	0.4193
B	A&!CI	0.0100	S(HL)	0.0010	0.4378
CI	!A&B	0.0100	S(HL)	0.0010	0.4384
CI	A&!B	0.0100	S(HL)	0.0010	0.4254
CI	!A&!B	0.0100	S(HL)	0.0010	0.7177
CI	A&B	0.0100	S(HL)	0.0010	0.5577
A	!B&!CI	0.0100	S(HL)	0.0010	0.7635
A	B&CI	0.0100	S(HL)	0.0010	0.6199
A	!B&CI	0.0100	S(HL)	0.0010	0.4059
A	B&!CI	0.0100	S(HL)	0.0010	0.4241
A	!B&CI	0.0100	CO(LH)	0.0010	0.3816
A	B&!CI	0.0100	CO(LH)	0.0010	0.4035
B	!A&CI	0.0100	CO(HL)	0.0010	0.5863
B	A&!CI	0.0100	CO(HL)	0.0010	0.5728
CI	!A&B	0.0100	CO(LH)	0.0010	0.4089
CI	A&!B	0.0100	CO(LH)	0.0010	0.4018
A	!B&CI	0.0100	CO(HL)	0.0010	0.5901
A	B&!CI	0.0100	CO(HL)	0.0010	0.5696

LEAKAGE POWER

When Condition	Power (nW)
!A&!B&!CI	0.3436
!A&!B&CI	0.3210
!A&B&!CI	0.3360
A&!B&!CI	0.3313
!A&B&CI	0.3399
A&!B&CI	0.3360
A&B&!CI	0.3145
A&B&CI	0.3300

gf180mcu_fd_sc_mcu7t5v0__addf_4

gf180mcu_fd_sc_mcu7t5v0__addf_4 symbol

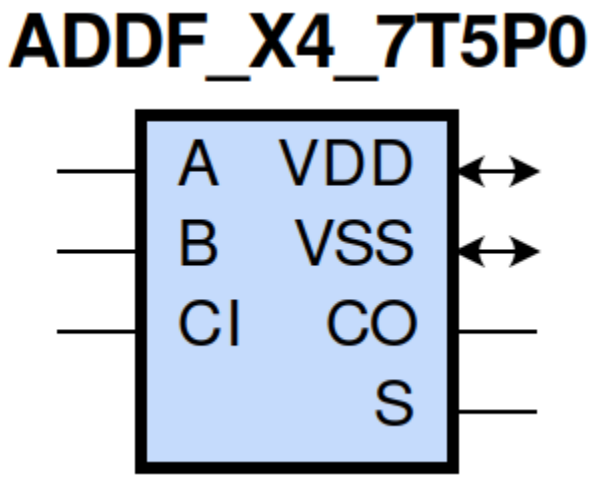

gf180mcu_fd_sc_mcu7t5v0__addf_4 schematic

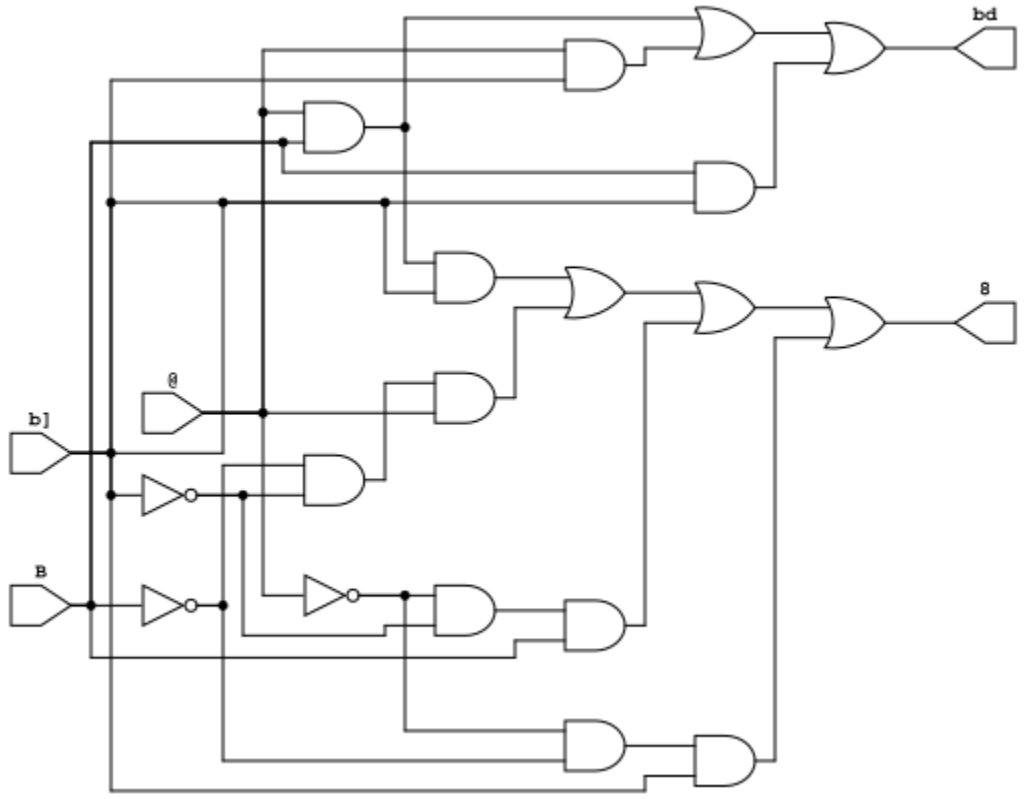

gf180mcu_fd_sc_mcu7t5v0__addf_4 layout

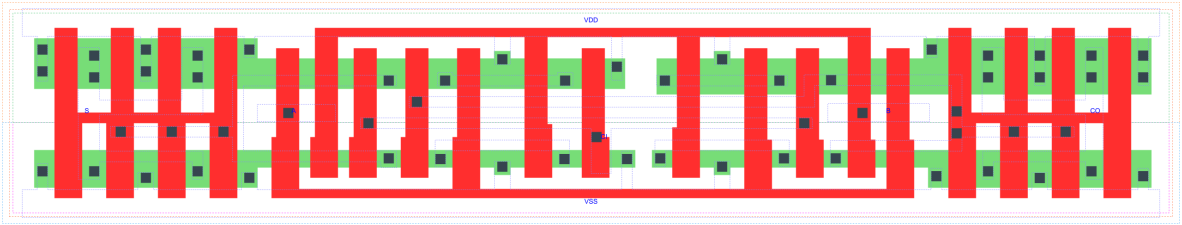

ADDF_X4 is a Full Adder, 4X drive strength

Attributes

Attribute	Value
area	96.588800 μm^2

OUTPUT FUNCTIONS

Output Pin	Function
S	(A^B^CI)
CO	((A&B)|(A&CI)|(B&CI))

TRUTH TABLE FOR S

A	B	CI	S
1	1	1	1
1	0	0	1
0	1	0	1
0	0	1	1
1	1	0	0
1	0	1	0
0	1	1	0
0	0	0	0

TRUTH TABLE FOR CO

A	B	CI	CO
1	1	?	1
1	?	1	1
?	1	1	1
0	0	?	0
0	?	0	0
?	0	0	0

FUNCTIONAL SCHEMATIC

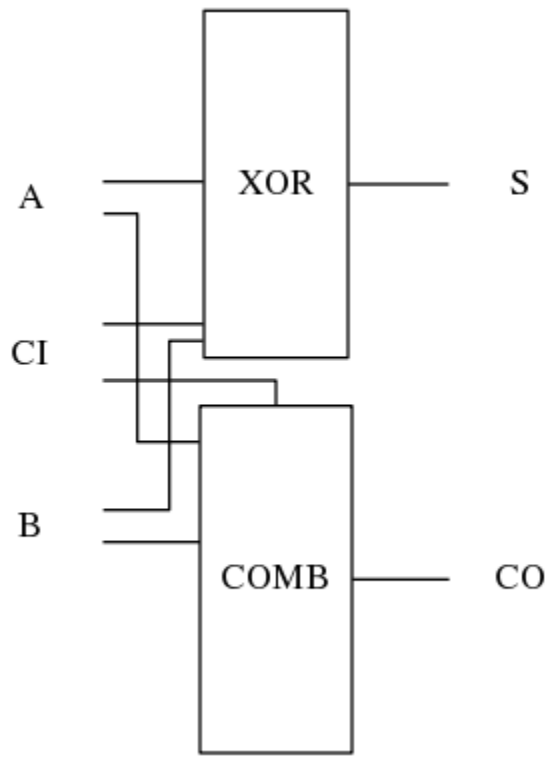

PIN CAPACITANCE (pf)

Pin	Type	Capacitance (pf)
A	input	0.0119
CI	input	0.0094
B	input	0.0116

DELAY AND OUTPUT TRANSITION TIME corresponding to min slew and load

Input Pin	Output	When Condition	Tin (ns)	Out Load (pf)	Delay (ns)	Tout (ns)
A(HL)	S(LH)	!B&CI	0.0100	0.0010	1.4319	0.0788
A(HL)	S(LH)	B&!CI	0.0100	0.0010	1.4313	0.0770
A(HL)	S(HL)	!B&!CI	0.0100	0.0010	0.9658	0.1422
A(HL)	S(HL)	B&CI	0.0100	0.0010	0.6788	0.1036
A(LH)	CO(LH)	!B&CI	0.0100	0.0010	0.6298	0.0781
A(LH)	CO(LH)	B&!CI	0.0100	0.0010	0.6455	0.0794
A(LH)	S(LH)	!B&!CI	0.0100	0.0010	0.5535	0.0714
A(LH)	S(LH)	B&CI	0.0100	0.0010	0.7250	0.0906
A(HL)	CO(HL)	!B&CI	0.0100	0.0010	0.7088	0.1064
A(HL)	CO(HL)	B&!CI	0.0100	0.0010	0.6951	0.1026
A(LH)	S(HL)	!B&CI	0.0100	0.0010	1.2785	0.1050
A(LH)	S(HL)	B&!CI	0.0100	0.0010	1.2742	0.1067
CI(HL)	S(LH)	!A&B	0.0100	0.0010	1.3739	0.0774
CI(HL)	S(LH)	A&!B	0.0100	0.0010	1.4029	0.0788
CI(HL)	CO(HL)	!A&B	0.0100	0.0010	0.6427	0.1026
CI(HL)	CO(HL)	A&!B	0.0100	0.0010	0.6275	0.1056
CI(LH)	S(HL)	!A&B	0.0100	0.0010	1.2504	0.1078
CI(LH)	S(HL)	A&!B	0.0100	0.0010	1.2452	0.1049
CI(LH)	S(LH)	!A&!B	0.0100	0.0010	0.5192	0.0703
CI(LH)	S(LH)	A&B	0.0100	0.0010	0.7209	0.0905
CI(HL)	S(HL)	!A&!B	0.0100	0.0010	0.9332	0.1423
CI(HL)	S(HL)	A&B	0.0100	0.0010	0.6384	0.1023
CI(LH)	CO(LH)	!A&B	0.0100	0.0010	0.5722	0.0771
CI(LH)	CO(LH)	A&!B	0.0100	0.0010	0.5974	0.0776
B(LH)	S(LH)	!A&!CI	0.0100	0.0010	0.5294	0.0699
B(LH)	S(LH)	A&CI	0.0100	0.0010	0.7213	0.0906
B(LH)	CO(LH)	!A&CI	0.0100	0.0010	0.6004	0.0771
B(LH)	CO(LH)	A&!CI	0.0100	0.0010	0.6514	0.0790
B(HL)	S(HL)	!A&!CI	0.0100	0.0010	0.9591	0.1424
B(HL)	S(HL)	A&CI	0.0100	0.0010	0.6597	0.1009
B(HL)	S(LH)	!A&CI	0.0100	0.0010	1.4298	0.0786
B(HL)	S(LH)	A&!CI	0.0100	0.0010	1.4433	0.0795
B(HL)	CO(HL)	!A&CI	0.0100	0.0010	0.7060	0.1061
B(HL)	CO(HL)	A&!CI	0.0100	0.0010	0.6688	0.1045
B(LH)	S(HL)	!A&CI	0.0100	0.0010	1.2779	0.1077
B(LH)	S(HL)	A&!CI	0.0100	0.0010	1.2809	0.1072

DYNAMIC ENERGY

Input Pin	When Condition	Tin (ns)	Output	Out Load (pf)	Energy (uW/MHz)
B	!A&!CI	0.0100	S(LH)	0.0010	0.6916
B	A&CI	0.0100	S(LH)	0.0010	0.9542
B	!A&CI	0.0100	S(LH)	0.0010	1.2532
B	A&!CI	0.0100	S(LH)	0.0010	1.2412
A	!B&CI	0.0100	S(LH)	0.0010	1.2566
A	B&!CI	0.0100	S(LH)	0.0010	1.2226

continues on next page

Table 6 – continued from previous page

A	!B&!CI	0.0100	S(LH)	0.0010	0.7207
A	B&CI	0.0100	S(LH)	0.0010	0.9348
B	!A&CI	0.0100	CO(LH)	0.0010	1.0651
B	A&!CI	0.0100	CO(LH)	0.0010	1.0931
CI	!A&B	0.0100	S(LH)	0.0010	1.1945
CI	A&!B	0.0100	S(LH)	0.0010	1.2229
CI	!A&!B	0.0100	S(LH)	0.0010	0.7433
CI	A&B	0.0100	S(LH)	0.0010	0.9852
CI	!A&B	0.0100	CO(HL)	0.0010	1.2109
CI	A&!B	0.0100	CO(HL)	0.0010	1.2370
B	!A&!CI	0.0100	S(HL)	0.0010	1.8205
B	A&CI	0.0100	S(HL)	0.0010	1.3090
B	!A&CI	0.0100	S(HL)	0.0010	1.1050
B	A&!CI	0.0100	S(HL)	0.0010	1.1277
CI	!A&B	0.0100	S(HL)	0.0010	1.1237
CI	A&!B	0.0100	S(HL)	0.0010	1.1051
CI	!A&!B	0.0100	S(HL)	0.0010	1.7860
CI	A&B	0.0100	S(HL)	0.0010	1.3041
A	!B&!CI	0.0100	S(HL)	0.0010	1.8296
A	B&CI	0.0100	S(HL)	0.0010	1.3766
A	!B&CI	0.0100	S(HL)	0.0010	1.0862
A	B&!CI	0.0100	S(HL)	0.0010	1.1123
A	!B&CI	0.0100	CO(LH)	0.0010	1.0503
A	B&!CI	0.0100	CO(LH)	0.0010	1.0795
B	!A&CI	0.0100	CO(HL)	0.0010	1.2681
B	A&!CI	0.0100	CO(HL)	0.0010	1.2555
CI	!A&B	0.0100	CO(LH)	0.0010	1.0841
CI	A&!B	0.0100	CO(LH)	0.0010	1.0707
A	!B&CI	0.0100	CO(HL)	0.0010	1.2724
A	B&!CI	0.0100	CO(HL)	0.0010	1.2399

LEAKAGE POWER

When Condition	Power (nW)
!A&!B&!CI	0.4490
!A&!B&CI	0.4249
!A&B&!CI	0.4399
A&!B&!CI	0.4352
!A&B&CI	0.4436
A&!B&CI	0.4397
A&B&!CI	0.4182
A&B&CI	0.4318

gf180mcu_fd_sc_mcu7t5v0__addh_1

gf180mcu_fd_sc_mcu7t5v0__addh_1 symbol

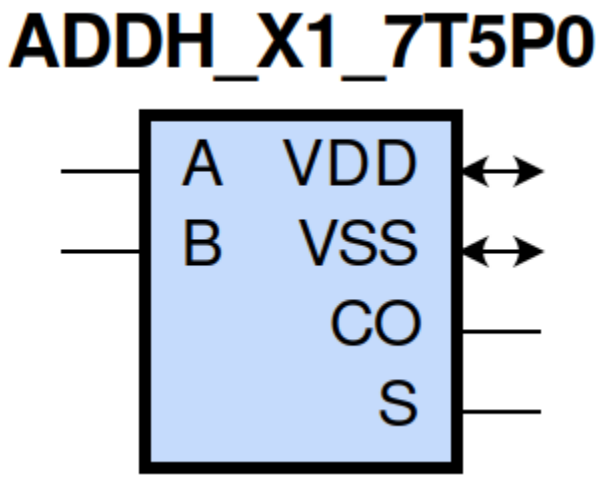

gf180mcu_fd_sc_mcu7t5v0__addh_1 schematic

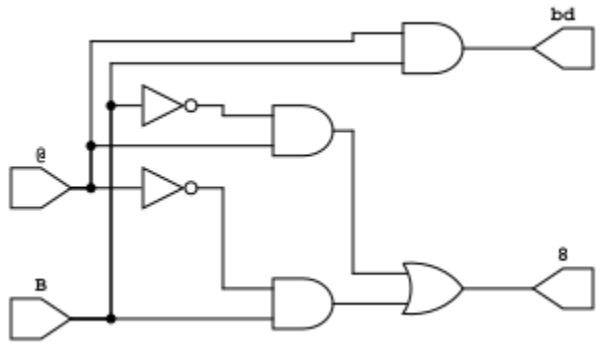

gf180mcu_fd_sc_mcu7t5v0__addh_1 layout

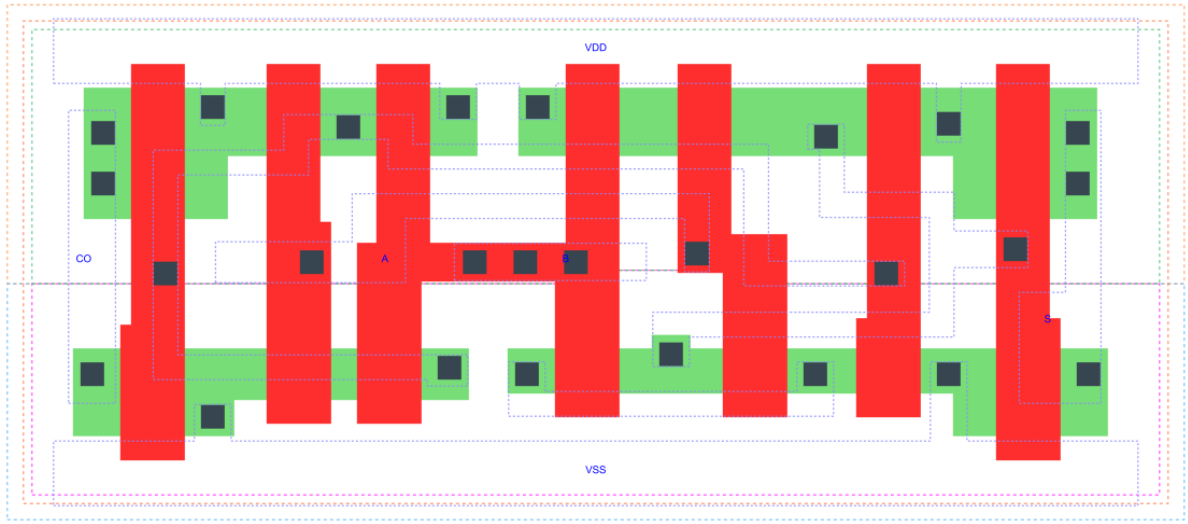

ADDH_X1 is a Half Adder, 1X drive strength

Attributes

Attribute	Value
area	39.513600 μm^2

OUTPUT FUNCTIONS

Output Pin	Function
CO	(A&B)
S	(A^B)

TRUTH TABLE FOR CO

A	B	CO
1	1	1
0	?	0
?	0	0

TRUTH TABLE FOR S

A	B	S
1	0	1
0	1	1
1	1	0
0	0	0

FUNCTIONAL SCHEMATIC

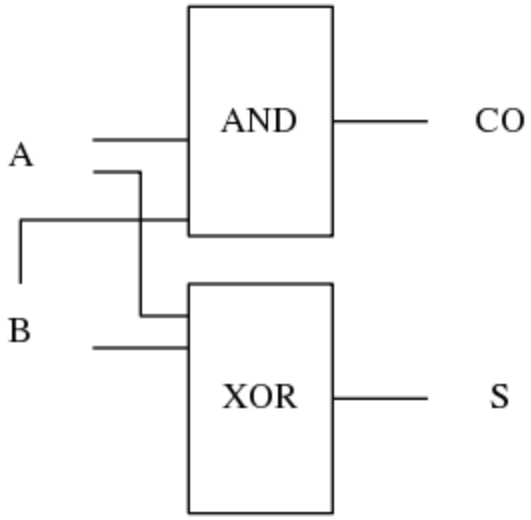

PIN CAPACITANCE (pf)

Pin	Type	Capacitance (pf)
A	input	0.0064
B	input	0.0053

DELAY AND OUTPUT TRANSITION TIME corresponding to min slew and load

Input Pin	Output	When Condition	Tin (ns)	Out Load (pf)	Delay (ns)	Tout (ns)
A(HL)	S(LH)	B	0.0100	0.0010	0.5362	0.0523
A(HL)	S(HL)	!B	0.0100	0.0010	0.3191	0.0608
A(LH)	CO(LH)	B	0.0100	0.0010	0.2764	0.0522
A(LH)	S(LH)	!B	0.0100	0.0010	0.2302	0.0497
A(HL)	CO(HL)	B	0.0100	0.0010	0.2705	0.0525
A(LH)	S(HL)	B	0.0100	0.0010	0.4980	0.0518
B(LH)	S(LH)	!A	0.0100	0.0010	0.2593	0.0515
B(LH)	CO(LH)	A	0.0100	0.0010	0.2657	0.0522
B(HL)	S(HL)	!A	0.0100	0.0010	0.3458	0.0607
B(HL)	S(LH)	A	0.0100	0.0010	0.4896	0.0509
B(HL)	CO(HL)	A	0.0100	0.0010	0.2536	0.0495
B(LH)	S(HL)	A	0.0100	0.0010	0.4860	0.0517

DYNAMIC ENERGY

Input Pin	When Condition	Tin (ns)	Output	Out Load (pf)	Energy (uW/MHz)
B	!A	0.0100	S(LH)	0.0010	0.1411
B	A	0.0100	S(LH)	0.0010	0.2340
A	B	0.0100	S(LH)	0.0010	0.2552
A	!B	0.0100	S(LH)	0.0010	0.1177
B	A	0.0100	CO(LH)	0.0010	0.2000
B	!A	0.0100	S(HL)	0.0010	0.2809
B	A	0.0100	S(HL)	0.0010	0.2077
A	!B	0.0100	S(HL)	0.0010	0.2650
A	B	0.0100	S(HL)	0.0010	0.2143
A	B	0.0100	CO(LH)	0.0010	0.2064
B	A	0.0100	CO(HL)	0.0010	0.2415
A	B	0.0100	CO(HL)	0.0010	0.2624

LEAKAGE POWER

When Condition	Power (nW)
!A&!B	0.1804
!A&B	0.2561
A&!B	0.1799
A&B	0.2660

gf180mcu_fd_sc_mcu7t5v0__addh_2

gf180mcu_fd_sc_mcu7t5v0__addh_2 symbol

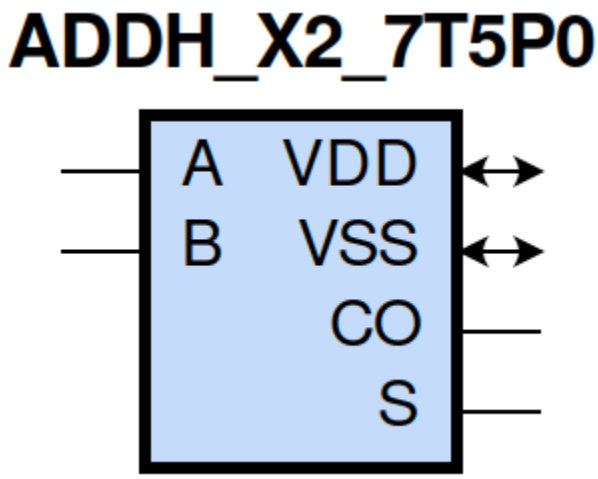

gf180mcu_fd_sc_mcu7t5v0__addh_2 schematic

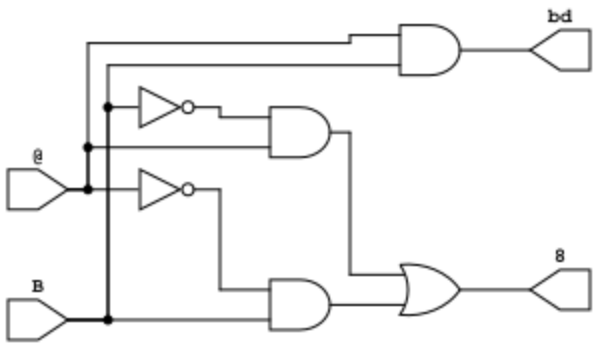

gf180mcu_fd_sc_mcu7t5v0__addh_2 layout

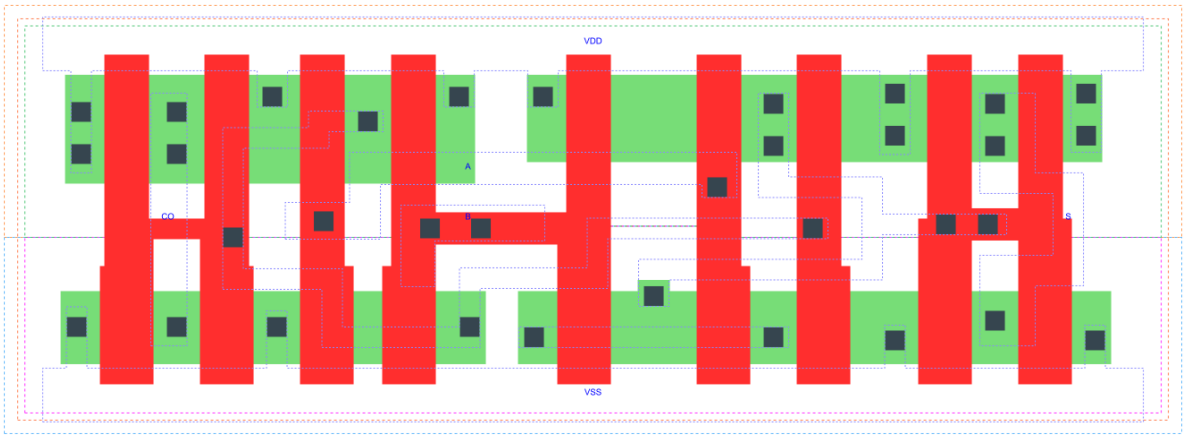

ADDH_X2 is a Half Adder, 2X drive strength

Attributes

Attribute	Value
area	48.294400 μm^2

OUTPUT FUNCTIONS

Output Pin	Function
CO	(A&B)
S	(A^B)

TRUTH TABLE FOR CO

A	B	CO
1	1	1
0	?	0
?	0	0

TRUTH TABLE FOR S

A	B	S
1	0	1
0	1	1
1	1	0
0	0	0

FUNCTIONAL SCHEMATIC

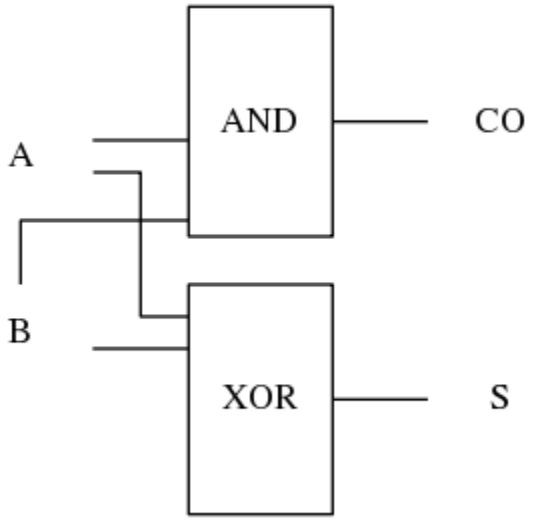

PIN CAPACITANCE (pf)

Pin	Type	Capacitance (pf)
A	input	0.0091
B	input	0.0078

DELAY AND OUTPUT TRANSITION TIME corresponding to min slew and load

Input Pin	Output	When Condition	Tin (ns)	Out Load (pf)	Delay (ns)	Tout (ns)
A(HL)	S(LH)	B	0.0100	0.0010	0.4484	0.0411
A(HL)	S(HL)	!B	0.0100	0.0010	0.2895	0.0513
A(LH)	CO(LH)	B	0.0100	0.0010	0.2503	0.0404
A(LH)	S(LH)	!B	0.0100	0.0010	0.1977	0.0386
A(HL)	CO(HL)	B	0.0100	0.0010	0.2148	0.0379
A(LH)	S(HL)	B	0.0100	0.0010	0.4639	0.0438
B(LH)	S(LH)	!A	0.0100	0.0010	0.2251	0.0402
B(LH)	CO(LH)	A	0.0100	0.0010	0.2391	0.0403
B(HL)	S(HL)	!A	0.0100	0.0010	0.3210	0.0512
B(HL)	S(LH)	A	0.0100	0.0010	0.4069	0.0399
B(HL)	CO(HL)	A	0.0100	0.0010	0.1999	0.0355
B(LH)	S(HL)	A	0.0100	0.0010	0.4515	0.0437

DYNAMIC ENERGY

Input Pin	When Condition	Tin (ns)	Output	Out Load (pf)	Energy (uW/MHz)
B	!A	0.0100	S(LH)	0.0010	0.1968
B	A	0.0100	S(LH)	0.0010	0.3481
A	B	0.0100	S(LH)	0.0010	0.3839
A	!B	0.0100	S(LH)	0.0010	0.1535
B	A	0.0100	CO(LH)	0.0010	0.3353
B	!A	0.0100	S(HL)	0.0010	0.4716
B	A	0.0100	S(HL)	0.0010	0.3443
A	!B	0.0100	S(HL)	0.0010	0.4469
A	B	0.0100	S(HL)	0.0010	0.3541
A	B	0.0100	CO(LH)	0.0010	0.3453
B	A	0.0100	CO(HL)	0.0010	0.3620
A	B	0.0100	CO(HL)	0.0010	0.3988

LEAKAGE POWER

When Condition	Power (nW)
!A&!B	0.2318
!A&B	0.3077
A&!B	0.2320
A&B	0.3171

gf180mcu_fd_sc_mcu7t5v0__addh_4

gf180mcu_fd_sc_mcu7t5v0__addh_4 symbol

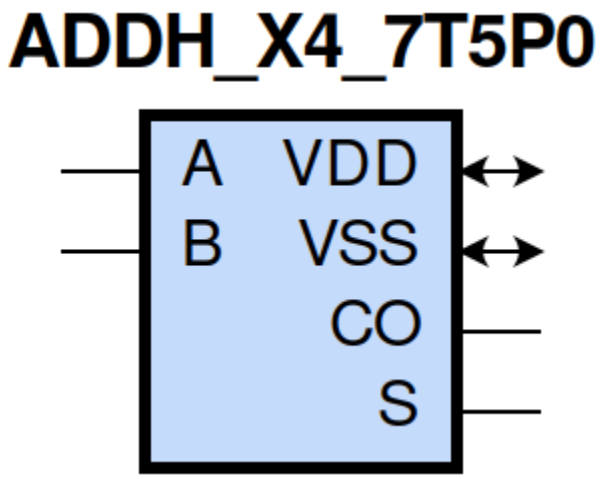

gf180mcu_fd_sc_mcu7t5v0__addh_4 schematic

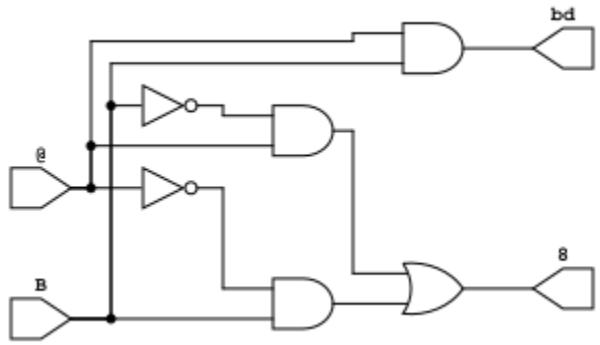

gf180mcu_fd_sc_mcu7t5v0__addh_4 layout

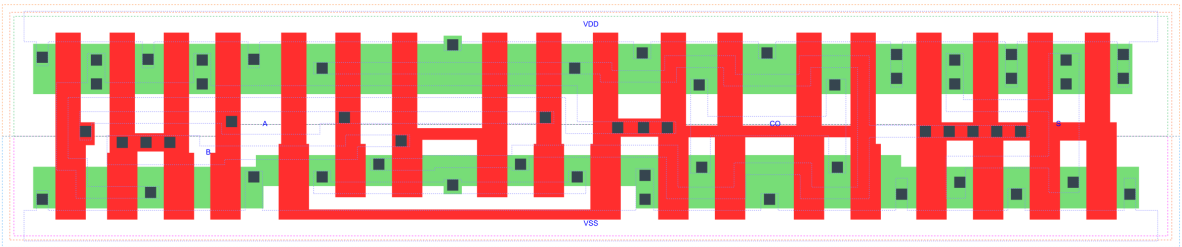

ADDH_X4 is a Half Adder, 4X drive strength

Attributes

Attribute	Value
area	87.808000 μm^2

OUTPUT FUNCTIONS

Output Pin	Function
CO	(A&B)
S	(A^B)

TRUTH TABLE FOR CO

A	B	CO
1	1	1
0	?	0
?	0	0

TRUTH TABLE FOR S

A	B	S
1	0	1
0	1	1
1	1	0
0	0	0

FUNCTIONAL SCHEMATIC

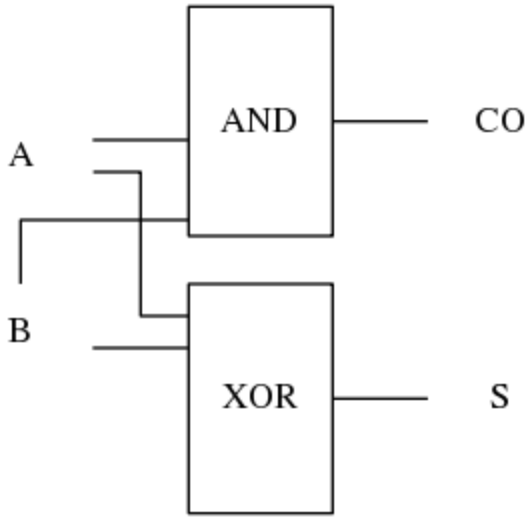

PIN CAPACITANCE (pf)

Pin	Type	Capacitance (pf)
A	input	0.0167
B	input	0.0145

DELAY AND OUTPUT TRANSITION TIME corresponding to min slew and load

Input Pin	Output	When Condition	Tin (ns)	Out Load (pf)	Delay (ns)	Tout (ns)
A(HL)	S(LH)	B	0.0100	0.0010	0.5584	0.0446
A(HL)	S(HL)	!B	0.0100	0.0010	0.2950	0.0511
A(LH)	CO(LH)	B	0.0100	0.0010	0.2572	0.0387
A(LH)	S(LH)	!B	0.0100	0.0010	0.2551	0.0421
A(HL)	CO(HL)	B	0.0100	0.0010	0.2176	0.0389
A(LH)	S(HL)	B	0.0100	0.0010	0.4432	0.0416
B(LH)	S(LH)	!A	0.0100	0.0010	0.2889	0.0438
B(LH)	CO(LH)	A	0.0100	0.0010	0.2454	0.0390
B(HL)	S(HL)	!A	0.0100	0.0010	0.3212	0.0511
B(HL)	S(LH)	A	0.0100	0.0010	0.5045	0.0432
B(HL)	CO(HL)	A	0.0100	0.0010	0.2012	0.0360
B(LH)	S(HL)	A	0.0100	0.0010	0.4303	0.0416

DYNAMIC ENERGY

Input Pin	When Condition	Tin (ns)	Output	Out Load (pf)	Energy (uW/MHz)
B	!A	0.0100	S(LH)	0.0010	0.4553
B	A	0.0100	S(LH)	0.0010	0.7356
A	B	0.0100	S(LH)	0.0010	0.8092
A	!B	0.0100	S(LH)	0.0010	0.3735
B	A	0.0100	CO(LH)	0.0010	0.6586
B	!A	0.0100	S(HL)	0.0010	1.0034
B	A	0.0100	S(HL)	0.0010	0.6810
A	!B	0.0100	S(HL)	0.0010	0.9540
A	B	0.0100	S(HL)	0.0010	0.7015
A	B	0.0100	CO(LH)	0.0010	0.6790
B	A	0.0100	CO(HL)	0.0010	0.7465
A	B	0.0100	CO(HL)	0.0010	0.8219

LEAKAGE POWER

When Condition	Power (nW)
!A&!B	0.4131
!A&B	0.5648
A&!B	0.4135
A&B	0.5846

gf180mcu_fd_sc_mcu7t5v0__and2_1

gf180mcu_fd_sc_mcu7t5v0__and2_1 symbol

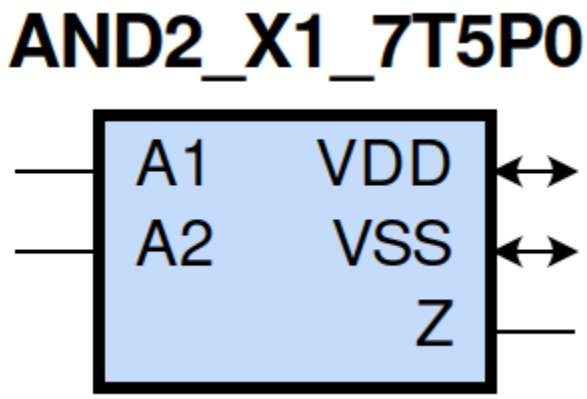

gf180mcu_fd_sc_mcu7t5v0__and2_1 schematic

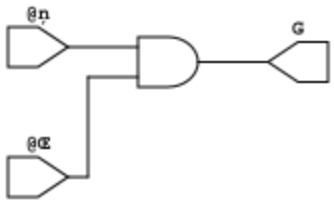

gf180mcu_fd_sc_mcu7t5v0__and2_1 layout

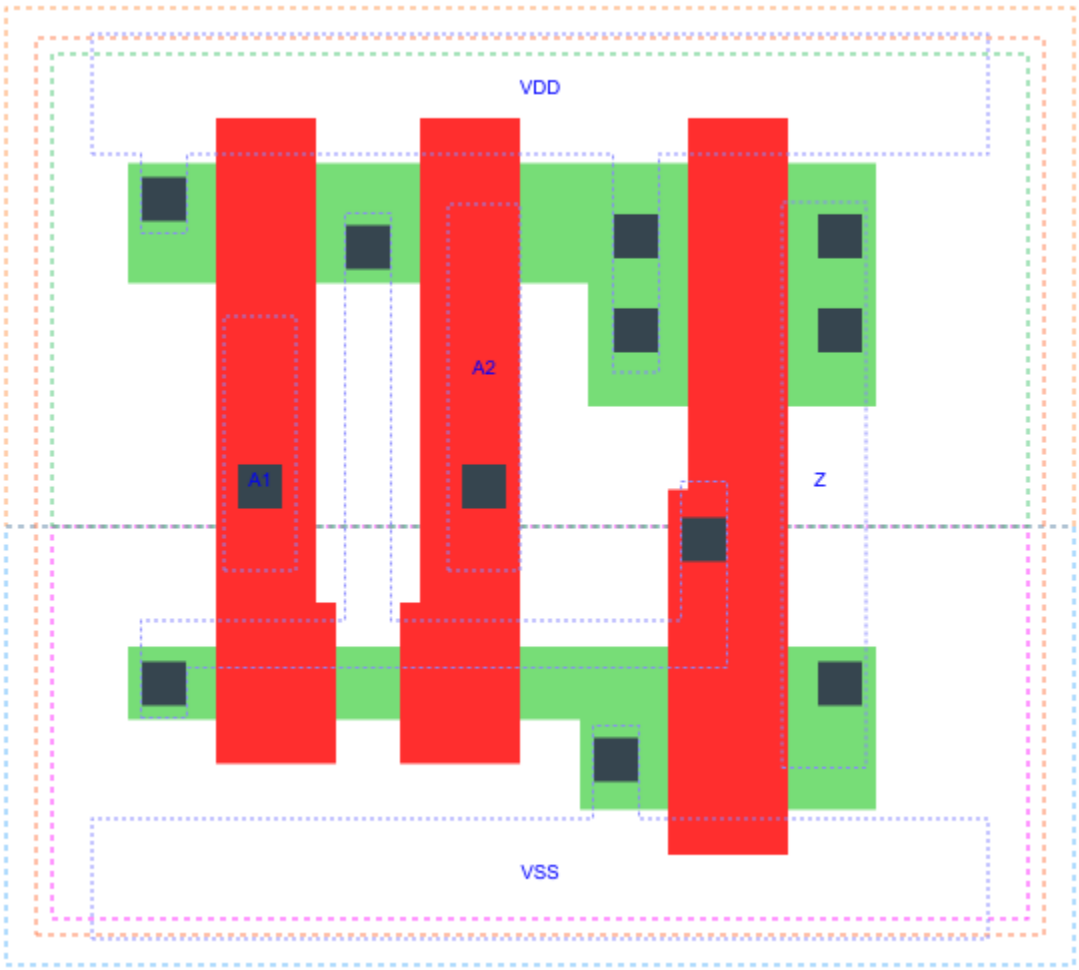

AND2_X1 is a 2-input AND, AND(A1,A2), 1X drive strength

Attributes

Attribute	Value
area	17.561600 μm^2

OUTPUT FUNCTIONS

Output Pin	Function
Z	(A1&A2)

TRUTH TABLE FOR Z

A1	A2	Z
1	1	1
0	?	0
?	0	0

FUNCTIONAL SCHEMATIC

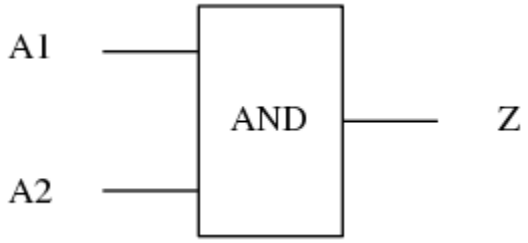

PIN CAPACITANCE (pf)

Pin	Type	Capacitance (pf)
A1	input	0.0028
A2	input	0.0028

DELAY AND OUTPUT TRANSITION TIME corresponding to min slew and load

Input Pin	Output	When Condition	Tin (ns)	Out Load (pf)	Delay (ns)	Tout (ns)
A1(LH)	Z(LH)	A2	0.0100	0.0010	0.2235	0.0480
A1(HL)	Z(HL)	A2	0.0100	0.0010	0.1877	0.0391
A2(HL)	Z(HL)	A1	0.0100	0.0010	0.2029	0.0418
A2(LH)	Z(LH)	A1	0.0100	0.0010	0.2347	0.0481

DYNAMIC ENERGY

Input Pin	When Condition	Tin (ns)	Output	Out Load (pf)	Energy (uW/MHz)
A2	A1	0.0100	Z(HL)	0.0010	0.2101
A2	A1	0.0100	Z(LH)	0.0010	0.1181
A1	A2	0.0100	Z(LH)	0.0010	0.1179
A1	A2	0.0100	Z(HL)	0.0010	0.1893
A2(LH)	!A1	0.0100	n/a	n/a	-0.0192
A1(LH)	!A2	0.0100	n/a	n/a	-0.0136
A1(HL)	!A2	0.0100	n/a	n/a	0.0214
A2(HL)	!A1	0.0100	n/a	n/a	0.0213

LEAKAGE POWER

When Condition	Power (nW)
!A1&!A2	0.1021
!A1&A2	0.1038
A1&!A2	0.1443
A1&A2	0.1277

gf180mcu_fd_sc_mcu7t5v0__and2_2

gf180mcu_fd_sc_mcu7t5v0__and2_2 symbol

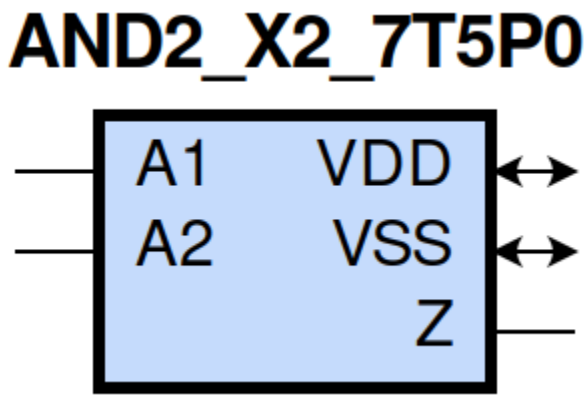

gf180mcu_fd_sc_mcu7t5v0__and2_2 schematic

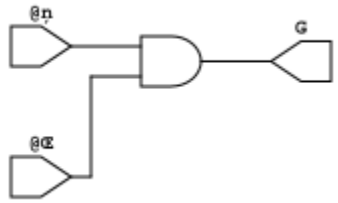

gf180mcu_fd_sc_mcu7t5v0__and2_2 layout

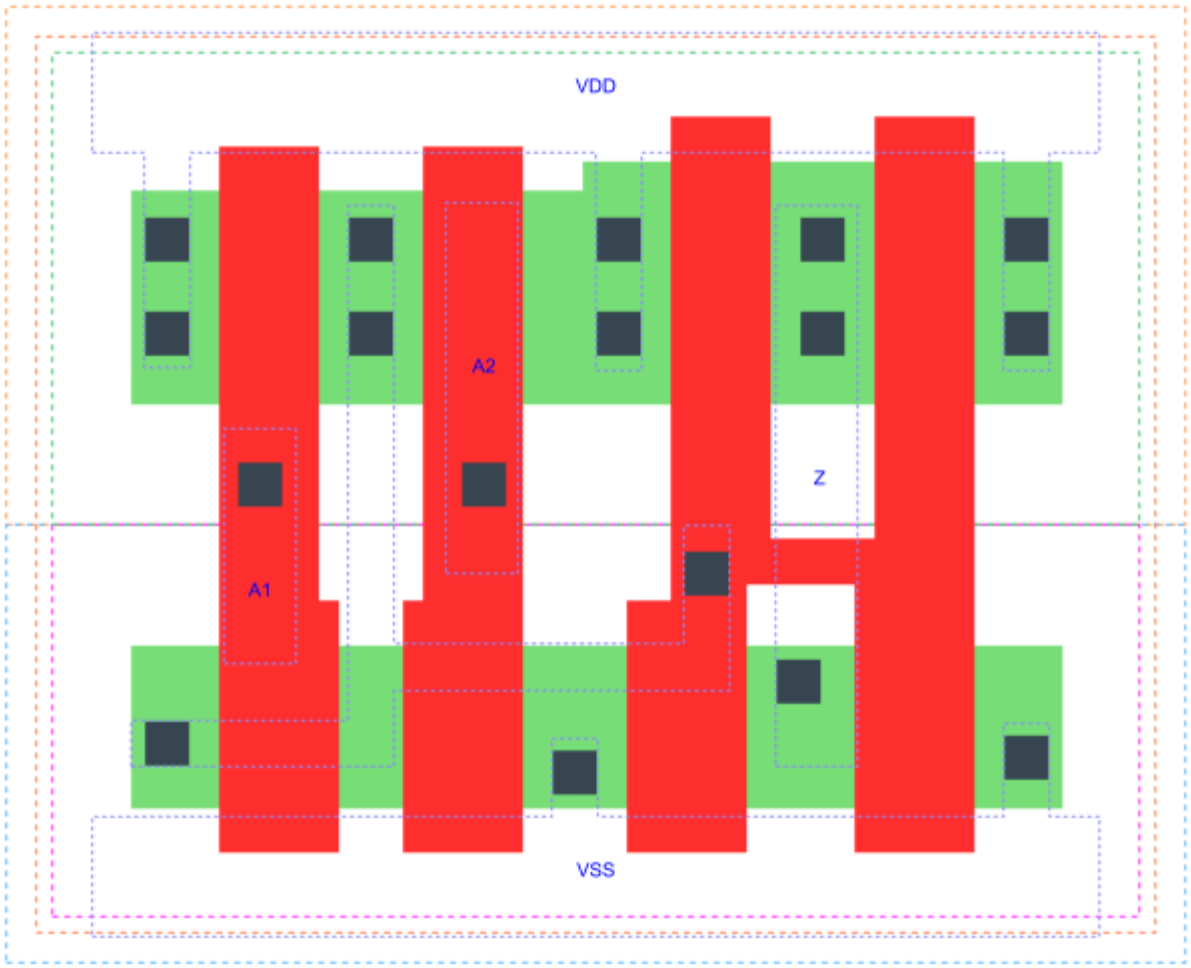

AND2_X2 is a 2-input AND, AND(A1,A2), 2X drive strength

Attributes

Attribute	Value
area	19.756800 μm^2

OUTPUT FUNCTIONS

Output Pin	Function
Z	(A1&A2)

TRUTH TABLE FOR Z

A1	A2	Z
1	1	1
0	?	0
?	0	0

FUNCTIONAL SCHEMATIC

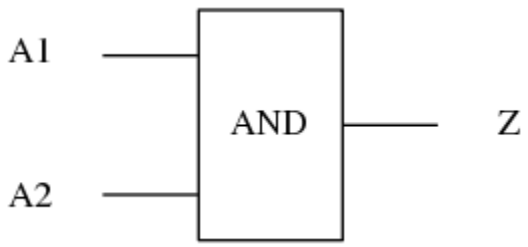

PIN CAPACITANCE (pf)

Pin	Type	Capacitance (pf)
A1	input	0.0045
A2	input	0.0045

DELAY AND OUTPUT TRANSITION TIME corresponding to min slew and load

Input Pin	Output	When Condition	Tin (ns)	Out Load (pf)	Delay (ns)	Tout (ns)
A1(LH)	Z(LH)	A2	0.0100	0.0010	0.1851	0.0345
A1(HL)	Z(HL)	A2	0.0100	0.0010	0.1733	0.0309
A2(HL)	Z(HL)	A1	0.0100	0.0010	0.1911	0.0341
A2(LH)	Z(LH)	A1	0.0100	0.0010	0.1966	0.0345

DYNAMIC ENERGY

Input Pin	When Condition	Tin (ns)	Output	Out Load (pf)	Energy (uW/MHz)
A2	A1	0.0100	Z(HL)	0.0010	0.3809
A2	A1	0.0100	Z(LH)	0.0010	0.2025
A1	A2	0.0100	Z(LH)	0.0010	0.2025
A1	A2	0.0100	Z(HL)	0.0010	0.3345
A2(LH)	!A1	0.0100	n/a	n/a	-0.0344
A1(LH)	!A2	0.0100	n/a	n/a	-0.0240
A1(HL)	!A2	0.0100	n/a	n/a	0.0390
A2(HL)	!A1	0.0100	n/a	n/a	0.0388

LEAKAGE POWER

When Condition	Power (nW)
!A1&!A2	0.1282
!A1&A2	0.1284
A1&!A2	0.1683
A1&A2	0.1537

gf180mcu_fd_sc_mcu7t5v0__and2_4

gf180mcu_fd_sc_mcu7t5v0__and2_4 symbol

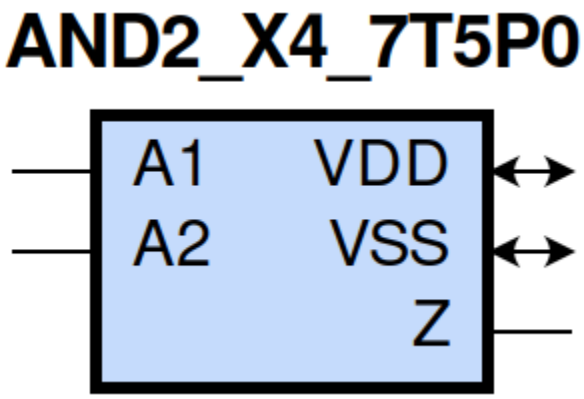

gf180mcu_fd_sc_mcu7t5v0__and2_4 schematic

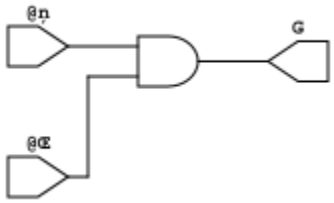

gf180mcu_fd_sc_mcu7t5v0__and2_4 layout

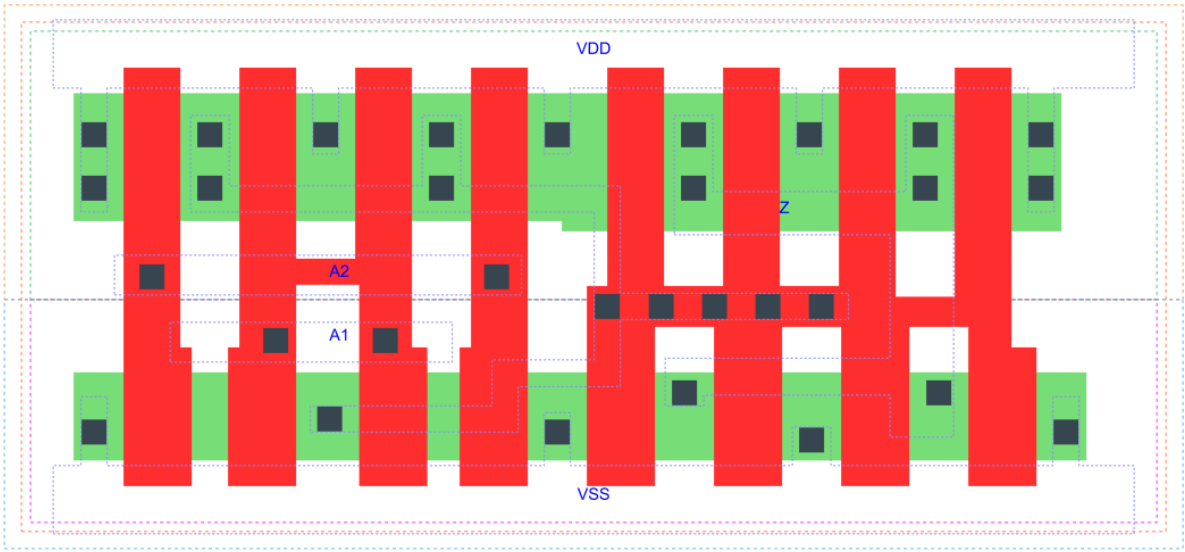

AND2_X4 is a 2-input AND, AND(A1,A2), 4X drive strength

Attributes

Attribute	Value
area	37.318400 μm^2

OUTPUT FUNCTIONS

Output Pin	Function
Z	(A1&A2)

TRUTH TABLE FOR Z

A1	A2	Z
1	1	1
0	?	0
?	0	0

FUNCTIONAL SCHEMATIC

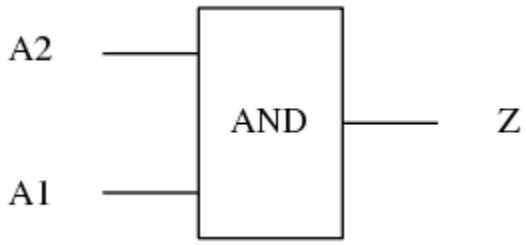

PIN CAPACITANCE (pf)

Pin	Type	Capacitance (pf)
A2	input	0.0093
A1	input	0.0089

DELAY AND OUTPUT TRANSITION TIME corresponding to min slew and load

Input Pin	Output	When Condition	Tin (ns)	Out Load (pf)	Delay (ns)	Tout (ns)
A2(HL)	Z(HL)	A1	0.0100	0.0010	0.1754	0.0307
A2(LH)	Z(LH)	A1	0.0100	0.0010	0.1916	0.0327
A1(LH)	Z(LH)	A2	0.0100	0.0010	0.1803	0.0327
A1(HL)	Z(HL)	A2	0.0100	0.0010	0.1593	0.0281

DYNAMIC ENERGY

Input Pin	When Condition	Tin (ns)	Output	Out Load (pf)	Energy (uW/MHz)
A2	A1	0.0100	Z(HL)	0.0010	0.7055
A2	A1	0.0100	Z(LH)	0.0010	0.4051
A1	A2	0.0100	Z(LH)	0.0010	0.4054
A1	A2	0.0100	Z(HL)	0.0010	0.6198
A2(LH)	!A1	0.0100	n/a	n/a	-0.0724
A1(LH)	!A2	0.0100	n/a	n/a	-0.0532
A1(HL)	!A2	0.0100	n/a	n/a	0.0813
A2(HL)	!A1	0.0100	n/a	n/a	0.0806

LEAKAGE POWER

When Condition	Power (nW)
!A1&!A2	0.2064
!A1&A2	0.2068
A1&!A2	0.2867
A1&A2	0.2575

gf180mcu_fd_sc_mcu7t5v0__and3_1

gf180mcu_fd_sc_mcu7t5v0__and3_1 symbol

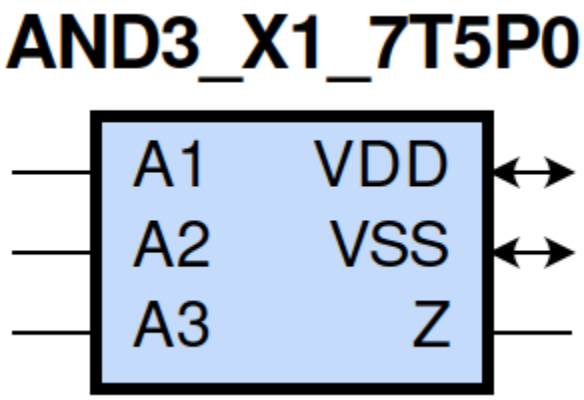

gf180mcu_fd_sc_mcu7t5v0__and3_1 schematic

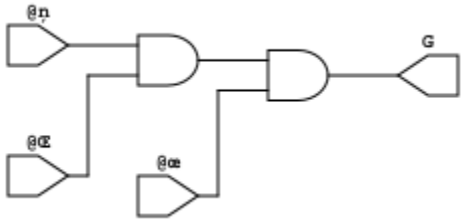

gf180mcu_fd_sc_mcu7t5v0__and3_1 layout

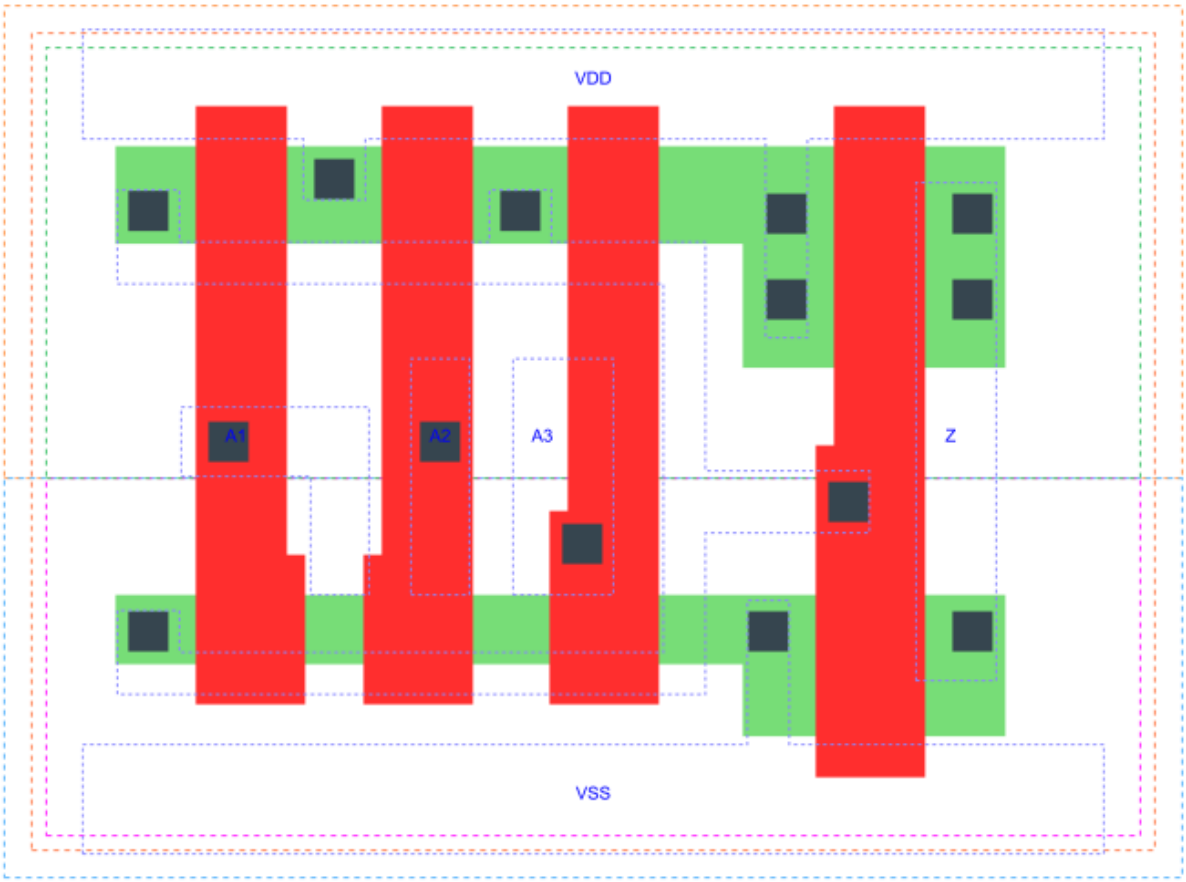

AND3_X1 is a 3-input AND, AND(A1,A2,A3), 1X drive strength

Attributes

Attribute	Value
area	21.952000 μm^2

OUTPUT FUNCTIONS

Output Pin	Function
Z	(A1&A2&A3)

TRUTH TABLE FOR Z

A1	A2	A3	Z
1	1	1	1
0	?	?	0
?	0	?	0
?	?	0	0

FUNCTIONAL SCHEMATIC

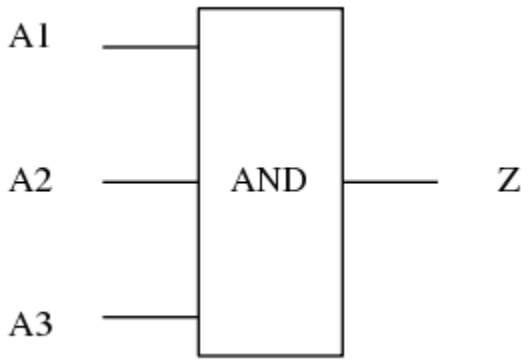

PIN CAPACITANCE (pf)

Pin	Type	Capacitance (pf)
A1	input	0.0028
A2	input	0.0027
A3	input	0.0028

DELAY AND OUTPUT TRANSITION TIME corresponding to min slew and load

Input Pin	Output	When Condition	Tin (ns)	Out Load (pf)	Delay (ns)	Tout (ns)
A1(LH)	Z(LH)	A2&A3	0.0100	0.0010	0.3115	0.0597
A1(HL)	Z(HL)	A2&A3	0.0100	0.0010	0.2343	0.0462
A2(HL)	Z(HL)	A1&A3	0.0100	0.0010	0.2540	0.0493
A2(LH)	Z(LH)	A1&A3	0.0100	0.0010	0.3312	0.0600
A3(LH)	Z(LH)	A1&A2	0.0100	0.0010	0.3427	0.0598
A3(HL)	Z(HL)	A1&A2	0.0100	0.0010	0.2714	0.0525

DYNAMIC ENERGY

Input Pin	When Condition	Tin (ns)	Output	Out Load (pf)	Energy (uW/MHz)
A3	A1&A2	0.0100	Z(LH)	0.0010	0.1503
A2	A1&A3	0.0100	Z(HL)	0.0010	0.2459
A2	A1&A3	0.0100	Z(LH)	0.0010	0.1502
A1	A2&A3	0.0100	Z(LH)	0.0010	0.1503
A3	A1&A2	0.0100	Z(HL)	0.0010	0.2702
A1	A2&A3	0.0100	Z(HL)	0.0010	0.2221
A3(LH)	!A1&!A2	0.0100	n/a	n/a	-0.0172
A3(LH)	!A1&A2	0.0100	n/a	n/a	-0.0172
A3(LH)	A1&!A2	0.0100	n/a	n/a	-0.0172
A2(LH)	!A1&!A3	0.0100	n/a	n/a	-0.0173
A2(LH)	!A1&A3	0.0100	n/a	n/a	-0.0172
A2(LH)	A1&!A3	0.0100	n/a	n/a	-0.0114
A1(LH)	!A2&!A3	0.0100	n/a	n/a	-0.0114
A1(LH)	!A2&A3	0.0100	n/a	n/a	-0.0114
A1(LH)	A2&!A3	0.0100	n/a	n/a	0.0093
A3(HL)	!A1&!A2	0.0100	n/a	n/a	0.0174
A3(HL)	!A1&A2	0.0100	n/a	n/a	0.0192
A3(HL)	A1&!A2	0.0100	n/a	n/a	0.0187
A1(HL)	!A2&!A3	0.0100	n/a	n/a	0.0194
A1(HL)	!A2&A3	0.0100	n/a	n/a	0.0194
A1(HL)	A2&!A3	0.0100	n/a	n/a	0.0193
A2(HL)	!A1&!A3	0.0100	n/a	n/a	0.0234
A2(HL)	!A1&A3	0.0100	n/a	n/a	0.0206
A2(HL)	A1&!A3	0.0100	n/a	n/a	0.0192

LEAKAGE POWER

When Condition	Power (nW)
!A1&!A2&!A3	0.1020
!A1&!A2&A3	0.1020
!A1&A2&!A3	0.1022
!A1&A2&A3	0.1033
A1&!A2&!A3	0.1426
A1&!A2&A3	0.1436
A1&A2&!A3	0.1834
A1&A2&A3	0.1537

gf180mcu_fd_sc_mcu7t5v0__and3_2

gf180mcu_fd_sc_mcu7t5v0__and3_2 symbol

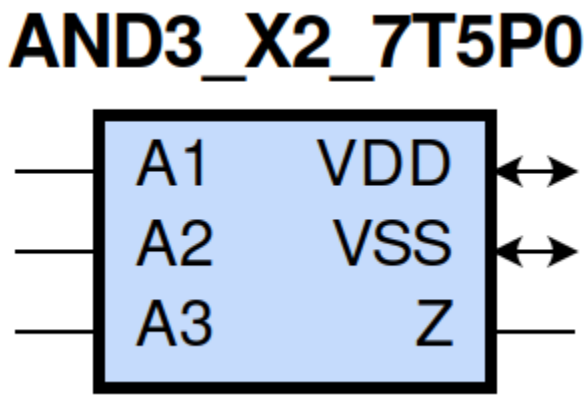

gf180mcu_fd_sc_mcu7t5v0__and3_2 schematic

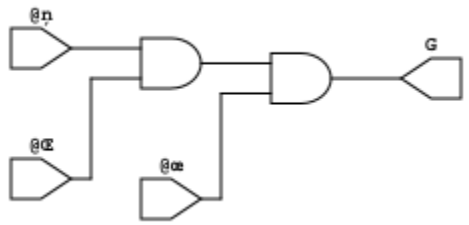

gf180mcu_fd_sc_mcu7t5v0__and3_2 layout

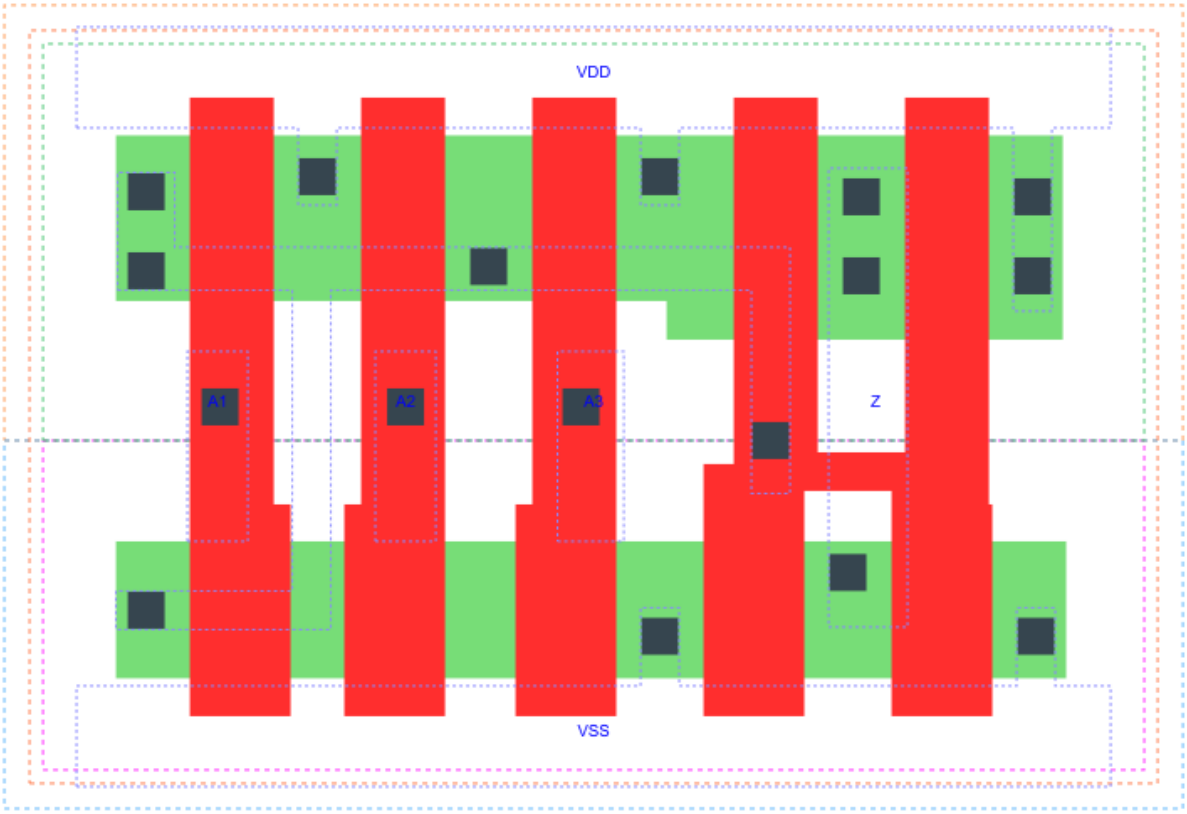

AND3_X2 is a 3-input AND, AND(A1,A2,A3), 2X drive strength

Attributes

Attribute	Value
area	24.147200 μm^2

OUTPUT FUNCTIONS

Output Pin	Function
Z	(A1&A2&A3)

TRUTH TABLE FOR Z

A1	A2	A3	Z
1	1	1	1
0	?	?	0
?	0	?	0
?	?	0	0

FUNCTIONAL SCHEMATIC

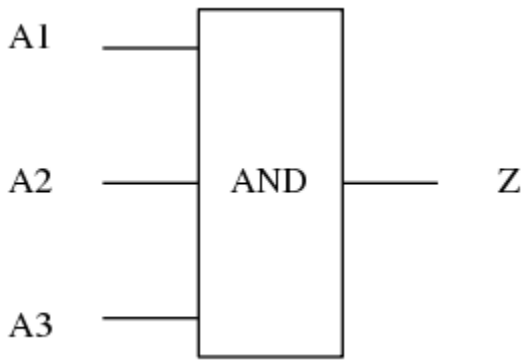

PIN CAPACITANCE (pf)

Pin	Type	Capacitance (pf)
A1	input	0.0044
A2	input	0.0042
A3	input	0.0042

DELAY AND OUTPUT TRANSITION TIME corresponding to min slew and load

Input Pin	Output	When Condition	Tin (ns)	Out Load (pf)	Delay (ns)	Tout (ns)
A1(LH)	Z(LH)	A2&A3	0.0100	0.0010	0.2481	0.0432
A1(HL)	Z(HL)	A2&A3	0.0100	0.0010	0.1972	0.0345
A2(HL)	Z(HL)	A1&A3	0.0100	0.0010	0.2190	0.0380
A2(LH)	Z(LH)	A1&A3	0.0100	0.0010	0.2684	0.0433
A3(LH)	Z(LH)	A1&A2	0.0100	0.0010	0.2797	0.0433
A3(HL)	Z(HL)	A1&A2	0.0100	0.0010	0.2376	0.0410

DYNAMIC ENERGY

Input Pin	When Condition	Tin (ns)	Output	Out Load (pf)	Energy (uW/MHz)
A3	A1&A2	0.0100	Z(LH)	0.0010	0.2584
A2	A1&A3	0.0100	Z(HL)	0.0010	0.4086
A2	A1&A3	0.0100	Z(LH)	0.0010	0.2584
A1	A2&A3	0.0100	Z(LH)	0.0010	0.2586
A3	A1&A2	0.0100	Z(HL)	0.0010	0.4583
A1	A2&A3	0.0100	Z(HL)	0.0010	0.3572
A3(LH)	!A1&!A2	0.0100	n/a	n/a	-0.0316
A3(LH)	!A1&A2	0.0100	n/a	n/a	-0.0316
A3(LH)	A1&!A2	0.0100	n/a	n/a	-0.0316
A2(LH)	!A1&!A3	0.0100	n/a	n/a	-0.0317
A2(LH)	!A1&A3	0.0100	n/a	n/a	-0.0316
A2(LH)	A1&!A3	0.0100	n/a	n/a	-0.0220
A1(LH)	!A2&!A3	0.0100	n/a	n/a	-0.0209
A1(LH)	!A2&A3	0.0100	n/a	n/a	-0.0209
A1(LH)	A2&!A3	0.0100	n/a	n/a	0.0205
A3(HL)	!A1&!A2	0.0100	n/a	n/a	0.0319
A3(HL)	!A1&A2	0.0100	n/a	n/a	0.0352
A3(HL)	A1&!A2	0.0100	n/a	n/a	0.0346
A1(HL)	!A2&!A3	0.0100	n/a	n/a	0.0363
A1(HL)	!A2&A3	0.0100	n/a	n/a	0.0362
A1(HL)	A2&!A3	0.0100	n/a	n/a	0.0361
A2(HL)	!A1&!A3	0.0100	n/a	n/a	0.0442
A2(HL)	!A1&A3	0.0100	n/a	n/a	0.0386
A2(HL)	A1&!A3	0.0100	n/a	n/a	0.0359

LEAKAGE POWER

When Condition	Power (nW)
!A1&!A2&!A3	0.1282
!A1&!A2&A3	0.1282
!A1&A2&!A3	0.1283
!A1&A2&A3	0.1284
A1&!A2&!A3	0.1682
A1&!A2&A3	0.1683
A1&A2&!A3	0.2075
A1&A2&A3	0.1800

gf180mcu_fd_sc_mcu7t5v0__and3_4

gf180mcu_fd_sc_mcu7t5v0__and3_4 symbol

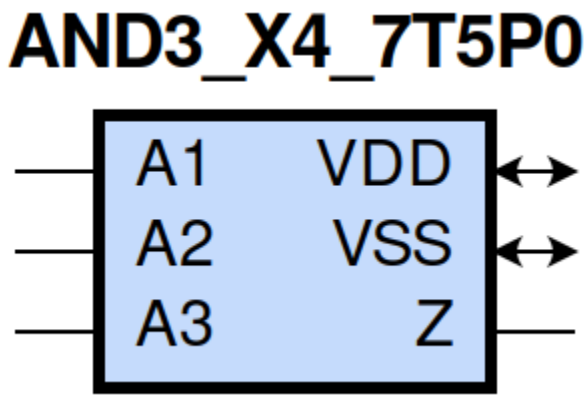

gf180mcu_fd_sc_mcu7t5v0__and3_4 schematic

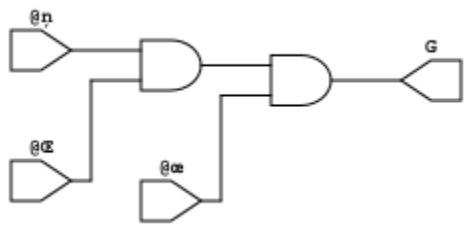

gf180mcu_fd_sc_mcu7t5v0__and3_4 layout

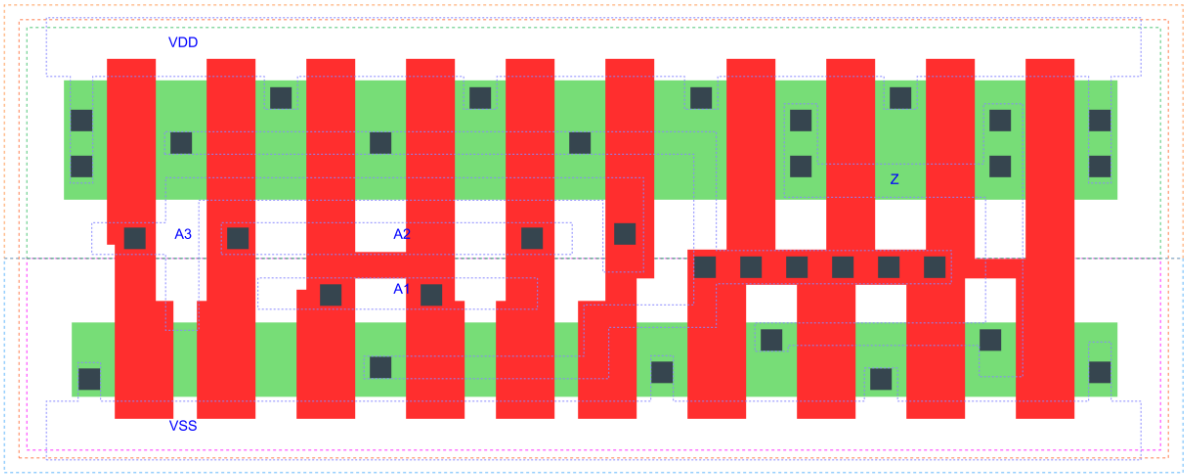

AND3_X4 is a 3-input AND, AND(A1,A2,A3), 4X drive strength

Attributes

Attribute	Value
area	43.904000 μm^2

OUTPUT FUNCTIONS

Output Pin	Function
Z	(A1&A2&A3)

TRUTH TABLE FOR Z

A1	A2	A3	Z
1	1	1	1
0	?	?	0
?	0	?	0
?	?	0	0

FUNCTIONAL SCHEMATIC

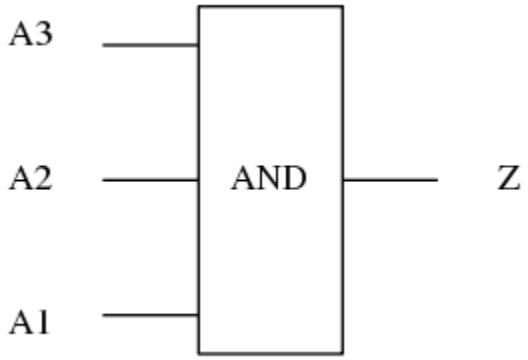

PIN CAPACITANCE (pf)

Pin	Type	Capacitance (pf)
A3	input	0.0103
A2	input	0.0096
A1	input	0.0092

DELAY AND OUTPUT TRANSITION TIME corresponding to min slew and load

Input Pin	Output	When Condition	Tin (ns)	Out Load (pf)	Delay (ns)	Tout (ns)
A3(LH)	Z(LH)	A1&A2	0.0100	0.0010	0.2786	0.0415
A3(HL)	Z(HL)	A1&A2	0.0100	0.0010	0.1905	0.0328
A2(HL)	Z(HL)	A1&A3	0.0100	0.0010	0.1780	0.0307
A2(LH)	Z(LH)	A1&A3	0.0100	0.0010	0.2684	0.0414
A1(LH)	Z(LH)	A2&A3	0.0100	0.0010	0.2477	0.0414
A1(HL)	Z(HL)	A2&A3	0.0100	0.0010	0.1608	0.0282

DYNAMIC ENERGY

Input Pin	When Condition	Tin (ns)	Output	Out Load (pf)	Energy (uW/MHz)
A3	A1&A2	0.0100	Z(LH)	0.0010	0.5059
A2	A1&A3	0.0100	Z(HL)	0.0010	0.7445
A2	A1&A3	0.0100	Z(LH)	0.0010	0.5059
A1	A2&A3	0.0100	Z(LH)	0.0010	0.5055
A3	A1&A2	0.0100	Z(HL)	0.0010	0.8250
A1	A2&A3	0.0100	Z(HL)	0.0010	0.6537
A3(LH)	!A1&!A2	0.0100	n/a	n/a	-0.0786
A3(LH)	!A1&A2	0.0100	n/a	n/a	-0.0785
A3(LH)	A1&!A2	0.0100	n/a	n/a	-0.0785
A2(LH)	!A1&!A3	0.0100	n/a	n/a	-0.0787
A2(LH)	!A1&A3	0.0100	n/a	n/a	-0.0785
A2(LH)	A1&!A3	0.0100	n/a	n/a	-0.0655
A1(LH)	!A2&!A3	0.0100	n/a	n/a	-0.0575
A1(LH)	!A2&A3	0.0100	n/a	n/a	-0.0575
A1(LH)	A2&!A3	0.0100	n/a	n/a	0.0150
A3(HL)	!A1&!A2	0.0100	n/a	n/a	0.0790
A3(HL)	!A1&A2	0.0100	n/a	n/a	0.0855
A3(HL)	A1&!A2	0.0100	n/a	n/a	0.0839
A1(HL)	!A2&!A3	0.0100	n/a	n/a	0.0873
A1(HL)	!A2&A3	0.0100	n/a	n/a	0.0873
A1(HL)	A2&!A3	0.0100	n/a	n/a	0.0871
A2(HL)	!A1&!A3	0.0100	n/a	n/a	0.1023
A2(HL)	!A1&A3	0.0100	n/a	n/a	0.0919
A2(HL)	A1&!A3	0.0100	n/a	n/a	0.0866

LEAKAGE POWER

When Condition	Power (nW)
!A1&!A2&!A3	0.2064
!A1&!A2&A3	0.2064
!A1&A2&!A3	0.2065
!A1&A2&A3	0.2069
A1&!A2&!A3	0.2864
A1&!A2&A3	0.2867
A1&A2&!A3	0.3651
A1&A2&A3	0.3107

gf180mcu_fd_sc_mcu7t5v0__and4_1

gf180mcu_fd_sc_mcu7t5v0__and4_1 symbol

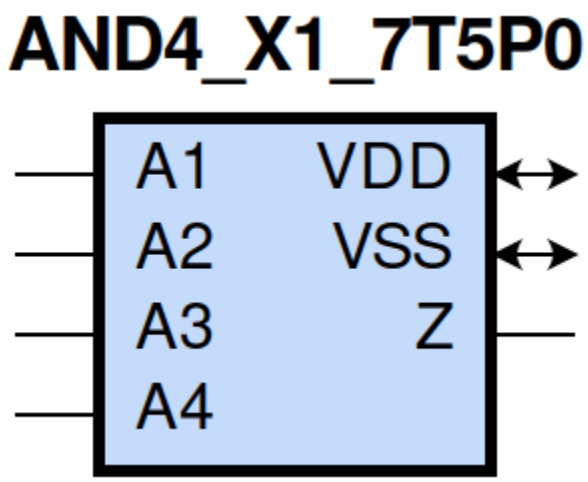

gf180mcu_fd_sc_mcu7t5v0__and4_1 schematic

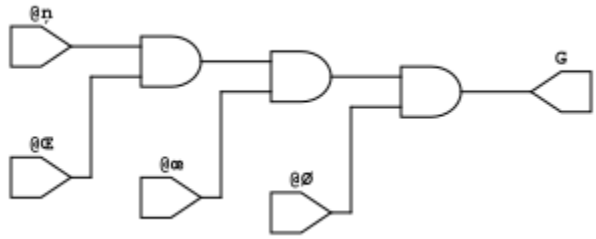

gf180mcu_fd_sc_mcu7t5v0__and4_1 layout

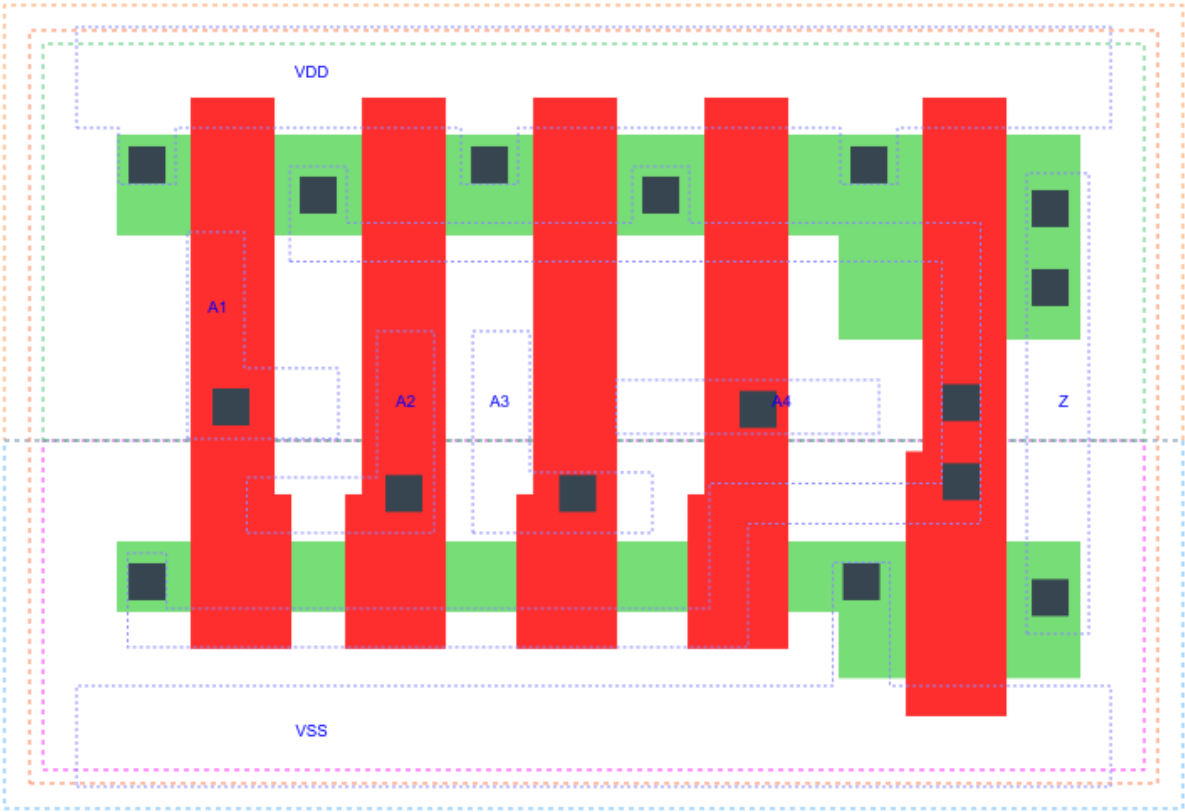

AND4_X1 is a 4-input AND, AND(A1,A2,A3,A4), 1X drive strength

Attributes

Attribute	Value
area	24.147200 μm^2

OUTPUT FUNCTIONS

Output Pin	Function
Z	(A1&A2&A3&A4)

TRUTH TABLE FOR Z

A1	A2	A3	A4	Z
1	1	1	1	1
0	?	?	?	0
?	0	?	?	0
?	?	0	?	0
?	?	?	0	0

FUNCTIONAL SCHEMATIC

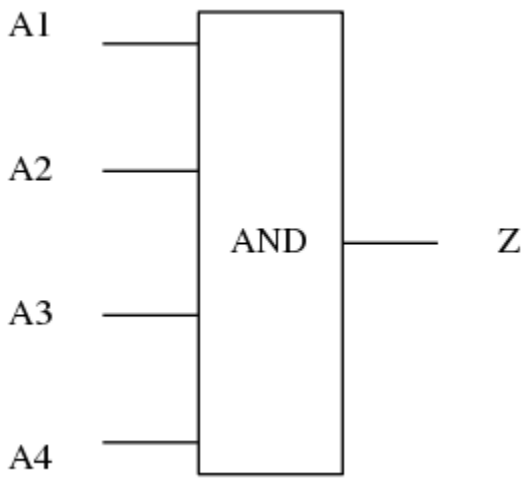

PIN CAPACITANCE (pf)

Pin	Type	Capacitance (pf)
A1	input	0.0030
A2	input	0.0030
A3	input	0.0030
A4	input	0.0029

DELAY AND OUTPUT TRANSITION TIME corresponding to min slew and load

Input Pin	Output	When Condition	Tin (ns)	Out Load (pf)	Delay (ns)	Tout (ns)
A1(LH)	Z(LH)	A2&A3&A4	0.0100	0.0010	0.3804	0.0698
A1(HL)	Z(HL)	A2&A3&A4	0.0100	0.0010	0.2297	0.0452
A2(HL)	Z(HL)	A1&A3&A4	0.0100	0.0010	0.2495	0.0487
A2(LH)	Z(LH)	A1&A3&A4	0.0100	0.0010	0.4096	0.0693
A3(LH)	Z(LH)	A1&A2&A4	0.0100	0.0010	0.4298	0.0696
A3(HL)	Z(HL)	A1&A2&A4	0.0100	0.0010	0.2684	0.0515
A4(LH)	Z(LH)	A1&A2&A3	0.0100	0.0010	0.4409	0.0698
A4(HL)	Z(HL)	A1&A2&A3	0.0100	0.0010	0.2827	0.0547

DYNAMIC ENERGY

Input Pin	When Condition	Tin (ns)	Output	Out Load (pf)	Energy (uW/MHz)
A3	A1&A2&A4	0.0100	Z(LH)	0.0010	0.1784
A2	A1&A3&A4	0.0100	Z(HL)	0.0010	0.2663
A2	A1&A3&A4	0.0100	Z(LH)	0.0010	0.1783
A4	A1&A2&A3	0.0100	Z(LH)	0.0010	0.1783
A1	A2&A3&A4	0.0100	Z(LH)	0.0010	0.1783
A3	A1&A2&A4	0.0100	Z(HL)	0.0010	0.2935
A4	A1&A2&A3	0.0100	Z(HL)	0.0010	0.3193
A1	A2&A3&A4	0.0100	Z(HL)	0.0010	0.2399
A3(LH)	!A1&!A2&!A4	0.0100	n/a	n/a	-0.0193
A3(LH)	!A1&!A2&A4	0.0100	n/a	n/a	-0.0192
A3(LH)	!A1&A2&!A4	0.0100	n/a	n/a	-0.0192
A3(LH)	!A1&A2&A4	0.0100	n/a	n/a	-0.0192
A3(LH)	A1&!A2&!A4	0.0100	n/a	n/a	-0.0193
A3(LH)	A1&!A2&A4	0.0100	n/a	n/a	-0.0192
A3(LH)	A1&A2&!A4	0.0100	n/a	n/a	-0.0139
A2(LH)	!A1&!A3&!A4	0.0100	n/a	n/a	-0.0193
A2(LH)	!A1&!A3&A4	0.0100	n/a	n/a	-0.0193
A2(LH)	!A1&A3&!A4	0.0100	n/a	n/a	-0.0192
A2(LH)	!A1&A3&A4	0.0100	n/a	n/a	-0.0192
A2(LH)	A1&!A3&!A4	0.0100	n/a	n/a	-0.0131
A2(LH)	A1&!A3&A4	0.0100	n/a	n/a	-0.0131
A2(LH)	A1&A3&!A4	0.0100	n/a	n/a	0.0093
A1(LH)	!A2&!A3&!A4	0.0100	n/a	n/a	-0.0129
A1(LH)	!A2&!A3&A4	0.0100	n/a	n/a	-0.0129
A1(LH)	!A2&A3&!A4	0.0100	n/a	n/a	-0.0129
A1(LH)	!A2&A3&A4	0.0100	n/a	n/a	-0.0129
A1(LH)	A2&!A3&!A4	0.0100	n/a	n/a	0.0097
A1(LH)	A2&!A3&A4	0.0100	n/a	n/a	0.0097
A1(LH)	A2&A3&!A4	0.0100	n/a	n/a	0.0321
A3(HL)	!A1&!A2&!A4	0.0100	n/a	n/a	0.0223
A3(HL)	!A1&!A2&A4	0.0100	n/a	n/a	0.0202
A3(HL)	!A1&A2&!A4	0.0100	n/a	n/a	0.0271
A3(HL)	!A1&A2&A4	0.0100	n/a	n/a	0.0230
A3(HL)	A1&!A2&!A4	0.0100	n/a	n/a	0.0246

continues on next page

Table 7 – continued from previous page

A3(HL)	A1&!A2&A4	0.0100	n/a	n/a	0.0221
A3(HL)	A1&A2&!A4	0.0100	n/a	n/a	0.0209
A4(LH)	!A1&!A2&!A3	0.0100	n/a	n/a	-0.0193
A4(LH)	!A1&!A2&A3	0.0100	n/a	n/a	-0.0192
A4(LH)	!A1&A2&!A3	0.0100	n/a	n/a	-0.0193
A4(LH)	!A1&A2&A3	0.0100	n/a	n/a	-0.0192
A4(LH)	A1&!A2&!A3	0.0100	n/a	n/a	-0.0193
A4(LH)	A1&!A2&A3	0.0100	n/a	n/a	-0.0192
A4(LH)	A1&A2&!A3	0.0100	n/a	n/a	-0.0193
A1(HL)	!A2&!A3&!A4	0.0100	n/a	n/a	0.0217
A1(HL)	!A2&!A3&A4	0.0100	n/a	n/a	0.0217
A1(HL)	!A2&A3&!A4	0.0100	n/a	n/a	0.0217
A1(HL)	!A2&A3&A4	0.0100	n/a	n/a	0.0217
A1(HL)	A2&!A3&!A4	0.0100	n/a	n/a	0.0216
A1(HL)	A2&!A3&A4	0.0100	n/a	n/a	0.0216
A1(HL)	A2&A3&!A4	0.0100	n/a	n/a	0.0216
A2(HL)	!A1&!A3&!A4	0.0100	n/a	n/a	0.0266
A2(HL)	!A1&!A3&A4	0.0100	n/a	n/a	0.0260
A2(HL)	!A1&A3&!A4	0.0100	n/a	n/a	0.0263
A2(HL)	!A1&A3&A4	0.0100	n/a	n/a	0.0233
A2(HL)	A1&!A3&!A4	0.0100	n/a	n/a	0.0214
A2(HL)	A1&!A3&A4	0.0100	n/a	n/a	0.0214
A2(HL)	A1&A3&!A4	0.0100	n/a	n/a	0.0214
A4(HL)	!A1&!A2&!A3	0.0100	n/a	n/a	0.0194
A4(HL)	!A1&!A2&A3	0.0100	n/a	n/a	0.0194
A4(HL)	!A1&A2&!A3	0.0100	n/a	n/a	0.0193
A4(HL)	!A1&A2&A3	0.0100	n/a	n/a	0.0198
A4(HL)	A1&!A2&!A3	0.0100	n/a	n/a	0.0193
A4(HL)	A1&!A2&A3	0.0100	n/a	n/a	0.0206
A4(HL)	A1&A2&!A3	0.0100	n/a	n/a	0.0204

LEAKAGE POWER

When Condition	Power (nW)
!A1&!A2&!A3&!A4	0.1019
!A1&!A2&!A3&A4	0.1019
!A1&!A2&A3&!A4	0.1019
!A1&!A2&A3&A4	0.1019
!A1&A2&!A3&!A4	0.1020
!A1&A2&!A3&A4	0.1020
!A1&A2&A3&!A4	0.1021
!A1&A2&A3&A4	0.1026
A1&!A2&!A3&!A4	0.1423
A1&!A2&!A3&A4	0.1423
A1&!A2&A3&!A4	0.1424
A1&!A2&A3&A4	0.1429
A1&A2&!A3&!A4	0.1820
A1&A2&!A3&A4	0.1825
A1&A2&A3&!A4	0.2218
A1&A2&A3&A4	0.1799

gf180mcu_fd_sc_mcu7t5v0__and4_2

gf180mcu_fd_sc_mcu7t5v0__and4_2 symbol

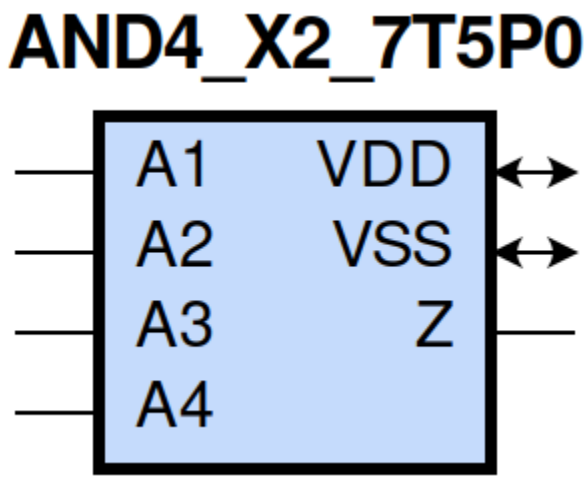

gf180mcu_fd_sc_mcu7t5v0__and4_2 schematic

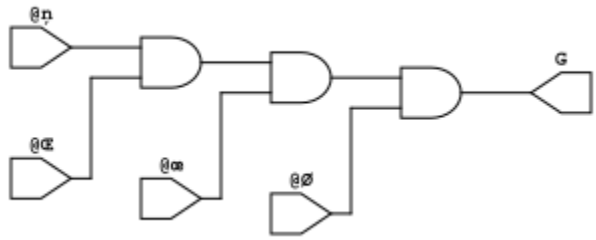

gf180mcu_fd_sc_mcu7t5v0__and4_2 layout

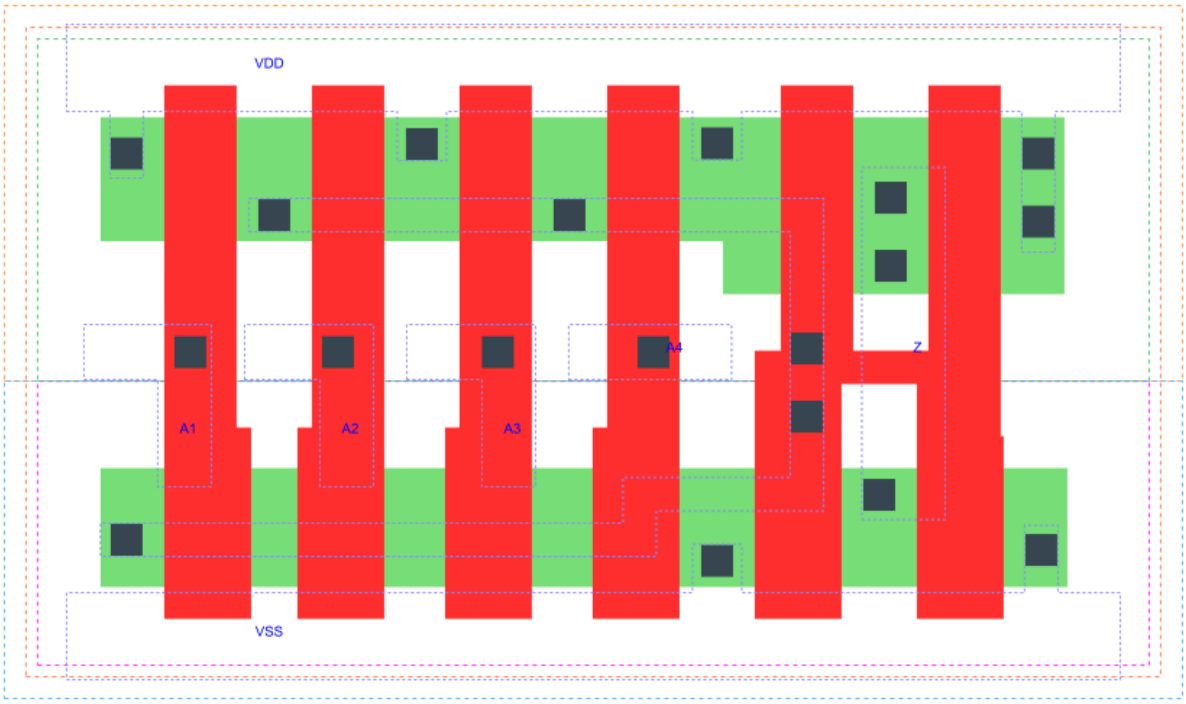

AND4_X2 is a 4-input AND, AND(A1,A2,A3,A4), 2X drive strength

Attributes

Attribute	Value
area	28.537600 μm^2

OUTPUT FUNCTIONS

Output Pin	Function
Z	(A1&A2&A3&A4)

TRUTH TABLE FOR Z

A1	A2	A3	A4	Z
1	1	1	1	1
0	?	?	?	0
?	0	?	?	0
?	?	0	?	0
?	?	?	0	0

FUNCTIONAL SCHEMATIC

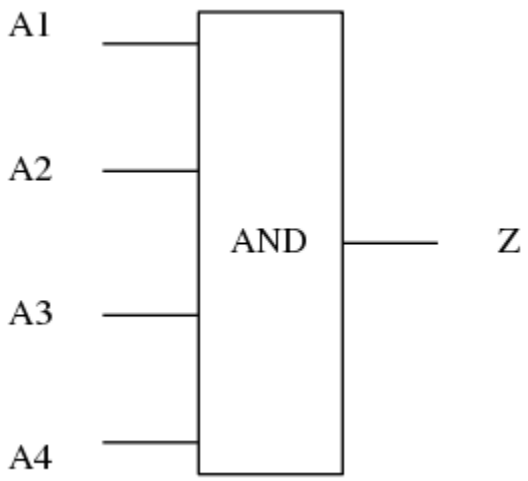

PIN CAPACITANCE (pf)

Pin	Type	Capacitance (pf)
A1	input	0.0042
A2	input	0.0041
A3	input	0.0041
A4	input	0.0040

DELAY AND OUTPUT TRANSITION TIME corresponding to min slew and load

Input Pin	Output	When Condition	Tin (ns)	Out Load (pf)	Delay (ns)	Tout (ns)
A1(LH)	Z(LH)	A2&A3&A4	0.0100	0.0010	0.3020	0.0514
A1(HL)	Z(HL)	A2&A3&A4	0.0100	0.0010	0.2278	0.0391
A2(HL)	Z(HL)	A1&A3&A4	0.0100	0.0010	0.2534	0.0428
A2(LH)	Z(LH)	A1&A3&A4	0.0100	0.0010	0.3310	0.0515
A3(LH)	Z(LH)	A1&A2&A4	0.0100	0.0010	0.3510	0.0517
A3(HL)	Z(HL)	A1&A2&A4	0.0100	0.0010	0.2782	0.0462
A4(LH)	Z(LH)	A1&A2&A3	0.0100	0.0010	0.3624	0.0513
A4(HL)	Z(HL)	A1&A2&A3	0.0100	0.0010	0.2970	0.0496

DYNAMIC ENERGY

Input Pin	When Condition	Tin (ns)	Output	Out Load (pf)	Energy (uW/MHz)
A3	A1&A2&A4	0.0100	Z(LH)	0.0010	0.3015
A2	A1&A3&A4	0.0100	Z(HL)	0.0010	0.4432
A2	A1&A3&A4	0.0100	Z(LH)	0.0010	0.3014
A4	A1&A2&A3	0.0100	Z(LH)	0.0010	0.3017
A1	A2&A3&A4	0.0100	Z(LH)	0.0010	0.3015
A3	A1&A2&A4	0.0100	Z(HL)	0.0010	0.4988
A4	A1&A2&A3	0.0100	Z(HL)	0.0010	0.5514
A1	A2&A3&A4	0.0100	Z(HL)	0.0010	0.3890
A3(LH)	!A1&!A2&!A4	0.0100	n/a	n/a	-0.0275
A3(LH)	!A1&!A2&A4	0.0100	n/a	n/a	-0.0273
A3(LH)	!A1&A2&!A4	0.0100	n/a	n/a	-0.0274
A3(LH)	!A1&A2&A4	0.0100	n/a	n/a	-0.0273
A3(LH)	A1&!A2&!A4	0.0100	n/a	n/a	-0.0275
A3(LH)	A1&!A2&A4	0.0100	n/a	n/a	-0.0274
A3(LH)	A1&A2&!A4	0.0100	n/a	n/a	-0.0192
A2(LH)	!A1&!A3&!A4	0.0100	n/a	n/a	-0.0275
A2(LH)	!A1&!A3&A4	0.0100	n/a	n/a	-0.0275
A2(LH)	!A1&A3&!A4	0.0100	n/a	n/a	-0.0274
A2(LH)	!A1&A3&A4	0.0100	n/a	n/a	-0.0273
A2(LH)	A1&!A3&!A4	0.0100	n/a	n/a	-0.0177
A2(LH)	A1&!A3&A4	0.0100	n/a	n/a	-0.0178
A2(LH)	A1&A3&!A4	0.0100	n/a	n/a	0.0236
A1(LH)	!A2&!A3&!A4	0.0100	n/a	n/a	-0.0170
A1(LH)	!A2&!A3&A4	0.0100	n/a	n/a	-0.0170
A1(LH)	!A2&A3&!A4	0.0100	n/a	n/a	-0.0170
A1(LH)	!A2&A3&A4	0.0100	n/a	n/a	-0.0170
A1(LH)	A2&!A3&!A4	0.0100	n/a	n/a	0.0246
A1(LH)	A2&!A3&A4	0.0100	n/a	n/a	0.0246
A1(LH)	A2&A3&!A4	0.0100	n/a	n/a	0.0658
A3(HL)	!A1&!A2&!A4	0.0100	n/a	n/a	0.0331
A3(HL)	!A1&!A2&A4	0.0100	n/a	n/a	0.0291
A3(HL)	!A1&A2&!A4	0.0100	n/a	n/a	0.0421
A3(HL)	!A1&A2&A4	0.0100	n/a	n/a	0.0343
A3(HL)	A1&!A2&!A4	0.0100	n/a	n/a	0.0372

continues on next page

Table 8 – continued from previous page

A3(HL)	A1&!A2&A4	0.0100	n/a	n/a	0.0326
A3(HL)	A1&A2&!A4	0.0100	n/a	n/a	0.0306
A4(LH)	!A1&!A2&!A3	0.0100	n/a	n/a	-0.0274
A4(LH)	!A1&!A2&A3	0.0100	n/a	n/a	-0.0274
A4(LH)	!A1&A2&!A3	0.0100	n/a	n/a	-0.0274
A4(LH)	!A1&A2&A3	0.0100	n/a	n/a	-0.0273
A4(LH)	A1&!A2&!A3	0.0100	n/a	n/a	-0.0274
A4(LH)	A1&!A2&A3	0.0100	n/a	n/a	-0.0274
A4(LH)	A1&A2&!A3	0.0100	n/a	n/a	-0.0274
A1(HL)	!A2&!A3&!A4	0.0100	n/a	n/a	0.0321
A1(HL)	!A2&!A3&A4	0.0100	n/a	n/a	0.0321
A1(HL)	!A2&A3&!A4	0.0100	n/a	n/a	0.0321
A1(HL)	!A2&A3&A4	0.0100	n/a	n/a	0.0321
A1(HL)	A2&!A3&!A4	0.0100	n/a	n/a	0.0319
A1(HL)	A2&!A3&A4	0.0100	n/a	n/a	0.0319
A1(HL)	A2&A3&!A4	0.0100	n/a	n/a	0.0319
A2(HL)	!A1&!A3&!A4	0.0100	n/a	n/a	0.0412
A2(HL)	!A1&!A3&A4	0.0100	n/a	n/a	0.0400
A2(HL)	!A1&A3&!A4	0.0100	n/a	n/a	0.0407
A2(HL)	!A1&A3&A4	0.0100	n/a	n/a	0.0351
A2(HL)	A1&!A3&!A4	0.0100	n/a	n/a	0.0317
A2(HL)	A1&!A3&A4	0.0100	n/a	n/a	0.0317
A2(HL)	A1&A3&!A4	0.0100	n/a	n/a	0.0317
A4(HL)	!A1&!A2&!A3	0.0100	n/a	n/a	0.0275
A4(HL)	!A1&!A2&A3	0.0100	n/a	n/a	0.0275
A4(HL)	!A1&A2&!A3	0.0100	n/a	n/a	0.0275
A4(HL)	!A1&A2&A3	0.0100	n/a	n/a	0.0280
A4(HL)	A1&!A2&!A3	0.0100	n/a	n/a	0.0275
A4(HL)	A1&!A2&A3	0.0100	n/a	n/a	0.0294
A4(HL)	A1&A2&!A3	0.0100	n/a	n/a	0.0293

LEAKAGE POWER

When Condition	Power (nW)
!A1&!A2&!A3&!A4	0.1282
!A1&!A2&!A3&A4	0.1282
!A1&!A2&A3&!A4	0.1282
!A1&!A2&A3&A4	0.1282
!A1&A2&!A3&!A4	0.1283
!A1&A2&!A3&A4	0.1283
!A1&A2&A3&!A4	0.1283
!A1&A2&A3&A4	0.1284
A1&!A2&!A3&!A4	0.1682
A1&!A2&!A3&A4	0.1682
A1&!A2&A3&!A4	0.1682
A1&!A2&A3&A4	0.1683
A1&A2&!A3&!A4	0.2074
A1&A2&!A3&A4	0.2075
A1&A2&A3&!A4	0.2463
A1&A2&A3&A4	0.2060

gf180mcu_fd_sc_mcu7t5v0__and4_4

gf180mcu_fd_sc_mcu7t5v0__and4_4 symbol

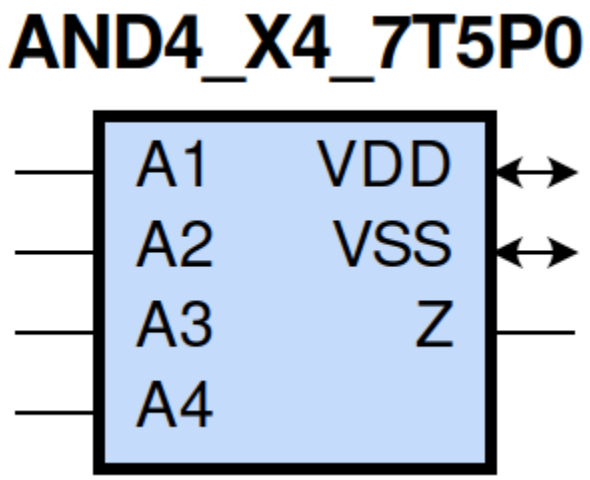

gf180mcu_fd_sc_mcu7t5v0__and4_4 schematic

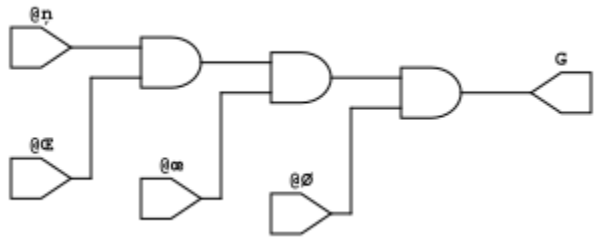

gf180mcu_fd_sc_mcu7t5v0__and4_4 layout

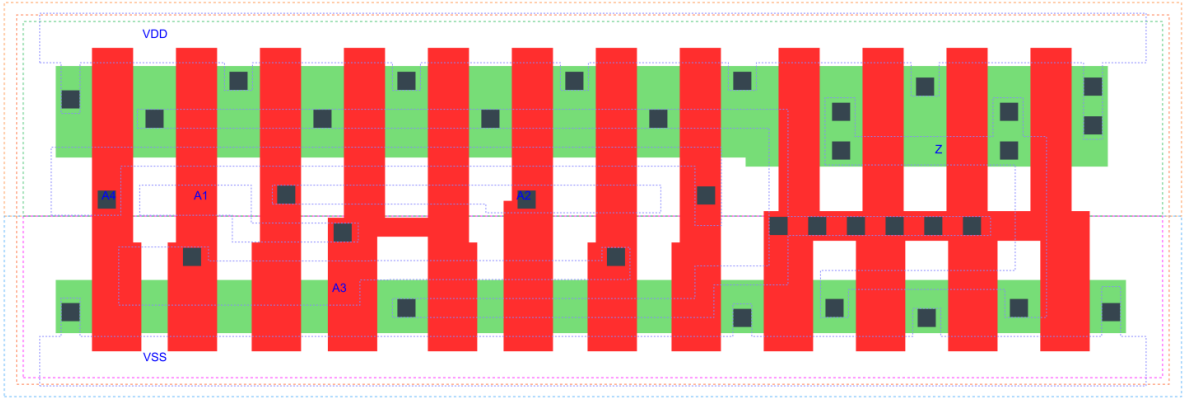

AND4_X4 is a 4-input AND, AND(A1,A2,A3,A4), 4X drive strength

Attributes

Attribute	Value
area	52.684800 μm^2

OUTPUT FUNCTIONS

Output Pin	Function
Z	(A1&A2&A3&A4)

TRUTH TABLE FOR Z

A1	A2	A3	A4	Z
1	1	1	1	1
0	?	?	?	0
?	0	?	?	0
?	?	0	?	0
?	?	?	0	0

FUNCTIONAL SCHEMATIC

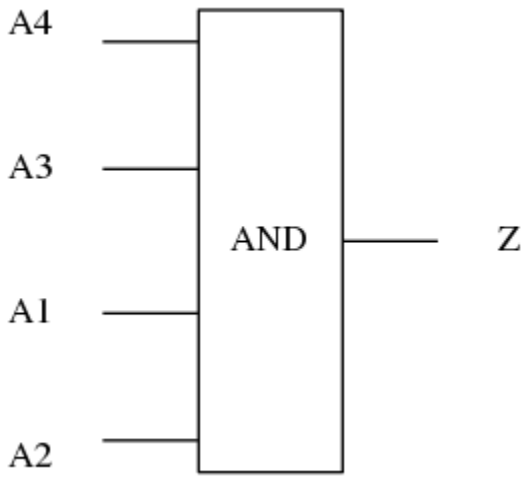

PIN CAPACITANCE (pf)

Pin	Type	Capacitance (pf)
A4	input	0.0101
A3	input	0.0093
A1	input	0.0087
A2	input	0.0089

DELAY AND OUTPUT TRANSITION TIME corresponding to min slew and load

Input Pin	Output	When Condition	Tin (ns)	Out Load (pf)	Delay (ns)	Tout (ns)
A4(LH)	Z(LH)	A1&A2&A3	0.0100	0.0010	0.3970	0.0534
A4(HL)	Z(HL)	A1&A2&A3	0.0100	0.0010	0.2261	0.0379
A3(LH)	Z(LH)	A1&A2&A4	0.0100	0.0010	0.3862	0.0534
A3(HL)	Z(HL)	A1&A2&A4	0.0100	0.0010	0.2156	0.0360
A1(LH)	Z(LH)	A2&A3&A4	0.0100	0.0010	0.3371	0.0534
A1(HL)	Z(HL)	A2&A3&A4	0.0100	0.0010	0.1838	0.0317
A2(HL)	Z(HL)	A1&A3&A4	0.0100	0.0010	0.2001	0.0338
A2(LH)	Z(LH)	A1&A3&A4	0.0100	0.0010	0.3659	0.0534

DYNAMIC ENERGY

Input Pin	When Condition	Tin (ns)	Output	Out Load (pf)	Energy (uW/MHz)
A3	A1&A2&A4	0.0100	Z(LH)	0.0010	0.6223
A2	A1&A3&A4	0.0100	Z(HL)	0.0010	0.7399
A2	A1&A3&A4	0.0100	Z(LH)	0.0010	0.6221
A4	A1&A2&A3	0.0100	Z(LH)	0.0010	0.6220
A1	A2&A3&A4	0.0100	Z(LH)	0.0010	0.6225
A3	A1&A2&A4	0.0100	Z(HL)	0.0010	0.8205
A4	A1&A2&A3	0.0100	Z(HL)	0.0010	0.8949
A1	A2&A3&A4	0.0100	Z(HL)	0.0010	0.6624
A3(LH)	!A1&!A2&!A4	0.0100	n/a	n/a	-0.0715
A3(LH)	!A1&!A2&A4	0.0100	n/a	n/a	-0.0713
A3(LH)	!A1&A2&!A4	0.0100	n/a	n/a	-0.0714
A3(LH)	!A1&A2&A4	0.0100	n/a	n/a	-0.0712
A3(LH)	A1&!A2&!A4	0.0100	n/a	n/a	-0.0715
A3(LH)	A1&!A2&A4	0.0100	n/a	n/a	-0.0713
A3(LH)	A1&A2&!A4	0.0100	n/a	n/a	-0.0585
A2(LH)	!A1&!A3&!A4	0.0100	n/a	n/a	-0.0715
A2(LH)	!A1&!A3&A4	0.0100	n/a	n/a	-0.0714
A2(LH)	!A1&A3&!A4	0.0100	n/a	n/a	-0.0714
A2(LH)	!A1&A3&A4	0.0100	n/a	n/a	-0.0711
A2(LH)	A1&!A3&!A4	0.0100	n/a	n/a	-0.0550
A2(LH)	A1&!A3&A4	0.0100	n/a	n/a	-0.0550
A2(LH)	A1&A3&!A4	0.0100	n/a	n/a	0.0101
A1(LH)	!A2&!A3&!A4	0.0100	n/a	n/a	-0.0544
A1(LH)	!A2&!A3&A4	0.0100	n/a	n/a	-0.0544
A1(LH)	!A2&A3&!A4	0.0100	n/a	n/a	-0.0544
A1(LH)	!A2&A3&A4	0.0100	n/a	n/a	-0.0544
A1(LH)	A2&!A3&!A4	0.0100	n/a	n/a	0.0124
A1(LH)	A2&!A3&A4	0.0100	n/a	n/a	0.0125
A1(LH)	A2&A3&!A4	0.0100	n/a	n/a	0.0773
A3(HL)	!A1&!A2&!A4	0.0100	n/a	n/a	0.0804
A3(HL)	!A1&!A2&A4	0.0100	n/a	n/a	0.0741
A3(HL)	!A1&A2&!A4	0.0100	n/a	n/a	0.0948
A3(HL)	!A1&A2&A4	0.0100	n/a	n/a	0.0823
A3(HL)	A1&!A2&!A4	0.0100	n/a	n/a	0.0871
A3(HL)	A1&!A2&A4	0.0100	n/a	n/a	0.0797
A3(HL)	A1&A2&!A4	0.0100	n/a	n/a	0.0764
A4(LH)	!A1&!A2&!A3	0.0100	n/a	n/a	-0.0713
A4(LH)	!A1&!A2&A3	0.0100	n/a	n/a	-0.0712
A4(LH)	!A1&A2&!A3	0.0100	n/a	n/a	-0.0713
A4(LH)	!A1&A2&A3	0.0100	n/a	n/a	-0.0712
A4(LH)	A1&!A2&!A3	0.0100	n/a	n/a	-0.0713
A4(LH)	A1&!A2&A3	0.0100	n/a	n/a	-0.0712
A4(LH)	A1&A2&!A3	0.0100	n/a	n/a	-0.0713
A1(HL)	!A2&!A3&!A4	0.0100	n/a	n/a	0.0789
A1(HL)	!A2&!A3&A4	0.0100	n/a	n/a	0.0789
A1(HL)	!A2&A3&!A4	0.0100	n/a	n/a	0.0789
A1(HL)	!A2&A3&A4	0.0100	n/a	n/a	0.0789
A1(HL)	A2&!A3&!A4	0.0100	n/a	n/a	0.0787
A1(HL)	A2&!A3&A4	0.0100	n/a	n/a	0.0786
A1(HL)	A2&A3&!A4	0.0100	n/a	n/a	0.0786
A2(HL)	!A1&!A3&!A4	0.0100	n/a	n/a	0.0934

continues on next page

Table 9 – continued from previous page

A2(HL)	!A1&!A3&A4	0.0100	n/a	n/a	0.0915
A2(HL)	!A1&A3&!A4	0.0100	n/a	n/a	0.0927
A2(HL)	!A1&A3&A4	0.0100	n/a	n/a	0.0836
A2(HL)	A1&!A3&!A4	0.0100	n/a	n/a	0.0783
A2(HL)	A1&!A3&A4	0.0100	n/a	n/a	0.0783
A2(HL)	A1&A3&!A4	0.0100	n/a	n/a	0.0783
A4(HL)	!A1&!A2&!A3	0.0100	n/a	n/a	0.0717
A4(HL)	!A1&!A2&A3	0.0100	n/a	n/a	0.0716
A4(HL)	!A1&A2&!A3	0.0100	n/a	n/a	0.0716
A4(HL)	!A1&A2&A3	0.0100	n/a	n/a	0.0724
A4(HL)	A1&!A2&!A3	0.0100	n/a	n/a	0.0716
A4(HL)	A1&!A2&A3	0.0100	n/a	n/a	0.0747
A4(HL)	A1&A2&!A3	0.0100	n/a	n/a	0.0744

LEAKAGE POWER

When Condition	Power (nW)
!A1&!A2&!A3&!A4	0.2064
!A1&!A2&!A3&A4	0.2064
!A1&!A2&A3&!A4	0.2064
!A1&!A2&A3&A4	0.2064
!A1&A2&!A3&!A4	0.2065
!A1&A2&!A3&A4	0.2065
!A1&A2&A3&!A4	0.2066
!A1&A2&A3&A4	0.2069
A1&!A2&!A3&!A4	0.2866
A1&!A2&!A3&A4	0.2866
A1&!A2&A3&!A4	0.2867
A1&!A2&A3&A4	0.2869
A1&A2&!A3&!A4	0.3652
A1&A2&!A3&A4	0.3655
A1&A2&A3&!A4	0.4432
A1&A2&A3&A4	0.3632

gf180mcu_fd_sc_mcu7t5v0__antenna

gf180mcu_fd_sc_mcu7t5v0__antenna symbol

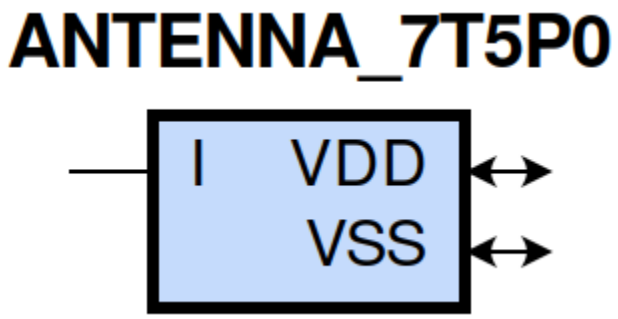

gf180mcu_fd_sc_mcu7t5v0__antenna schematic

gf180mcu_fd_sc_mcu7t5v0__antenna layout

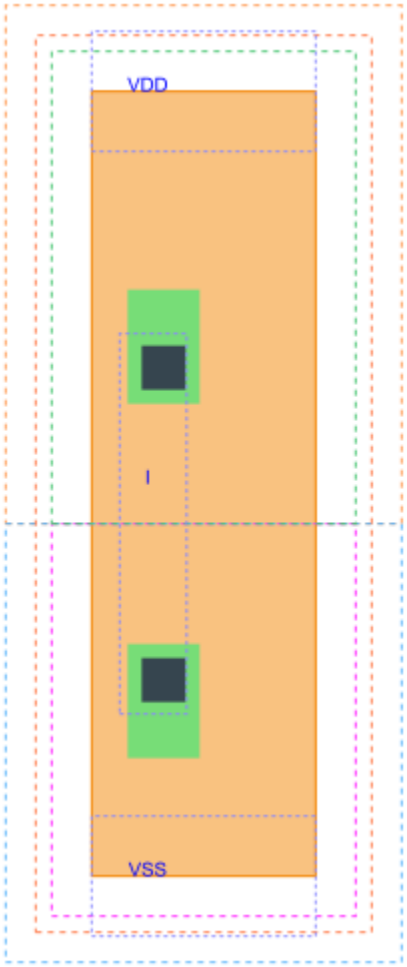

ANTENNA is an antenna cell

Attributes

Attribute	Value
area	4.390400 μm^2

FUNCTIONAL SCHEMATIC

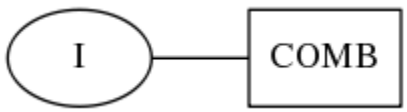

PIN CAPACITANCE (pf)

Pin	Type	Capacitance (pf)
I	input	0.0011

DYNAMIC ENERGY

Input Pin	When Condition	Tin (ns)	Energy (uW/MHz)
I(LH)	default	0.0100	-0.0092
I(HL)	default	0.0100	0.0092

LEAKAGE POWER

When Condition	Power (nW)
!I	0.0500
!I	0.0750
I	0.0750
I	0.0500

gf180mcu_fd_sc_mcu7t5v0__aoi21_1

gf180mcu_fd_sc_mcu7t5v0__aoi21_1 symbol

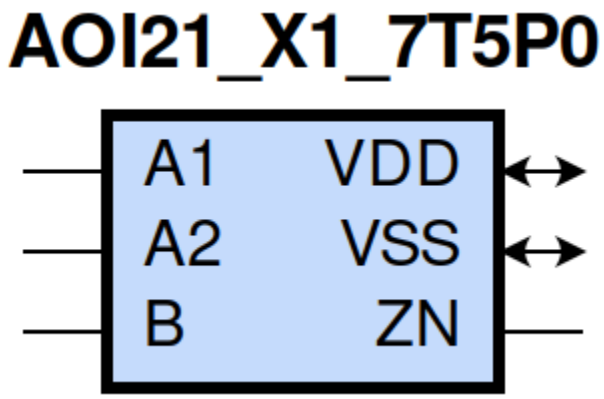

gf180mcu_fd_sc_mcu7t5v0__aoi21_1 schematic

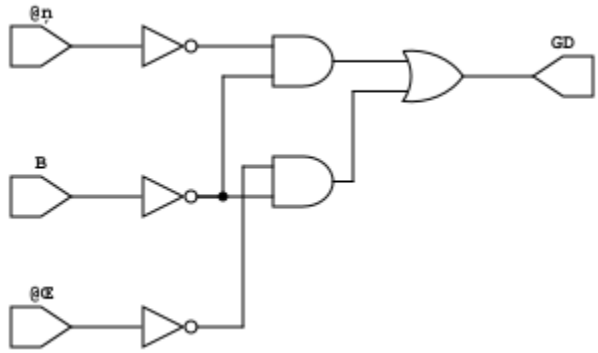

gf180mcu_fd_sc_mcu7t5v0__aoi21_1 layout

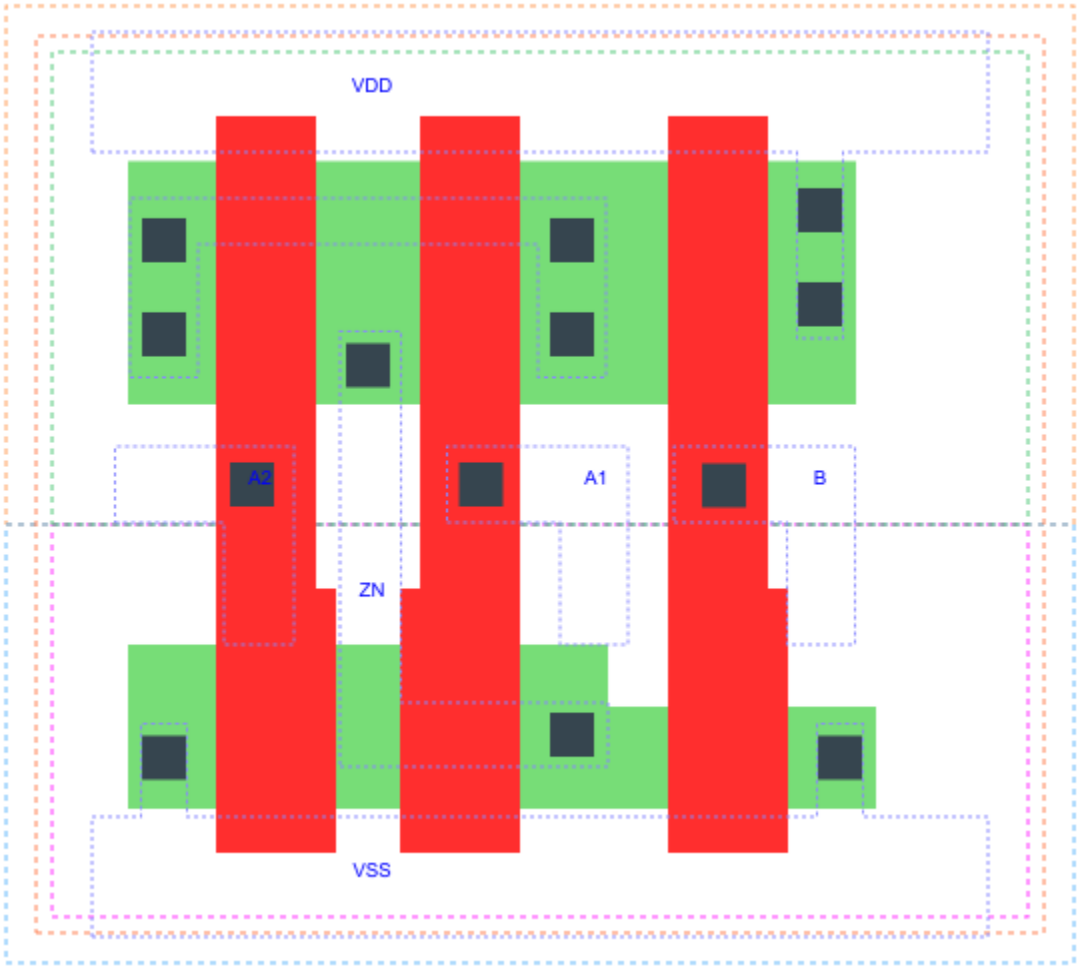

AOI21_X1 is a 2-input AND into 2-input NOR, NOR[AND(A1,A2),B], 1X drive strength

Attributes

Attribute	Value
area	17.561600 μm^2

OUTPUT FUNCTIONS

Output Pin	Function
ZN	(((!A1)&(!B))|((!A2)&(!B)))

TRUTH TABLE FOR ZN

A1	A2	B	ZN
0	?	0	1
?	0	0	1
1	1	?	0
?	?	1	0

FUNCTIONAL SCHEMATIC

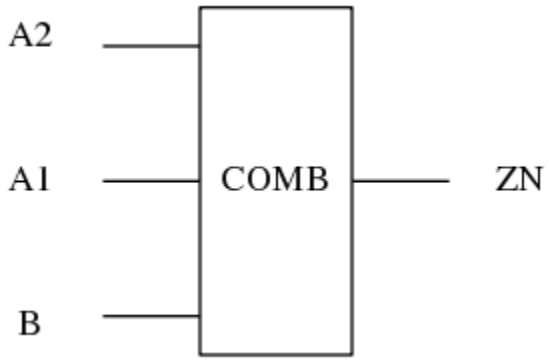

PIN CAPACITANCE (pf)

Pin	Type	Capacitance (pf)
A2	input	0.0048
A1	input	0.0049
B	input	0.0040

DELAY AND OUTPUT TRANSITION TIME corresponding to min slew and load

Input Pin	Output	When Condition	Tin (ns)	Out Load (pf)	Delay (ns)	Tout (ns)
A2(HL)	ZN(LH)	A1&!B	0.0100	0.0010	0.1307	0.1100
A2(LH)	ZN(HL)	A1&!B	0.0100	0.0010	0.0738	0.0364
A1(HL)	ZN(LH)	A2&!B	0.0100	0.0010	0.0993	0.0801
A1(LH)	ZN(HL)	A2&!B	0.0100	0.0010	0.0624	0.0364
B(LH)	ZN(HL)	!A1&!A2	0.0100	0.0010	0.1150	0.0699
B(LH)	ZN(HL)	!A1&A2	0.0100	0.0010	0.0932	0.0601
B(LH)	ZN(HL)	A1&!A2	0.0100	0.0010	0.1030	0.0802
B(HL)	ZN(LH)	!A1&!A2	0.0100	0.0010	0.1203	0.0792
B(HL)	ZN(LH)	!A1&A2	0.0100	0.0010	0.1418	0.0834
B(HL)	ZN(LH)	A1&!A2	0.0100	0.0010	0.1798	0.1118

DYNAMIC ENERGY

Input Pin	When Condition	Tin (ns)	Output	Out Load (pf)	Energy (uW/MHz)
A1	A2&!B	0.0100	ZN(LH)	0.0010	0.1176
B	!A1&!A2	0.0100	ZN(HL)	0.0010	0.0531
B	!A1&A2	0.0100	ZN(HL)	0.0010	0.0465
B	A1&!A2	0.0100	ZN(HL)	0.0010	0.0465
A2	A1&!B	0.0100	ZN(LH)	0.0010	0.1546
A1	A2&!B	0.0100	ZN(HL)	0.0010	0.0038
B	!A1&!A2	0.0100	ZN(LH)	0.0010	0.1837
B	!A1&A2	0.0100	ZN(LH)	0.0010	0.1618
B	A1&!A2	0.0100	ZN(LH)	0.0010	0.2035
A2	A1&!B	0.0100	ZN(HL)	0.0010	0.0038
B(HL)	A1&A2	0.0100	n/a	n/a	0.0392
A2(LH)	!A1&!B	0.0100	n/a	n/a	-0.0396
A2(LH)	!A1&B	0.0100	n/a	n/a	-0.0096
A2(LH)	A1&B	0.0100	n/a	n/a	-0.0103
A1(LH)	!A2&!B	0.0100	n/a	n/a	-0.0292
A1(LH)	!A2&B	0.0100	n/a	n/a	-0.0096
A1(LH)	A2&B	0.0100	n/a	n/a	-0.0103
A2(HL)	!A1&!B	0.0100	n/a	n/a	0.0436
A2(HL)	!A1&B	0.0100	n/a	n/a	0.0102
A2(HL)	A1&B	0.0100	n/a	n/a	0.0456
B(LH)	A1&A2	0.0100	n/a	n/a	-0.0305
A1(HL)	!A2&!B	0.0100	n/a	n/a	0.0441
A1(HL)	!A2&B	0.0100	n/a	n/a	0.0102
A1(HL)	A2&B	0.0100	n/a	n/a	0.0455

LEAKAGE POWER

When Condition	Power (nW)
!A1&!A2&!B	0.1008
!A1&A2&!B	0.1010
A1&!A2&!B	0.1409
!A1&!A2&B	0.1553
!A1&A2&B	0.1575
A1&!A2&B	0.1575
A1&A2&!B	0.1030
A1&A2&B	0.1030

gf180mcu_fd_sc_mcu7t5v0__aoi21_2

gf180mcu_fd_sc_mcu7t5v0__aoi21_2 symbol

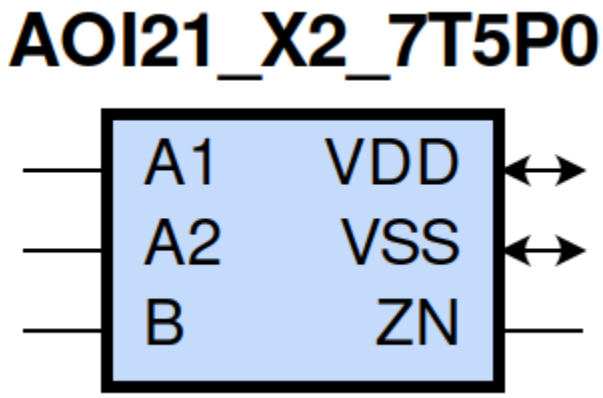

gf180mcu_fd_sc_mcu7t5v0__aoi21_2 schematic

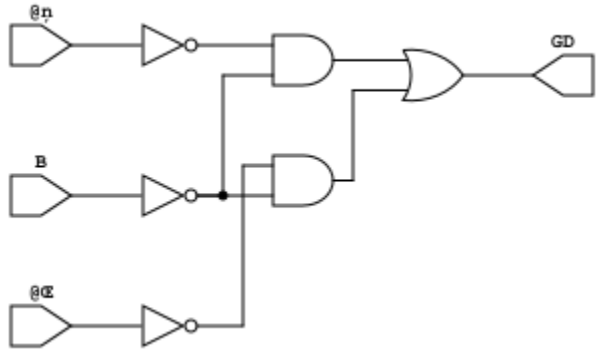

gf180mcu_fd_sc_mcu7t5v0__aoi21_2 layout

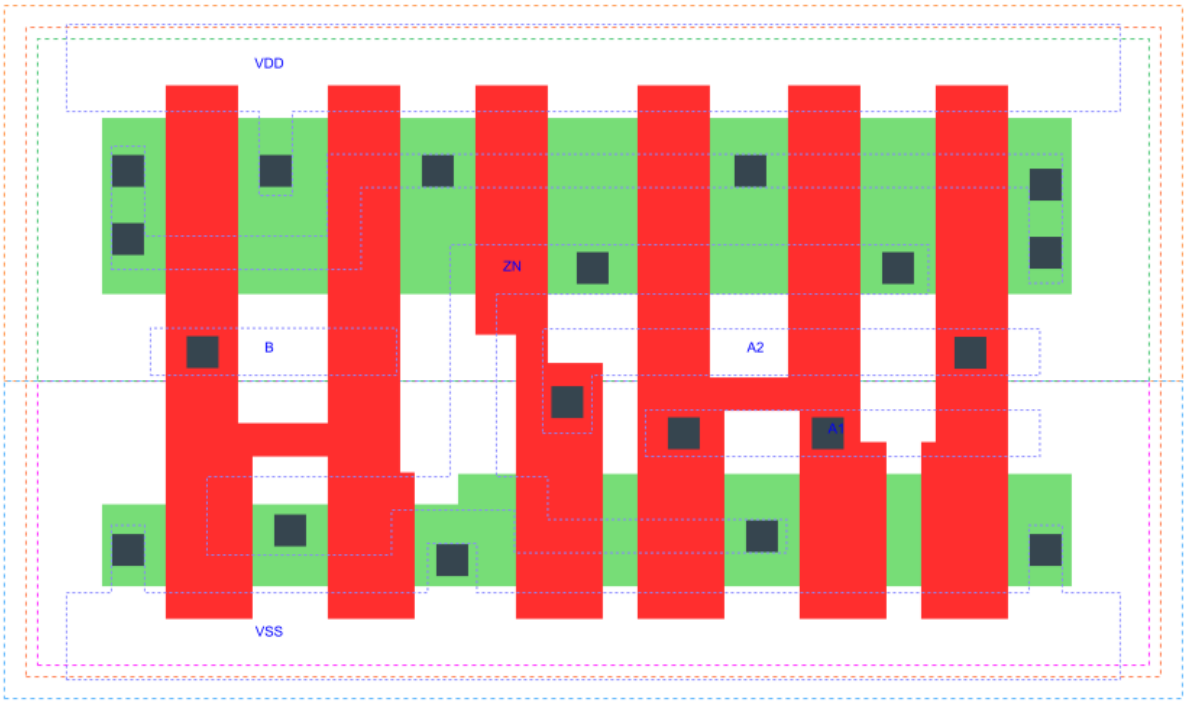

AOI21_X2 is a 2-input AND into 2-input NOR, NOR[AND(A1,A2),B], 2X drive strength

Attributes

Attribute	Value
area	28.537600 μm^2

OUTPUT FUNCTIONS

Output Pin	Function
ZN	(((!A1)&(!B))|((!A2)&(!B)))

TRUTH TABLE FOR ZN

A1	A2	B	ZN
0	?	0	1
?	0	0	1
1	1	?	0
?	?	1	0

FUNCTIONAL SCHEMATIC

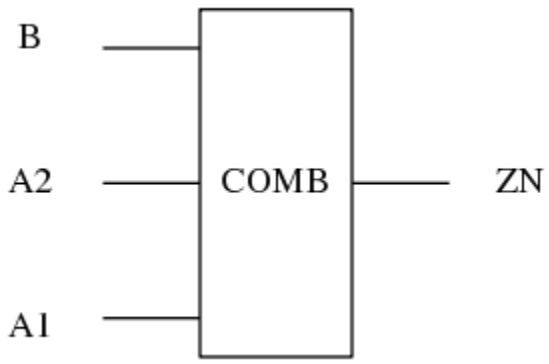

PIN CAPACITANCE (pf)

Pin	Type	Capacitance (pf)
B	input	0.0079
A2	input	0.0098
A1	input	0.0093

DELAY AND OUTPUT TRANSITION TIME corresponding to min slew and load

Input Pin	Output	When Condition	Tin (ns)	Out Load (pf)	Delay (ns)	Tout (ns)
B(LH)	ZN(HL)	!A1&!A2	0.0100	0.0010	0.1009	0.0597
B(LH)	ZN(HL)	!A1&A2	0.0100	0.0010	0.0807	0.0514
B(LH)	ZN(HL)	A1&!A2	0.0100	0.0010	0.0885	0.0681
B(HL)	ZN(LH)	!A1&!A2	0.0100	0.0010	0.1143	0.0746
B(HL)	ZN(LH)	!A1&A2	0.0100	0.0010	0.1343	0.0779
B(HL)	ZN(LH)	A1&!A2	0.0100	0.0010	0.1693	0.1038
A2(HL)	ZN(LH)	A1&!B	0.0100	0.0010	0.1208	0.1019
A2(LH)	ZN(HL)	A1&!B	0.0100	0.0010	0.0729	0.0353
A1(HL)	ZN(LH)	A2&!B	0.0100	0.0010	0.0924	0.0744
A1(LH)	ZN(HL)	A2&!B	0.0100	0.0010	0.0621	0.0355

DYNAMIC ENERGY

Input Pin	When Condition	Tin (ns)	Output	Out Load (pf)	Energy (uW/MHz)
A1	A2&!B	0.0100	ZN(LH)	0.0010	0.2374
B	!A1&!A2	0.0100	ZN(HL)	0.0010	0.1009
B	!A1&A2	0.0100	ZN(HL)	0.0010	0.0879
B	A1&!A2	0.0100	ZN(HL)	0.0010	0.0879
A2	A1&!B	0.0100	ZN(LH)	0.0010	0.3051
A1	A2&!B	0.0100	ZN(HL)	0.0010	0.0101
B	!A1&!A2	0.0100	ZN(LH)	0.0010	0.3729
B	!A1&A2	0.0100	ZN(LH)	0.0010	0.3290
B	A1&!A2	0.0100	ZN(LH)	0.0010	0.4060
A2	A1&!B	0.0100	ZN(HL)	0.0010	0.0099
B(HL)	A1&A2	0.0100	n/a	n/a	0.0786
A2(LH)	!A1&!B	0.0100	n/a	n/a	-0.0789
A2(LH)	!A1&B	0.0100	n/a	n/a	-0.0188
A2(LH)	A1&B	0.0100	n/a	n/a	-0.0204
A1(LH)	!A2&!B	0.0100	n/a	n/a	-0.0618
A1(LH)	!A2&B	0.0100	n/a	n/a	-0.0188
A1(LH)	A2&B	0.0100	n/a	n/a	-0.0203
A2(HL)	!A1&!B	0.0100	n/a	n/a	0.0864
A2(HL)	!A1&B	0.0100	n/a	n/a	0.0201
A2(HL)	A1&B	0.0100	n/a	n/a	0.0833
B(LH)	A1&A2	0.0100	n/a	n/a	-0.0601
A1(HL)	!A2&!B	0.0100	n/a	n/a	0.0873
A1(HL)	!A2&B	0.0100	n/a	n/a	0.0201
A1(HL)	A2&B	0.0100	n/a	n/a	0.0833

LEAKAGE POWER

When Condition	Power (nW)
!A1&!A2&!B	0.1514
!A1&A2&!B	0.1519
A1&!A2&!B	0.2317
!A1&!A2&B	0.2605
!A1&A2&B	0.2651
A1&!A2&B	0.2651
A1&A2&!B	0.1560
A1&A2&B	0.1560

gf180mcu_fd_sc_mcu7t5v0__aoi21_4

gf180mcu_fd_sc_mcu7t5v0__aoi21_4 symbol

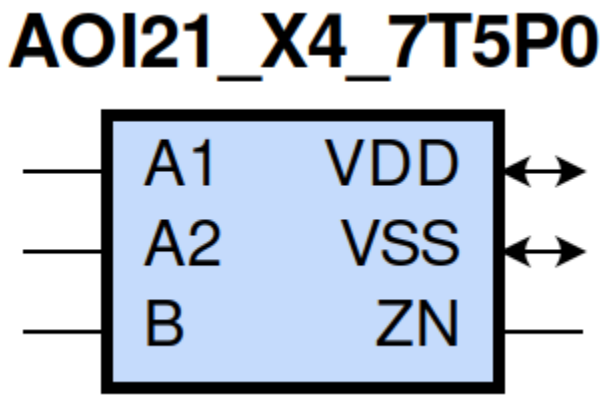

gf180mcu_fd_sc_mcu7t5v0__aoi21_4 schematic

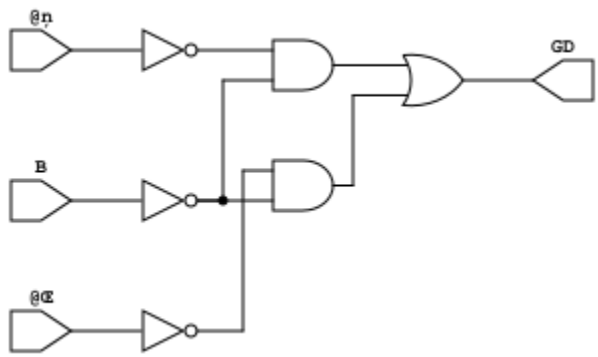

gf180mcu_fd_sc_mcu7t5v0__aoi21_4 layout

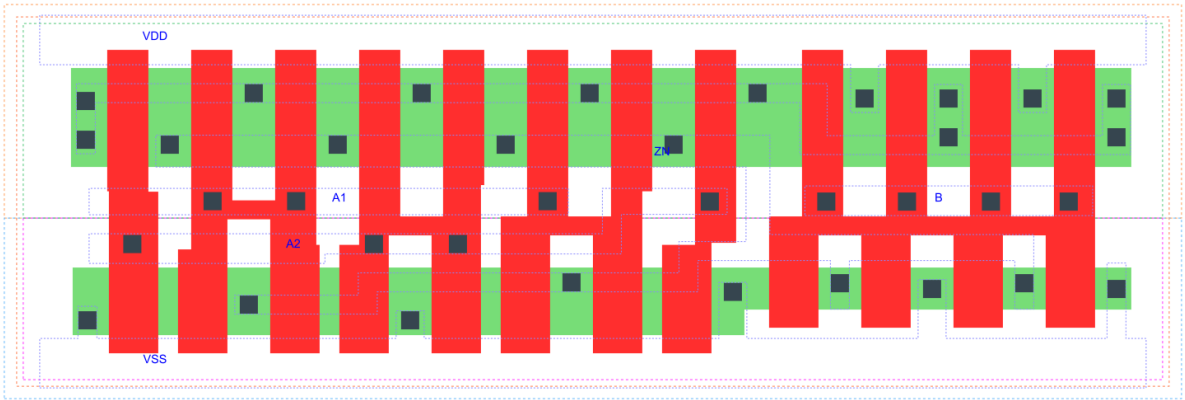

AOI21_X4 is a 2-input AND into 2-input NOR, NOR[AND(A1,A2),B], 4X drive strength

Attributes

Attribute	Value
area	52.684800 μm^2

OUTPUT FUNCTIONS

Output Pin	Function
ZN	(((!A1)&(!B))|((!A2)&(!B)))

TRUTH TABLE FOR ZN

A1	A2	B	ZN
0	?	0	1
?	0	0	1
1	1	?	0
?	?	1	0

FUNCTIONAL SCHEMATIC

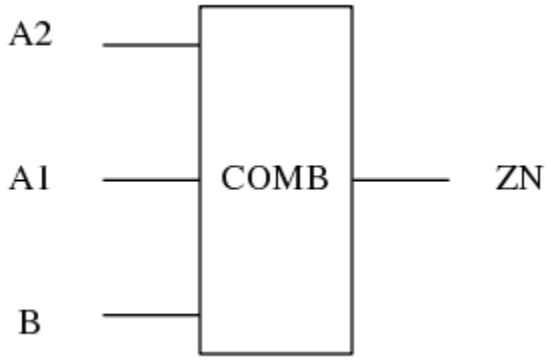

PIN CAPACITANCE (pf)

Pin	Type	Capacitance (pf)
A2	input	0.0198
A1	input	0.0195
B	input	0.0152

DELAY AND OUTPUT TRANSITION TIME corresponding to min slew and load

Input Pin	Output	When Condition	Tin (ns)	Out Load (pf)	Delay (ns)	Tout (ns)
A2(HL)	ZN(LH)	A1&!B	0.0100	0.0010	0.1216	0.1010
A2(LH)	ZN(HL)	A1&!B	0.0100	0.0010	0.0681	0.0320
A1(HL)	ZN(LH)	A2&!B	0.0100	0.0010	0.0904	0.0716
A1(LH)	ZN(HL)	A2&!B	0.0100	0.0010	0.0572	0.0321
B(LH)	ZN(HL)	!A1&!A2	0.0100	0.0010	0.1064	0.0632
B(LH)	ZN(HL)	!A1&A2	0.0100	0.0010	0.0852	0.0537
B(LH)	ZN(HL)	A1&!A2	0.0100	0.0010	0.0946	0.0729
B(HL)	ZN(LH)	!A1&!A2	0.0100	0.0010	0.1107	0.0726
B(HL)	ZN(LH)	!A1&A2	0.0100	0.0010	0.1296	0.0752
B(HL)	ZN(LH)	A1&!A2	0.0100	0.0010	0.1671	0.1028

DYNAMIC ENERGY

Input Pin	When Condition	Tin (ns)	Output	Out Load (pf)	Energy (uW/MHz)
A1	A2&!B	0.0100	ZN(LH)	0.0010	0.4823
B	!A1&!A2	0.0100	ZN(HL)	0.0010	0.1874
B	!A1&A2	0.0100	ZN(HL)	0.0010	0.1614
B	A1&!A2	0.0100	ZN(HL)	0.0010	0.1611
A2	A1&!B	0.0100	ZN(LH)	0.0010	0.6271
A1	A2&!B	0.0100	ZN(HL)	0.0010	0.0149
B	!A1&!A2	0.0100	ZN(LH)	0.0010	0.7461
B	!A1&A2	0.0100	ZN(LH)	0.0010	0.6592
B	A1&!A2	0.0100	ZN(LH)	0.0010	0.8215
A2	A1&!B	0.0100	ZN(HL)	0.0010	0.0145
B(HL)	A1&A2	0.0100	n/a	n/a	0.1547
A2(LH)	!A1&!B	0.0100	n/a	n/a	-0.1557
A2(LH)	!A1&B	0.0100	n/a	n/a	-0.0366
A2(LH)	A1&B	0.0100	n/a	n/a	-0.0398
A1(LH)	!A2&!B	0.0100	n/a	n/a	-0.1198
A1(LH)	!A2&B	0.0100	n/a	n/a	-0.0366
A1(LH)	A2&B	0.0100	n/a	n/a	-0.0397
A2(HL)	!A1&!B	0.0100	n/a	n/a	0.1718
A2(HL)	!A1&B	0.0100	n/a	n/a	0.0394
A2(HL)	A1&B	0.0100	n/a	n/a	0.1572
B(LH)	A1&A2	0.0100	n/a	n/a	-0.1180
A1(HL)	!A2&!B	0.0100	n/a	n/a	0.1737
A1(HL)	!A2&B	0.0100	n/a	n/a	0.0393
A1(HL)	A2&B	0.0100	n/a	n/a	0.1572

LEAKAGE POWER

When Condition	Power (nW)
!A1&!A2&!B	0.2532
!A1&A2&!B	0.2541
A1&!A2&!B	0.4138
!A1&!A2&B	0.4711
!A1&A2&B	0.4801
A1&!A2&B	0.4801
A1&A2&!B	0.2619
A1&A2&B	0.2619

gf180mcu_fd_sc_mcu7t5v0__aoi211_1

gf180mcu_fd_sc_mcu7t5v0__aoi211_1 symbol

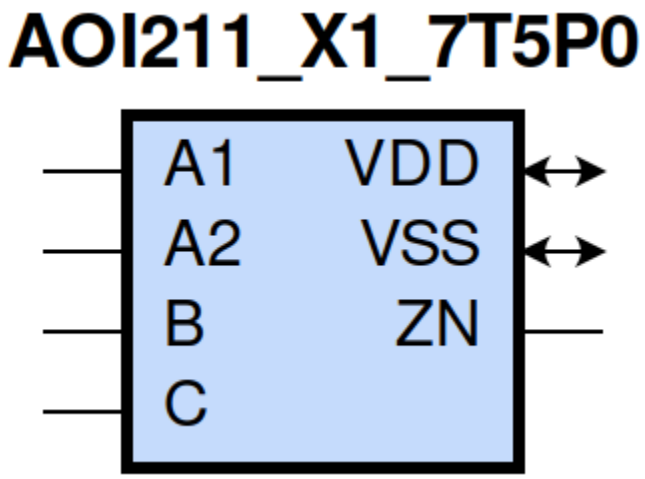

gf180mcu_fd_sc_mcu7t5v0__aoi211_1 schematic

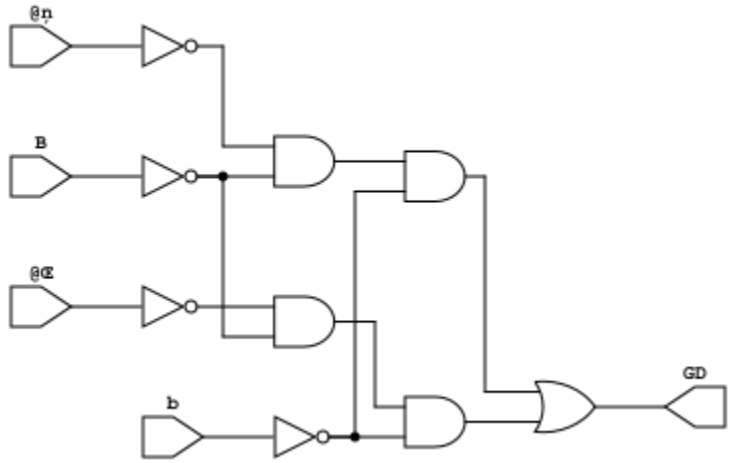

gf180mcu_fd_sc_mcu7t5v0__aoi211_1 layout

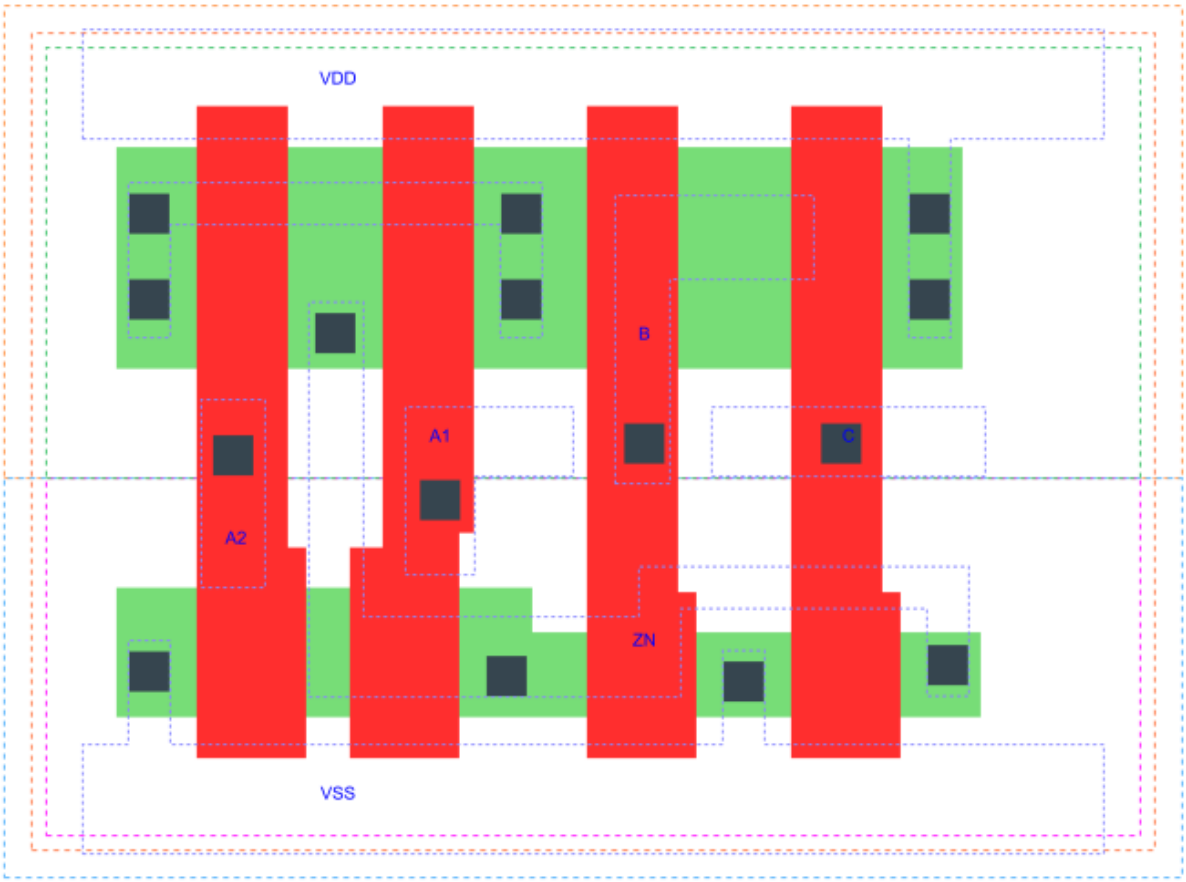

AOI211_X1 is a 2-input AND into 3-input NOR, NOR[AND(A1,A2),B,C], 1X drive strength

Attributes

Attribute	Value
area	21.952000 μm^2

OUTPUT FUNCTIONS

Output Pin	Function
ZN	(((!A1)&(!B)&(!C))|((!A2)&(!B)&(!C)))

TRUTH TABLE FOR ZN

A1	A2	B	C	ZN
0	?	0	0	1
?	0	0	0	1
1	1	?	?	0
?	?	1	?	0
?	?	?	1	0

FUNCTIONAL SCHEMATIC

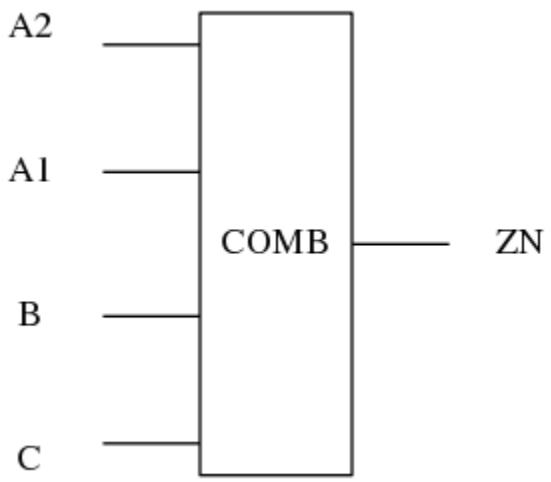

PIN CAPACITANCE (pf)

Pin	Type	Capacitance (pf)
A2	input	0.0045
A1	input	0.0047
B	input	0.0040
C	input	0.0039

DELAY AND OUTPUT TRANSITION TIME corresponding to min slew and load

Input Pin	Output	When Condition	Tin (ns)	Out Load (pf)	Delay (ns)	Tout (ns)
A2(HL)	ZN(LH)	A1&!B&!C	0.0100	0.0010	0.1811	0.1872
A2(LH)	ZN(HL)	A1&!B&!C	0.0100	0.0010	0.0915	0.0502
A1(HL)	ZN(LH)	A2&!B&!C	0.0100	0.0010	0.1446	0.1477
A1(LH)	ZN(HL)	A2&!B&!C	0.0100	0.0010	0.0806	0.0502
B(LH)	ZN(HL)	!A1&!A2&!C	0.0100	0.0010	0.1359	0.0837
B(LH)	ZN(HL)	!A1&A2&!C	0.0100	0.0010	0.1138	0.0737
B(LH)	ZN(HL)	A1&!A2&!C	0.0100	0.0010	0.1232	0.0912
B(HL)	ZN(LH)	!A1&!A2&!C	0.0100	0.0010	0.2075	0.1633
B(HL)	ZN(LH)	!A1&A2&!C	0.0100	0.0010	0.2343	0.1570
B(HL)	ZN(LH)	A1&!A2&!C	0.0100	0.0010	0.2817	0.1931
C(HL)	ZN(LH)	!A1&!A2&!B	0.0100	0.0010	0.2322	0.1630
C(HL)	ZN(LH)	!A1&A2&!B	0.0100	0.0010	0.2588	0.1572
C(HL)	ZN(LH)	A1&!A2&!B	0.0100	0.0010	0.3061	0.1933
C(LH)	ZN(HL)	!A1&!A2&!B	0.0100	0.0010	0.1514	0.0992
C(LH)	ZN(HL)	!A1&A2&!B	0.0100	0.0010	0.1206	0.0874
C(LH)	ZN(HL)	A1&!A2&!B	0.0100	0.0010	0.1322	0.1073

DYNAMIC ENERGY

Input Pin	When Condition	Tin (ns)	Output	Out Load (pf)	Energy (uW/MHz)
C	!A1&!A2&!B	0.0100	ZN(LH)	0.0010	0.2371
C	!A1&A2&!B	0.0100	ZN(LH)	0.0010	0.2151
C	A1&!A2&!B	0.0100	ZN(LH)	0.0010	0.2503
C	!A1&!A2&!B	0.0100	ZN(HL)	0.0010	0.0755
C	!A1&A2&!B	0.0100	ZN(HL)	0.0010	0.0693
C	A1&!A2&!B	0.0100	ZN(HL)	0.0010	0.0693
A1	A2&!B&!C	0.0100	ZN(LH)	0.0010	0.1432
B	!A1&!A2&!C	0.0100	ZN(HL)	0.0010	0.0532
B	!A1&A2&!C	0.0100	ZN(HL)	0.0010	0.0466
B	A1&!A2&!C	0.0100	ZN(HL)	0.0010	0.0466
A2	A1&!B&!C	0.0100	ZN(LH)	0.0010	0.1733
A1	A2&!B&!C	0.0100	ZN(HL)	0.0010	0.0044
B	!A1&!A2&!C	0.0100	ZN(LH)	0.0010	0.2080
B	!A1&A2&!C	0.0100	ZN(LH)	0.0010	0.1860
B	A1&!A2&!C	0.0100	ZN(LH)	0.0010	0.2212
A2	A1&!B&!C	0.0100	ZN(HL)	0.0010	0.0044
B(HL)	!A1&!A2&C	0.0100	n/a	n/a	0.0259
B(HL)	!A1&A2&C	0.0100	n/a	n/a	0.0258
B(HL)	A1&!A2&C	0.0100	n/a	n/a	0.0258
B(HL)	A1&A2&!C	0.0100	n/a	n/a	0.0391
B(HL)	A1&A2&C	0.0100	n/a	n/a	0.0229
A2(LH)	!A1&!B&!C	0.0100	n/a	n/a	-0.0397
A2(LH)	!A1&!B&C	0.0100	n/a	n/a	-0.0096
A2(LH)	!A1&B&!C	0.0100	n/a	n/a	-0.0095
A2(LH)	!A1&B&C	0.0100	n/a	n/a	-0.0095
A2(LH)	A1&!B&C	0.0100	n/a	n/a	-0.0105

continues on next page

Table 10 – continued from previous page

A2(LH)	A1&B&!C	0.0100	n/a	n/a	-0.0103
A2(LH)	A1&B&C	0.0100	n/a	n/a	-0.0104
A1(LH)	!A2&!B&!C	0.0100	n/a	n/a	-0.0315
A1(LH)	!A2&!B&C	0.0100	n/a	n/a	-0.0096
A1(LH)	!A2&B&!C	0.0100	n/a	n/a	-0.0095
A1(LH)	!A2&B&C	0.0100	n/a	n/a	-0.0095
A1(LH)	A2&!B&C	0.0100	n/a	n/a	-0.0105
A1(LH)	A2&B&!C	0.0100	n/a	n/a	-0.0103
A1(LH)	A2&B&C	0.0100	n/a	n/a	-0.0103
C(HL)	!A1&!A2&B	0.0100	n/a	n/a	0.0391
C(HL)	!A1&A2&B	0.0100	n/a	n/a	0.0391
C(HL)	A1&!A2&B	0.0100	n/a	n/a	0.0391
C(HL)	A1&A2&!B	0.0100	n/a	n/a	0.0390
C(HL)	A1&A2&B	0.0100	n/a	n/a	0.0391
A2(HL)	!A1&!B&!C	0.0100	n/a	n/a	0.0430
A2(HL)	!A1&!B&C	0.0100	n/a	n/a	0.0102
A2(HL)	!A1&B&!C	0.0100	n/a	n/a	0.0102
A2(HL)	!A1&B&C	0.0100	n/a	n/a	0.0102
A2(HL)	A1&!B&C	0.0100	n/a	n/a	0.0696
A2(HL)	A1&B&!C	0.0100	n/a	n/a	0.0435
A2(HL)	A1&B&C	0.0100	n/a	n/a	0.0435
B(LH)	!A1&!A2&C	0.0100	n/a	n/a	-0.0127
B(LH)	!A1&A2&C	0.0100	n/a	n/a	-0.0127
B(LH)	A1&!A2&C	0.0100	n/a	n/a	-0.0127
B(LH)	A1&A2&!C	0.0100	n/a	n/a	-0.0286
B(LH)	A1&A2&C	0.0100	n/a	n/a	-0.0231
A1(HL)	!A2&!B&!C	0.0100	n/a	n/a	0.0435
A1(HL)	!A2&!B&C	0.0100	n/a	n/a	0.0102
A1(HL)	!A2&B&!C	0.0100	n/a	n/a	0.0102
A1(HL)	!A2&B&C	0.0100	n/a	n/a	0.0102
A1(HL)	A2&!B&C	0.0100	n/a	n/a	0.0695
A1(HL)	A2&B&!C	0.0100	n/a	n/a	0.0435
A1(HL)	A2&B&C	0.0100	n/a	n/a	0.0435
C(LH)	!A1&!A2&B	0.0100	n/a	n/a	-0.0346
C(LH)	!A1&A2&B	0.0100	n/a	n/a	-0.0346
C(LH)	A1&!A2&B	0.0100	n/a	n/a	-0.0346
C(LH)	A1&A2&!B	0.0100	n/a	n/a	-0.0326
C(LH)	A1&A2&B	0.0100	n/a	n/a	-0.0365

LEAKAGE POWER

When Condition	Power (nW)
!A1&!A2&!B&!C	0.1267
!A1&A2&!B&!C	0.1269
A1&!A2&!B&!C	0.1669
!A1&!A2&!B&C	0.1906
!A1&!A2&B&!C	0.1553
!A1&!A2&B&C	0.1553
!A1&A2&!B&C	0.1929
!A1&A2&B&!C	0.1576
!A1&A2&B&C	0.1576
A1&!A2&!B&C	0.1929
A1&!A2&B&!C	0.1576
A1&!A2&B&C	0.1576
A1&A2&!B&!C	0.1030
A1&A2&!B&C	0.1029
A1&A2&B&!C	0.1029
A1&A2&B&C	0.1029

gf180mcu_fd_sc_mcu7t5v0__aoi211_2

gf180mcu_fd_sc_mcu7t5v0__aoi211_2 symbol

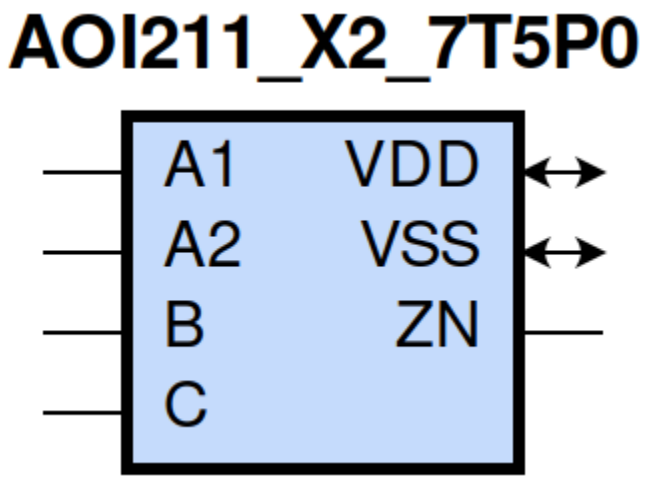

gf180mcu_fd_sc_mcu7t5v0__aoi211_2 schematic

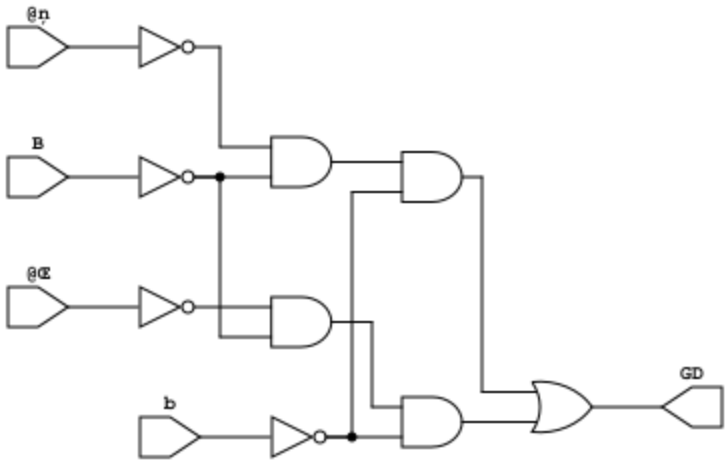

gf180mcu_fd_sc_mcu7t5v0__aoi211_2 layout

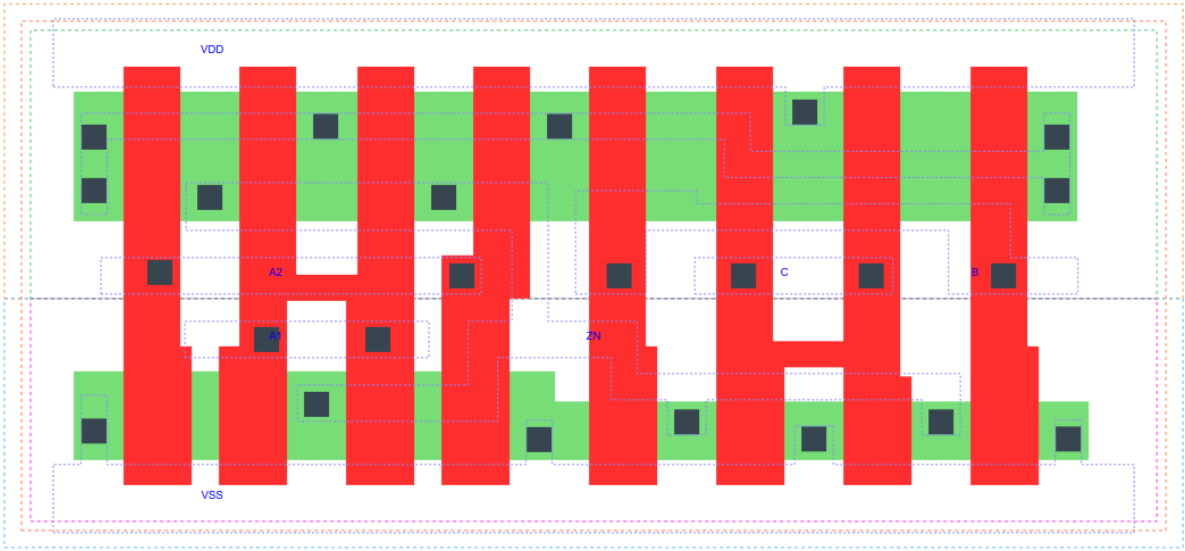

AOI211_X2 is a 2-input AND into 3-input NOR, NOR[AND(A1,A2),B,C], 2X drive strength

Attributes

Attribute	Value
area	37.318400 μm^2

OUTPUT FUNCTIONS

Output Pin	Function
ZN	(((!A1)&(!B)&(!C))|((!A2)&(!B)&(!C)))

TRUTH TABLE FOR ZN

A1	A2	B	C	ZN
0	?	0	0	1
?	0	0	0	1
1	1	?	?	0
?	?	1	?	0
?	?	?	1	0

FUNCTIONAL SCHEMATIC

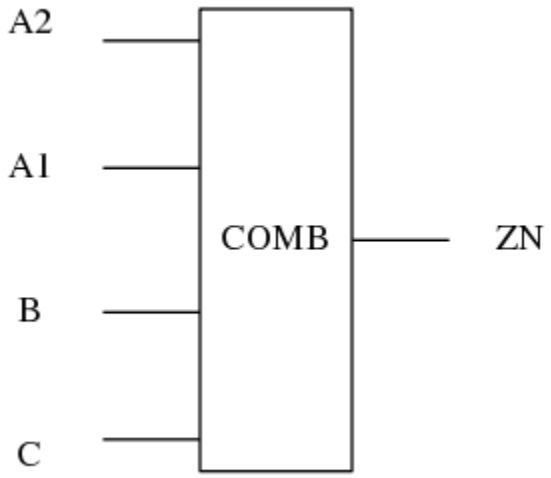

PIN CAPACITANCE (pf)

Pin	Type	Capacitance (pf)
A2	input	0.0096
A1	input	0.0091
B	input	0.0085
C	input	0.0075

DELAY AND OUTPUT TRANSITION TIME corresponding to min slew and load

Input Pin	Output	When Condition	Tin (ns)	Out Load (pf)	Delay (ns)	Tout (ns)
A2(HL)	ZN(LH)	A1&!B&!C	0.0100	0.0010	0.1728	0.1794
A2(LH)	ZN(HL)	A1&!B&!C	0.0100	0.0010	0.0761	0.0390
A1(HL)	ZN(LH)	A2&!B&!C	0.0100	0.0010	0.1297	0.1327
A1(LH)	ZN(HL)	A2&!B&!C	0.0100	0.0010	0.0652	0.0390
B(LH)	ZN(HL)	!A1&!A2&!C	0.0100	0.0010	0.1133	0.0688
B(LH)	ZN(HL)	!A1&A2&!C	0.0100	0.0010	0.0923	0.0599
B(LH)	ZN(HL)	A1&!A2&!C	0.0100	0.0010	0.1015	0.0782
B(HL)	ZN(LH)	!A1&!A2&!C	0.0100	0.0010	0.2020	0.1554
B(HL)	ZN(LH)	!A1&A2&!C	0.0100	0.0010	0.2278	0.1462
B(HL)	ZN(LH)	A1&!A2&!C	0.0100	0.0010	0.2833	0.1878
C(HL)	ZN(LH)	!A1&!A2&!B	0.0100	0.0010	0.2267	0.1555
C(HL)	ZN(LH)	!A1&A2&!B	0.0100	0.0010	0.2525	0.1463
C(HL)	ZN(LH)	A1&!A2&!B	0.0100	0.0010	0.3080	0.1878
C(LH)	ZN(HL)	!A1&!A2&!B	0.0100	0.0010	0.1243	0.0817
C(LH)	ZN(HL)	!A1&A2&!B	0.0100	0.0010	0.0951	0.0700
C(LH)	ZN(HL)	A1&!A2&!B	0.0100	0.0010	0.1065	0.0906

DYNAMIC ENERGY

Input Pin	When Condition	Tin (ns)	Output	Out Load (pf)	Energy (uW/MHz)
C	!A1&!A2&!B	0.0100	ZN(LH)	0.0010	0.4575
C	!A1&A2&!B	0.0100	ZN(LH)	0.0010	0.4163
C	A1&!A2&!B	0.0100	ZN(LH)	0.0010	0.4933
C	!A1&!A2&!B	0.0100	ZN(HL)	0.0010	0.1401
C	!A1&A2&!B	0.0100	ZN(HL)	0.0010	0.1286
C	A1&!A2&!B	0.0100	ZN(HL)	0.0010	0.1285
A1	A2&!B&!C	0.0100	ZN(LH)	0.0010	0.2638
B	!A1&!A2&!C	0.0100	ZN(HL)	0.0010	0.0979
B	!A1&A2&!C	0.0100	ZN(HL)	0.0010	0.0856
B	A1&!A2&!C	0.0100	ZN(HL)	0.0010	0.0856
A2	A1&!B&!C	0.0100	ZN(LH)	0.0010	0.3311
A1	A2&!B&!C	0.0100	ZN(HL)	0.0010	0.0081
B	!A1&!A2&!C	0.0100	ZN(LH)	0.0010	0.4030
B	!A1&A2&!C	0.0100	ZN(LH)	0.0010	0.3618
B	A1&!A2&!C	0.0100	ZN(LH)	0.0010	0.4389
A2	A1&!B&!C	0.0100	ZN(HL)	0.0010	0.0080
B(HL)	!A1&!A2&C	0.0100	n/a	n/a	0.0490
B(HL)	!A1&A2&C	0.0100	n/a	n/a	0.0488
B(HL)	A1&!A2&C	0.0100	n/a	n/a	0.0488
B(HL)	A1&A2&!C	0.0100	n/a	n/a	0.0739
B(HL)	A1&A2&C	0.0100	n/a	n/a	0.0399
A2(LH)	!A1&!B&!C	0.0100	n/a	n/a	-0.0740

continues on next page

Table 11 – continued from previous page

A2(LH)	!A1&!B&C	0.0100	n/a	n/a	-0.0177
A2(LH)	!A1&B&!C	0.0100	n/a	n/a	-0.0176
A2(LH)	!A1&B&C	0.0100	n/a	n/a	-0.0176
A2(LH)	A1&!B&C	0.0100	n/a	n/a	-0.0189
A2(LH)	A1&B&!C	0.0100	n/a	n/a	-0.0185
A2(LH)	A1&B&C	0.0100	n/a	n/a	-0.0185
A1(LH)	!A2&!B&!C	0.0100	n/a	n/a	-0.0567
A1(LH)	!A2&!B&C	0.0100	n/a	n/a	-0.0177
A1(LH)	!A2&B&!C	0.0100	n/a	n/a	-0.0176
A1(LH)	!A2&B&C	0.0100	n/a	n/a	-0.0176
A1(LH)	A2&!B&C	0.0100	n/a	n/a	-0.0189
A1(LH)	A2&B&!C	0.0100	n/a	n/a	-0.0185
A1(LH)	A2&B&C	0.0100	n/a	n/a	-0.0185
C(HL)	!A1&!A2&B	0.0100	n/a	n/a	0.0735
C(HL)	!A1&A2&B	0.0100	n/a	n/a	0.0735
C(HL)	A1&!A2&B	0.0100	n/a	n/a	0.0734
C(HL)	A1&A2&!B	0.0100	n/a	n/a	0.0739
C(HL)	A1&A2&B	0.0100	n/a	n/a	0.0735
A2(HL)	!A1&!B&!C	0.0100	n/a	n/a	0.0815
A2(HL)	!A1&!B&C	0.0100	n/a	n/a	0.0183
A2(HL)	!A1&B&!C	0.0100	n/a	n/a	0.0184
A2(HL)	!A1&B&C	0.0100	n/a	n/a	0.0184
A2(HL)	A1&!B&C	0.0100	n/a	n/a	0.1274
A2(HL)	A1&B&!C	0.0100	n/a	n/a	0.0784
A2(HL)	A1&B&C	0.0100	n/a	n/a	0.0784
B(LH)	!A1&!A2&C	0.0100	n/a	n/a	-0.0237
B(LH)	!A1&A2&C	0.0100	n/a	n/a	-0.0237
B(LH)	A1&!A2&C	0.0100	n/a	n/a	-0.0238
B(LH)	A1&A2&!C	0.0100	n/a	n/a	-0.0525
B(LH)	A1&A2&C	0.0100	n/a	n/a	-0.0420
A1(HL)	!A2&!B&!C	0.0100	n/a	n/a	0.0825
A1(HL)	!A2&!B&C	0.0100	n/a	n/a	0.0183
A1(HL)	!A2&B&!C	0.0100	n/a	n/a	0.0183
A1(HL)	!A2&B&C	0.0100	n/a	n/a	0.0183
A1(HL)	A2&!B&C	0.0100	n/a	n/a	0.1274
A1(HL)	A2&B&!C	0.0100	n/a	n/a	0.0783
A1(HL)	A2&B&C	0.0100	n/a	n/a	0.0783
C(LH)	!A1&!A2&B	0.0100	n/a	n/a	-0.0647
C(LH)	!A1&A2&B	0.0100	n/a	n/a	-0.0647
C(LH)	A1&!A2&B	0.0100	n/a	n/a	-0.0647
C(LH)	A1&A2&!B	0.0100	n/a	n/a	-0.0599
C(LH)	A1&A2&B	0.0100	n/a	n/a	-0.0678

LEAKAGE POWER

When Condition	Power (nW)
!A1&!A2&!B&!C	0.2027
!A1&A2&!B&!C	0.2032
A1&!A2&!B&!C	0.2830
!A1&!A2&!B&C	0.3312
!A1&!A2&B&!C	0.2605
!A1&!A2&B&C	0.2605
!A1&A2&!B&C	0.3355
!A1&A2&B&!C	0.2649
!A1&A2&B&C	0.2649
A1&!A2&!B&C	0.3355
A1&!A2&B&!C	0.2649
A1&!A2&B&C	0.2649
A1&A2&!B&!C	0.1558
A1&A2&!B&C	0.1560
A1&A2&B&!C	0.1560
A1&A2&B&C	0.1560

gf180mcu_fd_sc_mcu7t5v0__aoi211_4

gf180mcu_fd_sc_mcu7t5v0__aoi211_4 symbol

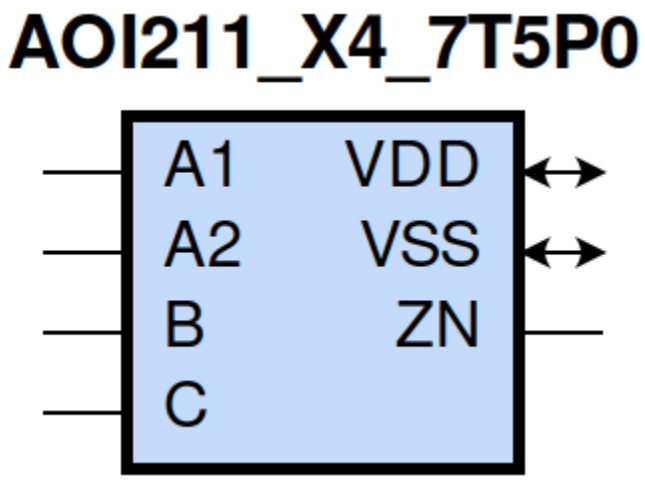

gf180mcu_fd_sc_mcu7t5v0__aoi211_4 schematic

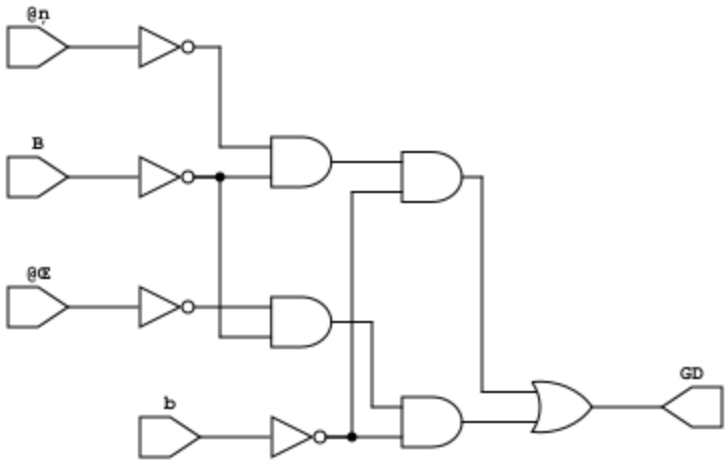

gf180mcu_fd_sc_mcu7t5v0__aoi211_4 layout

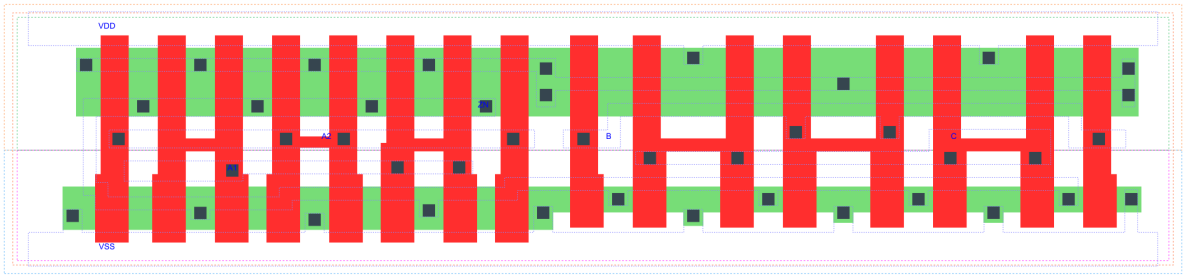

AOI211_X4 is a 2-input AND into 3-input NOR, NOR[AND(A1,A2),B,C], 4X drive strength

Attributes

Attribute	Value
area	79.027200 μm^2

OUTPUT FUNCTIONS

Output Pin	Function
ZN	(((!A1)&(!B)&(!C))|((!A2)&(!B)&(!C)))

TRUTH TABLE FOR ZN

A1	A2	B	C	ZN
0	?	0	0	1
?	0	0	0	1
1	1	?	?	0
?	?	1	?	0
?	?	?	1	0

FUNCTIONAL SCHEMATIC

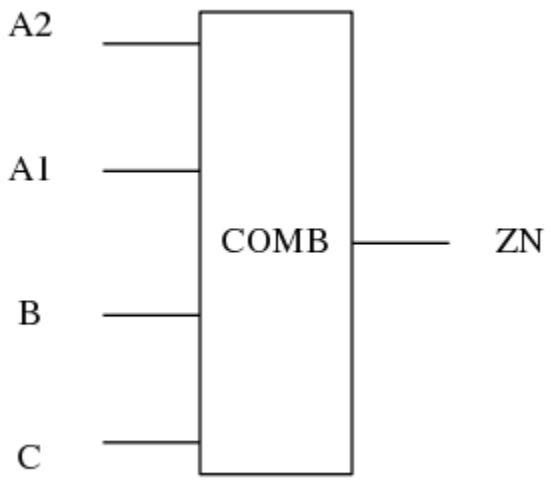

PIN CAPACITANCE (pf)

Pin	Type	Capacitance (pf)
A2	input	0.0195
A1	input	0.0191
B	input	0.0169
C	input	0.0163

DELAY AND OUTPUT TRANSITION TIME corresponding to min slew and load

Input Pin	Output	When Condition	Tin (ns)	Out Load (pf)	Delay (ns)	Tout (ns)
A2(HL)	ZN(LH)	A1&!B&!C	0.0100	0.0010	0.1630	0.1705
A2(LH)	ZN(HL)	A1&!B&!C	0.0100	0.0010	0.0788	0.0398
A1(HL)	ZN(LH)	A2&!B&!C	0.0100	0.0010	0.1211	0.1251
A1(LH)	ZN(HL)	A2&!B&!C	0.0100	0.0010	0.0672	0.0398
B(LH)	ZN(HL)	!A1&!A2&!C	0.0100	0.0010	0.1304	0.0787
B(LH)	ZN(HL)	!A1&A2&!C	0.0100	0.0010	0.1066	0.0682
B(LH)	ZN(HL)	A1&!A2&!C	0.0100	0.0010	0.1174	0.0888
B(HL)	ZN(LH)	!A1&!A2&!C	0.0100	0.0010	0.1919	0.1496
B(HL)	ZN(LH)	!A1&A2&!C	0.0100	0.0010	0.2156	0.1396
B(HL)	ZN(LH)	A1&!A2&!C	0.0100	0.0010	0.2689	0.1793
C(HL)	ZN(LH)	!A1&!A2&!B	0.0100	0.0010	0.2156	0.1494
C(HL)	ZN(LH)	!A1&A2&!B	0.0100	0.0010	0.2395	0.1396
C(HL)	ZN(LH)	A1&!A2&!B	0.0100	0.0010	0.2927	0.1794
C(LH)	ZN(HL)	!A1&!A2&!B	0.0100	0.0010	0.1451	0.0934
C(LH)	ZN(HL)	!A1&A2&!B	0.0100	0.0010	0.1122	0.0810
C(LH)	ZN(HL)	A1&!A2&!B	0.0100	0.0010	0.1257	0.1046

DYNAMIC ENERGY

Input Pin	When Condition	Tin (ns)	Output	Out Load (pf)	Energy (uW/MHz)
C	!A1&!A2&!B	0.0100	ZN(LH)	0.0010	0.9630
C	!A1&A2&!B	0.0100	ZN(LH)	0.0010	0.8748
C	A1&!A2&!B	0.0100	ZN(LH)	0.0010	1.0335
C	!A1&!A2&!B	0.0100	ZN(HL)	0.0010	0.2949
C	!A1&A2&!B	0.0100	ZN(HL)	0.0010	0.2700
C	A1&!A2&!B	0.0100	ZN(HL)	0.0010	0.2699
A1	A2&!B&!C	0.0100	ZN(LH)	0.0010	0.5601
B	!A1&!A2&!C	0.0100	ZN(HL)	0.0010	0.2108
B	!A1&A2&!C	0.0100	ZN(HL)	0.0010	0.1844
B	A1&!A2&!C	0.0100	ZN(HL)	0.0010	0.1847
A2	A1&!B&!C	0.0100	ZN(LH)	0.0010	0.7002
A1	A2&!B&!C	0.0100	ZN(HL)	0.0010	0.0160
B	!A1&!A2&!C	0.0100	ZN(LH)	0.0010	0.8463
B	!A1&A2&!C	0.0100	ZN(LH)	0.0010	0.7581
B	A1&!A2&!C	0.0100	ZN(LH)	0.0010	0.9167
A2	A1&!B&!C	0.0100	ZN(HL)	0.0010	0.0156
B(HL)	!A1&!A2&C	0.0100	n/a	n/a	0.0986
B(HL)	!A1&A2&C	0.0100	n/a	n/a	0.0982
B(HL)	A1&!A2&C	0.0100	n/a	n/a	0.0982
B(HL)	A1&A2&!C	0.0100	n/a	n/a	0.1578
B(HL)	A1&A2&C	0.0100	n/a	n/a	0.0866
A2(LH)	!A1&!B&!C	0.0100	n/a	n/a	-0.1583
A2(LH)	!A1&!B&C	0.0100	n/a	n/a	-0.0381
A2(LH)	!A1&B&!C	0.0100	n/a	n/a	-0.0379
A2(LH)	!A1&B&C	0.0100	n/a	n/a	-0.0379
A2(LH)	A1&!B&C	0.0100	n/a	n/a	-0.0409

continues on next page

Table 12 – continued from previous page

A2(LH)	A1&B&!C	0.0100	n/a	n/a	-0.0402
A2(LH)	A1&B&C	0.0100	n/a	n/a	-0.0402
A1(LH)	!A2&!B&!C	0.0100	n/a	n/a	-0.1175
A1(LH)	!A2&!B&C	0.0100	n/a	n/a	-0.0380
A1(LH)	!A2&B&!C	0.0100	n/a	n/a	-0.0378
A1(LH)	!A2&B&C	0.0100	n/a	n/a	-0.0378
A1(LH)	A2&!B&C	0.0100	n/a	n/a	-0.0408
A1(LH)	A2&B&!C	0.0100	n/a	n/a	-0.0401
A1(LH)	A2&B&C	0.0100	n/a	n/a	-0.0401
C(HL)	!A1&!A2&B	0.0100	n/a	n/a	0.1573
C(HL)	!A1&A2&B	0.0100	n/a	n/a	0.1573
C(HL)	A1&!A2&B	0.0100	n/a	n/a	0.1573
C(HL)	A1&A2&!B	0.0100	n/a	n/a	0.1576
C(HL)	A1&A2&B	0.0100	n/a	n/a	0.1573
A2(HL)	!A1&!B&!C	0.0100	n/a	n/a	0.1735
A2(HL)	!A1&!B&C	0.0100	n/a	n/a	0.0397
A2(HL)	!A1&B&!C	0.0100	n/a	n/a	0.0398
A2(HL)	!A1&B&C	0.0100	n/a	n/a	0.0398
A2(HL)	A1&!B&C	0.0100	n/a	n/a	0.2693
A2(HL)	A1&B&!C	0.0100	n/a	n/a	0.1706
A2(HL)	A1&B&C	0.0100	n/a	n/a	0.1706
B(LH)	!A1&!A2&C	0.0100	n/a	n/a	-0.0506
B(LH)	!A1&A2&C	0.0100	n/a	n/a	-0.0507
B(LH)	A1&!A2&C	0.0100	n/a	n/a	-0.0508
B(LH)	A1&A2&!C	0.0100	n/a	n/a	-0.1133
B(LH)	A1&A2&C	0.0100	n/a	n/a	-0.0908
A1(HL)	!A2&!B&!C	0.0100	n/a	n/a	0.1750
A1(HL)	!A2&!B&C	0.0100	n/a	n/a	0.0396
A1(HL)	!A2&B&!C	0.0100	n/a	n/a	0.0397
A1(HL)	!A2&B&C	0.0100	n/a	n/a	0.0397
A1(HL)	A2&!B&C	0.0100	n/a	n/a	0.2692
A1(HL)	A2&B&!C	0.0100	n/a	n/a	0.1705
A1(HL)	A2&B&C	0.0100	n/a	n/a	0.1705
C(LH)	!A1&!A2&B	0.0100	n/a	n/a	-0.1389
C(LH)	!A1&A2&B	0.0100	n/a	n/a	-0.1390
C(LH)	A1&!A2&B	0.0100	n/a	n/a	-0.1390
C(LH)	A1&A2&!B	0.0100	n/a	n/a	-0.1291
C(LH)	A1&A2&B	0.0100	n/a	n/a	-0.1458

LEAKAGE POWER

When Condition	Power (nW)
!A1&!A2&!B&!C	0.3570
!A1&A2&!B&!C	0.3579
A1&!A2&!B&!C	0.5176
!A1&!A2&!B&C	0.6125
!A1&!A2&B&!C	0.4711
!A1&!A2&B&C	0.4711
!A1&A2&!B&C	0.6213
!A1&A2&B&!C	0.4801
!A1&A2&B&C	0.4801
A1&!A2&!B&C	0.6213
A1&!A2&B&!C	0.4801
A1&!A2&B&C	0.4801
A1&A2&!B&!C	0.2620
A1&A2&!B&C	0.2621
A1&A2&B&!C	0.2621
A1&A2&B&C	0.2621

gf180mcu_fd_sc_mcu7t5v0__aoi22_1

gf180mcu_fd_sc_mcu7t5v0__aoi22_1 symbol

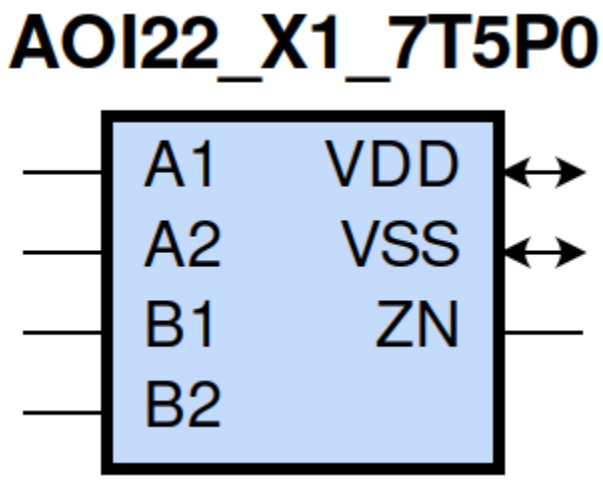

gf180mcu_fd_sc_mcu7t5v0__aoi22_1 schematic

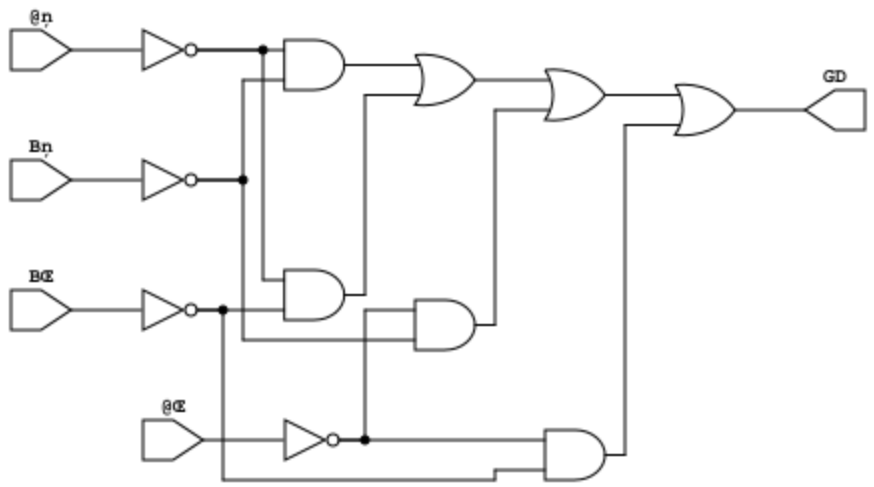

gf180mcu_fd_sc_mcu7t5v0__aoi22_1 layout

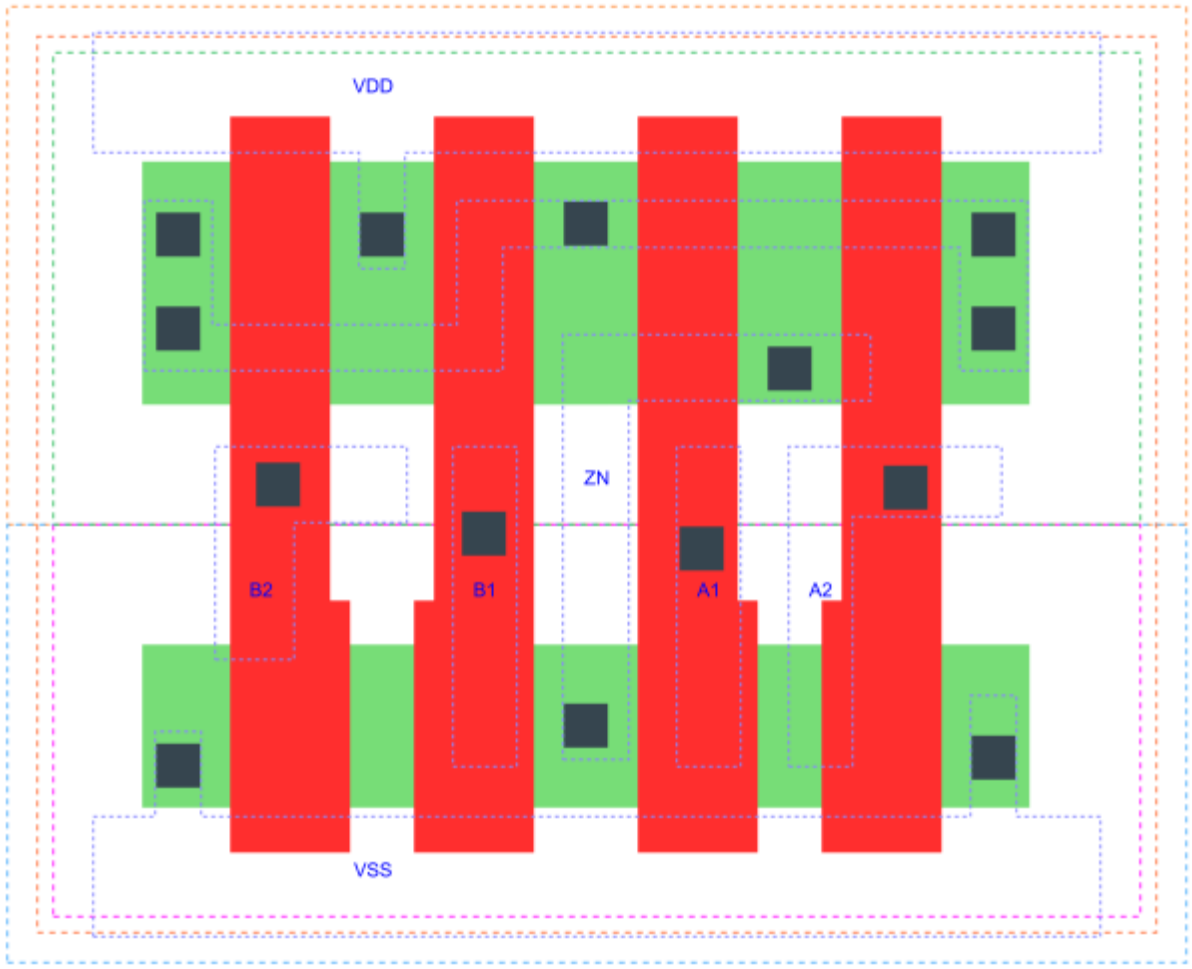

AOI22_X1 is a two 2-input AND into 2-input NOR, NOR[AND(A1,A2),AND(B1,B2)], 1X drive strength

Attributes

Attribute	Value
area	19.756800 μm^2

OUTPUT FUNCTIONS

Output Pin	Function
ZN	(((!A1)&(!B1))|((!A1)&(!B2))|((!A2)&(!B1))|((!A2)&(!B2)))

TRUTH TABLE FOR ZN

A1	A2	B1	B2	ZN
0	?	0	?	1
0	?	?	0	1
?	0	0	?	1
?	0	?	0	1
1	1	?	?	0
?	?	1	1	0

FUNCTIONAL SCHEMATIC

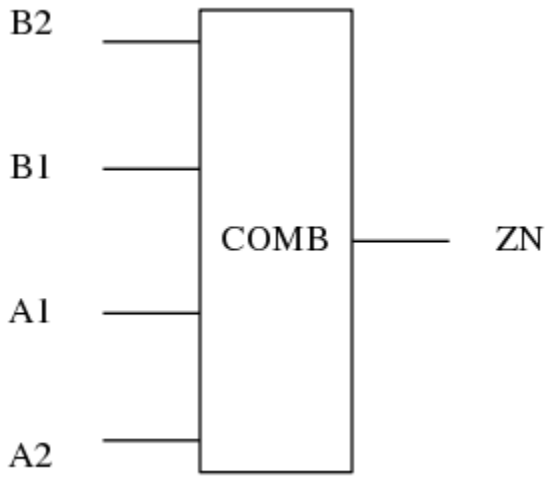

PIN CAPACITANCE (pf)

Pin	Type	Capacitance (pf)
B2	input	0.0046
B1	input	0.0047
A1	input	0.0049
A2	input	0.0049

DELAY AND OUTPUT TRANSITION TIME corresponding to min slew and load

Input Pin	Output	When Condition	Tin (ns)	Out Load (pf)	Delay (ns)	Tout (ns)
B2(HL)	ZN(LH)	!A1&!A2&B1	0.0100	0.0010	0.1623	0.1044
B2(HL)	ZN(LH)	!A1&A2&B1	0.0100	0.0010	0.1960	0.1150
B2(HL)	ZN(LH)	A1&!A2&B1	0.0100	0.0010	0.2337	0.1432
B2(LH)	ZN(HL)	!A1&!A2&B1	0.0100	0.0010	0.1330	0.0783
B2(LH)	ZN(HL)	!A1&A2&B1	0.0100	0.0010	0.1083	0.0684
B2(LH)	ZN(HL)	A1&!A2&B1	0.0100	0.0010	0.1187	0.0889
B1(HL)	ZN(LH)	!A1&!A2&B2	0.0100	0.0010	0.1376	0.0830
B1(HL)	ZN(LH)	!A1&A2&B2	0.0100	0.0010	0.1633	0.0866
B1(HL)	ZN(LH)	A1&!A2&B2	0.0100	0.0010	0.2029	0.1146
B1(LH)	ZN(HL)	!A1&!A2&B2	0.0100	0.0010	0.1216	0.0784
B1(LH)	ZN(HL)	!A1&A2&B2	0.0100	0.0010	0.0967	0.0685
B1(LH)	ZN(HL)	A1&!A2&B2	0.0100	0.0010	0.1072	0.0892
A1(HL)	ZN(LH)	A2&!B1&!B2	0.0100	0.0010	0.0815	0.0593
A1(HL)	ZN(LH)	A2&!B1&B2	0.0100	0.0010	0.0969	0.0808
A1(HL)	ZN(LH)	A2&B1&!B2	0.0100	0.0010	0.1349	0.1117
A1(LH)	ZN(HL)	A2&!B1&!B2	0.0100	0.0010	0.0630	0.0371
A1(LH)	ZN(HL)	A2&!B1&B2	0.0100	0.0010	0.0632	0.0371
A1(LH)	ZN(HL)	A2&B1&!B2	0.0100	0.0010	0.0682	0.0535
A2(HL)	ZN(LH)	A1&!B1&!B2	0.0100	0.0010	0.1048	0.0814
A2(HL)	ZN(LH)	A1&!B1&B2	0.0100	0.0010	0.1274	0.1111
A2(HL)	ZN(LH)	A1&B1&!B2	0.0100	0.0010	0.1649	0.1412
A2(LH)	ZN(HL)	A1&!B1&!B2	0.0100	0.0010	0.0743	0.0372
A2(LH)	ZN(HL)	A1&!B1&B2	0.0100	0.0010	0.0745	0.0372
A2(LH)	ZN(HL)	A1&B1&!B2	0.0100	0.0010	0.0796	0.0535

DYNAMIC ENERGY

Input Pin	When Condition	Tin (ns)	Output	Out Load (pf)	Energy (uW/MHz)
A1	A2&!B1&!B2	0.0100	ZN(LH)	0.0010	0.1198
A1	A2&!B1&B2	0.0100	ZN(LH)	0.0010	0.1198
A1	A2&B1&!B2	0.0100	ZN(LH)	0.0010	0.1622
B2	!A1&!A2&B1	0.0100	ZN(LH)	0.0010	0.2423
B2	!A1&A2&B1	0.0100	ZN(LH)	0.0010	0.2204
B2	A1&!A2&B1	0.0100	ZN(LH)	0.0010	0.2613
B1	!A1&!A2&B2	0.0100	ZN(LH)	0.0010	0.2053
B1	!A1&A2&B2	0.0100	ZN(LH)	0.0010	0.1832
B1	A1&!A2&B2	0.0100	ZN(LH)	0.0010	0.2258
A2	A1&!B1&!B2	0.0100	ZN(LH)	0.0010	0.1562
A2	A1&!B1&B2	0.0100	ZN(LH)	0.0010	0.1562
A2	A1&B1&!B2	0.0100	ZN(LH)	0.0010	0.1975
B1	!A1&!A2&B2	0.0100	ZN(HL)	0.0010	0.0644
B1	!A1&A2&B2	0.0100	ZN(HL)	0.0010	0.0580
B1	A1&!A2&B2	0.0100	ZN(HL)	0.0010	0.0580
A1	A2&!B1&!B2	0.0100	ZN(HL)	0.0010	0.0032
A1	A2&!B1&B2	0.0100	ZN(HL)	0.0010	0.0036
A1	A2&B1&!B2	0.0100	ZN(HL)	0.0010	0.0036

continues on next page

Table 13 – continued from previous page

B2	!A1&!A2&B1	0.0100	ZN(HL)	0.0010	0.0643
B2	!A1&A2&B1	0.0100	ZN(HL)	0.0010	0.0579
B2	A1&!A2&B1	0.0100	ZN(HL)	0.0010	0.0579
A2	A1&!B1&!B2	0.0100	ZN(HL)	0.0010	0.0032
A2	A1&!B1&B2	0.0100	ZN(HL)	0.0010	0.0036
A2	A1&B1&!B2	0.0100	ZN(HL)	0.0010	0.0036
A1(LH)	!A2&!B1&!B2	0.0100	n/a	n/a	-0.0294
A1(LH)	!A2&!B1&B2	0.0100	n/a	n/a	-0.0294
A1(LH)	!A2&B1&!B2	0.0100	n/a	n/a	-0.0294
A1(LH)	!A2&B1&B2	0.0100	n/a	n/a	-0.0100
A1(LH)	A2&B1&B2	0.0100	n/a	n/a	-0.0102
B2(LH)	!A1&!A2&!B1	0.0100	n/a	n/a	-0.0392
B2(LH)	!A1&A2&!B1	0.0100	n/a	n/a	-0.0392
B2(LH)	A1&!A2&!B1	0.0100	n/a	n/a	-0.0392
B2(LH)	A1&A2&!B1	0.0100	n/a	n/a	-0.0390
B2(LH)	A1&A2&B1	0.0100	n/a	n/a	-0.0317
A2(HL)	!A1&!B1&!B2	0.0100	n/a	n/a	0.0436
A2(HL)	!A1&!B1&B2	0.0100	n/a	n/a	0.0436
A2(HL)	!A1&B1&!B2	0.0100	n/a	n/a	0.0436
A2(HL)	!A1&B1&B2	0.0100	n/a	n/a	0.0101
A2(HL)	A1&B1&B2	0.0100	n/a	n/a	0.0567
B1(HL)	!A1&!A2&!B2	0.0100	n/a	n/a	0.0439
B1(HL)	!A1&A2&!B2	0.0100	n/a	n/a	0.0440
B1(HL)	A1&!A2&!B2	0.0100	n/a	n/a	0.0440
B1(HL)	A1&A2&!B2	0.0100	n/a	n/a	0.0392
B1(HL)	A1&A2&B2	0.0100	n/a	n/a	0.0392
B2(HL)	!A1&!A2&!B1	0.0100	n/a	n/a	0.0434
B2(HL)	!A1&A2&!B1	0.0100	n/a	n/a	0.0435
B2(HL)	A1&!A2&!B1	0.0100	n/a	n/a	0.0435
B2(HL)	A1&A2&!B1	0.0100	n/a	n/a	0.0393
B2(HL)	A1&A2&B1	0.0100	n/a	n/a	0.0392
A1(HL)	!A2&!B1&!B2	0.0100	n/a	n/a	0.0441
A1(HL)	!A2&!B1&B2	0.0100	n/a	n/a	0.0441
A1(HL)	!A2&B1&!B2	0.0100	n/a	n/a	0.0441
A1(HL)	!A2&B1&B2	0.0100	n/a	n/a	0.0101
A1(HL)	A2&B1&B2	0.0100	n/a	n/a	0.0567
B1(LH)	!A1&!A2&!B2	0.0100	n/a	n/a	-0.0288
B1(LH)	!A1&A2&!B2	0.0100	n/a	n/a	-0.0288
B1(LH)	A1&!A2&!B2	0.0100	n/a	n/a	-0.0288
B1(LH)	A1&A2&!B2	0.0100	n/a	n/a	-0.0390
B1(LH)	A1&A2&B2	0.0100	n/a	n/a	-0.0317
A2(LH)	!A1&!B1&!B2	0.0100	n/a	n/a	-0.0396
A2(LH)	!A1&!B1&B2	0.0100	n/a	n/a	-0.0396
A2(LH)	!A1&B1&!B2	0.0100	n/a	n/a	-0.0396
A2(LH)	!A1&B1&B2	0.0100	n/a	n/a	-0.0100
A2(LH)	A1&B1&B2	0.0100	n/a	n/a	-0.0102

LEAKAGE POWER

When Condition	Power (nW)
!A1&!A2&!B1&!B2	0.1004
!A1&!A2&!B1&B2	0.1007
!A1&!A2&B1&!B2	0.1406
!A1&A2&!B1&!B2	0.1007
!A1&A2&!B1&B2	0.1009
!A1&A2&B1&!B2	0.1408
A1&!A2&!B1&!B2	0.1406
A1&!A2&!B1&B2	0.1408
A1&!A2&B1&!B2	0.1807
!A1&!A2&B1&B2	0.1742
!A1&A2&B1&B2	0.1764
A1&!A2&B1&B2	0.1764
A1&A2&!B1&!B2	0.1030
A1&A2&!B1&B2	0.1030
A1&A2&B1&!B2	0.1030
A1&A2&B1&B2	0.1030

gf180mcu_fd_sc_mcu7t5v0__aoi22_2

gf180mcu_fd_sc_mcu7t5v0__aoi22_2 symbol

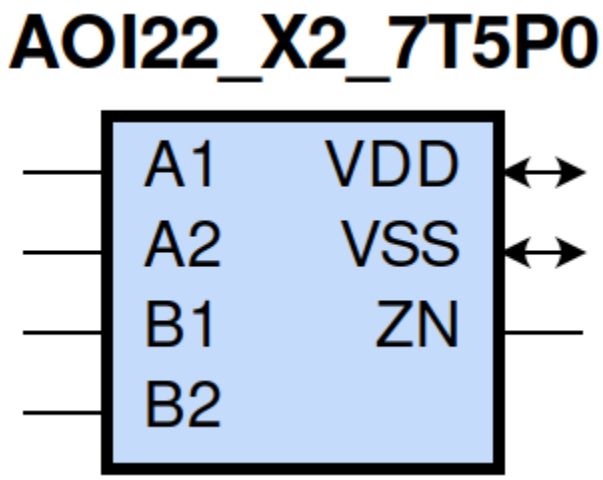

gf180mcu_fd_sc_mcu7t5v0__aoi22_2 schematic

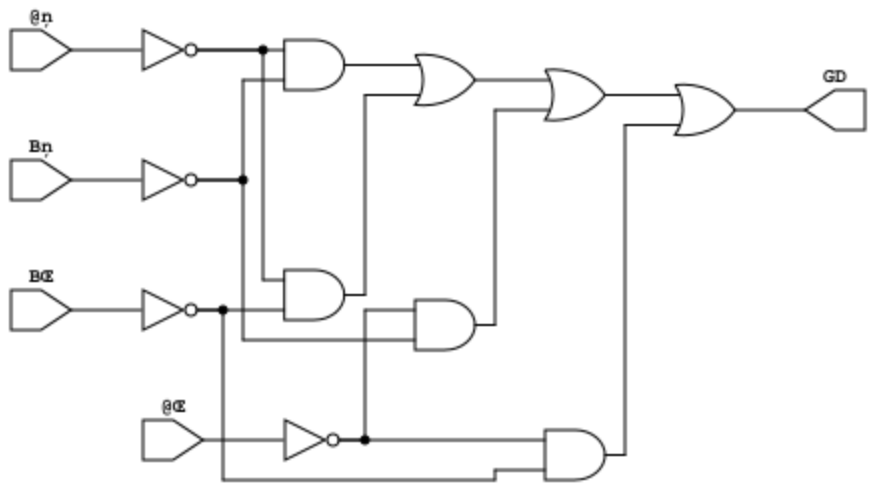

gf180mcu_fd_sc_mcu7t5v0__aoi22_2 layout

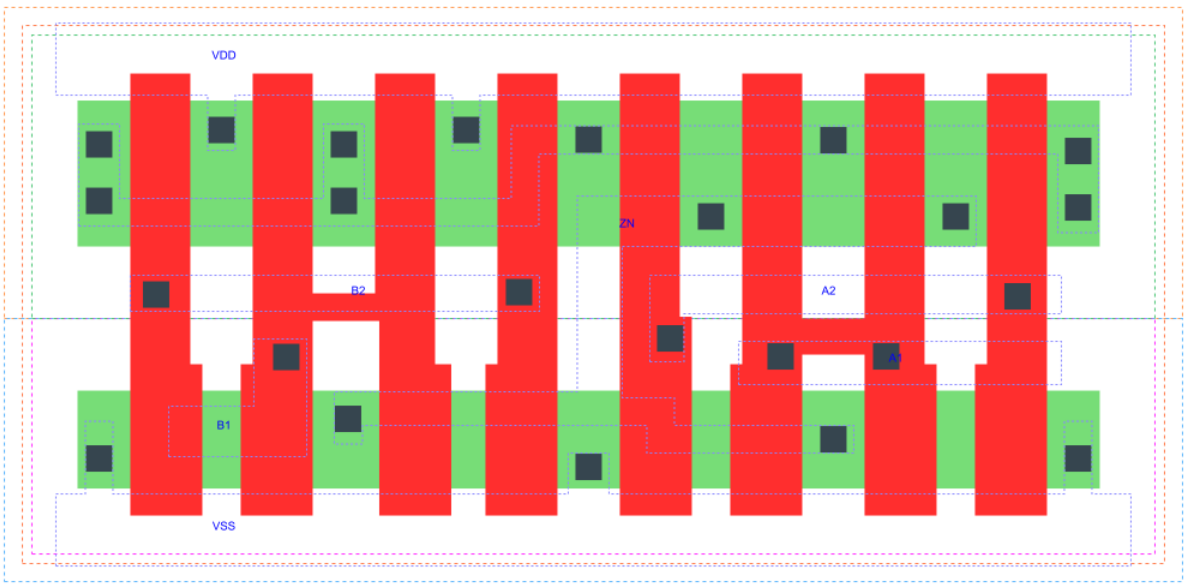

AOI22_X2 is a two 2-input AND into 2-input NOR, NOR[AND(A1,A2),AND(B1,B2)], 2X drive strength

Attributes

Attribute	Value
area	35.123200 μm^2

OUTPUT FUNCTIONS

Output Pin	Function
ZN	(((!A1)&(!B1))|((!A1)&(!B2))|((!A2)&(!B1))|((!A2)&(!B2)))

TRUTH TABLE FOR ZN

A1	A2	B1	B2	ZN
0	?	0	?	1
0	?	?	0	1
?	0	0	?	1
?	0	?	0	1
1	1	?	?	0
?	?	1	1	0

FUNCTIONAL SCHEMATIC

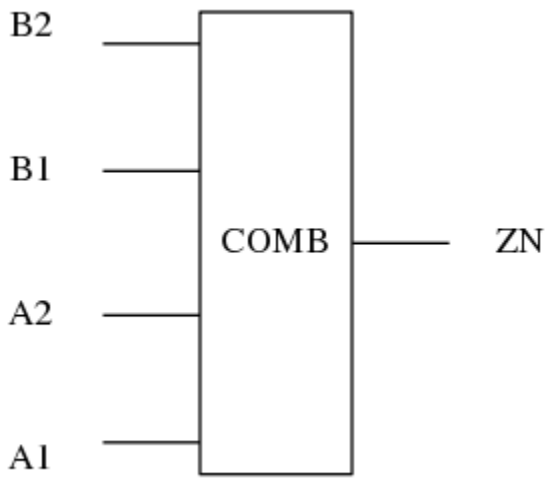

PIN CAPACITANCE (pf)

Pin	Type	Capacitance (pf)
B2	input	0.0093
B1	input	0.0090
A2	input	0.0099
A1	input	0.0095

DELAY AND OUTPUT TRANSITION TIME corresponding to min slew and load

Input Pin	Output	When Condition	Tin (ns)	Out Load (pf)	Delay (ns)	Tout (ns)
B2(HL)	ZN(LH)	!A1&!A2&B1	0.0100	0.0010	0.1544	0.0997
B2(HL)	ZN(LH)	!A1&A2&B1	0.0100	0.0010	0.1862	0.1093
B2(HL)	ZN(LH)	A1&!A2&B1	0.0100	0.0010	0.2238	0.1376
B2(LH)	ZN(HL)	!A1&!A2&B1	0.0100	0.0010	0.1273	0.0738
B2(LH)	ZN(HL)	!A1&A2&B1	0.0100	0.0010	0.1036	0.0638
B2(LH)	ZN(HL)	A1&!A2&B1	0.0100	0.0010	0.1137	0.0845
B1(HL)	ZN(LH)	!A1&!A2&B2	0.0100	0.0010	0.1299	0.0786
B1(HL)	ZN(LH)	!A1&A2&B2	0.0100	0.0010	0.1540	0.0815
B1(HL)	ZN(LH)	A1&!A2&B2	0.0100	0.0010	0.1936	0.1094
B1(LH)	ZN(HL)	!A1&!A2&B2	0.0100	0.0010	0.1161	0.0738
B1(LH)	ZN(HL)	!A1&A2&B2	0.0100	0.0010	0.0924	0.0644
B1(LH)	ZN(HL)	A1&!A2&B2	0.0100	0.0010	0.1025	0.0848
A2(HL)	ZN(LH)	A1&!B1&!B2	0.0100	0.0010	0.1014	0.0779
A2(HL)	ZN(LH)	A1&!B1&B2	0.0100	0.0010	0.1240	0.1066
A2(HL)	ZN(LH)	A1&B1&!B2	0.0100	0.0010	0.1610	0.1361
A2(LH)	ZN(HL)	A1&!B1&!B2	0.0100	0.0010	0.0717	0.0350
A2(LH)	ZN(HL)	A1&!B1&B2	0.0100	0.0010	0.0719	0.0350
A2(LH)	ZN(HL)	A1&B1&!B2	0.0100	0.0010	0.0769	0.0511
A1(HL)	ZN(LH)	A2&!B1&!B2	0.0100	0.0010	0.0781	0.0559
A1(HL)	ZN(LH)	A2&!B1&B2	0.0100	0.0010	0.0931	0.0765
A1(HL)	ZN(LH)	A2&B1&!B2	0.0100	0.0010	0.1309	0.1067
A1(LH)	ZN(HL)	A2&!B1&!B2	0.0100	0.0010	0.0604	0.0350
A1(LH)	ZN(HL)	A2&!B1&B2	0.0100	0.0010	0.0605	0.0349
A1(LH)	ZN(HL)	A2&B1&!B2	0.0100	0.0010	0.0654	0.0511

DYNAMIC ENERGY

Input Pin	When Condition	Tin (ns)	Output	Out Load (pf)	Energy (uW/MHz)
A1	A2&!B1&!B2	0.0100	ZN(LH)	0.0010	0.2495
A1	A2&!B1&B2	0.0100	ZN(LH)	0.0010	0.2493
A1	A2&B1&!B2	0.0100	ZN(LH)	0.0010	0.3333
B2	!A1&!A2&B1	0.0100	ZN(LH)	0.0010	0.4887
B2	!A1&A2&B1	0.0100	ZN(LH)	0.0010	0.4447
B2	A1&!A2&B1	0.0100	ZN(LH)	0.0010	0.5268
B1	!A1&!A2&B2	0.0100	ZN(LH)	0.0010	0.4150
B1	!A1&A2&B2	0.0100	ZN(LH)	0.0010	0.3708
B1	A1&!A2&B2	0.0100	ZN(LH)	0.0010	0.4565
A2	A1&!B1&!B2	0.0100	ZN(LH)	0.0010	0.3229
A2	A1&!B1&B2	0.0100	ZN(LH)	0.0010	0.3229
A2	A1&B1&!B2	0.0100	ZN(LH)	0.0010	0.4044
B1	!A1&!A2&B2	0.0100	ZN(HL)	0.0010	0.1165
B1	!A1&A2&B2	0.0100	ZN(HL)	0.0010	0.1035

continues on next page

Table 14 – continued from previous page

B1	A1&!A2&B2	0.0100	ZN(HL)	0.0010	0.1035
A1	A2&!B1&!B2	0.0100	ZN(HL)	0.0010	0.0065
A1	A2&!B1&B2	0.0100	ZN(HL)	0.0010	0.0072
A1	A2&B1&!B2	0.0100	ZN(HL)	0.0010	0.0072
B2	!A1&!A2&B1	0.0100	ZN(HL)	0.0010	0.1165
B2	!A1&A2&B1	0.0100	ZN(HL)	0.0010	0.1037
B2	A1&!A2&B1	0.0100	ZN(HL)	0.0010	0.1037
A2	A1&!B1&!B2	0.0100	ZN(HL)	0.0010	0.0062
A2	A1&!B1&B2	0.0100	ZN(HL)	0.0010	0.0070
A2	A1&B1&!B2	0.0100	ZN(HL)	0.0010	0.0070
A1(LH)	!A2&!B1&!B2	0.0100	n/a	n/a	-0.0585
A1(LH)	!A2&!B1&B2	0.0100	n/a	n/a	-0.0585
A1(LH)	!A2&B1&!B2	0.0100	n/a	n/a	-0.0585
A1(LH)	!A2&B1&B2	0.0100	n/a	n/a	-0.0195
A1(LH)	A2&B1&B2	0.0100	n/a	n/a	-0.0202
B2(LH)	!A1&!A2&!B1	0.0100	n/a	n/a	-0.0784
B2(LH)	!A1&A2&!B1	0.0100	n/a	n/a	-0.0783
B2(LH)	A1&!A2&!B1	0.0100	n/a	n/a	-0.0783
B2(LH)	A1&A2&!B1	0.0100	n/a	n/a	-0.0781
B2(LH)	A1&A2&B1	0.0100	n/a	n/a	-0.0624
A2(HL)	!A1&!B1&!B2	0.0100	n/a	n/a	0.0871
A2(HL)	!A1&!B1&B2	0.0100	n/a	n/a	0.0870
A2(HL)	!A1&B1&!B2	0.0100	n/a	n/a	0.0870
A2(HL)	!A1&B1&B2	0.0100	n/a	n/a	0.0200
A2(HL)	A1&B1&B2	0.0100	n/a	n/a	0.1014
B1(HL)	!A1&!A2&!B2	0.0100	n/a	n/a	0.0876
B1(HL)	!A1&A2&!B2	0.0100	n/a	n/a	0.0876
B1(HL)	A1&!A2&!B2	0.0100	n/a	n/a	0.0876
B1(HL)	A1&A2&!B2	0.0100	n/a	n/a	0.0784
B1(HL)	A1&A2&B2	0.0100	n/a	n/a	0.0784
B2(HL)	!A1&!A2&!B1	0.0100	n/a	n/a	0.0868
B2(HL)	!A1&A2&!B1	0.0100	n/a	n/a	0.0869
B2(HL)	A1&!A2&!B1	0.0100	n/a	n/a	0.0869
B2(HL)	A1&A2&!B1	0.0100	n/a	n/a	0.0786
B2(HL)	A1&A2&B1	0.0100	n/a	n/a	0.0784
A1(HL)	!A2&!B1&!B2	0.0100	n/a	n/a	0.0880
A1(HL)	!A2&!B1&B2	0.0100	n/a	n/a	0.0878
A1(HL)	!A2&B1&!B2	0.0100	n/a	n/a	0.0878
A1(HL)	!A2&B1&B2	0.0100	n/a	n/a	0.0200
A1(HL)	A2&B1&B2	0.0100	n/a	n/a	0.1014
B1(LH)	!A1&!A2&!B2	0.0100	n/a	n/a	-0.0586
B1(LH)	!A1&A2&!B2	0.0100	n/a	n/a	-0.0586
B1(LH)	A1&!A2&!B2	0.0100	n/a	n/a	-0.0586
B1(LH)	A1&A2&!B2	0.0100	n/a	n/a	-0.0781
B1(LH)	A1&A2&B2	0.0100	n/a	n/a	-0.0625
A2(LH)	!A1&!B1&!B2	0.0100	n/a	n/a	-0.0790
A2(LH)	!A1&!B1&B2	0.0100	n/a	n/a	-0.0789
A2(LH)	!A1&B1&!B2	0.0100	n/a	n/a	-0.0789
A2(LH)	!A1&B1&B2	0.0100	n/a	n/a	-0.0195
A2(LH)	A1&B1&B2	0.0100	n/a	n/a	-0.0202

LEAKAGE POWER

When Condition	Power (nW)
!A1&!A2&!B1&!B2	0.1509
!A1&!A2&!B1&B2	0.1513
!A1&!A2&B1&!B2	0.2312
!A1&A2&!B1&!B2	0.1513
!A1&A2&!B1&B2	0.1518
!A1&A2&B1&!B2	0.2316
A1&!A2&!B1&!B2	0.2312
A1&!A2&!B1&B2	0.2316
A1&!A2&B1&!B2	0.3114
!A1&!A2&B1&B2	0.2985
!A1&A2&B1&B2	0.3028
A1&!A2&B1&B2	0.3028
A1&A2&!B1&!B2	0.1560
A1&A2&!B1&B2	0.1560
A1&A2&B1&!B2	0.1560
A1&A2&B1&B2	0.1560

gf180mcu_fd_sc_mcu7t5v0__aoi22_4

gf180mcu_fd_sc_mcu7t5v0__aoi22_4 symbol

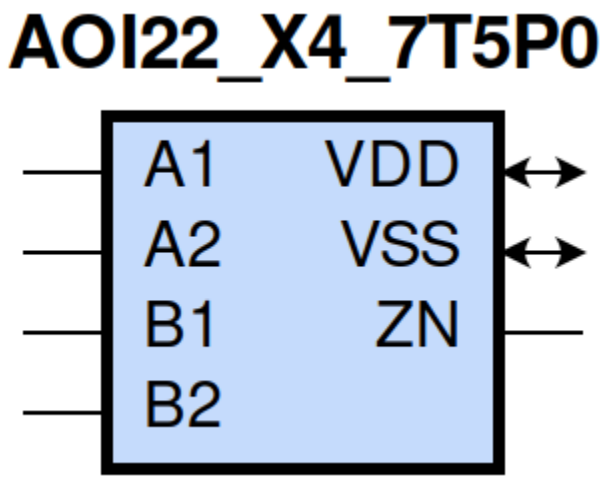

gf180mcu_fd_sc_mcu7t5v0__aoi22_4 schematic

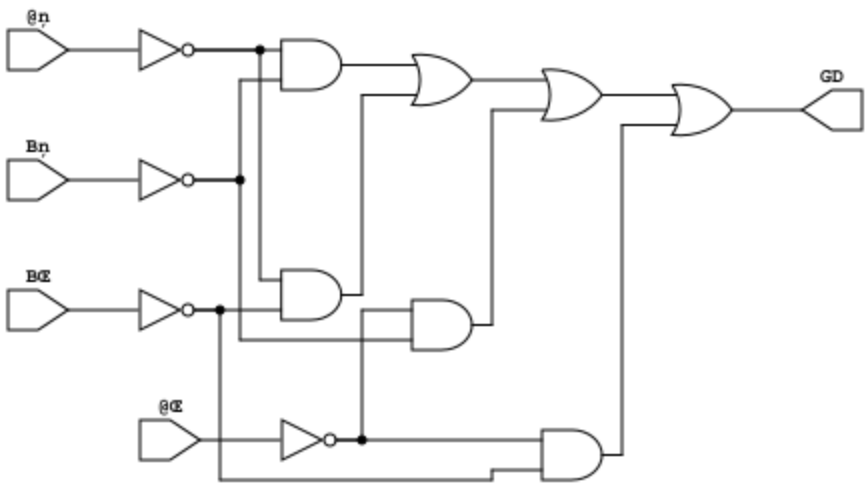

gf180mcu_fd_sc_mcu7t5v0__aoi22_4 layout

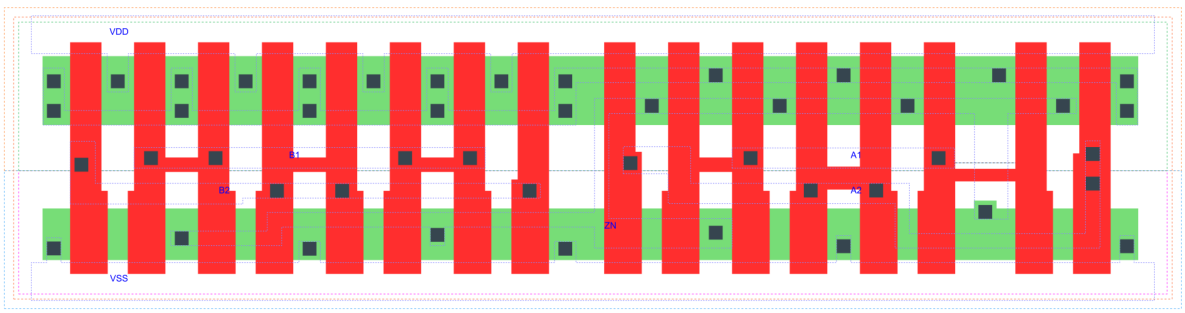

AOI22_X4 is a two 2-input AND into 2-input NOR, NOR[AND(A1,A2),AND(B1,B2)], 4X drive strength

Attributes

Attribute	Value
area	70.246400 μm^2

OUTPUT FUNCTIONS

Output Pin	Function
ZN	(((!A1)&(!B1))|((!A1)&(!B2))|((!A2)&(!B1))|((!A2)&(!B2)))

TRUTH TABLE FOR ZN

A1	A2	B1	B2	ZN
0	?	0	?	1
0	?	?	0	1
?	0	0	?	1
?	0	?	0	1
1	1	?	?	0
?	?	1	1	0

FUNCTIONAL SCHEMATIC

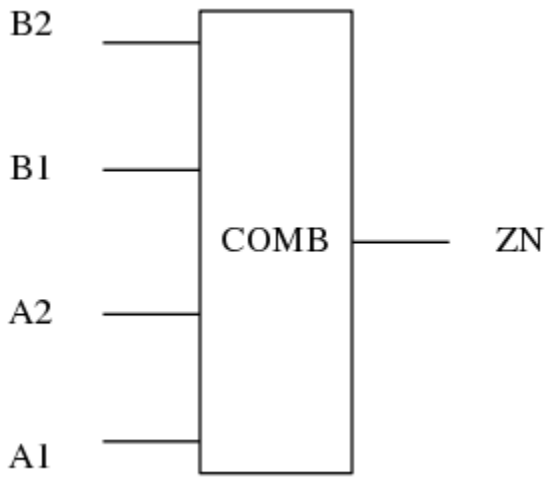

PIN CAPACITANCE (pf)

Pin	Type	Capacitance (pf)
B2	input	0.0184
B1	input	0.0179
A2	input	0.0188
A1	input	0.0180

DELAY AND OUTPUT TRANSITION TIME corresponding to min slew and load

Input Pin	Output	When Condition	Tin (ns)	Out Load (pf)	Delay (ns)	Tout (ns)
B2(HL)	ZN(LH)	!A1&!A2&B1	0.0100	0.0010	0.1658	0.1063
B2(HL)	ZN(LH)	!A1&A2&B1	0.0100	0.0010	0.2007	0.1176
B2(HL)	ZN(LH)	A1&!A2&B1	0.0100	0.0010	0.2430	0.1494
B2(LH)	ZN(HL)	!A1&!A2&B1	0.0100	0.0010	0.1185	0.0692
B2(LH)	ZN(HL)	!A1&A2&B1	0.0100	0.0010	0.0964	0.0601
B2(LH)	ZN(HL)	A1&!A2&B1	0.0100	0.0010	0.1061	0.0807
B1(HL)	ZN(LH)	!A1&!A2&B2	0.0100	0.0010	0.1375	0.0823
B1(HL)	ZN(LH)	!A1&A2&B2	0.0100	0.0010	0.1636	0.0859
B1(HL)	ZN(LH)	A1&!A2&B2	0.0100	0.0010	0.2083	0.1173
B1(LH)	ZN(HL)	!A1&!A2&B2	0.0100	0.0010	0.1071	0.0697
B1(LH)	ZN(HL)	!A1&A2&B2	0.0100	0.0010	0.0849	0.0605
B1(LH)	ZN(HL)	A1&!A2&B2	0.0100	0.0010	0.0947	0.0812
A2(HL)	ZN(LH)	A1&!B1&!B2	0.0100	0.0010	0.1097	0.0839
A2(HL)	ZN(LH)	A1&!B1&B2	0.0100	0.0010	0.1342	0.1146
A2(HL)	ZN(LH)	A1&B1&!B2	0.0100	0.0010	0.1763	0.1481
A2(LH)	ZN(HL)	A1&!B1&!B2	0.0100	0.0010	0.0685	0.0334
A2(LH)	ZN(HL)	A1&!B1&B2	0.0100	0.0010	0.0687	0.0334
A2(LH)	ZN(HL)	A1&B1&!B2	0.0100	0.0010	0.0735	0.0497
A1(HL)	ZN(LH)	A2&!B1&!B2	0.0100	0.0010	0.0834	0.0591
A1(HL)	ZN(LH)	A2&!B1&B2	0.0100	0.0010	0.0993	0.0808
A1(HL)	ZN(LH)	A2&B1&!B2	0.0100	0.0010	0.1423	0.1150
A1(LH)	ZN(HL)	A2&!B1&!B2	0.0100	0.0010	0.0572	0.0335
A1(LH)	ZN(HL)	A2&!B1&B2	0.0100	0.0010	0.0573	0.0335
A1(LH)	ZN(HL)	A2&B1&!B2	0.0100	0.0010	0.0621	0.0497

DYNAMIC ENERGY

Input Pin	When Condition	Tin (ns)	Output	Out Load (pf)	Energy (uW/MHz)
A1	A2&!B1&!B2	0.0100	ZN(LH)	0.0010	0.4972
A1	A2&!B1&B2	0.0100	ZN(LH)	0.0010	0.4971
A1	A2&B1&!B2	0.0100	ZN(LH)	0.0010	0.6680
B2	!A1&!A2&B1	0.0100	ZN(LH)	0.0010	0.9612
B2	!A1&A2&B1	0.0100	ZN(LH)	0.0010	0.8820
B2	A1&!A2&B1	0.0100	ZN(LH)	0.0010	1.0473
B1	!A1&!A2&B2	0.0100	ZN(LH)	0.0010	0.8097
B1	!A1&A2&B2	0.0100	ZN(LH)	0.0010	0.7300
B1	A1&!A2&B2	0.0100	ZN(LH)	0.0010	0.9031
A2	A1&!B1&!B2	0.0100	ZN(LH)	0.0010	0.6456
A2	A1&!B1&B2	0.0100	ZN(LH)	0.0010	0.6457
A2	A1&B1&!B2	0.0100	ZN(LH)	0.0010	0.8113
B1	!A1&!A2&B2	0.0100	ZN(HL)	0.0010	0.2163
B1	!A1&A2&B2	0.0100	ZN(HL)	0.0010	0.1928
B1	A1&!A2&B2	0.0100	ZN(HL)	0.0010	0.1929
A1	A2&!B1&!B2	0.0100	ZN(HL)	0.0010	0.0133
A1	A2&!B1&B2	0.0100	ZN(HL)	0.0010	0.0145
A1	A2&B1&!B2	0.0100	ZN(HL)	0.0010	0.0144

continues on next page

Table 15 – continued from previous page

B2	!A1&!A2&B1	0.0100	ZN(HL)	0.0010	0.2159
B2	!A1&A2&B1	0.0100	ZN(HL)	0.0010	0.1928
B2	A1&!A2&B1	0.0100	ZN(HL)	0.0010	0.1929
A2	A1&!B1&!B2	0.0100	ZN(HL)	0.0010	0.0131
A2	A1&!B1&B2	0.0100	ZN(HL)	0.0010	0.0143
A2	A1&B1&!B2	0.0100	ZN(HL)	0.0010	0.0144
A1(LH)	!A2&!B1&!B2	0.0100	n/a	n/a	-0.1009
A1(LH)	!A2&!B1&B2	0.0100	n/a	n/a	-0.1009
A1(LH)	!A2&B1&!B2	0.0100	n/a	n/a	-0.1009
A1(LH)	!A2&B1&B2	0.0100	n/a	n/a	-0.0351
A1(LH)	A2&B1&B2	0.0100	n/a	n/a	-0.0359
B2(LH)	!A1&!A2&!B1	0.0100	n/a	n/a	-0.1410
B2(LH)	!A1&A2&!B1	0.0100	n/a	n/a	-0.1407
B2(LH)	A1&!A2&!B1	0.0100	n/a	n/a	-0.1406
B2(LH)	A1&A2&!B1	0.0100	n/a	n/a	-0.1404
B2(LH)	A1&A2&B1	0.0100	n/a	n/a	-0.1120
A2(HL)	!A1&!B1&!B2	0.0100	n/a	n/a	0.1586
A2(HL)	!A1&!B1&B2	0.0100	n/a	n/a	0.1581
A2(HL)	!A1&B1&!B2	0.0100	n/a	n/a	0.1581
A2(HL)	!A1&B1&B2	0.0100	n/a	n/a	0.0357
A2(HL)	A1&B1&B2	0.0100	n/a	n/a	0.1893
B1(HL)	!A1&!A2&!B2	0.0100	n/a	n/a	0.1591
B1(HL)	!A1&A2&!B2	0.0100	n/a	n/a	0.1591
B1(HL)	A1&!A2&!B2	0.0100	n/a	n/a	0.1591
B1(HL)	A1&A2&!B2	0.0100	n/a	n/a	0.1409
B1(HL)	A1&A2&B2	0.0100	n/a	n/a	0.1395
B2(HL)	!A1&!A2&!B1	0.0100	n/a	n/a	0.1578
B2(HL)	!A1&A2&!B1	0.0100	n/a	n/a	0.1579
B2(HL)	A1&!A2&!B1	0.0100	n/a	n/a	0.1579
B2(HL)	A1&A2&!B1	0.0100	n/a	n/a	0.1411
B2(HL)	A1&A2&B1	0.0100	n/a	n/a	0.1393
A1(HL)	!A2&!B1&!B2	0.0100	n/a	n/a	0.1602
A1(HL)	!A2&!B1&B2	0.0100	n/a	n/a	0.1598
A1(HL)	!A2&B1&!B2	0.0100	n/a	n/a	0.1598
A1(HL)	!A2&B1&B2	0.0100	n/a	n/a	0.0357
A1(HL)	A2&B1&B2	0.0100	n/a	n/a	0.1892
B1(LH)	!A1&!A2&!B2	0.0100	n/a	n/a	-0.0994
B1(LH)	!A1&A2&!B2	0.0100	n/a	n/a	-0.0994
B1(LH)	A1&!A2&!B2	0.0100	n/a	n/a	-0.0994
B1(LH)	A1&A2&!B2	0.0100	n/a	n/a	-0.1403
B1(LH)	A1&A2&B2	0.0100	n/a	n/a	-0.1120
A2(LH)	!A1&!B1&!B2	0.0100	n/a	n/a	-0.1419
A2(LH)	!A1&!B1&B2	0.0100	n/a	n/a	-0.1417
A2(LH)	!A1&B1&!B2	0.0100	n/a	n/a	-0.1418
A2(LH)	!A1&B1&B2	0.0100	n/a	n/a	-0.0351
A2(LH)	A1&B1&B2	0.0100	n/a	n/a	-0.0360

LEAKAGE POWER

When Condition	Power (nW)
!A1&!A2&!B1&!B2	0.2518
!A1&!A2&!B1&B2	0.2527
!A1&!A2&B1&!B2	0.4123
!A1&A2&!B1&!B2	0.2527
!A1&A2&!B1&B2	0.2536
!A1&A2&B1&!B2	0.4132
A1&!A2&!B1&!B2	0.4123
A1&!A2&!B1&B2	0.4132
A1&!A2&B1&!B2	0.5728
!A1&!A2&B1&B2	0.5471
!A1&A2&B1&B2	0.5552
A1&!A2&B1&B2	0.5552
A1&A2&!B1&!B2	0.2613
A1&A2&!B1&B2	0.2613
A1&A2&B1&!B2	0.2613
A1&A2&B1&B2	0.2603

gf180mcu_fd_sc_mcu7t5v0__aoi221_1

gf180mcu_fd_sc_mcu7t5v0__aoi221_1 symbol

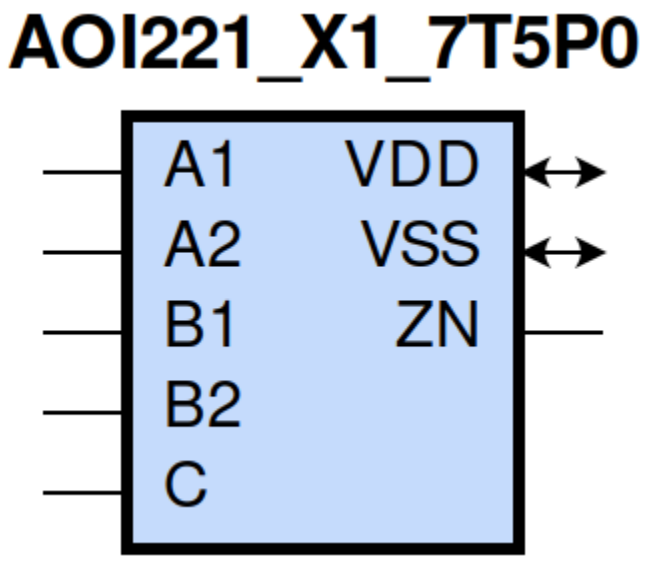

gf180mcu_fd_sc_mcu7t5v0__aoi221_1 schematic

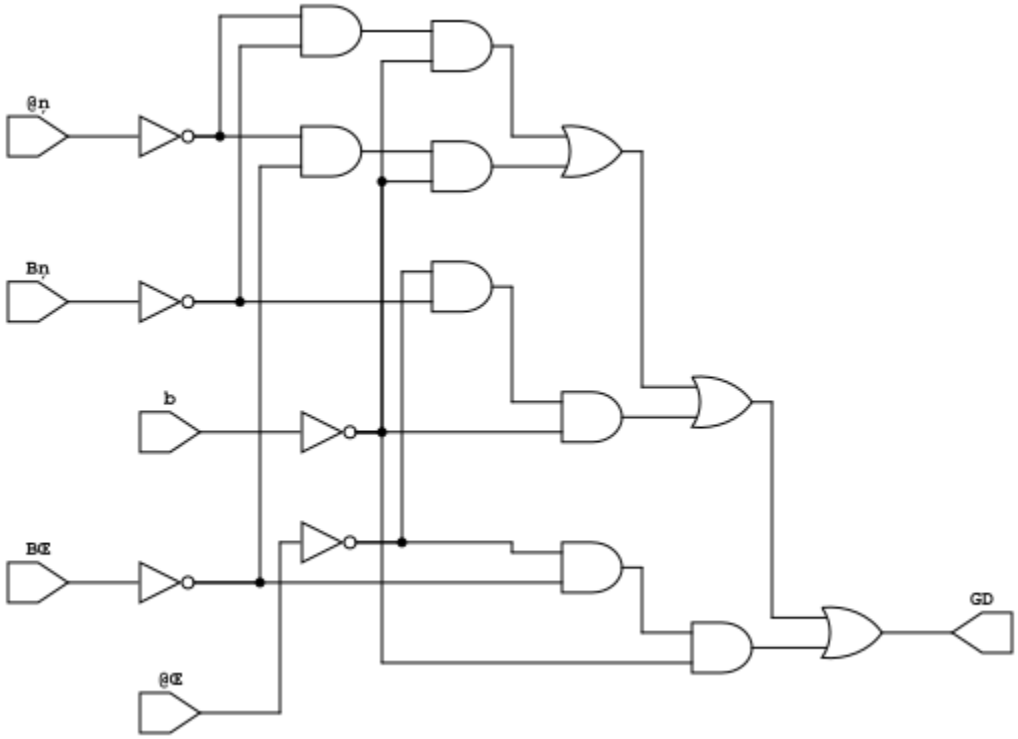

gf180mcu_fd_sc_mcu7t5v0__aoi221_1 layout

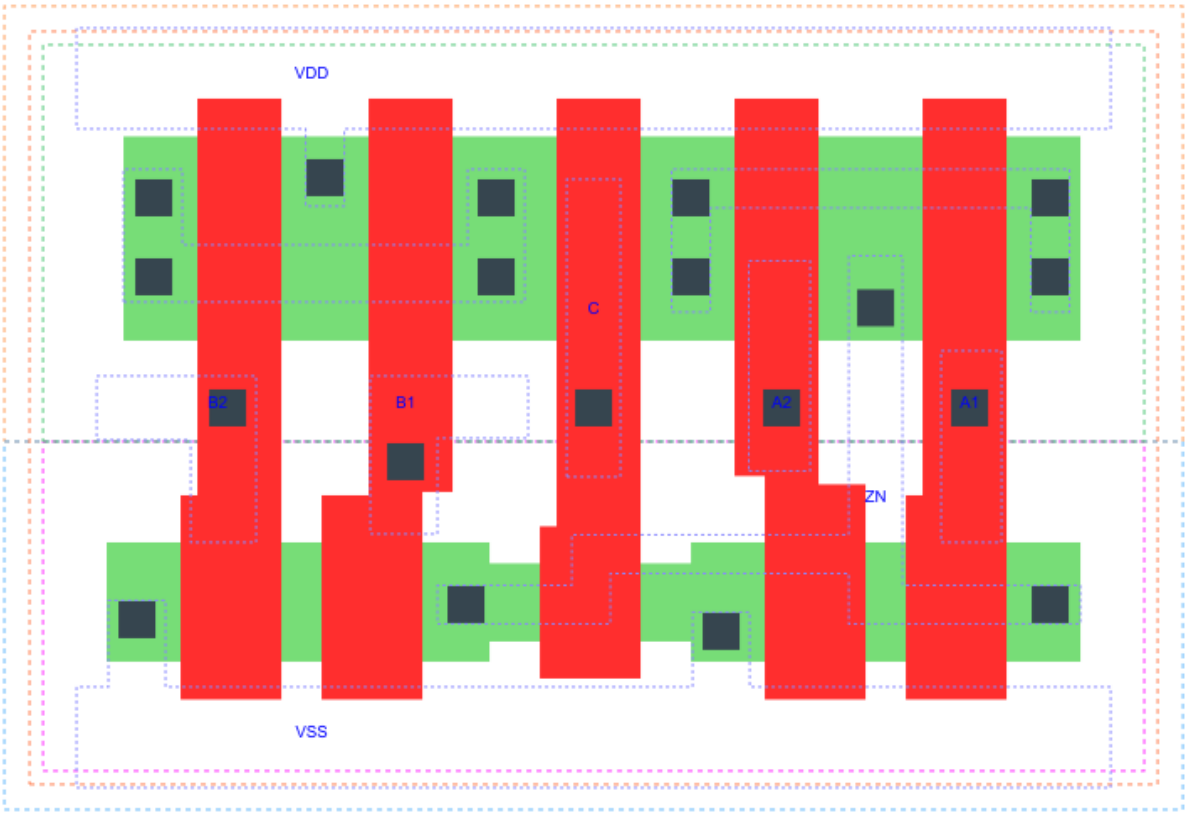

AOI221_X1 is a two 2-input AND into 3-input NOR, NOR[AND(A1,A2),AND(B1,B2),C], 1X drive strength

Attributes

Attribute	Value
area	24.147200 μm^2

OUTPUT FUNCTIONS

Output Pin	Function
ZN	(((!A1)&(!B1)&(!C))|((!A1)&(!B2)&(!C))|((!A2)&(!B1)&(!C))|((!A2)&(!B2)&(!C)))

TRUTH TABLE FOR ZN

A1	A2	B1	B2	C	ZN
0	?	0	?	0	1
0	?	?	0	0	1
?	0	0	?	0	1
?	0	?	0	0	1
1	1	?	?	?	0
?	?	1	1	?	0
?	?	?	?	1	0

FUNCTIONAL SCHEMATIC

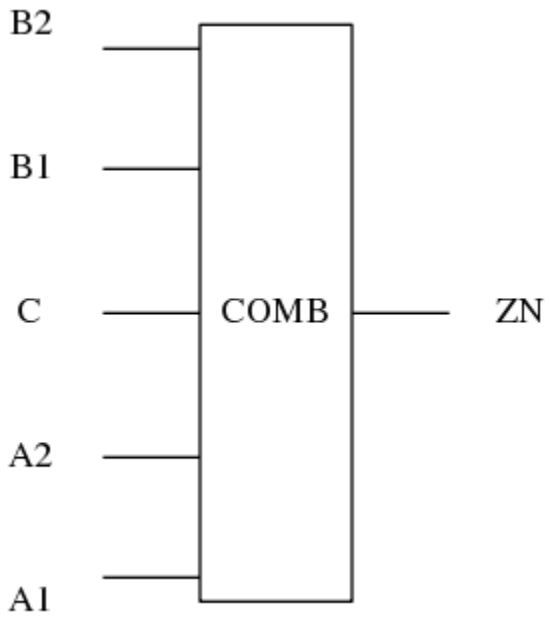

PIN CAPACITANCE (pf)

Pin	Type	Capacitance (pf)
B2	input	0.0043
B1	input	0.0045
C	input	0.0040
A2	input	0.0046
A1	input	0.0046

DELAY AND OUTPUT TRANSITION TIME corresponding to min slew and load

Input Pin	Output	When Condition	Tin (ns)	Out Load (pf)	Delay (ns)	Tout (ns)
B2(HL)	ZN(LH)	!A1&!A2&B1&!C	0.0100	0.0010	0.2966	0.1974
B2(HL)	ZN(LH)	!A1&A2&B1&!C	0.0100	0.0010	0.3327	0.1973
B2(HL)	ZN(LH)	A1&!A2&B1&!C	0.0100	0.0010	0.3794	0.2333
B2(LH)	ZN(HL)	!A1&!A2&B1&!C	0.0100	0.0010	0.1769	0.1178
B2(LH)	ZN(HL)	!A1&A2&B1&!C	0.0100	0.0010	0.1413	0.1034
B2(LH)	ZN(HL)	A1&!A2&B1&!C	0.0100	0.0010	0.1541	0.1250
B1(HL)	ZN(LH)	!A1&!A2&B2&!C	0.0100	0.0010	0.2648	0.1669
B1(HL)	ZN(LH)	!A1&A2&B2&!C	0.0100	0.0010	0.2952	0.1610
B1(HL)	ZN(LH)	A1&!A2&B2&!C	0.0100	0.0010	0.3429	0.1970
B1(LH)	ZN(HL)	!A1&!A2&B2&!C	0.0100	0.0010	0.1662	0.1175

continues on next page

Table 16 – continued from previous page

B1(LH)	ZN(HL)	!A1&A2&B2&!C	0.0100	0.0010	0.1302	0.1039
B1(LH)	ZN(HL)	A1&!A2&B2&!C	0.0100	0.0010	0.1431	0.1258
C(HL)	ZN(LH)	!A1&!A2&!B1&!B2	0.0100	0.0010	0.1707	0.1261
C(HL)	ZN(LH)	!A1&!A2&!B1&B2	0.0100	0.0010	0.2050	0.1665
C(HL)	ZN(LH)	!A1&!A2&B1&!B2	0.0100	0.0010	0.2446	0.1967
C(HL)	ZN(LH)	!A1&A2&!B1&!B2	0.0100	0.0010	0.1980	0.1286
C(HL)	ZN(LH)	!A1&A2&!B1&B2	0.0100	0.0010	0.2334	0.1611
C(HL)	ZN(LH)	!A1&A2&B1&!B2	0.0100	0.0010	0.2804	0.1971
C(HL)	ZN(LH)	A1&!A2&!B1&!B2	0.0100	0.0010	0.2375	0.1583
C(HL)	ZN(LH)	A1&!A2&!B1&B2	0.0100	0.0010	0.2805	0.1972
C(HL)	ZN(LH)	A1&!A2&B1&!B2	0.0100	0.0010	0.3272	0.2332
C(LH)	ZN(HL)	!A1&!A2&!B1&!B2	0.0100	0.0010	0.1362	0.0847
C(LH)	ZN(HL)	!A1&!A2&!B1&B2	0.0100	0.0010	0.1364	0.0850
C(LH)	ZN(HL)	!A1&!A2&B1&!B2	0.0100	0.0010	0.1459	0.1017
C(LH)	ZN(HL)	!A1&A2&!B1&!B2	0.0100	0.0010	0.1141	0.0746
C(LH)	ZN(HL)	!A1&A2&!B1&B2	0.0100	0.0010	0.1146	0.0745
C(LH)	ZN(HL)	!A1&A2&B1&!B2	0.0100	0.0010	0.1239	0.0921
C(LH)	ZN(HL)	A1&!A2&!B1&!B2	0.0100	0.0010	0.1235	0.0921
C(LH)	ZN(HL)	A1&!A2&!B1&B2	0.0100	0.0010	0.1238	0.0922
C(LH)	ZN(HL)	A1&!A2&B1&!B2	0.0100	0.0010	0.1342	0.1095
A2(HL)	ZN(LH)	A1&!B1&!B2&!C	0.0100	0.0010	0.1646	0.1549
A2(HL)	ZN(LH)	A1&!B1&B2&!C	0.0100	0.0010	0.1806	0.1884
A2(HL)	ZN(LH)	A1&B1&!B2&!C	0.0100	0.0010	0.2265	0.2281
A2(LH)	ZN(HL)	A1&!B1&!B2&!C	0.0100	0.0010	0.0927	0.0511
A2(LH)	ZN(HL)	A1&!B1&B2&!C	0.0100	0.0010	0.0927	0.0511
A2(LH)	ZN(HL)	A1&B1&!B2&!C	0.0100	0.0010	0.0986	0.0670
A1(HL)	ZN(LH)	A2&!B1&!B2&!C	0.0100	0.0010	0.1341	0.1231
A1(HL)	ZN(LH)	A2&!B1&B2&!C	0.0100	0.0010	0.1448	0.1489
A1(HL)	ZN(LH)	A2&B1&!B2&!C	0.0100	0.0010	0.1907	0.1897
A1(LH)	ZN(HL)	A2&!B1&!B2&!C	0.0100	0.0010	0.0818	0.0512
A1(LH)	ZN(HL)	A2&!B1&B2&!C	0.0100	0.0010	0.0818	0.0512
A1(LH)	ZN(HL)	A2&B1&!B2&!C	0.0100	0.0010	0.0876	0.0670

DYNAMIC ENERGY

Input Pin	When Condition	Tin (ns)	Output	Out Load (pf)	Energy (uW/MHz)
C	!A1&!A2&!B1&!B2	0.0100	ZN(LH)	0.0010	0.2096
C	!A1&!A2&!B1&B2	0.0100	ZN(LH)	0.0010	0.2096
C	!A1&!A2&B1&!B2	0.0100	ZN(LH)	0.0010	0.2446
C	!A1&A2&!B1&!B2	0.0100	ZN(LH)	0.0010	0.1878
C	!A1&A2&!B1&B2	0.0100	ZN(LH)	0.0010	0.1877
C	!A1&A2&B1&!B2	0.0100	ZN(LH)	0.0010	0.2227
C	A1&!A2&!B1&!B2	0.0100	ZN(LH)	0.0010	0.2229
C	A1&!A2&!B1&B2	0.0100	ZN(LH)	0.0010	0.2229
C	A1&!A2&B1&!B2	0.0100	ZN(LH)	0.0010	0.2577
C	!A1&!A2&!B1&!B2	0.0100	ZN(HL)	0.0010	0.0534
C	!A1&!A2&!B1&B2	0.0100	ZN(HL)	0.0010	0.0538

continues on next page

Table 17 – continued from previous page

C	!A1&!A2&B1&!B2	0.0100	ZN(HL)	0.0010	0.0539
C	!A1&A2&!B1&!B2	0.0100	ZN(HL)	0.0010	0.0468
C	!A1&A2&!B1&B2	0.0100	ZN(HL)	0.0010	0.0473
C	!A1&A2&B1&!B2	0.0100	ZN(HL)	0.0010	0.0474
C	A1&!A2&!B1&!B2	0.0100	ZN(HL)	0.0010	0.0469
C	A1&!A2&!B1&B2	0.0100	ZN(HL)	0.0010	0.0474
C	A1&!A2&B1&!B2	0.0100	ZN(HL)	0.0010	0.0474
A1	A2&!B1&!B2&!C	0.0100	ZN(LH)	0.0010	0.1440
A1	A2&!B1&B2&!C	0.0100	ZN(LH)	0.0010	0.1440
A1	A2&B1&!B2&!C	0.0100	ZN(LH)	0.0010	0.1794
B2	!A1&!A2&B1&!C	0.0100	ZN(LH)	0.0010	0.2959
B2	!A1&A2&B1&!C	0.0100	ZN(LH)	0.0010	0.2740
B2	A1&!A2&B1&!C	0.0100	ZN(LH)	0.0010	0.3089
B1	!A1&!A2&B2&!C	0.0100	ZN(LH)	0.0010	0.2659
B1	!A1&A2&B2&!C	0.0100	ZN(LH)	0.0010	0.2440
B1	A1&!A2&B2&!C	0.0100	ZN(LH)	0.0010	0.2796
A2	A1&!B1&!B2&!C	0.0100	ZN(LH)	0.0010	0.1740
A2	A1&!B1&B2&!C	0.0100	ZN(LH)	0.0010	0.1741
A2	A1&B1&!B2&!C	0.0100	ZN(LH)	0.0010	0.2088
B1	!A1&!A2&B2&!C	0.0100	ZN(HL)	0.0010	0.0925
B1	!A1&A2&B2&!C	0.0100	ZN(HL)	0.0010	0.0863
B1	A1&!A2&B2&!C	0.0100	ZN(HL)	0.0010	0.0863
A1	A2&!B1&!B2&!C	0.0100	ZN(HL)	0.0010	0.0070
A1	A2&!B1&B2&!C	0.0100	ZN(HL)	0.0010	0.0070
A1	A2&B1&!B2&!C	0.0100	ZN(HL)	0.0010	0.0069
B2	!A1&!A2&B1&!C	0.0100	ZN(HL)	0.0010	0.0926
B2	!A1&A2&B1&!C	0.0100	ZN(HL)	0.0010	0.0863
B2	A1&!A2&B1&!C	0.0100	ZN(HL)	0.0010	0.0863
A2	A1&!B1&!B2&!C	0.0100	ZN(HL)	0.0010	0.0069
A2	A1&!B1&B2&!C	0.0100	ZN(HL)	0.0010	0.0069
A2	A1&B1&!B2&!C	0.0100	ZN(HL)	0.0010	0.0069
A1(LH)	!A2&!B1&!B2&!C	0.0100	n/a	n/a	-0.0315
A1(LH)	!A2&!B1&B2&!C	0.0100	n/a	n/a	-0.0315
A1(LH)	!A2&B1&!B2&!C	0.0100	n/a	n/a	-0.0315
A1(LH)	!A2&!B1&!B2&C	0.0100	n/a	n/a	-0.0094
A1(LH)	!A2&!B1&B2&C	0.0100	n/a	n/a	-0.0094
A1(LH)	!A2&B1&!B2&C	0.0100	n/a	n/a	-0.0094
A1(LH)	!A2&B1&B2&!C	0.0100	n/a	n/a	-0.0094
A1(LH)	!A2&B1&B2&C	0.0100	n/a	n/a	-0.0094
A1(LH)	A2&!B1&!B2&C	0.0100	n/a	n/a	-0.0103
A1(LH)	A2&!B1&B2&C	0.0100	n/a	n/a	-0.0103
A1(LH)	A2&B1&!B2&C	0.0100	n/a	n/a	-0.0102
A1(LH)	A2&B1&B2&!C	0.0100	n/a	n/a	-0.0102
A1(LH)	A2&B1&B2&C	0.0100	n/a	n/a	-0.0103
C(HL)	!A1&!A2&B1&B2	0.0100	n/a	n/a	0.0406
C(HL)	!A1&A2&B1&B2	0.0100	n/a	n/a	0.0404
C(HL)	A1&!A2&B1&B2	0.0100	n/a	n/a	0.0404
C(HL)	A1&A2&!B1&!B2	0.0100	n/a	n/a	0.0392
C(HL)	A1&A2&!B1&B2	0.0100	n/a	n/a	0.0392
C(HL)	A1&A2&B1&!B2	0.0100	n/a	n/a	0.0392
C(HL)	A1&A2&B1&B2	0.0100	n/a	n/a	0.0220
B2(LH)	!A1&!A2&!B1&!C	0.0100	n/a	n/a	-0.0392

continues on next page

Table 17 – continued from previous page

B2(LH)	!A1&A2&!B1&!C	0.0100	n/a	n/a	-0.0392
B2(LH)	A1&!A2&!B1&!C	0.0100	n/a	n/a	-0.0392
B2(LH)	!A1&!A2&!B1&C	0.0100	n/a	n/a	-0.0390
B2(LH)	!A1&!A2&B1&C	0.0100	n/a	n/a	-0.0337
B2(LH)	!A1&A2&!B1&C	0.0100	n/a	n/a	-0.0390
B2(LH)	!A1&A2&B1&C	0.0100	n/a	n/a	-0.0338
B2(LH)	A1&!A2&!B1&C	0.0100	n/a	n/a	-0.0390
B2(LH)	A1&!A2&B1&C	0.0100	n/a	n/a	-0.0338
B2(LH)	A1&A2&!B1&!C	0.0100	n/a	n/a	-0.0390
B2(LH)	A1&A2&!B1&C	0.0100	n/a	n/a	-0.0390
B2(LH)	A1&A2&B1&!C	0.0100	n/a	n/a	-0.0319
B2(LH)	A1&A2&B1&C	0.0100	n/a	n/a	-0.0345
A2(HL)	!A1&!B1&!B2&!C	0.0100	n/a	n/a	0.0430
A2(HL)	!A1&!B1&B2&!C	0.0100	n/a	n/a	0.0430
A2(HL)	!A1&B1&!B2&!C	0.0100	n/a	n/a	0.0430
A2(HL)	!A1&!B1&!B2&C	0.0100	n/a	n/a	0.0101
A2(HL)	!A1&!B1&B2&C	0.0100	n/a	n/a	0.0101
A2(HL)	!A1&B1&!B2&C	0.0100	n/a	n/a	0.0101
A2(HL)	!A1&B1&B2&!C	0.0100	n/a	n/a	0.0101
A2(HL)	!A1&B1&B2&C	0.0100	n/a	n/a	0.0101
A2(HL)	A1&!B1&!B2&C	0.0100	n/a	n/a	0.0425
A2(HL)	A1&!B1&B2&C	0.0100	n/a	n/a	0.0425
A2(HL)	A1&B1&!B2&C	0.0100	n/a	n/a	0.0425
A2(HL)	A1&B1&B2&!C	0.0100	n/a	n/a	0.0830
A2(HL)	A1&B1&B2&C	0.0100	n/a	n/a	0.0425
B1(HL)	!A1&!A2&!B2&!C	0.0100	n/a	n/a	0.0433
B1(HL)	!A1&A2&!B2&!C	0.0100	n/a	n/a	0.0434
B1(HL)	A1&!A2&!B2&!C	0.0100	n/a	n/a	0.0434
B1(HL)	!A1&!A2&!B2&C	0.0100	n/a	n/a	0.0393
B1(HL)	!A1&!A2&B2&C	0.0100	n/a	n/a	0.0394
B1(HL)	!A1&A2&!B2&C	0.0100	n/a	n/a	0.0393
B1(HL)	!A1&A2&B2&C	0.0100	n/a	n/a	0.0394
B1(HL)	A1&!A2&!B2&C	0.0100	n/a	n/a	0.0392
B1(HL)	A1&!A2&B2&C	0.0100	n/a	n/a	0.0394
B1(HL)	A1&A2&!B2&!C	0.0100	n/a	n/a	0.0392
B1(HL)	A1&A2&!B2&C	0.0100	n/a	n/a	0.0393
B1(HL)	A1&A2&B2&!C	0.0100	n/a	n/a	0.0393
B1(HL)	A1&A2&B2&C	0.0100	n/a	n/a	0.0394
B2(HL)	!A1&!A2&!B1&!C	0.0100	n/a	n/a	0.0429
B2(HL)	!A1&A2&!B1&!C	0.0100	n/a	n/a	0.0429
B2(HL)	A1&!A2&!B1&!C	0.0100	n/a	n/a	0.0429
B2(HL)	!A1&!A2&!B1&C	0.0100	n/a	n/a	0.0393
B2(HL)	!A1&!A2&B1&C	0.0100	n/a	n/a	0.0393
B2(HL)	!A1&A2&!B1&C	0.0100	n/a	n/a	0.0393
B2(HL)	!A1&A2&B1&C	0.0100	n/a	n/a	0.0393
B2(HL)	A1&!A2&!B1&C	0.0100	n/a	n/a	0.0393
B2(HL)	A1&!A2&B1&C	0.0100	n/a	n/a	0.0393
B2(HL)	A1&A2&!B1&!C	0.0100	n/a	n/a	0.0393
B2(HL)	A1&A2&!B1&C	0.0100	n/a	n/a	0.0393
B2(HL)	A1&A2&B1&!C	0.0100	n/a	n/a	0.0392
B2(HL)	A1&A2&B1&C	0.0100	n/a	n/a	0.0393
A1(HL)	!A2&!B1&!B2&!C	0.0100	n/a	n/a	0.0435

continues on next page

Table 17 – continued from previous page

A1(HL)	!A2&!B1&B2&!C	0.0100	n/a	n/a	0.0435
A1(HL)	!A2&B1&!B2&!C	0.0100	n/a	n/a	0.0435
A1(HL)	!A2&!B1&!B2&C	0.0100	n/a	n/a	0.0101
A1(HL)	!A2&!B1&B2&C	0.0100	n/a	n/a	0.0101
A1(HL)	!A2&B1&!B2&C	0.0100	n/a	n/a	0.0101
A1(HL)	!A2&B1&B2&!C	0.0100	n/a	n/a	0.0101
A1(HL)	!A2&B1&B2&C	0.0100	n/a	n/a	0.0101
A1(HL)	A2&!B1&!B2&C	0.0100	n/a	n/a	0.0425
A1(HL)	A2&!B1&B2&C	0.0100	n/a	n/a	0.0425
A1(HL)	A2&B1&!B2&C	0.0100	n/a	n/a	0.0425
A1(HL)	A2&B1&B2&!C	0.0100	n/a	n/a	0.0830
A1(HL)	A2&B1&B2&C	0.0100	n/a	n/a	0.0424
B1(LH)	!A1&!A2&!B2&!C	0.0100	n/a	n/a	-0.0312
B1(LH)	!A1&A2&!B2&!C	0.0100	n/a	n/a	-0.0312
B1(LH)	A1&!A2&!B2&!C	0.0100	n/a	n/a	-0.0312
B1(LH)	!A1&!A2&!B2&C	0.0100	n/a	n/a	-0.0390
B1(LH)	!A1&!A2&B2&C	0.0100	n/a	n/a	-0.0337
B1(LH)	!A1&A2&!B2&C	0.0100	n/a	n/a	-0.0390
B1(LH)	!A1&A2&B2&C	0.0100	n/a	n/a	-0.0337
B1(LH)	A1&!A2&!B2&C	0.0100	n/a	n/a	-0.0390
B1(LH)	A1&!A2&B2&C	0.0100	n/a	n/a	-0.0337
B1(LH)	A1&A2&!B2&!C	0.0100	n/a	n/a	-0.0390
B1(LH)	A1&A2&!B2&C	0.0100	n/a	n/a	-0.0390
B1(LH)	A1&A2&B2&!C	0.0100	n/a	n/a	-0.0319
B1(LH)	A1&A2&B2&C	0.0100	n/a	n/a	-0.0344
C(LH)	!A1&!A2&B1&B2	0.0100	n/a	n/a	-0.0117
C(LH)	!A1&A2&B1&B2	0.0100	n/a	n/a	-0.0117
C(LH)	A1&!A2&B1&B2	0.0100	n/a	n/a	-0.0117
C(LH)	A1&A2&!B1&!B2	0.0100	n/a	n/a	-0.0295
C(LH)	A1&A2&!B1&B2	0.0100	n/a	n/a	-0.0291
C(LH)	A1&A2&B1&!B2	0.0100	n/a	n/a	-0.0291
C(LH)	A1&A2&B1&B2	0.0100	n/a	n/a	-0.0223
A2(LH)	!A1&!B1&!B2&!C	0.0100	n/a	n/a	-0.0397
A2(LH)	!A1&!B1&B2&!C	0.0100	n/a	n/a	-0.0397
A2(LH)	!A1&B1&!B2&!C	0.0100	n/a	n/a	-0.0397
A2(LH)	!A1&!B1&!B2&C	0.0100	n/a	n/a	-0.0094
A2(LH)	!A1&!B1&B2&C	0.0100	n/a	n/a	-0.0094
A2(LH)	!A1&B1&!B2&C	0.0100	n/a	n/a	-0.0094
A2(LH)	!A1&B1&B2&!C	0.0100	n/a	n/a	-0.0094
A2(LH)	!A1&B1&B2&C	0.0100	n/a	n/a	-0.0094
A2(LH)	A1&!B1&!B2&C	0.0100	n/a	n/a	-0.0102
A2(LH)	A1&!B1&B2&C	0.0100	n/a	n/a	-0.0102
A2(LH)	A1&B1&!B2&C	0.0100	n/a	n/a	-0.0102
A2(LH)	A1&B1&B2&!C	0.0100	n/a	n/a	-0.0102
A2(LH)	A1&B1&B2&C	0.0100	n/a	n/a	-0.0102

LEAKAGE POWER

When Condition	Power (nW)
!A1&!A2&!B1&!B2&!C	0.1262
!A1&!A2&!B1&B2&!C	0.1264
!A1&!A2&B1&!B2&!C	0.1664
!A1&A2&!B1&!B2&!C	0.1264
!A1&A2&!B1&B2&!C	0.1266
!A1&A2&B1&!B2&!C	0.1666
A1&!A2&!B1&!B2&!C	0.1664
A1&!A2&!B1&B2&!C	0.1666
A1&!A2&B1&!B2&!C	0.2066
!A1&!A2&!B1&!B2&C	0.1553
!A1&!A2&!B1&B2&C	0.1553
!A1&!A2&B1&!B2&C	0.1553
!A1&!A2&B1&B2&!C	0.2092
!A1&!A2&B1&B2&C	0.1554
!A1&A2&!B1&!B2&C	0.1576
!A1&A2&!B1&B2&C	0.1576
!A1&A2&B1&!B2&C	0.1576
!A1&A2&B1&B2&!C	0.2114
!A1&A2&B1&B2&C	0.1576
A1&!A2&!B1&!B2&C	0.1576
A1&!A2&!B1&B2&C	0.1576
A1&!A2&B1&!B2&C	0.1576
A1&!A2&B1&B2&!C	0.2114
A1&!A2&B1&B2&C	0.1576
A1&A2&!B1&!B2&!C	0.1030
A1&A2&!B1&!B2&C	0.1029
A1&A2&!B1&B2&!C	0.1030
A1&A2&!B1&B2&C	0.1029
A1&A2&B1&!B2&!C	0.1030
A1&A2&B1&!B2&C	0.1029
A1&A2&B1&B2&!C	0.1030
A1&A2&B1&B2&C	0.1030

gf180mcu_fd_sc_mcu7t5v0__aoi221_2

gf180mcu_fd_sc_mcu7t5v0__aoi221_2 symbol

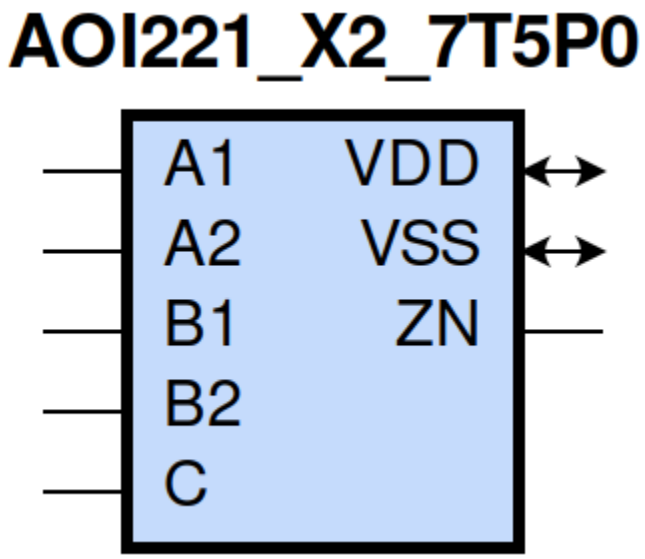

gf180mcu_fd_sc_mcu7t5v0__aoi221_2 schematic

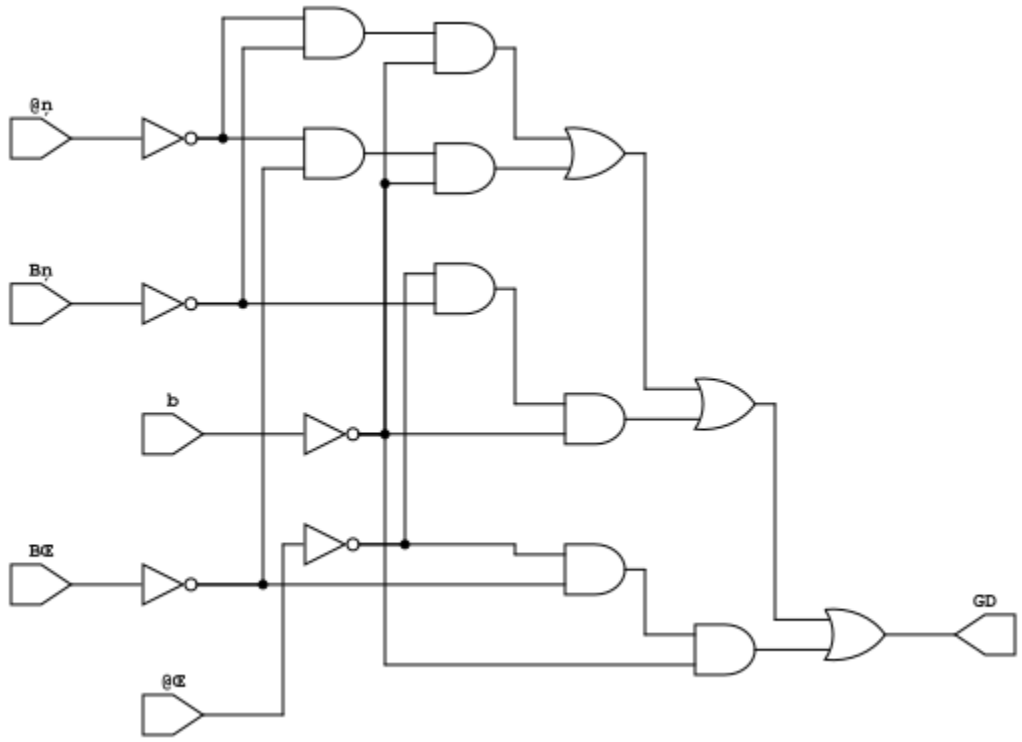

gf180mcu_fd_sc_mcu7t5v0__aoi221_2 layout

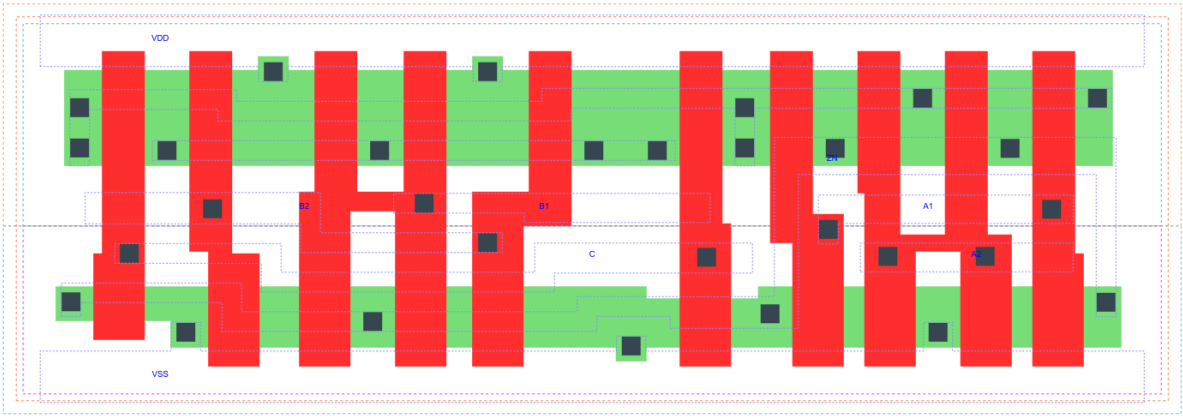

AOI221_X2 is a two 2-input AND into 3-input NOR, NOR[AND(A1,A2),AND(B1,B2),C], 2X drive strength

Attributes

Attribute	Value
area	50.489600 μm^2

OUTPUT FUNCTIONS

Output Pin	Function
ZN	(((!A1)&(!B1)&(!C))|((!A1)&(!B2)&(!C))|((!A2)&(!B1)&(!C))|((!A2)&(!B2)&(!C)))

TRUTH TABLE FOR ZN

A1	A2	B1	B2	C	ZN
0	?	0	?	0	1
0	?	?	0	0	1
?	0	0	?	0	1
?	0	?	0	0	1
1	1	?	?	?	0
?	?	1	1	?	0
?	?	?	?	1	0

FUNCTIONAL SCHEMATIC

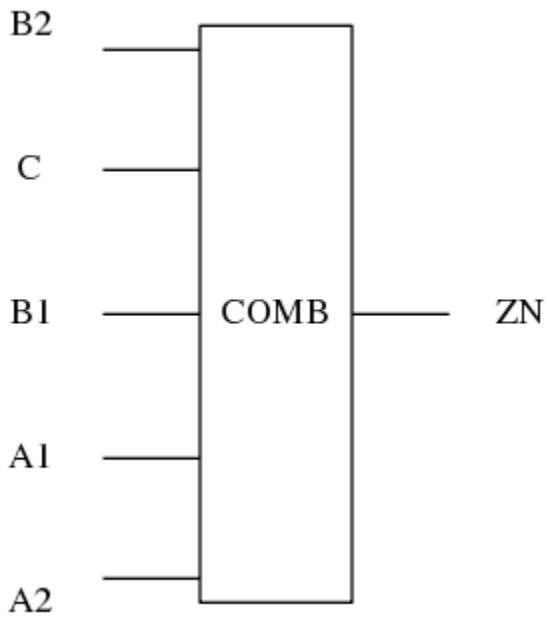

PIN CAPACITANCE (pf)

Pin	Type	Capacitance (pf)
B2	input	0.0092
C	input	0.0092
B1	input	0.0088
A1	input	0.0094
A2	input	0.0087

DELAY AND OUTPUT TRANSITION TIME corresponding to min slew and load

Input Pin	Output	When Condition	Tin (ns)	Out Load (pf)	Delay (ns)	Tout (ns)
B2(HL)	ZN(LH)	!A1&!A2&B1&!C	0.0100	0.0010	0.3271	0.2180
B2(HL)	ZN(LH)	!A1&A2&B1&!C	0.0100	0.0010	0.3693	0.2186
B2(HL)	ZN(LH)	A1&!A2&B1&!C	0.0100	0.0010	0.4204	0.2581
B2(LH)	ZN(HL)	!A1&!A2&B1&!C	0.0100	0.0010	0.1727	0.1163
B2(LH)	ZN(HL)	!A1&A2&B1&!C	0.0100	0.0010	0.1373	0.1018
B2(LH)	ZN(HL)	A1&!A2&B1&!C	0.0100	0.0010	0.1500	0.1238

continues on next page

Table 19 – continued from previous page

C(HL)	ZN(LH)	!A1&!A2&!B1&!B2	0.0100	0.0010	0.1908	0.1381
C(HL)	ZN(LH)	!A1&!A2&!B1&B2	0.0100	0.0010	0.2299	0.1828
C(HL)	ZN(LH)	!A1&!A2&B1&!B2	0.0100	0.0010	0.2757	0.2176
C(HL)	ZN(LH)	!A1&A2&!B1&!B2	0.0100	0.0010	0.2228	0.1409
C(HL)	ZN(LH)	!A1&A2&!B1&B2	0.0100	0.0010	0.2631	0.1769
C(HL)	ZN(LH)	!A1&A2&B1&!B2	0.0100	0.0010	0.3176	0.2184
C(HL)	ZN(LH)	A1&!A2&!B1&!B2	0.0100	0.0010	0.2661	0.1735
C(HL)	ZN(LH)	A1&!A2&!B1&B2	0.0100	0.0010	0.3151	0.2164
C(HL)	ZN(LH)	A1&!A2&B1&!B2	0.0100	0.0010	0.3690	0.2580
C(LH)	ZN(HL)	!A1&!A2&!B1&!B2	0.0100	0.0010	0.1296	0.0824
C(LH)	ZN(HL)	!A1&!A2&!B1&B2	0.0100	0.0010	0.1299	0.0824
C(LH)	ZN(HL)	!A1&!A2&B1&!B2	0.0100	0.0010	0.1395	0.1001
C(LH)	ZN(HL)	!A1&A2&!B1&!B2	0.0100	0.0010	0.1078	0.0729
C(LH)	ZN(HL)	!A1&A2&!B1&B2	0.0100	0.0010	0.1081	0.0732
C(LH)	ZN(HL)	!A1&A2&B1&!B2	0.0100	0.0010	0.1176	0.0916
C(LH)	ZN(HL)	A1&!A2&!B1&!B2	0.0100	0.0010	0.1171	0.0905
C(LH)	ZN(HL)	A1&!A2&!B1&B2	0.0100	0.0010	0.1174	0.0904
C(LH)	ZN(HL)	A1&!A2&B1&!B2	0.0100	0.0010	0.1281	0.1085
B1(HL)	ZN(LH)	!A1&!A2&B2&!C	0.0100	0.0010	0.2897	0.1826
B1(HL)	ZN(LH)	!A1&A2&B2&!C	0.0100	0.0010	0.3244	0.1765
B1(HL)	ZN(LH)	A1&!A2&B2&!C	0.0100	0.0010	0.3775	0.2162
B1(LH)	ZN(HL)	!A1&!A2&B2&!C	0.0100	0.0010	0.1609	0.1166
B1(LH)	ZN(HL)	!A1&A2&B2&!C	0.0100	0.0010	0.1253	0.1026
B1(LH)	ZN(HL)	A1&!A2&B2&!C	0.0100	0.0010	0.1381	0.1246
A1(HL)	ZN(LH)	A2&!B1&!B2&!C	0.0100	0.0010	0.1423	0.1334
A1(HL)	ZN(LH)	A2&!B1&B2&!C	0.0100	0.0010	0.1530	0.1609
A1(HL)	ZN(LH)	A2&B1&!B2&!C	0.0100	0.0010	0.2057	0.2090
A1(LH)	ZN(HL)	A2&!B1&!B2&!C	0.0100	0.0010	0.0803	0.0512
A1(LH)	ZN(HL)	A2&!B1&B2&!C	0.0100	0.0010	0.0803	0.0512
A1(LH)	ZN(HL)	A2&B1&!B2&!C	0.0100	0.0010	0.0861	0.0680
A2(HL)	ZN(LH)	A1&!B1&!B2&!C	0.0100	0.0010	0.1757	0.1692
A2(HL)	ZN(LH)	A1&!B1&B2&!C	0.0100	0.0010	0.1920	0.2053
A2(HL)	ZN(LH)	A1&B1&!B2&!C	0.0100	0.0010	0.2450	0.2514
A2(LH)	ZN(HL)	A1&!B1&!B2&!C	0.0100	0.0010	0.0912	0.0512
A2(LH)	ZN(HL)	A1&!B1&B2&!C	0.0100	0.0010	0.0912	0.0512
A2(LH)	ZN(HL)	A1&B1&!B2&!C	0.0100	0.0010	0.0971	0.0680

DYNAMIC ENERGY

Input Pin	When Condition	Tin (ns)	Output	Out Load (pf)	Energy (uW/MHz)
C	!A1&!A2&!B1&!B2	0.0100	ZN(LH)	0.0010	0.4707
C	!A1&!A2&!B1&B2	0.0100	ZN(LH)	0.0010	0.4706
C	!A1&!A2&B1&!B2	0.0100	ZN(LH)	0.0010	0.5453
C	!A1&A2&!B1&!B2	0.0100	ZN(LH)	0.0010	0.4299
C	!A1&A2&!B1&B2	0.0100	ZN(LH)	0.0010	0.4299
C	!A1&A2&B1&!B2	0.0100	ZN(LH)	0.0010	0.5049
C	A1&!A2&!B1&!B2	0.0100	ZN(LH)	0.0010	0.5006

continues on next page

Table 20 – continued from previous page

C	A1&!A2&!B1&B2	0.0100	ZN(LH)	0.0010	0.5005
C	A1&!A2&B1&!B2	0.0100	ZN(LH)	0.0010	0.5752
C	!A1&!A2&!B1&!B2	0.0100	ZN(HL)	0.0010	0.0945
C	!A1&!A2&!B1&B2	0.0100	ZN(HL)	0.0010	0.0953
C	!A1&!A2&B1&!B2	0.0100	ZN(HL)	0.0010	0.0954
C	!A1&A2&!B1&!B2	0.0100	ZN(HL)	0.0010	0.0824
C	!A1&A2&!B1&B2	0.0100	ZN(HL)	0.0010	0.0834
C	!A1&A2&B1&!B2	0.0100	ZN(HL)	0.0010	0.0835
C	A1&!A2&!B1&!B2	0.0100	ZN(HL)	0.0010	0.0826
C	A1&!A2&!B1&B2	0.0100	ZN(HL)	0.0010	0.0835
C	A1&!A2&B1&!B2	0.0100	ZN(HL)	0.0010	0.0835
A1	A2&!B1&!B2&!C	0.0100	ZN(LH)	0.0010	0.3167
A1	A2&!B1&B2&!C	0.0100	ZN(LH)	0.0010	0.3168
A1	A2&B1&!B2&!C	0.0100	ZN(LH)	0.0010	0.3924
B2	!A1&!A2&B1&!C	0.0100	ZN(LH)	0.0010	0.6394
B2	!A1&A2&B1&!C	0.0100	ZN(LH)	0.0010	0.5988
B2	A1&!A2&B1&!C	0.0100	ZN(LH)	0.0010	0.6689
B1	!A1&!A2&B2&!C	0.0100	ZN(LH)	0.0010	0.5746
B1	!A1&A2&B2&!C	0.0100	ZN(LH)	0.0010	0.5338
B1	A1&!A2&B2&!C	0.0100	ZN(LH)	0.0010	0.6056
A2	A1&!B1&!B2&!C	0.0100	ZN(LH)	0.0010	0.3770
A2	A1&!B1&B2&!C	0.0100	ZN(LH)	0.0010	0.3771
A2	A1&B1&!B2&!C	0.0100	ZN(LH)	0.0010	0.4515
B1	!A1&!A2&B2&!C	0.0100	ZN(HL)	0.0010	0.1654
B1	!A1&A2&B2&!C	0.0100	ZN(HL)	0.0010	0.1539
B1	A1&!A2&B2&!C	0.0100	ZN(HL)	0.0010	0.1541
A1	A2&!B1&!B2&!C	0.0100	ZN(HL)	0.0010	0.0086
A1	A2&!B1&B2&!C	0.0100	ZN(HL)	0.0010	0.0086
A1	A2&B1&!B2&!C	0.0100	ZN(HL)	0.0010	0.0086
B2	!A1&!A2&B1&!C	0.0100	ZN(HL)	0.0010	0.1655
B2	!A1&A2&B1&!C	0.0100	ZN(HL)	0.0010	0.1540
B2	A1&!A2&B1&!C	0.0100	ZN(HL)	0.0010	0.1540
A2	A1&!B1&!B2&!C	0.0100	ZN(HL)	0.0010	0.0085
A2	A1&!B1&B2&!C	0.0100	ZN(HL)	0.0010	0.0085
A2	A1&B1&!B2&!C	0.0100	ZN(HL)	0.0010	0.0085
A1(LH)	!A2&!B1&!B2&!C	0.0100	n/a	n/a	-0.0566
A1(LH)	!A2&!B1&B2&!C	0.0100	n/a	n/a	-0.0566
A1(LH)	!A2&B1&!B2&!C	0.0100	n/a	n/a	-0.0566
A1(LH)	!A2&!B1&!B2&C	0.0100	n/a	n/a	-0.0173
A1(LH)	!A2&!B1&B2&C	0.0100	n/a	n/a	-0.0173
A1(LH)	!A2&B1&!B2&C	0.0100	n/a	n/a	-0.0173
A1(LH)	!A2&B1&B2&!C	0.0100	n/a	n/a	-0.0172
A1(LH)	!A2&B1&B2&C	0.0100	n/a	n/a	-0.0173
A1(LH)	A2&!B1&!B2&C	0.0100	n/a	n/a	-0.0177
A1(LH)	A2&!B1&B2&C	0.0100	n/a	n/a	-0.0177
A1(LH)	A2&B1&!B2&C	0.0100	n/a	n/a	-0.0177
A1(LH)	A2&B1&B2&!C	0.0100	n/a	n/a	-0.0178
A1(LH)	A2&B1&B2&C	0.0100	n/a	n/a	-0.0177
C(HL)	!A1&!A2&B1&B2	0.0100	n/a	n/a	0.0742
C(HL)	!A1&A2&B1&B2	0.0100	n/a	n/a	0.0739
C(HL)	A1&!A2&B1&B2	0.0100	n/a	n/a	0.0739
C(HL)	A1&A2&!B1&!B2	0.0100	n/a	n/a	0.0733

continues on next page

Table 20 – continued from previous page

C(HL)	A1&A2&!B1&B2	0.0100	n/a	n/a	0.0733
C(HL)	A1&A2&B1&!B2	0.0100	n/a	n/a	0.0733
C(HL)	A1&A2&B1&B2	0.0100	n/a	n/a	0.0371
B2(LH)	!A1&!A2&!B1&!C	0.0100	n/a	n/a	-0.0720
B2(LH)	!A1&A2&!B1&!C	0.0100	n/a	n/a	-0.0720
B2(LH)	A1&!A2&!B1&!C	0.0100	n/a	n/a	-0.0720
B2(LH)	!A1&!A2&!B1&C	0.0100	n/a	n/a	-0.0717
B2(LH)	!A1&!A2&B1&C	0.0100	n/a	n/a	-0.0615
B2(LH)	!A1&A2&!B1&C	0.0100	n/a	n/a	-0.0717
B2(LH)	!A1&A2&B1&C	0.0100	n/a	n/a	-0.0615
B2(LH)	A1&!A2&!B1&C	0.0100	n/a	n/a	-0.0717
B2(LH)	A1&!A2&B1&C	0.0100	n/a	n/a	-0.0615
B2(LH)	A1&A2&!B1&!C	0.0100	n/a	n/a	-0.0718
B2(LH)	A1&A2&!B1&C	0.0100	n/a	n/a	-0.0717
B2(LH)	A1&A2&B1&!C	0.0100	n/a	n/a	-0.0570
B2(LH)	A1&A2&B1&C	0.0100	n/a	n/a	-0.0628
A2(HL)	!A1&!B1&!B2&!C	0.0100	n/a	n/a	0.0796
A2(HL)	!A1&!B1&B2&!C	0.0100	n/a	n/a	0.0796
A2(HL)	!A1&B1&!B2&!C	0.0100	n/a	n/a	0.0796
A2(HL)	!A1&!B1&!B2&C	0.0100	n/a	n/a	0.0176
A2(HL)	!A1&!B1&B2&C	0.0100	n/a	n/a	0.0176
A2(HL)	!A1&B1&!B2&C	0.0100	n/a	n/a	0.0176
A2(HL)	!A1&B1&B2&!C	0.0100	n/a	n/a	0.0176
A2(HL)	!A1&B1&B2&C	0.0100	n/a	n/a	0.0176
A2(HL)	A1&!B1&!B2&C	0.0100	n/a	n/a	0.0767
A2(HL)	A1&!B1&B2&C	0.0100	n/a	n/a	0.0767
A2(HL)	A1&B1&!B2&C	0.0100	n/a	n/a	0.0767
A2(HL)	A1&B1&B2&!C	0.0100	n/a	n/a	0.1508
A2(HL)	A1&B1&B2&C	0.0100	n/a	n/a	0.0767
B1(HL)	!A1&!A2&!B2&!C	0.0100	n/a	n/a	0.0802
B1(HL)	!A1&A2&!B2&!C	0.0100	n/a	n/a	0.0801
B1(HL)	A1&!A2&!B2&!C	0.0100	n/a	n/a	0.0802
B1(HL)	!A1&!A2&!B2&C	0.0100	n/a	n/a	0.0722
B1(HL)	!A1&!A2&B2&C	0.0100	n/a	n/a	0.0721
B1(HL)	!A1&A2&!B2&C	0.0100	n/a	n/a	0.0722
B1(HL)	!A1&A2&B2&C	0.0100	n/a	n/a	0.0721
B1(HL)	A1&!A2&!B2&C	0.0100	n/a	n/a	0.0721
B1(HL)	A1&!A2&B2&C	0.0100	n/a	n/a	0.0721
B1(HL)	A1&A2&!B2&!C	0.0100	n/a	n/a	0.0722
B1(HL)	A1&A2&!B2&C	0.0100	n/a	n/a	0.0722
B1(HL)	A1&A2&B2&!C	0.0100	n/a	n/a	0.0731
B1(HL)	A1&A2&B2&C	0.0100	n/a	n/a	0.0721
B2(HL)	!A1&!A2&!B1&!C	0.0100	n/a	n/a	0.0798
B2(HL)	!A1&A2&!B1&!C	0.0100	n/a	n/a	0.0798
B2(HL)	A1&!A2&!B1&!C	0.0100	n/a	n/a	0.0798
B2(HL)	!A1&!A2&!B1&C	0.0100	n/a	n/a	0.0723
B2(HL)	!A1&!A2&B1&C	0.0100	n/a	n/a	0.0721
B2(HL)	!A1&A2&!B1&C	0.0100	n/a	n/a	0.0723
B2(HL)	!A1&A2&B1&C	0.0100	n/a	n/a	0.0721
B2(HL)	A1&!A2&!B1&C	0.0100	n/a	n/a	0.0723
B2(HL)	A1&!A2&B1&C	0.0100	n/a	n/a	0.0721
B2(HL)	A1&A2&!B1&!C	0.0100	n/a	n/a	0.0722

continues on next page

Table 20 – continued from previous page

B2(HL)	A1&A2&!B1&C	0.0100	n/a	n/a	0.0723
B2(HL)	A1&A2&B1&!C	0.0100	n/a	n/a	0.0732
B2(HL)	A1&A2&B1&C	0.0100	n/a	n/a	0.0721
A1(HL)	!A2&!B1&!B2&!C	0.0100	n/a	n/a	0.0805
A1(HL)	!A2&!B1&B2&!C	0.0100	n/a	n/a	0.0805
A1(HL)	!A2&B1&!B2&!C	0.0100	n/a	n/a	0.0805
A1(HL)	!A2&!B1&!B2&C	0.0100	n/a	n/a	0.0176
A1(HL)	!A2&!B1&B2&C	0.0100	n/a	n/a	0.0176
A1(HL)	!A2&B1&!B2&C	0.0100	n/a	n/a	0.0176
A1(HL)	!A2&B1&B2&!C	0.0100	n/a	n/a	0.0175
A1(HL)	!A2&B1&B2&C	0.0100	n/a	n/a	0.0176
A1(HL)	A2&!B1&!B2&C	0.0100	n/a	n/a	0.0767
A1(HL)	A2&!B1&B2&C	0.0100	n/a	n/a	0.0767
A1(HL)	A2&B1&!B2&C	0.0100	n/a	n/a	0.0767
A1(HL)	A2&B1&B2&!C	0.0100	n/a	n/a	0.1508
A1(HL)	A2&B1&B2&C	0.0100	n/a	n/a	0.0767
B1(LH)	!A1&!A2&!B2&!C	0.0100	n/a	n/a	-0.0516
B1(LH)	!A1&A2&!B2&!C	0.0100	n/a	n/a	-0.0516
B1(LH)	A1&!A2&!B2&!C	0.0100	n/a	n/a	-0.0516
B1(LH)	!A1&!A2&!B2&C	0.0100	n/a	n/a	-0.0718
B1(LH)	!A1&!A2&B2&C	0.0100	n/a	n/a	-0.0616
B1(LH)	!A1&A2&!B2&C	0.0100	n/a	n/a	-0.0718
B1(LH)	!A1&A2&B2&C	0.0100	n/a	n/a	-0.0616
B1(LH)	A1&!A2&!B2&C	0.0100	n/a	n/a	-0.0718
B1(LH)	A1&!A2&B2&C	0.0100	n/a	n/a	-0.0616
B1(LH)	A1&A2&!B2&!C	0.0100	n/a	n/a	-0.0718
B1(LH)	A1&A2&!B2&C	0.0100	n/a	n/a	-0.0718
B1(LH)	A1&A2&B2&!C	0.0100	n/a	n/a	-0.0570
B1(LH)	A1&A2&B2&C	0.0100	n/a	n/a	-0.0629
C(LH)	!A1&!A2&B1&B2	0.0100	n/a	n/a	-0.0215
C(LH)	!A1&A2&B1&B2	0.0100	n/a	n/a	-0.0216
C(LH)	A1&!A2&B1&B2	0.0100	n/a	n/a	-0.0216
C(LH)	A1&A2&!B1&!B2	0.0100	n/a	n/a	-0.0527
C(LH)	A1&A2&!B1&B2	0.0100	n/a	n/a	-0.0521
C(LH)	A1&A2&B1&!B2	0.0100	n/a	n/a	-0.0521
C(LH)	A1&A2&B1&B2	0.0100	n/a	n/a	-0.0401
A2(LH)	!A1&!B1&!B2&!C	0.0100	n/a	n/a	-0.0727
A2(LH)	!A1&!B1&B2&!C	0.0100	n/a	n/a	-0.0727
A2(LH)	!A1&B1&!B2&!C	0.0100	n/a	n/a	-0.0727
A2(LH)	!A1&!B1&!B2&C	0.0100	n/a	n/a	-0.0173
A2(LH)	!A1&!B1&B2&C	0.0100	n/a	n/a	-0.0173
A2(LH)	!A1&B1&!B2&C	0.0100	n/a	n/a	-0.0173
A2(LH)	!A1&B1&B2&!C	0.0100	n/a	n/a	-0.0172
A2(LH)	!A1&B1&B2&C	0.0100	n/a	n/a	-0.0173
A2(LH)	A1&!B1&!B2&C	0.0100	n/a	n/a	-0.0177
A2(LH)	A1&!B1&B2&C	0.0100	n/a	n/a	-0.0177
A2(LH)	A1&B1&!B2&C	0.0100	n/a	n/a	-0.0177
A2(LH)	A1&B1&B2&!C	0.0100	n/a	n/a	-0.0178
A2(LH)	A1&B1&B2&C	0.0100	n/a	n/a	-0.0177

LEAKAGE POWER

When Condition	Power (nW)
!A1&!A2&!B1&!B2&!C	0.2026
!A1&!A2&!B1&B2&!C	0.2031
!A1&!A2&B1&!B2&!C	0.2830
!A1&A2&!B1&!B2&!C	0.2031
!A1&A2&!B1&B2&!C	0.2035
!A1&A2&B1&!B2&!C	0.2835
A1&!A2&!B1&!B2&!C	0.2830
A1&!A2&!B1&B2&!C	0.2835
A1&!A2&B1&!B2&!C	0.3634
!A1&!A2&!B1&!B2&C	0.2604
!A1&!A2&!B1&B2&C	0.2604
!A1&!A2&B1&!B2&C	0.2604
!A1&!A2&B1&B2&!C	0.3683
!A1&!A2&B1&B2&C	0.2604
!A1&A2&!B1&!B2&C	0.2648
!A1&A2&!B1&B2&C	0.2648
!A1&A2&B1&!B2&C	0.2648
!A1&A2&B1&B2&!C	0.3725
!A1&A2&B1&B2&C	0.2647
A1&!A2&!B1&!B2&C	0.2648
A1&!A2&!B1&B2&C	0.2648
A1&!A2&B1&!B2&C	0.2647
A1&!A2&B1&B2&!C	0.3725
A1&!A2&B1&B2&C	0.2647
A1&A2&!B1&!B2&!C	0.1557
A1&A2&!B1&!B2&C	0.1563
A1&A2&!B1&B2&!C	0.1557
A1&A2&!B1&B2&C	0.1563
A1&A2&B1&!B2&!C	0.1557
A1&A2&B1&!B2&C	0.1563
A1&A2&B1&B2&!C	0.1563
A1&A2&B1&B2&C	0.1563

gf180mcu_fd_sc_mcu7t5v0__aoi221_4

gf180mcu_fd_sc_mcu7t5v0__aoi221_4 symbol

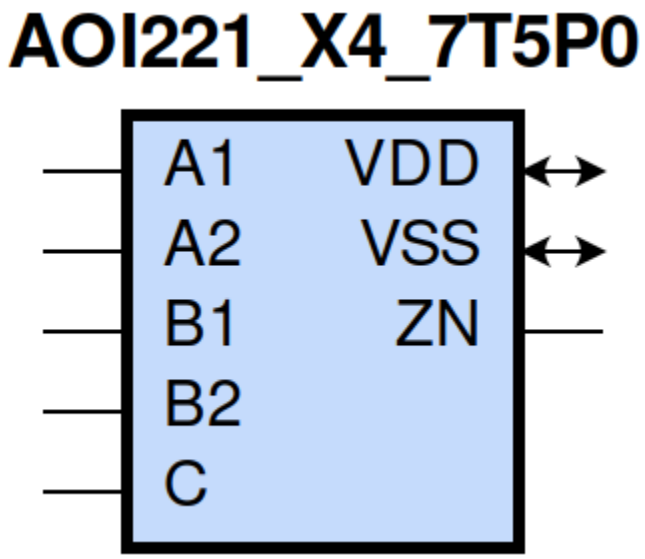

gf180mcu_fd_sc_mcu7t5v0__aoi221_4 schematic

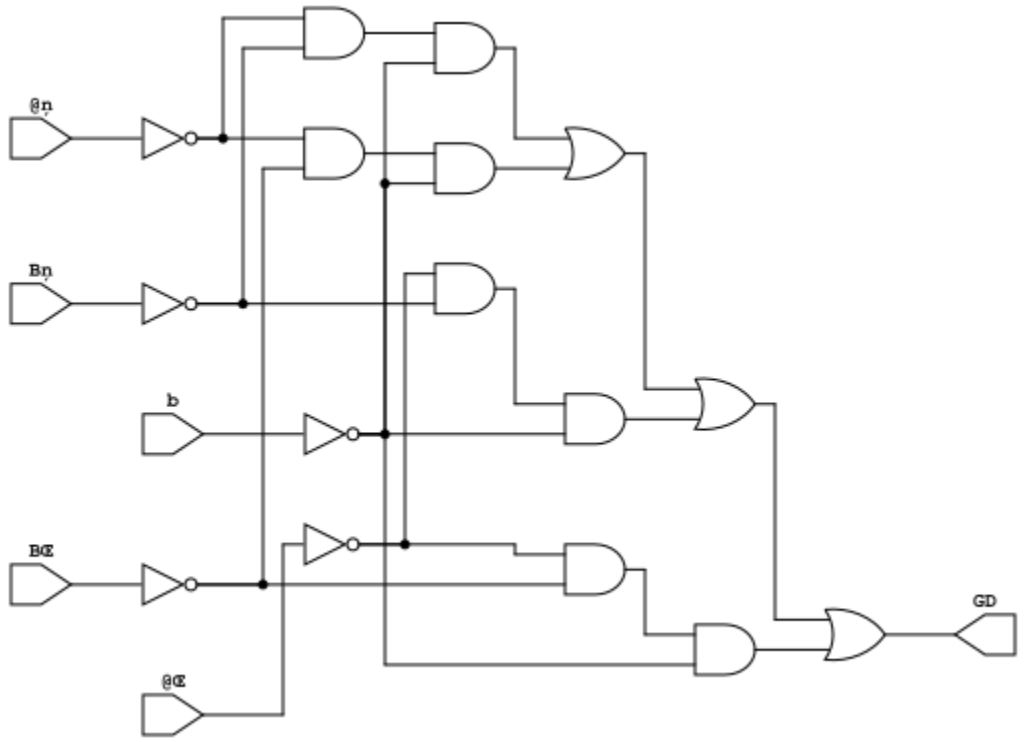

gf180mcu_fd_sc_mcu7t5v0__aoi221_4 layout

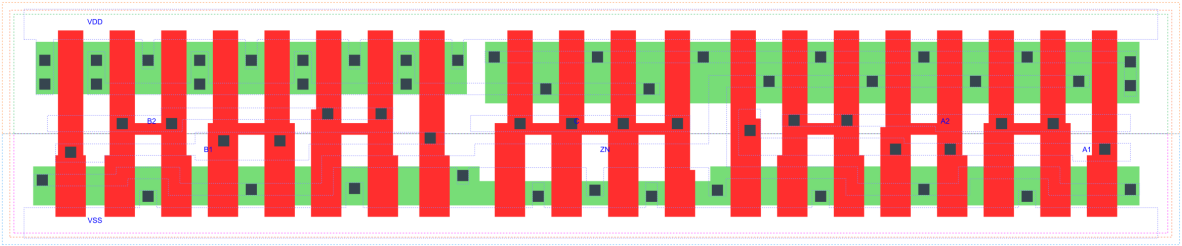

AOI221_X4 is a two 2-input AND into 3-input NOR, NOR[AND(A1,A2),AND(B1,B2),C], 4X drive strength

Attributes

Attribute	Value
area	87.808000 μm^2

OUTPUT FUNCTIONS

Output Pin	Function
ZN	(((!A1)&(!B1)&(!C))|((!A1)&(!B2)&(!C))|((!A2)&(!B1)&(!C))|((!A2)&(!B2)&(!C)))

TRUTH TABLE FOR ZN

A1	A2	B1	B2	C	ZN
0	?	0	?	0	1
0	?	?	0	0	1
?	0	0	?	0	1
?	0	?	0	0	1
1	1	?	?	?	0
?	?	1	1	?	0
?	?	?	?	1	0

FUNCTIONAL SCHEMATIC

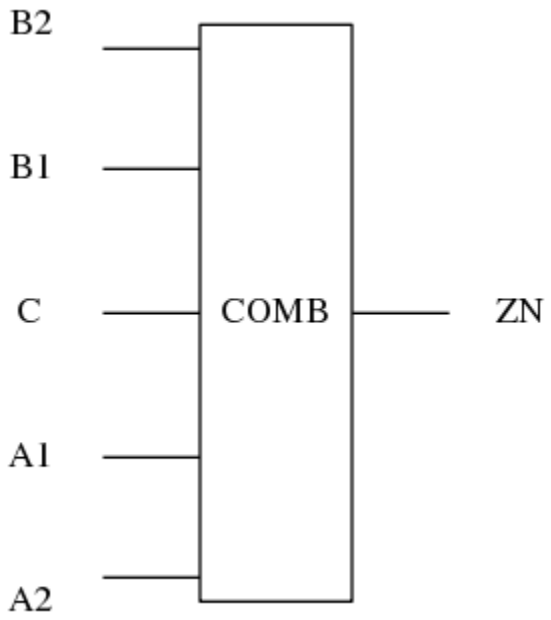

PIN CAPACITANCE (pf)

Pin	Type	Capacitance (pf)
B2	input	0.0172
B1	input	0.0179
C	input	0.0154
A1	input	0.0197
A2	input	0.0188

DELAY AND OUTPUT TRANSITION TIME corresponding to min slew and load

Input Pin	Output	When Condition	Tin (ns)	Out Load (pf)	Delay (ns)	Tout (ns)
B2(HL)	ZN(LH)	!A1&!A2&B1&!C	0.0100	0.0010	0.3133	0.2141
B2(HL)	ZN(LH)	!A1&A2&B1&!C	0.0100	0.0010	0.3493	0.2110
B2(HL)	ZN(LH)	A1&!A2&B1&!C	0.0100	0.0010	0.4050	0.2537
B2(LH)	ZN(HL)	!A1&!A2&B1&!C	0.0100	0.0010	0.1574	0.1033
B2(LH)	ZN(HL)	!A1&A2&B1&!C	0.0100	0.0010	0.1256	0.0901
B2(LH)	ZN(HL)	A1&!A2&B1&!C	0.0100	0.0010	0.1380	0.1122
B1(HL)	ZN(LH)	!A1&!A2&B2&!C	0.0100	0.0010	0.2732	0.1769
B1(HL)	ZN(LH)	!A1&A2&B2&!C	0.0100	0.0010	0.3020	0.1672
B1(HL)	ZN(LH)	A1&!A2&B2&!C	0.0100	0.0010	0.3598	0.2100
B1(LH)	ZN(HL)	!A1&!A2&B2&!C	0.0100	0.0010	0.1456	0.1040

continues on next page

Table 22 – continued from previous page

B1(LH)	ZN(HL)	!A1&A2&B2&!C	0.0100	0.0010	0.1136	0.0906
B1(LH)	ZN(HL)	A1&!A2&B2&!C	0.0100	0.0010	0.1261	0.1127
C(HL)	ZN(LH)	!A1&!A2&!B1&!B2	0.0100	0.0010	0.1740	0.1293
C(HL)	ZN(LH)	!A1&!A2&!B1&B2	0.0100	0.0010	0.2150	0.1772
C(HL)	ZN(LH)	!A1&!A2&B1&!B2	0.0100	0.0010	0.2632	0.2138
C(HL)	ZN(LH)	!A1&A2&!B1&!B2	0.0100	0.0010	0.2004	0.1295
C(HL)	ZN(LH)	!A1&A2&!B1&B2	0.0100	0.0010	0.2420	0.1675
C(HL)	ZN(LH)	!A1&A2&B1&!B2	0.0100	0.0010	0.2989	0.2107
C(HL)	ZN(LH)	A1&!A2&!B1&!B2	0.0100	0.0010	0.2461	0.1643
C(HL)	ZN(LH)	A1&!A2&!B1&B2	0.0100	0.0010	0.2980	0.2102
C(HL)	ZN(LH)	A1&!A2&B1&!B2	0.0100	0.0010	0.3548	0.2538
C(LH)	ZN(HL)	!A1&!A2&!B1&!B2	0.0100	0.0010	0.1301	0.0802
C(LH)	ZN(HL)	!A1&!A2&!B1&B2	0.0100	0.0010	0.1305	0.0803
C(LH)	ZN(HL)	!A1&!A2&B1&!B2	0.0100	0.0010	0.1404	0.0991
C(LH)	ZN(HL)	!A1&A2&!B1&!B2	0.0100	0.0010	0.1084	0.0703
C(LH)	ZN(HL)	!A1&A2&!B1&B2	0.0100	0.0010	0.1089	0.0704
C(LH)	ZN(HL)	!A1&A2&B1&!B2	0.0100	0.0010	0.1187	0.0899
C(LH)	ZN(HL)	A1&!A2&!B1&!B2	0.0100	0.0010	0.1183	0.0896
C(LH)	ZN(HL)	A1&!A2&!B1&B2	0.0100	0.0010	0.1187	0.0896
C(LH)	ZN(HL)	A1&!A2&B1&!B2	0.0100	0.0010	0.1302	0.1089
A1(HL)	ZN(LH)	A2&!B1&!B2&!C	0.0100	0.0010	0.1339	0.1235
A1(HL)	ZN(LH)	A2&!B1&B2&!C	0.0100	0.0010	0.1462	0.1536
A1(HL)	ZN(LH)	A2&B1&!B2&!C	0.0100	0.0010	0.2017	0.2029
A1(LH)	ZN(HL)	A2&!B1&!B2&!C	0.0100	0.0010	0.0741	0.0458
A1(LH)	ZN(HL)	A2&!B1&B2&!C	0.0100	0.0010	0.0741	0.0458
A1(LH)	ZN(HL)	A2&B1&!B2&!C	0.0100	0.0010	0.0798	0.0625
A2(HL)	ZN(LH)	A1&!B1&!B2&!C	0.0100	0.0010	0.1701	0.1609
A2(HL)	ZN(LH)	A1&!B1&B2&!C	0.0100	0.0010	0.1898	0.2014
A2(HL)	ZN(LH)	A1&B1&!B2&!C	0.0100	0.0010	0.2455	0.2488
A2(LH)	ZN(HL)	A1&!B1&!B2&!C	0.0100	0.0010	0.0857	0.0458
A2(LH)	ZN(HL)	A1&!B1&B2&!C	0.0100	0.0010	0.0857	0.0458
A2(LH)	ZN(HL)	A1&B1&!B2&!C	0.0100	0.0010	0.0913	0.0625

DYNAMIC ENERGY

Input Pin	When Condition	Tin (ns)	Output	Out Load (pf)	Energy (uW/MHz)
C	!A1&!A2&!B1&!B2	0.0100	ZN(LH)	0.0010	0.9070
C	!A1&!A2&!B1&B2	0.0100	ZN(LH)	0.0010	0.9073
C	!A1&!A2&B1&!B2	0.0100	ZN(LH)	0.0010	1.0661
C	!A1&A2&!B1&!B2	0.0100	ZN(LH)	0.0010	0.8195
C	!A1&A2&!B1&B2	0.0100	ZN(LH)	0.0010	0.8194
C	!A1&A2&B1&!B2	0.0100	ZN(LH)	0.0010	0.9784
C	A1&!A2&!B1&!B2	0.0100	ZN(LH)	0.0010	0.9762
C	A1&!A2&!B1&B2	0.0100	ZN(LH)	0.0010	0.9763
C	A1&!A2&B1&!B2	0.0100	ZN(LH)	0.0010	1.1349
C	!A1&!A2&!B1&!B2	0.0100	ZN(HL)	0.0010	0.1944
C	!A1&!A2&!B1&B2	0.0100	ZN(HL)	0.0010	0.1964

continues on next page

Table 23 – continued from previous page

C	!A1&!A2&B1&!B2	0.0100	ZN(HL)	0.0010	0.1968
C	!A1&A2&!B1&!B2	0.0100	ZN(HL)	0.0010	0.1682
C	!A1&A2&!B1&B2	0.0100	ZN(HL)	0.0010	0.1705
C	!A1&A2&B1&!B2	0.0100	ZN(HL)	0.0010	0.1708
C	A1&!A2&!B1&!B2	0.0100	ZN(HL)	0.0010	0.1684
C	A1&!A2&!B1&B2	0.0100	ZN(HL)	0.0010	0.1708
C	A1&!A2&B1&!B2	0.0100	ZN(HL)	0.0010	0.1707
A1	A2&!B1&!B2&!C	0.0100	ZN(LH)	0.0010	0.6396
A1	A2&!B1&B2&!C	0.0100	ZN(LH)	0.0010	0.6399
A1	A2&B1&!B2&!C	0.0100	ZN(LH)	0.0010	0.8013
B2	!A1&!A2&B1&!C	0.0100	ZN(LH)	0.0010	1.2402
B2	!A1&A2&B1&!C	0.0100	ZN(LH)	0.0010	1.1524
B2	A1&!A2&B1&!C	0.0100	ZN(LH)	0.0010	1.3082
B1	!A1&!A2&B2&!C	0.0100	ZN(LH)	0.0010	1.1000
B1	!A1&A2&B2&!C	0.0100	ZN(LH)	0.0010	1.0124
B1	A1&!A2&B2&!C	0.0100	ZN(LH)	0.0010	1.1725
A2	A1&!B1&!B2&!C	0.0100	ZN(LH)	0.0010	0.7759
A2	A1&!B1&B2&!C	0.0100	ZN(LH)	0.0010	0.7762
A2	A1&B1&!B2&!C	0.0100	ZN(LH)	0.0010	0.9346
B1	!A1&!A2&B2&!C	0.0100	ZN(HL)	0.0010	0.3249
B1	!A1&A2&B2&!C	0.0100	ZN(HL)	0.0010	0.2998
B1	A1&!A2&B2&!C	0.0100	ZN(HL)	0.0010	0.2999
A1	A2&!B1&!B2&!C	0.0100	ZN(HL)	0.0010	0.0175
A1	A2&!B1&B2&!C	0.0100	ZN(HL)	0.0010	0.0175
A1	A2&B1&!B2&!C	0.0100	ZN(HL)	0.0010	0.0173
B2	!A1&!A2&B1&!C	0.0100	ZN(HL)	0.0010	0.3244
B2	!A1&A2&B1&!C	0.0100	ZN(HL)	0.0010	0.2996
B2	A1&!A2&B1&!C	0.0100	ZN(HL)	0.0010	0.2997
A2	A1&!B1&!B2&!C	0.0100	ZN(HL)	0.0010	0.0171
A2	A1&!B1&B2&!C	0.0100	ZN(HL)	0.0010	0.0171
A2	A1&B1&!B2&!C	0.0100	ZN(HL)	0.0010	0.0172
A1(LH)	!A2&!B1&!B2&!C	0.0100	n/a	n/a	-0.1183
A1(LH)	!A2&!B1&B2&!C	0.0100	n/a	n/a	-0.1183
A1(LH)	!A2&B1&!B2&!C	0.0100	n/a	n/a	-0.1183
A1(LH)	!A2&!B1&!B2&C	0.0100	n/a	n/a	-0.0370
A1(LH)	!A2&!B1&B2&C	0.0100	n/a	n/a	-0.0370
A1(LH)	!A2&B1&!B2&C	0.0100	n/a	n/a	-0.0370
A1(LH)	!A2&B1&B2&!C	0.0100	n/a	n/a	-0.0370
A1(LH)	!A2&B1&B2&C	0.0100	n/a	n/a	-0.0370
A1(LH)	A2&!B1&!B2&C	0.0100	n/a	n/a	-0.0401
A1(LH)	A2&!B1&B2&C	0.0100	n/a	n/a	-0.0401
A1(LH)	A2&B1&!B2&C	0.0100	n/a	n/a	-0.0402
A1(LH)	A2&B1&B2&!C	0.0100	n/a	n/a	-0.0398
A1(LH)	A2&B1&B2&C	0.0100	n/a	n/a	-0.0402
C(HL)	!A1&!A2&B1&B2	0.0100	n/a	n/a	0.1243
C(HL)	!A1&A2&B1&B2	0.0100	n/a	n/a	0.1239
C(HL)	A1&!A2&B1&B2	0.0100	n/a	n/a	0.1239
C(HL)	A1&A2&!B1&!B2	0.0100	n/a	n/a	0.1572
C(HL)	A1&A2&!B1&B2	0.0100	n/a	n/a	0.1570
C(HL)	A1&A2&B1&!B2	0.0100	n/a	n/a	0.1570
C(HL)	A1&A2&B1&B2	0.0100	n/a	n/a	0.0818
B2(LH)	!A1&!A2&!B1&!C	0.0100	n/a	n/a	-0.1328

continues on next page

Table 23 – continued from previous page

B2(LH)	!A1&A2&!B1&!C	0.0100	n/a	n/a	-0.1328
B2(LH)	A1&!A2&!B1&!C	0.0100	n/a	n/a	-0.1328
B2(LH)	!A1&!A2&!B1&C	0.0100	n/a	n/a	-0.1325
B2(LH)	!A1&!A2&B1&C	0.0100	n/a	n/a	-0.1126
B2(LH)	!A1&A2&!B1&C	0.0100	n/a	n/a	-0.1325
B2(LH)	!A1&A2&B1&C	0.0100	n/a	n/a	-0.1126
B2(LH)	A1&!A2&!B1&C	0.0100	n/a	n/a	-0.1325
B2(LH)	A1&!A2&B1&C	0.0100	n/a	n/a	-0.1126
B2(LH)	A1&A2&!B1&!C	0.0100	n/a	n/a	-0.1326
B2(LH)	A1&A2&!B1&C	0.0100	n/a	n/a	-0.1325
B2(LH)	A1&A2&B1&!C	0.0100	n/a	n/a	-0.1060
B2(LH)	A1&A2&B1&C	0.0100	n/a	n/a	-0.1155
A2(HL)	!A1&!B1&!B2&!C	0.0100	n/a	n/a	0.1728
A2(HL)	!A1&!B1&B2&!C	0.0100	n/a	n/a	0.1727
A2(HL)	!A1&B1&!B2&!C	0.0100	n/a	n/a	0.1727
A2(HL)	!A1&!B1&!B2&C	0.0100	n/a	n/a	0.0398
A2(HL)	!A1&!B1&B2&C	0.0100	n/a	n/a	0.0398
A2(HL)	!A1&B1&!B2&C	0.0100	n/a	n/a	0.0398
A2(HL)	!A1&B1&B2&!C	0.0100	n/a	n/a	0.0397
A2(HL)	!A1&B1&B2&C	0.0100	n/a	n/a	0.0398
A2(HL)	A1&!B1&!B2&C	0.0100	n/a	n/a	0.1590
A2(HL)	A1&!B1&B2&C	0.0100	n/a	n/a	0.1590
A2(HL)	A1&B1&!B2&C	0.0100	n/a	n/a	0.1590
A2(HL)	A1&B1&B2&!C	0.0100	n/a	n/a	0.2828
A2(HL)	A1&B1&B2&C	0.0100	n/a	n/a	0.1590
B1(HL)	!A1&!A2&!B2&!C	0.0100	n/a	n/a	0.1504
B1(HL)	!A1&A2&!B2&!C	0.0100	n/a	n/a	0.1503
B1(HL)	A1&!A2&!B2&!C	0.0100	n/a	n/a	0.1504
B1(HL)	!A1&!A2&!B2&C	0.0100	n/a	n/a	0.1333
B1(HL)	!A1&!A2&B2&C	0.0100	n/a	n/a	0.1331
B1(HL)	!A1&A2&!B2&C	0.0100	n/a	n/a	0.1333
B1(HL)	!A1&A2&B2&C	0.0100	n/a	n/a	0.1331
B1(HL)	A1&!A2&!B2&C	0.0100	n/a	n/a	0.1331
B1(HL)	A1&!A2&B2&C	0.0100	n/a	n/a	0.1331
B1(HL)	A1&A2&!B2&!C	0.0100	n/a	n/a	0.1332
B1(HL)	A1&A2&!B2&C	0.0100	n/a	n/a	0.1332
B1(HL)	A1&A2&B2&!C	0.0100	n/a	n/a	0.1331
B1(HL)	A1&A2&B2&C	0.0100	n/a	n/a	0.1331
B2(HL)	!A1&!A2&!B1&!C	0.0100	n/a	n/a	0.1493
B2(HL)	!A1&A2&!B1&!C	0.0100	n/a	n/a	0.1493
B2(HL)	A1&!A2&!B1&!C	0.0100	n/a	n/a	0.1493
B2(HL)	!A1&!A2&!B1&C	0.0100	n/a	n/a	0.1331
B2(HL)	!A1&!A2&B1&C	0.0100	n/a	n/a	0.1329
B2(HL)	!A1&A2&!B1&C	0.0100	n/a	n/a	0.1331
B2(HL)	!A1&A2&B1&C	0.0100	n/a	n/a	0.1329
B2(HL)	A1&!A2&!B1&C	0.0100	n/a	n/a	0.1331
B2(HL)	A1&!A2&B1&C	0.0100	n/a	n/a	0.1329
B2(HL)	A1&A2&!B1&!C	0.0100	n/a	n/a	0.1331
B2(HL)	A1&A2&!B1&C	0.0100	n/a	n/a	0.1331
B2(HL)	A1&A2&B1&!C	0.0100	n/a	n/a	0.1331
B2(HL)	A1&A2&B1&C	0.0100	n/a	n/a	0.1329
A1(HL)	!A2&!B1&!B2&!C	0.0100	n/a	n/a	0.1743

continues on next page

Table 23 – continued from previous page

A1(HL)	!A2&!B1&B2&!C	0.0100	n/a	n/a	0.1742
A1(HL)	!A2&B1&!B2&!C	0.0100	n/a	n/a	0.1742
A1(HL)	!A2&!B1&!B2&C	0.0100	n/a	n/a	0.0397
A1(HL)	!A2&!B1&B2&C	0.0100	n/a	n/a	0.0397
A1(HL)	!A2&B1&!B2&C	0.0100	n/a	n/a	0.0397
A1(HL)	!A2&B1&B2&!C	0.0100	n/a	n/a	0.0395
A1(HL)	!A2&B1&B2&C	0.0100	n/a	n/a	0.0397
A1(HL)	A2&!B1&!B2&C	0.0100	n/a	n/a	0.1588
A1(HL)	A2&!B1&B2&C	0.0100	n/a	n/a	0.1588
A1(HL)	A2&B1&!B2&C	0.0100	n/a	n/a	0.1589
A1(HL)	A2&B1&B2&!C	0.0100	n/a	n/a	0.2827
A1(HL)	A2&B1&B2&C	0.0100	n/a	n/a	0.1588
B1(LH)	!A1&!A2&!B2&!C	0.0100	n/a	n/a	-0.0910
B1(LH)	!A1&A2&!B2&!C	0.0100	n/a	n/a	-0.0910
B1(LH)	A1&!A2&!B2&!C	0.0100	n/a	n/a	-0.0910
B1(LH)	!A1&!A2&!B2&C	0.0100	n/a	n/a	-0.1325
B1(LH)	!A1&!A2&B2&C	0.0100	n/a	n/a	-0.1126
B1(LH)	!A1&A2&!B2&C	0.0100	n/a	n/a	-0.1325
B1(LH)	!A1&A2&B2&C	0.0100	n/a	n/a	-0.1126
B1(LH)	A1&!A2&!B2&C	0.0100	n/a	n/a	-0.1326
B1(LH)	A1&!A2&B2&C	0.0100	n/a	n/a	-0.1126
B1(LH)	A1&A2&!B2&!C	0.0100	n/a	n/a	-0.1326
B1(LH)	A1&A2&!B2&C	0.0100	n/a	n/a	-0.1326
B1(LH)	A1&A2&B2&!C	0.0100	n/a	n/a	-0.1060
B1(LH)	A1&A2&B2&C	0.0100	n/a	n/a	-0.1155
C(LH)	!A1&!A2&B1&B2	0.0100	n/a	n/a	-0.0451
C(LH)	!A1&A2&B1&B2	0.0100	n/a	n/a	-0.0451
C(LH)	A1&!A2&B1&B2	0.0100	n/a	n/a	-0.0452
C(LH)	A1&A2&!B1&!B2	0.0100	n/a	n/a	-0.1158
C(LH)	A1&A2&!B1&B2	0.0100	n/a	n/a	-0.1140
C(LH)	A1&A2&B1&!B2	0.0100	n/a	n/a	-0.1139
C(LH)	A1&A2&B1&B2	0.0100	n/a	n/a	-0.0855
A2(LH)	!A1&!B1&!B2&!C	0.0100	n/a	n/a	-0.1576
A2(LH)	!A1&!B1&B2&!C	0.0100	n/a	n/a	-0.1576
A2(LH)	!A1&B1&!B2&!C	0.0100	n/a	n/a	-0.1576
A2(LH)	!A1&!B1&!B2&C	0.0100	n/a	n/a	-0.0371
A2(LH)	!A1&!B1&B2&C	0.0100	n/a	n/a	-0.0371
A2(LH)	!A1&B1&!B2&C	0.0100	n/a	n/a	-0.0371
A2(LH)	!A1&B1&B2&!C	0.0100	n/a	n/a	-0.0371
A2(LH)	!A1&B1&B2&C	0.0100	n/a	n/a	-0.0371
A2(LH)	A1&!B1&!B2&C	0.0100	n/a	n/a	-0.0402
A2(LH)	A1&!B1&B2&C	0.0100	n/a	n/a	-0.0402
A2(LH)	A1&B1&!B2&C	0.0100	n/a	n/a	-0.0402
A2(LH)	A1&B1&B2&!C	0.0100	n/a	n/a	-0.0399
A2(LH)	A1&B1&B2&C	0.0100	n/a	n/a	-0.0402

LEAKAGE POWER

When Condition	Power (nW)
!A1&!A2&!B1&!B2&!C	0.3544
!A1&!A2&!B1&B2&!C	0.3553
!A1&!A2&B1&!B2&!C	0.5151
!A1&A2&!B1&!B2&!C	0.3553
!A1&A2&!B1&B2&!C	0.3562
!A1&A2&B1&!B2&!C	0.5160
A1&!A2&!B1&!B2&!C	0.5151
A1&!A2&!B1&B2&!C	0.5160
A1&!A2&B1&!B2&!C	0.6757
!A1&!A2&!B1&!B2&C	0.4711
!A1&!A2&!B1&B2&C	0.4711
!A1&!A2&B1&!B2&C	0.4711
!A1&!A2&B1&B2&!C	0.6863
!A1&!A2&B1&B2&C	0.4711
!A1&A2&!B1&!B2&C	0.4802
!A1&A2&!B1&B2&C	0.4802
!A1&A2&B1&!B2&C	0.4802
!A1&A2&B1&B2&!C	0.6951
!A1&A2&B1&B2&C	0.4802
A1&!A2&!B1&!B2&C	0.4802
A1&!A2&!B1&B2&C	0.4802
A1&!A2&B1&!B2&C	0.4802
A1&!A2&B1&B2&!C	0.6951
A1&!A2&B1&B2&C	0.4802
A1&A2&!B1&!B2&!C	0.2619
A1&A2&!B1&!B2&C	0.2619
A1&A2&!B1&B2&!C	0.2619
A1&A2&!B1&B2&C	0.2619
A1&A2&B1&!B2&!C	0.2619
A1&A2&B1&!B2&C	0.2619
A1&A2&B1&B2&!C	0.2620
A1&A2&B1&B2&C	0.2620

gf180mcu_fd_sc_mcu7t5v0__aoi222_1

gf180mcu_fd_sc_mcu7t5v0__aoi222_1 symbol

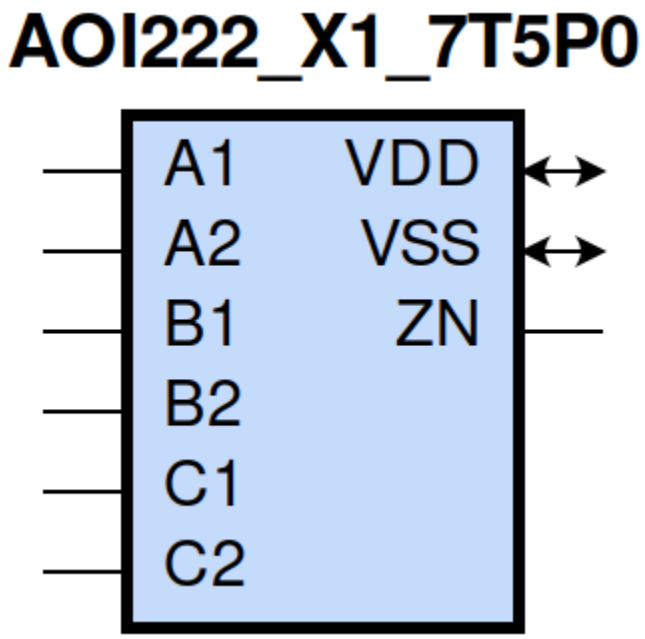

gf180mcu_fd_sc_mcu7t5v0__aoi222_1 schematic

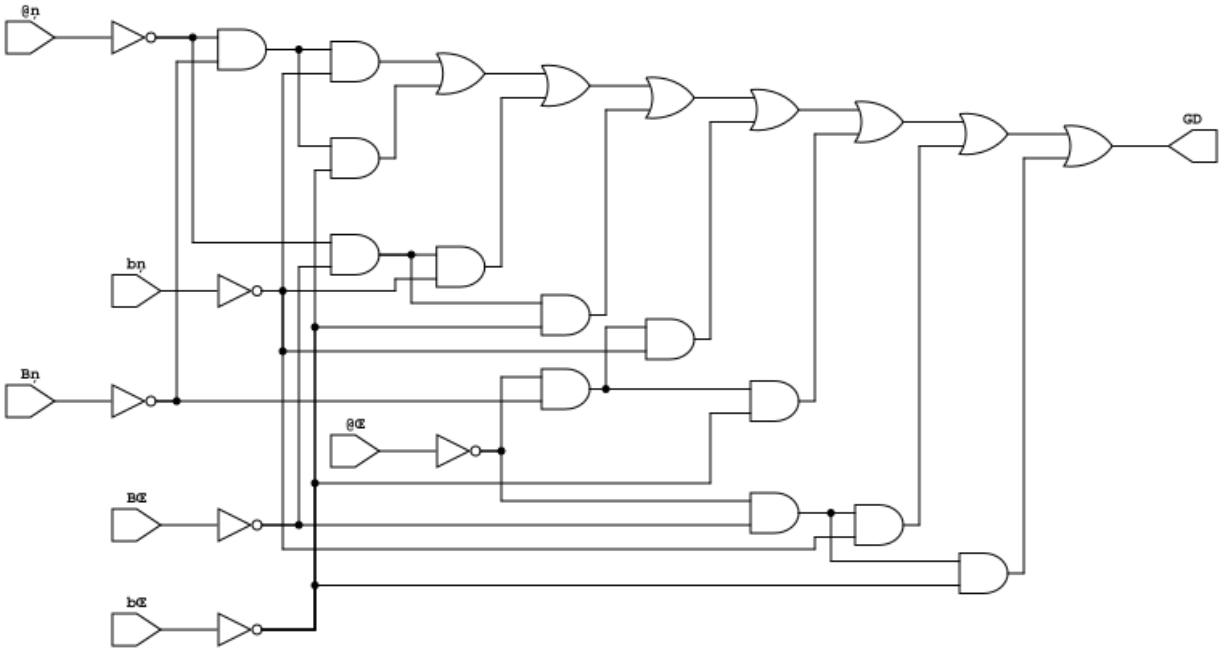

gf180mcu_fd_sc_mcu7t5v0__aoi222_1 layout

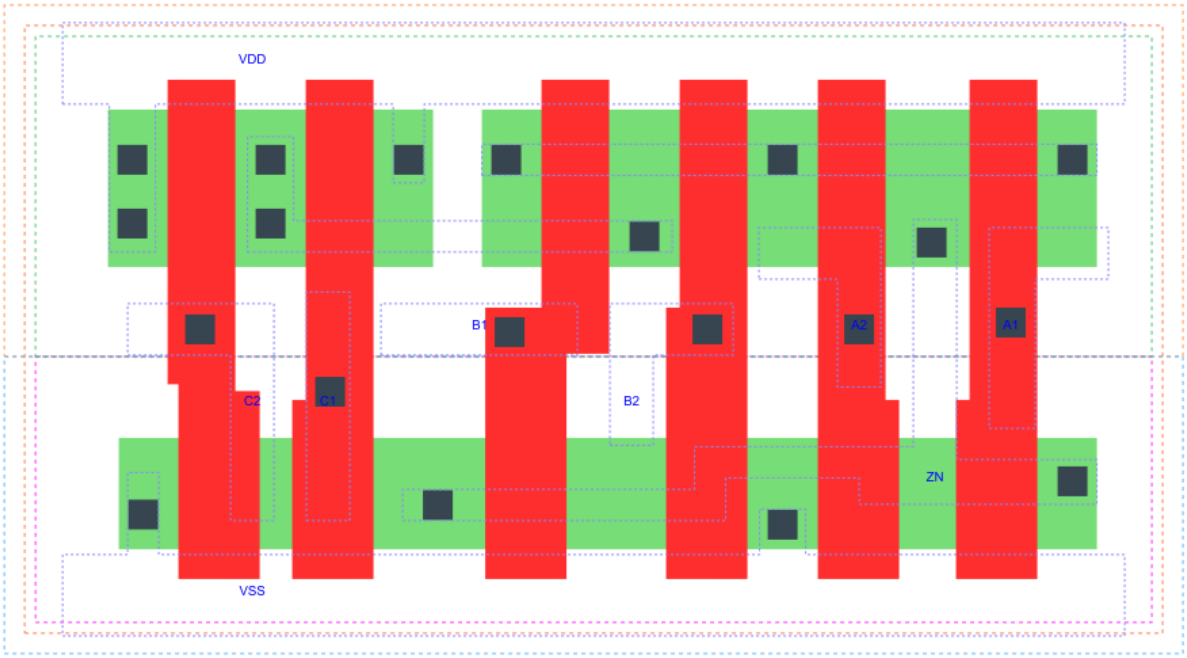

AOI222_X1 is a three 2-input AND into 3-input NOR, NOR[AND(A1,A2),AND(B1,B2),AND(C1,C2)], 1X drive strength

Attributes

Attribute	Value
area	30.732800 μm^2

OUTPUT FUNCTIONS

Output Pin	Function
ZN	(((!A1)&(!B1)&(!C1))|((!A1)&(!B1)&(!C2))|((!A1)&(!B2)&(!C1))|((!A1)&(!B2)&(!C2))|((!A2)&(!B1)&(!C1))|((!A2)&(!E

TRUTH TABLE FOR ZN

A1	A2	B1	B2	C1	C2	ZN
0	?	0	?	0	?	1
0	?	0	?	?	0	1
0	?	?	0	0	?	1
0	?	?	0	?	0	1
?	0	0	?	0	?	1
?	0	0	?	?	0	1
?	0	?	0	0	?	1
?	0	?	0	?	0	1
1	1	?	?	?	?	0
?	?	1	1	?	?	0
?	?	?	?	1	1	0

FUNCTIONAL SCHEMATIC

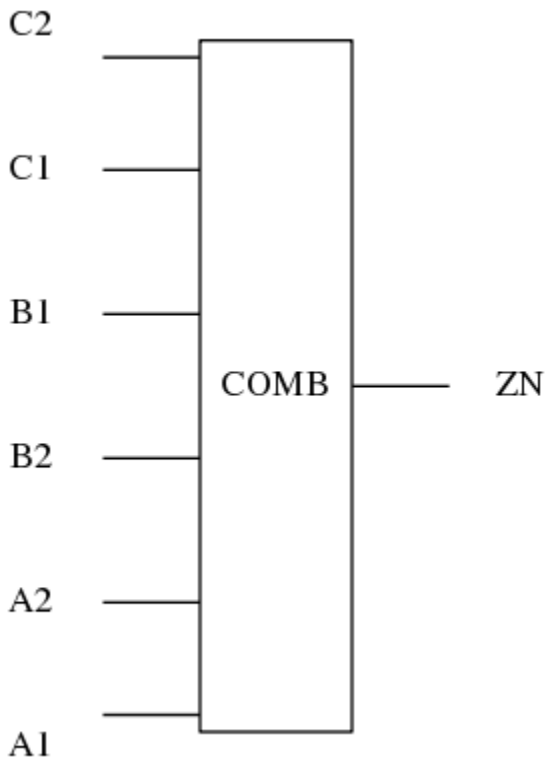

PIN CAPACITANCE (pf)

Pin	Type	Capacitance (pf)
C2	input	0.0047
C1	input	0.0046
B1	input	0.0046
B2	input	0.0045
A2	input	0.0047
A1	input	0.0048

DELAY AND OUTPUT TRANSITION TIME corresponding to min slew and load

Input Pin	Output	When Condition	Tin (ns)	Out Load (pf)	Delay (ns)	Tout (ns)
C2(LH)	ZN(HL)	!A1&!A2&!B1&!B2&C1	0.0100	0.0010	0.1736	0.1201
C2(LH)	ZN(HL)	!A1&!A2&!B1&B2&C1	0.0100	0.0010	0.1639	0.1134
C2(LH)	ZN(HL)	!A1&!A2&B1&!B2&C1	0.0100	0.0010	0.1781	0.1378
C2(LH)	ZN(HL)	!A1&A2&!B1&!B2&C1	0.0100	0.0010	0.1339	0.1034
C2(LH)	ZN(HL)	!A1&A2&!B1&B2&C1	0.0100	0.0010	0.1293	0.0979
C2(LH)	ZN(HL)	!A1&A2&B1&!B2&C1	0.0100	0.0010	0.1435	0.1247
C2(LH)	ZN(HL)	A1&!A2&!B1&!B2&C1	0.0100	0.0010	0.1480	0.1280
C2(LH)	ZN(HL)	A1&!A2&!B1&B2&C1	0.0100	0.0010	0.1426	0.1217
C2(LH)	ZN(HL)	A1&!A2&B1&!B2&C1	0.0100	0.0010	0.1580	0.1474
C2(HL)	ZN(LH)	!A1&!A2&!B1&!B2&C1	0.0100	0.0010	0.3003	0.1863
C2(HL)	ZN(LH)	!A1&!A2&!B1&B2&C1	0.0100	0.0010	0.3499	0.2310
C2(HL)	ZN(LH)	!A1&!A2&B1&!B2&C1	0.0100	0.0010	0.4067	0.2744
C2(HL)	ZN(LH)	!A1&A2&!B1&!B2&C1	0.0100	0.0010	0.3520	0.1946
C2(HL)	ZN(LH)	!A1&A2&!B1&B2&C1	0.0100	0.0010	0.3965	0.2329
C2(HL)	ZN(LH)	!A1&A2&B1&!B2&C1	0.0100	0.0010	0.4637	0.2845
C2(HL)	ZN(LH)	A1&!A2&!B1&!B2&C1	0.0100	0.0010	0.4029	0.2329
C2(HL)	ZN(LH)	A1&!A2&!B1&B2&C1	0.0100	0.0010	0.4566	0.2793
C2(HL)	ZN(LH)	A1&!A2&B1&!B2&C1	0.0100	0.0010	0.5237	0.3313
C1(LH)	ZN(HL)	!A1&!A2&!B1&!B2&C2	0.0100	0.0010	0.1628	0.1207
C1(LH)	ZN(HL)	!A1&!A2&!B1&B2&C2	0.0100	0.0010	0.1528	0.1134
C1(LH)	ZN(HL)	!A1&!A2&B1&!B2&C2	0.0100	0.0010	0.1672	0.1381
C1(LH)	ZN(HL)	!A1&A2&!B1&!B2&C2	0.0100	0.0010	0.1228	0.1039
C1(LH)	ZN(HL)	!A1&A2&!B1&B2&C2	0.0100	0.0010	0.1182	0.0985
C1(LH)	ZN(HL)	!A1&A2&B1&!B2&C2	0.0100	0.0010	0.1324	0.1251
C1(LH)	ZN(HL)	A1&!A2&!B1&!B2&C2	0.0100	0.0010	0.1370	0.1284
C1(LH)	ZN(HL)	A1&!A2&!B1&B2&C2	0.0100	0.0010	0.1315	0.1221
C1(LH)	ZN(HL)	A1&!A2&B1&!B2&C2	0.0100	0.0010	0.1470	0.1478
C1(HL)	ZN(LH)	!A1&!A2&!B1&!B2&C2	0.0100	0.0010	0.2694	0.1575
C1(HL)	ZN(LH)	!A1&!A2&!B1&B2&C2	0.0100	0.0010	0.3118	0.1948
C1(HL)	ZN(LH)	!A1&!A2&B1&!B2&C2	0.0100	0.0010	0.3698	0.2378
C1(HL)	ZN(LH)	!A1&A2&!B1&!B2&C2	0.0100	0.0010	0.3138	0.1588
C1(HL)	ZN(LH)	!A1&A2&!B1&B2&C2	0.0100	0.0010	0.3510	0.1890
C1(HL)	ZN(LH)	!A1&A2&B1&!B2&C2	0.0100	0.0010	0.4201	0.2407
C1(HL)	ZN(LH)	A1&!A2&!B1&!B2&C2	0.0100	0.0010	0.3662	0.1963
C1(HL)	ZN(LH)	A1&!A2&!B1&B2&C2	0.0100	0.0010	0.4131	0.2355
C1(HL)	ZN(LH)	A1&!A2&B1&!B2&C2	0.0100	0.0010	0.4810	0.2872

continues on next page

Table 25 – continued from previous page

B1(LH)	ZN(HL)	!A1&!A2&B2&!C1&!C2	0.0100	0.0010	0.1340	0.0905
B1(LH)	ZN(HL)	!A1&!A2&B2&!C1&C2	0.0100	0.0010	0.1344	0.0902
B1(LH)	ZN(HL)	!A1&!A2&B2&C1&!C2	0.0100	0.0010	0.1442	0.1085
B1(LH)	ZN(HL)	!A1&A2&B2&!C1&!C2	0.0100	0.0010	0.1119	0.0813
B1(LH)	ZN(HL)	!A1&A2&B2&!C1&C2	0.0100	0.0010	0.1122	0.0814
B1(LH)	ZN(HL)	!A1&A2&B2&C1&!C2	0.0100	0.0010	0.1222	0.1003
B1(LH)	ZN(HL)	A1&!A2&B2&!C1&!C2	0.0100	0.0010	0.1223	0.1016
B1(LH)	ZN(HL)	A1&!A2&B2&!C1&C2	0.0100	0.0010	0.1225	0.1017
B1(LH)	ZN(HL)	A1&!A2&B2&C1&!C2	0.0100	0.0010	0.1338	0.1202
B1(HL)	ZN(LH)	!A1&!A2&B2&!C1&!C2	0.0100	0.0010	0.2136	0.1464
B1(HL)	ZN(LH)	!A1&!A2&B2&!C1&C2	0.0100	0.0010	0.2571	0.1941
B1(HL)	ZN(LH)	!A1&!A2&B2&C1&!C2	0.0100	0.0010	0.3057	0.2304
B1(HL)	ZN(LH)	!A1&A2&B2&!C1&!C2	0.0100	0.0010	0.2517	0.1504
B1(HL)	ZN(LH)	!A1&A2&B2&!C1&C2	0.0100	0.0010	0.2965	0.1885
B1(HL)	ZN(LH)	!A1&A2&B2&C1&!C2	0.0100	0.0010	0.3543	0.2322
B1(HL)	ZN(LH)	A1&!A2&B2&!C1&!C2	0.0100	0.0010	0.3029	0.1890
B1(HL)	ZN(LH)	A1&!A2&B2&!C1&C2	0.0100	0.0010	0.3582	0.2353
B1(HL)	ZN(LH)	A1&!A2&B2&C1&!C2	0.0100	0.0010	0.4156	0.2789
B2(HL)	ZN(LH)	!A1&!A2&B1&!C1&!C2	0.0100	0.0010	0.2522	0.1813
B2(HL)	ZN(LH)	!A1&!A2&B1&!C1&C2	0.0100	0.0010	0.3051	0.2376
B2(HL)	ZN(LH)	!A1&!A2&B1&C1&!C2	0.0100	0.0010	0.3527	0.2741
B2(HL)	ZN(LH)	!A1&A2&B1&!C1&!C2	0.0100	0.0010	0.2989	0.1937
B2(HL)	ZN(LH)	!A1&A2&B1&!C1&C2	0.0100	0.0010	0.3538	0.2407
B2(HL)	ZN(LH)	!A1&A2&B1&C1&!C2	0.0100	0.0010	0.4101	0.2842
B2(HL)	ZN(LH)	A1&!A2&B1&!C1&!C2	0.0100	0.0010	0.3495	0.2323
B2(HL)	ZN(LH)	A1&!A2&B1&!C1&C2	0.0100	0.0010	0.4142	0.2873
B2(HL)	ZN(LH)	A1&!A2&B1&C1&!C2	0.0100	0.0010	0.4704	0.3312
B2(LH)	ZN(HL)	!A1&!A2&B1&!C1&!C2	0.0100	0.0010	0.1478	0.0906
B2(LH)	ZN(HL)	!A1&!A2&B1&!C1&C2	0.0100	0.0010	0.1482	0.0903
B2(LH)	ZN(HL)	!A1&!A2&B1&C1&!C2	0.0100	0.0010	0.1580	0.1085
B2(LH)	ZN(HL)	!A1&A2&B1&!C1&!C2	0.0100	0.0010	0.1258	0.0810
B2(LH)	ZN(HL)	!A1&A2&B1&!C1&C2	0.0100	0.0010	0.1261	0.0810
B2(LH)	ZN(HL)	!A1&A2&B1&C1&!C2	0.0100	0.0010	0.1361	0.0999
B2(LH)	ZN(HL)	A1&!A2&B1&!C1&!C2	0.0100	0.0010	0.1362	0.1012
B2(LH)	ZN(HL)	A1&!A2&B1&!C1&C2	0.0100	0.0010	0.1365	0.1013
B2(LH)	ZN(HL)	A1&!A2&B1&C1&!C2	0.0100	0.0010	0.1477	0.1198
A2(HL)	ZN(LH)	A1&!B1&!B2&!C1&!C2	0.0100	0.0010	0.1601	0.1431
A2(HL)	ZN(LH)	A1&!B1&!B2&!C1&C2	0.0100	0.0010	0.1762	0.1798
A2(HL)	ZN(LH)	A1&!B1&!B2&C1&!C2	0.0100	0.0010	0.2216	0.2207
A2(HL)	ZN(LH)	A1&!B1&B2&!C1&!C2	0.0100	0.0010	0.1926	0.1842
A2(HL)	ZN(LH)	A1&!B1&B2&!C1&C2	0.0100	0.0010	0.2102	0.2237
A2(HL)	ZN(LH)	A1&!B1&B2&C1&!C2	0.0100	0.0010	0.2654	0.2721
A2(HL)	ZN(LH)	A1&B1&!B2&!C1&!C2	0.0100	0.0010	0.2480	0.2299
A2(HL)	ZN(LH)	A1&B1&!B2&!C1&C2	0.0100	0.0010	0.2762	0.2809
A2(HL)	ZN(LH)	A1&B1&!B2&C1&!C2	0.0100	0.0010	0.3320	0.3272
A2(LH)	ZN(HL)	A1&!B1&!B2&!C1&!C2	0.0100	0.0010	0.0895	0.0503
A2(LH)	ZN(HL)	A1&!B1&!B2&!C1&C2	0.0100	0.0010	0.0895	0.0503
A2(LH)	ZN(HL)	A1&!B1&!B2&C1&!C2	0.0100	0.0010	0.0952	0.0661
A2(LH)	ZN(HL)	A1&!B1&B2&!C1&!C2	0.0100	0.0010	0.0896	0.0503
A2(LH)	ZN(HL)	A1&!B1&B2&!C1&C2	0.0100	0.0010	0.0896	0.0503
A2(LH)	ZN(HL)	A1&!B1&B2&C1&!C2	0.0100	0.0010	0.0954	0.0661
A2(LH)	ZN(HL)	A1&B1&!B2&!C1&!C2	0.0100	0.0010	0.0955	0.0693

continues on next page

Table 25 – continued from previous page

A2(LH)	ZN(HL)	A1&B1&!B2&!C1&C2	0.0100	0.0010	0.0955	0.0693
A2(LH)	ZN(HL)	A1&B1&!B2&C1&!C2	0.0100	0.0010	0.1035	0.0855
A1(HL)	ZN(LH)	A2&!B1&!B2&!C1&!C2	0.0100	0.0010	0.1285	0.1105
A1(HL)	ZN(LH)	A2&!B1&!B2&!C1&C2	0.0100	0.0010	0.1384	0.1359
A1(HL)	ZN(LH)	A2&!B1&!B2&C1&!C2	0.0100	0.0010	0.1829	0.1780
A1(HL)	ZN(LH)	A2&!B1&B2&!C1&!C2	0.0100	0.0010	0.1523	0.1427
A1(HL)	ZN(LH)	A2&!B1&B2&!C1&C2	0.0100	0.0010	0.1633	0.1715
A1(HL)	ZN(LH)	A2&!B1&B2&C1&!C2	0.0100	0.0010	0.2185	0.2216
A1(HL)	ZN(LH)	A2&B1&!B2&!C1&!C2	0.0100	0.0010	0.2085	0.1894
A1(HL)	ZN(LH)	A2&B1&!B2&!C1&C2	0.0100	0.0010	0.2289	0.2311
A1(HL)	ZN(LH)	A2&B1&!B2&C1&!C2	0.0100	0.0010	0.2853	0.2787
A1(LH)	ZN(HL)	A2&!B1&!B2&!C1&!C2	0.0100	0.0010	0.0774	0.0503
A1(LH)	ZN(HL)	A2&!B1&!B2&!C1&C2	0.0100	0.0010	0.0775	0.0503
A1(LH)	ZN(HL)	A2&!B1&!B2&C1&!C2	0.0100	0.0010	0.0833	0.0660
A1(LH)	ZN(HL)	A2&!B1&B2&!C1&!C2	0.0100	0.0010	0.0776	0.0503
A1(LH)	ZN(HL)	A2&!B1&B2&!C1&C2	0.0100	0.0010	0.0776	0.0503
A1(LH)	ZN(HL)	A2&!B1&B2&C1&!C2	0.0100	0.0010	0.0834	0.0662
A1(LH)	ZN(HL)	A2&B1&!B2&!C1&!C2	0.0100	0.0010	0.0835	0.0694
A1(LH)	ZN(HL)	A2&B1&!B2&!C1&C2	0.0100	0.0010	0.0835	0.0694
A1(LH)	ZN(HL)	A2&B1&!B2&C1&!C2	0.0100	0.0010	0.0915	0.0856

DYNAMIC ENERGY

Input Pin	When Condition	Tin (ns)	Output	Out Load (pf)	Energy (uW/MHz)
A1	A2&!B1&!B2&!C1&!C2	0.0100	ZN(LH)	0.0010	0.1634
A1	A2&!B1&!B2&!C1&C2	0.0100	ZN(LH)	0.0010	0.1635
A1	A2&!B1&!B2&C1&!C2	0.0100	ZN(LH)	0.0010	0.2041
A1	A2&!B1&B2&!C1&!C2	0.0100	ZN(LH)	0.0010	0.1633
A1	A2&!B1&B2&!C1&C2	0.0100	ZN(LH)	0.0010	0.1634
A1	A2&!B1&B2&C1&!C2	0.0100	ZN(LH)	0.0010	0.2039
A1	A2&B1&!B2&!C1&!C2	0.0100	ZN(LH)	0.0010	0.2119
A1	A2&B1&!B2&!C1&C2	0.0100	ZN(LH)	0.0010	0.2120
A1	A2&B1&!B2&C1&!C2	0.0100	ZN(LH)	0.0010	0.2523
B2	!A1&!A2&B1&!C1&!C2	0.0100	ZN(LH)	0.0010	0.2856
B2	!A1&!A2&B1&!C1&C2	0.0100	ZN(LH)	0.0010	0.2856
B2	!A1&!A2&B1&C1&!C2	0.0100	ZN(LH)	0.0010	0.3255
B2	!A1&A2&B1&!C1&!C2	0.0100	ZN(LH)	0.0010	0.2647
B2	!A1&A2&B1&!C1&C2	0.0100	ZN(LH)	0.0010	0.2646
B2	!A1&A2&B1&C1&!C2	0.0100	ZN(LH)	0.0010	0.3045
B2	A1&!A2&B1&!C1&!C2	0.0100	ZN(LH)	0.0010	0.3075
B2	A1&!A2&B1&!C1&C2	0.0100	ZN(LH)	0.0010	0.3075
B2	A1&!A2&B1&C1&!C2	0.0100	ZN(LH)	0.0010	0.3473
B1	!A1&!A2&B2&!C1&!C2	0.0100	ZN(HL)	0.0010	0.0654
B1	!A1&!A2&B2&!C1&C2	0.0100	ZN(HL)	0.0010	0.0659
B1	!A1&!A2&B2&C1&!C2	0.0100	ZN(HL)	0.0010	0.0659
B1	!A1&A2&B2&!C1&!C2	0.0100	ZN(HL)	0.0010	0.0592
B1	!A1&A2&B2&!C1&C2	0.0100	ZN(HL)	0.0010	0.0596

continues on next page

Table 26 – continued from previous page

B1	!A1&A2&B2&C1&!C2	0.0100	ZN(HL)	0.0010	0.0598
B1	A1&!A2&B2&!C1&!C2	0.0100	ZN(HL)	0.0010	0.0593
B1	A1&!A2&B2&!C1&C2	0.0100	ZN(HL)	0.0010	0.0598
B1	A1&!A2&B2&C1&!C2	0.0100	ZN(HL)	0.0010	0.0597
A2	A1&!B1&!B2&!C1&!C2	0.0100	ZN(LH)	0.0010	0.2006
A2	A1&!B1&!B2&!C1&C2	0.0100	ZN(LH)	0.0010	0.2007
A2	A1&!B1&!B2&C1&!C2	0.0100	ZN(LH)	0.0010	0.2405
A2	A1&!B1&B2&!C1&!C2	0.0100	ZN(LH)	0.0010	0.2006
A2	A1&!B1&B2&!C1&C2	0.0100	ZN(LH)	0.0010	0.2007
A2	A1&!B1&B2&C1&!C2	0.0100	ZN(LH)	0.0010	0.2406
A2	A1&B1&!B2&!C1&!C2	0.0100	ZN(LH)	0.0010	0.2485
A2	A1&B1&!B2&!C1&C2	0.0100	ZN(LH)	0.0010	0.2485
A2	A1&B1&!B2&C1&!C2	0.0100	ZN(LH)	0.0010	0.2884
B1	!A1&!A2&B2&!C1&!C2	0.0100	ZN(LH)	0.0010	0.2428
B1	!A1&!A2&B2&!C1&C2	0.0100	ZN(LH)	0.0010	0.2428
B1	!A1&!A2&B2&C1&!C2	0.0100	ZN(LH)	0.0010	0.2835
B1	!A1&A2&B2&!C1&!C2	0.0100	ZN(LH)	0.0010	0.2219
B1	!A1&A2&B2&!C1&C2	0.0100	ZN(LH)	0.0010	0.2219
B1	!A1&A2&B2&C1&!C2	0.0100	ZN(LH)	0.0010	0.2624
B1	A1&!A2&B2&!C1&!C2	0.0100	ZN(LH)	0.0010	0.2654
B1	A1&!A2&B2&!C1&C2	0.0100	ZN(LH)	0.0010	0.2654
B1	A1&!A2&B2&C1&!C2	0.0100	ZN(LH)	0.0010	0.3056
C1	!A1&!A2&!B1&!B2&C2	0.0100	ZN(HL)	0.0010	0.1103
C1	!A1&!A2&!B1&B2&C2	0.0100	ZN(HL)	0.0010	0.1041
C1	!A1&!A2&B1&!B2&C2	0.0100	ZN(HL)	0.0010	0.1042
C1	!A1&A2&!B1&!B2&C2	0.0100	ZN(HL)	0.0010	0.1042
C1	!A1&A2&!B1&B2&C2	0.0100	ZN(HL)	0.0010	0.0981
C1	!A1&A2&B1&!B2&C2	0.0100	ZN(HL)	0.0010	0.0981
C1	A1&!A2&!B1&!B2&C2	0.0100	ZN(HL)	0.0010	0.1042
C1	A1&!A2&!B1&B2&C2	0.0100	ZN(HL)	0.0010	0.0981
C1	A1&!A2&B1&!B2&C2	0.0100	ZN(HL)	0.0010	0.0981
A2	A1&!B1&!B2&!C1&!C2	0.0100	ZN(HL)	0.0010	0.0064
A2	A1&!B1&!B2&!C1&C2	0.0100	ZN(HL)	0.0010	0.0064
A2	A1&!B1&!B2&C1&!C2	0.0100	ZN(HL)	0.0010	0.0064
A2	A1&!B1&B2&!C1&!C2	0.0100	ZN(HL)	0.0010	0.0066
A2	A1&!B1&B2&!C1&C2	0.0100	ZN(HL)	0.0010	0.0066
A2	A1&!B1&B2&C1&!C2	0.0100	ZN(HL)	0.0010	0.0066
A2	A1&B1&!B2&!C1&!C2	0.0100	ZN(HL)	0.0010	0.0067
A2	A1&B1&!B2&!C1&C2	0.0100	ZN(HL)	0.0010	0.0067
A2	A1&B1&!B2&C1&!C2	0.0100	ZN(HL)	0.0010	0.0066
C2	!A1&!A2&!B1&!B2&C1	0.0100	ZN(HL)	0.0010	0.1103
C2	!A1&!A2&!B1&B2&C1	0.0100	ZN(HL)	0.0010	0.1041
C2	!A1&!A2&B1&!B2&C1	0.0100	ZN(HL)	0.0010	0.1042
C2	!A1&A2&!B1&!B2&C1	0.0100	ZN(HL)	0.0010	0.1042
C2	!A1&A2&!B1&B2&C1	0.0100	ZN(HL)	0.0010	0.0981
C2	!A1&A2&B1&!B2&C1	0.0100	ZN(HL)	0.0010	0.0981
C2	A1&!A2&!B1&!B2&C1	0.0100	ZN(HL)	0.0010	0.1042
C2	A1&!A2&!B1&B2&C1	0.0100	ZN(HL)	0.0010	0.0981
C2	A1&!A2&B1&!B2&C1	0.0100	ZN(HL)	0.0010	0.0981
C1	!A1&!A2&!B1&!B2&C2	0.0100	ZN(LH)	0.0010	0.3168
C1	!A1&!A2&!B1&B2&C2	0.0100	ZN(LH)	0.0010	0.2962
C1	!A1&!A2&B1&!B2&C2	0.0100	ZN(LH)	0.0010	0.3449

continues on next page

Table 26 – continued from previous page

C1	!A1&A2&!B1&!B2&C2	0.0100	ZN(LH)	0.0010	0.2957
C1	!A1&A2&!B1&B2&C2	0.0100	ZN(LH)	0.0010	0.2752
C1	!A1&A2&B1&!B2&C2	0.0100	ZN(LH)	0.0010	0.3240
C1	A1&!A2&!B1&!B2&C2	0.0100	ZN(LH)	0.0010	0.3393
C1	A1&!A2&!B1&B2&C2	0.0100	ZN(LH)	0.0010	0.3188
C1	A1&!A2&B1&!B2&C2	0.0100	ZN(LH)	0.0010	0.3671
C2	!A1&!A2&!B1&!B2&C1	0.0100	ZN(LH)	0.0010	0.3510
C2	!A1&!A2&!B1&B2&C1	0.0100	ZN(LH)	0.0010	0.3305
C2	!A1&!A2&B1&!B2&C1	0.0100	ZN(LH)	0.0010	0.3784
C2	!A1&A2&!B1&!B2&C1	0.0100	ZN(LH)	0.0010	0.3301
C2	!A1&A2&!B1&B2&C1	0.0100	ZN(LH)	0.0010	0.3096
C2	!A1&A2&B1&!B2&C1	0.0100	ZN(LH)	0.0010	0.3574
C2	A1&!A2&!B1&!B2&C1	0.0100	ZN(LH)	0.0010	0.3728
C2	A1&!A2&!B1&B2&C1	0.0100	ZN(LH)	0.0010	0.3523
C2	A1&!A2&B1&!B2&C1	0.0100	ZN(LH)	0.0010	0.4001
A1	A2&!B1&!B2&!C1&!C2	0.0100	ZN(HL)	0.0010	0.0065
A1	A2&!B1&!B2&!C1&C2	0.0100	ZN(HL)	0.0010	0.0065
A1	A2&!B1&!B2&C1&!C2	0.0100	ZN(HL)	0.0010	0.0065
A1	A2&!B1&B2&!C1&!C2	0.0100	ZN(HL)	0.0010	0.0067
A1	A2&!B1&B2&!C1&C2	0.0100	ZN(HL)	0.0010	0.0067
A1	A2&!B1&B2&C1&!C2	0.0100	ZN(HL)	0.0010	0.0067
A1	A2&B1&!B2&!C1&!C2	0.0100	ZN(HL)	0.0010	0.0067
A1	A2&B1&!B2&!C1&C2	0.0100	ZN(HL)	0.0010	0.0067
A1	A2&B1&!B2&C1&!C2	0.0100	ZN(HL)	0.0010	0.0067
B2	!A1&!A2&B1&!C1&!C2	0.0100	ZN(HL)	0.0010	0.0654
B2	!A1&!A2&B1&!C1&C2	0.0100	ZN(HL)	0.0010	0.0658
B2	!A1&!A2&B1&C1&!C2	0.0100	ZN(HL)	0.0010	0.0659
B2	!A1&A2&B1&!C1&!C2	0.0100	ZN(HL)	0.0010	0.0592
B2	!A1&A2&B1&!C1&C2	0.0100	ZN(HL)	0.0010	0.0596
B2	!A1&A2&B1&C1&!C2	0.0100	ZN(HL)	0.0010	0.0597
B2	A1&!A2&B1&!C1&!C2	0.0100	ZN(HL)	0.0010	0.0593
B2	A1&!A2&B1&!C1&C2	0.0100	ZN(HL)	0.0010	0.0597
B2	A1&!A2&B1&C1&!C2	0.0100	ZN(HL)	0.0010	0.0596
B2(LH)	!A1&!A2&!B1&!C1&!C2	0.0100	n/a	n/a	-0.0377
B2(LH)	!A1&!A2&!B1&!C1&C2	0.0100	n/a	n/a	-0.0377
B2(LH)	!A1&!A2&!B1&C1&!C2	0.0100	n/a	n/a	-0.0377
B2(LH)	!A1&A2&!B1&!C1&!C2	0.0100	n/a	n/a	-0.0376
B2(LH)	!A1&A2&!B1&!C1&C2	0.0100	n/a	n/a	-0.0377
B2(LH)	!A1&A2&!B1&C1&!C2	0.0100	n/a	n/a	-0.0377
B2(LH)	A1&!A2&!B1&!C1&!C2	0.0100	n/a	n/a	-0.0376
B2(LH)	A1&!A2&!B1&!C1&C2	0.0100	n/a	n/a	-0.0376
B2(LH)	A1&!A2&!B1&C1&!C2	0.0100	n/a	n/a	-0.0376
B2(LH)	!A1&!A2&!B1&C1&C2	0.0100	n/a	n/a	-0.0112
B2(LH)	!A1&!A2&B1&C1&C2	0.0100	n/a	n/a	-0.0115
B2(LH)	!A1&A2&!B1&C1&C2	0.0100	n/a	n/a	-0.0113
B2(LH)	!A1&A2&B1&C1&C2	0.0100	n/a	n/a	-0.0116
B2(LH)	A1&!A2&!B1&C1&C2	0.0100	n/a	n/a	-0.0113
B2(LH)	A1&!A2&B1&C1&C2	0.0100	n/a	n/a	-0.0116
B2(LH)	A1&A2&!B1&!C1&!C2	0.0100	n/a	n/a	-0.0374
B2(LH)	A1&A2&!B1&!C1&C2	0.0100	n/a	n/a	-0.0374
B2(LH)	A1&A2&!B1&C1&!C2	0.0100	n/a	n/a	-0.0374
B2(LH)	A1&A2&!B1&C1&C2	0.0100	n/a	n/a	-0.0213

continues on next page

Table 26 – continued from previous page

B2(LH)	A1&A2&B1&!C1&!C2	0.0100	n/a	n/a	-0.0297
B2(LH)	A1&A2&B1&!C1&C2	0.0100	n/a	n/a	-0.0294
B2(LH)	A1&A2&B1&C1&!C2	0.0100	n/a	n/a	-0.0294
B2(LH)	A1&A2&B1&C1&C2	0.0100	n/a	n/a	-0.0223
C2(HL)	!A1&!A2&!B1&!B2&!C1	0.0100	n/a	n/a	0.0417
C2(HL)	!A1&!A2&!B1&B2&!C1	0.0100	n/a	n/a	0.0417
C2(HL)	!A1&!A2&B1&!B2&!C1	0.0100	n/a	n/a	0.0417
C2(HL)	!A1&A2&!B1&!B2&!C1	0.0100	n/a	n/a	0.0417
C2(HL)	!A1&A2&!B1&B2&!C1	0.0100	n/a	n/a	0.0417
C2(HL)	!A1&A2&B1&!B2&!C1	0.0100	n/a	n/a	0.0417
C2(HL)	A1&!A2&!B1&!B2&!C1	0.0100	n/a	n/a	0.0417
C2(HL)	A1&!A2&!B1&B2&!C1	0.0100	n/a	n/a	0.0417
C2(HL)	A1&!A2&B1&!B2&!C1	0.0100	n/a	n/a	0.0417
C2(HL)	!A1&!A2&B1&B2&!C1	0.0100	n/a	n/a	0.0375
C2(HL)	!A1&!A2&B1&B2&C1	0.0100	n/a	n/a	0.0374
C2(HL)	!A1&A2&B1&B2&!C1	0.0100	n/a	n/a	0.0375
C2(HL)	!A1&A2&B1&B2&C1	0.0100	n/a	n/a	0.0374
C2(HL)	A1&!A2&B1&B2&!C1	0.0100	n/a	n/a	0.0375
C2(HL)	A1&!A2&B1&B2&C1	0.0100	n/a	n/a	0.0374
C2(HL)	A1&A2&!B1&!B2&!C1	0.0100	n/a	n/a	0.0375
C2(HL)	A1&A2&!B1&!B2&C1	0.0100	n/a	n/a	0.0374
C2(HL)	A1&A2&!B1&B2&!C1	0.0100	n/a	n/a	0.0375
C2(HL)	A1&A2&!B1&B2&C1	0.0100	n/a	n/a	0.0374
C2(HL)	A1&A2&B1&!B2&!C1	0.0100	n/a	n/a	0.0375
C2(HL)	A1&A2&B1&!B2&C1	0.0100	n/a	n/a	0.0374
C2(HL)	A1&A2&B1&B2&!C1	0.0100	n/a	n/a	0.0375
C2(HL)	A1&A2&B1&B2&C1	0.0100	n/a	n/a	0.0374
B2(HL)	!A1&!A2&!B1&!C1&!C2	0.0100	n/a	n/a	0.0421
B2(HL)	!A1&!A2&!B1&!C1&C2	0.0100	n/a	n/a	0.0420
B2(HL)	!A1&!A2&!B1&C1&!C2	0.0100	n/a	n/a	0.0420
B2(HL)	!A1&A2&!B1&!C1&!C2	0.0100	n/a	n/a	0.0421
B2(HL)	!A1&A2&!B1&!C1&C2	0.0100	n/a	n/a	0.0421
B2(HL)	!A1&A2&!B1&C1&!C2	0.0100	n/a	n/a	0.0421
B2(HL)	A1&!A2&!B1&!C1&!C2	0.0100	n/a	n/a	0.0421
B2(HL)	A1&!A2&!B1&!C1&C2	0.0100	n/a	n/a	0.0420
B2(HL)	A1&!A2&!B1&C1&!C2	0.0100	n/a	n/a	0.0420
B2(HL)	!A1&!A2&!B1&C1&C2	0.0100	n/a	n/a	0.0119
B2(HL)	!A1&!A2&B1&C1&C2	0.0100	n/a	n/a	0.0396
B2(HL)	!A1&A2&!B1&C1&C2	0.0100	n/a	n/a	0.0119
B2(HL)	!A1&A2&B1&C1&C2	0.0100	n/a	n/a	0.0394
B2(HL)	A1&!A2&!B1&C1&C2	0.0100	n/a	n/a	0.0119
B2(HL)	A1&!A2&B1&C1&C2	0.0100	n/a	n/a	0.0394
B2(HL)	A1&A2&!B1&!C1&!C2	0.0100	n/a	n/a	0.0376
B2(HL)	A1&A2&!B1&!C1&C2	0.0100	n/a	n/a	0.0375
B2(HL)	A1&A2&!B1&C1&!C2	0.0100	n/a	n/a	0.0375
B2(HL)	A1&A2&!B1&C1&C2	0.0100	n/a	n/a	0.0200
B2(HL)	A1&A2&B1&!C1&!C2	0.0100	n/a	n/a	0.0375
B2(HL)	A1&A2&B1&!C1&C2	0.0100	n/a	n/a	0.0374
B2(HL)	A1&A2&B1&C1&!C2	0.0100	n/a	n/a	0.0374
B2(HL)	A1&A2&B1&C1&C2	0.0100	n/a	n/a	0.0211
C2(LH)	!A1&!A2&!B1&!B2&!C1	0.0100	n/a	n/a	-0.0374
C2(LH)	!A1&!A2&!B1&B2&!C1	0.0100	n/a	n/a	-0.0374

continues on next page

Table 26 – continued from previous page

C2(LH)	!A1&!A2&B1&!B2&!C1	0.0100	n/a	n/a	-0.0374
C2(LH)	!A1&A2&!B1&!B2&!C1	0.0100	n/a	n/a	-0.0374
C2(LH)	!A1&A2&!B1&B2&!C1	0.0100	n/a	n/a	-0.0374
C2(LH)	!A1&A2&B1&!B2&!C1	0.0100	n/a	n/a	-0.0374
C2(LH)	A1&!A2&!B1&!B2&!C1	0.0100	n/a	n/a	-0.0374
C2(LH)	A1&!A2&!B1&B2&!C1	0.0100	n/a	n/a	-0.0374
C2(LH)	A1&!A2&B1&!B2&!C1	0.0100	n/a	n/a	-0.0374
C2(LH)	!A1&!A2&B1&B2&!C1	0.0100	n/a	n/a	-0.0372
C2(LH)	!A1&!A2&B1&B2&C1	0.0100	n/a	n/a	-0.0313
C2(LH)	!A1&A2&B1&B2&!C1	0.0100	n/a	n/a	-0.0372
C2(LH)	!A1&A2&B1&B2&C1	0.0100	n/a	n/a	-0.0313
C2(LH)	A1&!A2&B1&B2&!C1	0.0100	n/a	n/a	-0.0372
C2(LH)	A1&!A2&B1&B2&C1	0.0100	n/a	n/a	-0.0313
C2(LH)	A1&A2&!B1&!B2&!C1	0.0100	n/a	n/a	-0.0373
C2(LH)	A1&A2&!B1&!B2&C1	0.0100	n/a	n/a	-0.0296
C2(LH)	A1&A2&!B1&B2&!C1	0.0100	n/a	n/a	-0.0372
C2(LH)	A1&A2&!B1&B2&C1	0.0100	n/a	n/a	-0.0303
C2(LH)	A1&A2&B1&!B2&!C1	0.0100	n/a	n/a	-0.0372
C2(LH)	A1&A2&B1&!B2&C1	0.0100	n/a	n/a	-0.0303
C2(LH)	A1&A2&B1&B2&!C1	0.0100	n/a	n/a	-0.0372
C2(LH)	A1&A2&B1&B2&C1	0.0100	n/a	n/a	-0.0319
A2(LH)	!A1&!B1&!B2&!C1&!C2	0.0100	n/a	n/a	-0.0378
A2(LH)	!A1&!B1&!B2&!C1&C2	0.0100	n/a	n/a	-0.0378
A2(LH)	!A1&!B1&!B2&C1&!C2	0.0100	n/a	n/a	-0.0378
A2(LH)	!A1&!B1&B2&!C1&!C2	0.0100	n/a	n/a	-0.0378
A2(LH)	!A1&!B1&B2&!C1&C2	0.0100	n/a	n/a	-0.0378
A2(LH)	!A1&!B1&B2&C1&!C2	0.0100	n/a	n/a	-0.0378
A2(LH)	!A1&B1&!B2&!C1&!C2	0.0100	n/a	n/a	-0.0378
A2(LH)	!A1&B1&!B2&!C1&C2	0.0100	n/a	n/a	-0.0378
A2(LH)	!A1&B1&!B2&C1&!C2	0.0100	n/a	n/a	-0.0378
A2(LH)	!A1&!B1&!B2&C1&C2	0.0100	n/a	n/a	-0.0095
A2(LH)	!A1&!B1&B2&C1&C2	0.0100	n/a	n/a	-0.0095
A2(LH)	!A1&B1&!B2&C1&C2	0.0100	n/a	n/a	-0.0095
A2(LH)	!A1&B1&B2&!C1&!C2	0.0100	n/a	n/a	-0.0096
A2(LH)	!A1&B1&B2&!C1&C2	0.0100	n/a	n/a	-0.0096
A2(LH)	!A1&B1&B2&C1&!C2	0.0100	n/a	n/a	-0.0096
A2(LH)	!A1&B1&B2&C1&C2	0.0100	n/a	n/a	-0.0096
A2(LH)	A1&!B1&!B2&C1&C2	0.0100	n/a	n/a	-0.0098
A2(LH)	A1&!B1&B2&C1&C2	0.0100	n/a	n/a	-0.0098
A2(LH)	A1&B1&!B2&C1&C2	0.0100	n/a	n/a	-0.0098
A2(LH)	A1&B1&B2&!C1&!C2	0.0100	n/a	n/a	-0.0098
A2(LH)	A1&B1&B2&!C1&C2	0.0100	n/a	n/a	-0.0098
A2(LH)	A1&B1&B2&C1&!C2	0.0100	n/a	n/a	-0.0098
A2(LH)	A1&B1&B2&C1&C2	0.0100	n/a	n/a	-0.0098
A1(LH)	!A2&!B1&!B2&!C1&!C2	0.0100	n/a	n/a	-0.0259
A1(LH)	!A2&!B1&!B2&!C1&C2	0.0100	n/a	n/a	-0.0259
A1(LH)	!A2&!B1&!B2&C1&!C2	0.0100	n/a	n/a	-0.0259
A1(LH)	!A2&!B1&B2&!C1&!C2	0.0100	n/a	n/a	-0.0259
A1(LH)	!A2&!B1&B2&!C1&C2	0.0100	n/a	n/a	-0.0259
A1(LH)	!A2&!B1&B2&C1&!C2	0.0100	n/a	n/a	-0.0259
A1(LH)	!A2&B1&!B2&!C1&!C2	0.0100	n/a	n/a	-0.0259
A1(LH)	!A2&B1&!B2&!C1&C2	0.0100	n/a	n/a	-0.0259

continues on next page

Table 26 – continued from previous page

A1(LH)	!A2&B1&!B2&C1&!C2	0.0100	n/a	n/a	-0.0259
A1(LH)	!A2&!B1&!B2&C1&C2	0.0100	n/a	n/a	-0.0095
A1(LH)	!A2&!B1&B2&C1&C2	0.0100	n/a	n/a	-0.0094
A1(LH)	!A2&B1&!B2&C1&C2	0.0100	n/a	n/a	-0.0094
A1(LH)	!A2&B1&B2&!C1&!C2	0.0100	n/a	n/a	-0.0096
A1(LH)	!A2&B1&B2&!C1&C2	0.0100	n/a	n/a	-0.0096
A1(LH)	!A2&B1&B2&C1&!C2	0.0100	n/a	n/a	-0.0096
A1(LH)	!A2&B1&B2&C1&C2	0.0100	n/a	n/a	-0.0096
A1(LH)	A2&!B1&!B2&C1&C2	0.0100	n/a	n/a	-0.0097
A1(LH)	A2&!B1&B2&C1&C2	0.0100	n/a	n/a	-0.0098
A1(LH)	A2&B1&!B2&C1&C2	0.0100	n/a	n/a	-0.0098
A1(LH)	A2&B1&B2&!C1&!C2	0.0100	n/a	n/a	-0.0098
A1(LH)	A2&B1&B2&!C1&C2	0.0100	n/a	n/a	-0.0098
A1(LH)	A2&B1&B2&C1&!C2	0.0100	n/a	n/a	-0.0098
A1(LH)	A2&B1&B2&C1&C2	0.0100	n/a	n/a	-0.0098
C1(LH)	!A1&!A2&!B1&!B2&!C2	0.0100	n/a	n/a	-0.0284
C1(LH)	!A1&!A2&!B1&B2&!C2	0.0100	n/a	n/a	-0.0284
C1(LH)	!A1&!A2&B1&!B2&!C2	0.0100	n/a	n/a	-0.0284
C1(LH)	!A1&A2&!B1&!B2&!C2	0.0100	n/a	n/a	-0.0284
C1(LH)	!A1&A2&!B1&B2&!C2	0.0100	n/a	n/a	-0.0284
C1(LH)	!A1&A2&B1&!B2&!C2	0.0100	n/a	n/a	-0.0284
C1(LH)	A1&!A2&!B1&!B2&!C2	0.0100	n/a	n/a	-0.0284
C1(LH)	A1&!A2&!B1&B2&!C2	0.0100	n/a	n/a	-0.0284
C1(LH)	A1&!A2&B1&!B2&!C2	0.0100	n/a	n/a	-0.0284
C1(LH)	!A1&!A2&B1&B2&!C2	0.0100	n/a	n/a	-0.0372
C1(LH)	!A1&!A2&B1&B2&C2	0.0100	n/a	n/a	-0.0313
C1(LH)	!A1&A2&B1&B2&!C2	0.0100	n/a	n/a	-0.0372
C1(LH)	!A1&A2&B1&B2&C2	0.0100	n/a	n/a	-0.0313
C1(LH)	A1&!A2&B1&B2&!C2	0.0100	n/a	n/a	-0.0372
C1(LH)	A1&!A2&B1&B2&C2	0.0100	n/a	n/a	-0.0313
C1(LH)	A1&A2&!B1&!B2&!C2	0.0100	n/a	n/a	-0.0373
C1(LH)	A1&A2&!B1&!B2&C2	0.0100	n/a	n/a	-0.0296
C1(LH)	A1&A2&!B1&B2&!C2	0.0100	n/a	n/a	-0.0372
C1(LH)	A1&A2&!B1&B2&C2	0.0100	n/a	n/a	-0.0303
C1(LH)	A1&A2&B1&!B2&!C2	0.0100	n/a	n/a	-0.0372
C1(LH)	A1&A2&B1&!B2&C2	0.0100	n/a	n/a	-0.0303
C1(LH)	A1&A2&B1&B2&!C2	0.0100	n/a	n/a	-0.0372
C1(LH)	A1&A2&B1&B2&C2	0.0100	n/a	n/a	-0.0319
A2(HL)	!A1&!B1&!B2&!C1&!C2	0.0100	n/a	n/a	0.0418
A2(HL)	!A1&!B1&!B2&!C1&C2	0.0100	n/a	n/a	0.0418
A2(HL)	!A1&!B1&!B2&C1&!C2	0.0100	n/a	n/a	0.0418
A2(HL)	!A1&!B1&B2&!C1&!C2	0.0100	n/a	n/a	0.0418
A2(HL)	!A1&!B1&B2&!C1&C2	0.0100	n/a	n/a	0.0418
A2(HL)	!A1&!B1&B2&C1&!C2	0.0100	n/a	n/a	0.0418
A2(HL)	!A1&B1&!B2&!C1&!C2	0.0100	n/a	n/a	0.0418
A2(HL)	!A1&B1&!B2&!C1&C2	0.0100	n/a	n/a	0.0418
A2(HL)	!A1&B1&!B2&C1&!C2	0.0100	n/a	n/a	0.0418
A2(HL)	!A1&!B1&!B2&C1&C2	0.0100	n/a	n/a	0.0097
A2(HL)	!A1&!B1&B2&C1&C2	0.0100	n/a	n/a	0.0097
A2(HL)	!A1&B1&!B2&C1&C2	0.0100	n/a	n/a	0.0097
A2(HL)	!A1&B1&B2&!C1&!C2	0.0100	n/a	n/a	0.0097
A2(HL)	!A1&B1&B2&!C1&C2	0.0100	n/a	n/a	0.0097

continues on next page

Table 26 – continued from previous page

A2(HL)	!A1&B1&B2&C1&!C2	0.0100	n/a	n/a	0.0097
A2(HL)	!A1&B1&B2&C1&C2	0.0100	n/a	n/a	0.0097
A2(HL)	A1&!B1&!B2&C1&C2	0.0100	n/a	n/a	0.1006
A2(HL)	A1&!B1&B2&C1&C2	0.0100	n/a	n/a	0.0947
A2(HL)	A1&B1&!B2&C1&C2	0.0100	n/a	n/a	0.0947
A2(HL)	A1&B1&B2&!C1&!C2	0.0100	n/a	n/a	0.0545
A2(HL)	A1&B1&B2&!C1&C2	0.0100	n/a	n/a	0.0545
A2(HL)	A1&B1&B2&C1&!C2	0.0100	n/a	n/a	0.0545
A2(HL)	A1&B1&B2&C1&C2	0.0100	n/a	n/a	0.0545
B1(HL)	!A1&!A2&!B2&!C1&!C2	0.0100	n/a	n/a	0.0422
B1(HL)	!A1&!A2&!B2&!C1&C2	0.0100	n/a	n/a	0.0422
B1(HL)	!A1&!A2&!B2&C1&!C2	0.0100	n/a	n/a	0.0422
B1(HL)	!A1&A2&!B2&!C1&!C2	0.0100	n/a	n/a	0.0422
B1(HL)	!A1&A2&!B2&!C1&C2	0.0100	n/a	n/a	0.0422
B1(HL)	!A1&A2&!B2&C1&!C2	0.0100	n/a	n/a	0.0422
B1(HL)	A1&!A2&!B2&!C1&!C2	0.0100	n/a	n/a	0.0423
B1(HL)	A1&!A2&!B2&!C1&C2	0.0100	n/a	n/a	0.0422
B1(HL)	A1&!A2&!B2&C1&!C2	0.0100	n/a	n/a	0.0422
B1(HL)	!A1&!A2&!B2&C1&C2	0.0100	n/a	n/a	0.0119
B1(HL)	!A1&!A2&B2&C1&C2	0.0100	n/a	n/a	0.0395
B1(HL)	!A1&A2&!B2&C1&C2	0.0100	n/a	n/a	0.0119
B1(HL)	!A1&A2&B2&C1&C2	0.0100	n/a	n/a	0.0394
B1(HL)	A1&!A2&!B2&C1&C2	0.0100	n/a	n/a	0.0119
B1(HL)	A1&!A2&B2&C1&C2	0.0100	n/a	n/a	0.0394
B1(HL)	A1&A2&!B2&!C1&!C2	0.0100	n/a	n/a	0.0376
B1(HL)	A1&A2&!B2&!C1&C2	0.0100	n/a	n/a	0.0375
B1(HL)	A1&A2&!B2&C1&!C2	0.0100	n/a	n/a	0.0375
B1(HL)	A1&A2&!B2&C1&C2	0.0100	n/a	n/a	0.0200
B1(HL)	A1&A2&B2&!C1&!C2	0.0100	n/a	n/a	0.0375
B1(HL)	A1&A2&B2&!C1&C2	0.0100	n/a	n/a	0.0375
B1(HL)	A1&A2&B2&C1&!C2	0.0100	n/a	n/a	0.0375
B1(HL)	A1&A2&B2&C1&C2	0.0100	n/a	n/a	0.0212
C1(HL)	!A1&!A2&!B1&!B2&!C2	0.0100	n/a	n/a	0.0421
C1(HL)	!A1&!A2&!B1&B2&!C2	0.0100	n/a	n/a	0.0421
C1(HL)	!A1&!A2&B1&!B2&!C2	0.0100	n/a	n/a	0.0422
C1(HL)	!A1&A2&!B1&!B2&!C2	0.0100	n/a	n/a	0.0421
C1(HL)	!A1&A2&!B1&B2&!C2	0.0100	n/a	n/a	0.0421
C1(HL)	!A1&A2&B1&!B2&!C2	0.0100	n/a	n/a	0.0421
C1(HL)	A1&!A2&!B1&!B2&!C2	0.0100	n/a	n/a	0.0421
C1(HL)	A1&!A2&!B1&B2&!C2	0.0100	n/a	n/a	0.0421
C1(HL)	A1&!A2&B1&!B2&!C2	0.0100	n/a	n/a	0.0422
C1(HL)	!A1&!A2&B1&B2&!C2	0.0100	n/a	n/a	0.0375
C1(HL)	!A1&!A2&B1&B2&C2	0.0100	n/a	n/a	0.0374
C1(HL)	!A1&A2&B1&B2&!C2	0.0100	n/a	n/a	0.0375
C1(HL)	!A1&A2&B1&B2&C2	0.0100	n/a	n/a	0.0374
C1(HL)	A1&!A2&B1&B2&!C2	0.0100	n/a	n/a	0.0374
C1(HL)	A1&!A2&B1&B2&C2	0.0100	n/a	n/a	0.0374
C1(HL)	A1&A2&!B1&!B2&!C2	0.0100	n/a	n/a	0.0374
C1(HL)	A1&A2&!B1&!B2&C2	0.0100	n/a	n/a	0.0375
C1(HL)	A1&A2&!B1&B2&!C2	0.0100	n/a	n/a	0.0375
C1(HL)	A1&A2&!B1&B2&C2	0.0100	n/a	n/a	0.0374
C1(HL)	A1&A2&B1&!B2&!C2	0.0100	n/a	n/a	0.0375

continues on next page

Table 26 – continued from previous page

C1(HL)	A1&A2&B1&!B2&C2	0.0100	n/a	n/a	0.0374
C1(HL)	A1&A2&B1&B2&!C2	0.0100	n/a	n/a	0.0375
C1(HL)	A1&A2&B1&B2&C2	0.0100	n/a	n/a	0.0374
A1(HL)	!A2&!B1&!B2&!C1&!C2	0.0100	n/a	n/a	0.0423
A1(HL)	!A2&!B1&!B2&!C1&C2	0.0100	n/a	n/a	0.0422
A1(HL)	!A2&!B1&!B2&C1&!C2	0.0100	n/a	n/a	0.0422
A1(HL)	!A2&!B1&B2&!C1&!C2	0.0100	n/a	n/a	0.0422
A1(HL)	!A2&!B1&B2&!C1&C2	0.0100	n/a	n/a	0.0422
A1(HL)	!A2&!B1&B2&C1&!C2	0.0100	n/a	n/a	0.0422
A1(HL)	!A2&B1&!B2&!C1&!C2	0.0100	n/a	n/a	0.0423
A1(HL)	!A2&B1&!B2&!C1&C2	0.0100	n/a	n/a	0.0422
A1(HL)	!A2&B1&!B2&C1&!C2	0.0100	n/a	n/a	0.0422
A1(HL)	!A2&!B1&!B2&C1&C2	0.0100	n/a	n/a	0.0097
A1(HL)	!A2&!B1&B2&C1&C2	0.0100	n/a	n/a	0.0097
A1(HL)	!A2&B1&!B2&C1&C2	0.0100	n/a	n/a	0.0097
A1(HL)	!A2&B1&B2&!C1&!C2	0.0100	n/a	n/a	0.0097
A1(HL)	!A2&B1&B2&!C1&C2	0.0100	n/a	n/a	0.0097
A1(HL)	!A2&B1&B2&C1&!C2	0.0100	n/a	n/a	0.0097
A1(HL)	!A2&B1&B2&C1&C2	0.0100	n/a	n/a	0.0097
A1(HL)	A2&!B1&!B2&C1&C2	0.0100	n/a	n/a	0.1006
A1(HL)	A2&!B1&B2&C1&C2	0.0100	n/a	n/a	0.0947
A1(HL)	A2&B1&!B2&C1&C2	0.0100	n/a	n/a	0.0947
A1(HL)	A2&B1&B2&!C1&!C2	0.0100	n/a	n/a	0.0545
A1(HL)	A2&B1&B2&!C1&C2	0.0100	n/a	n/a	0.0545
A1(HL)	A2&B1&B2&C1&!C2	0.0100	n/a	n/a	0.0545
A1(HL)	A2&B1&B2&C1&C2	0.0100	n/a	n/a	0.0545
B1(LH)	!A1&!A2&!B2&!C1&!C2	0.0100	n/a	n/a	-0.0205
B1(LH)	!A1&!A2&!B2&!C1&C2	0.0100	n/a	n/a	-0.0205
B1(LH)	!A1&!A2&!B2&C1&!C2	0.0100	n/a	n/a	-0.0206
B1(LH)	!A1&A2&!B2&!C1&!C2	0.0100	n/a	n/a	-0.0205
B1(LH)	!A1&A2&!B2&!C1&C2	0.0100	n/a	n/a	-0.0205
B1(LH)	!A1&A2&!B2&C1&!C2	0.0100	n/a	n/a	-0.0205
B1(LH)	A1&!A2&!B2&!C1&!C2	0.0100	n/a	n/a	-0.0205
B1(LH)	A1&!A2&!B2&!C1&C2	0.0100	n/a	n/a	-0.0205
B1(LH)	A1&!A2&!B2&C1&!C2	0.0100	n/a	n/a	-0.0205
B1(LH)	!A1&!A2&!B2&C1&C2	0.0100	n/a	n/a	-0.0112
B1(LH)	!A1&!A2&B2&C1&C2	0.0100	n/a	n/a	-0.0115
B1(LH)	!A1&A2&!B2&C1&C2	0.0100	n/a	n/a	-0.0113
B1(LH)	!A1&A2&B2&C1&C2	0.0100	n/a	n/a	-0.0115
B1(LH)	A1&!A2&!B2&C1&C2	0.0100	n/a	n/a	-0.0113
B1(LH)	A1&!A2&B2&C1&C2	0.0100	n/a	n/a	-0.0115
B1(LH)	A1&A2&!B2&!C1&!C2	0.0100	n/a	n/a	-0.0374
B1(LH)	A1&A2&!B2&!C1&C2	0.0100	n/a	n/a	-0.0374
B1(LH)	A1&A2&!B2&C1&!C2	0.0100	n/a	n/a	-0.0374
B1(LH)	A1&A2&!B2&C1&C2	0.0100	n/a	n/a	-0.0213
B1(LH)	A1&A2&B2&!C1&!C2	0.0100	n/a	n/a	-0.0297
B1(LH)	A1&A2&B2&!C1&C2	0.0100	n/a	n/a	-0.0295
B1(LH)	A1&A2&B2&C1&!C2	0.0100	n/a	n/a	-0.0294
B1(LH)	A1&A2&B2&C1&C2	0.0100	n/a	n/a	-0.0223

LEAKAGE POWER

When Condition	Power (nW)
!A1&!A2&!B1&!B2&!C1&!C2	0.1257
!A1&!A2&!B1&!B2&!C1&C2	0.1259
!A1&!A2&!B1&!B2&C1&!C2	0.1658
!A1&!A2&!B1&B2&!C1&!C2	0.1259
!A1&!A2&!B1&B2&!C1&C2	0.1261
!A1&!A2&!B1&B2&C1&!C2	0.1660
!A1&!A2&B1&!B2&!C1&!C2	0.1658
!A1&!A2&B1&!B2&!C1&C2	0.1660
!A1&!A2&B1&!B2&C1&!C2	0.2059
!A1&A2&!B1&!B2&!C1&!C2	0.1259
!A1&A2&!B1&!B2&!C1&C2	0.1261
!A1&A2&!B1&!B2&C1&!C2	0.1660
!A1&A2&!B1&B2&!C1&!C2	0.1261
!A1&A2&!B1&B2&!C1&C2	0.1263
!A1&A2&!B1&B2&C1&!C2	0.1663
!A1&A2&B1&!B2&!C1&!C2	0.1660
!A1&A2&B1&!B2&!C1&C2	0.1663
!A1&A2&B1&!B2&C1&!C2	0.2062
A1&!A2&!B1&!B2&!C1&!C2	0.1658
A1&!A2&!B1&!B2&!C1&C2	0.1660
A1&!A2&!B1&!B2&C1&!C2	0.2059
A1&!A2&!B1&B2&!C1&!C2	0.1660
A1&!A2&!B1&B2&!C1&C2	0.1663
A1&!A2&!B1&B2&C1&!C2	0.2062
A1&!A2&B1&!B2&!C1&!C2	0.2059
A1&!A2&B1&!B2&!C1&C2	0.2062
A1&!A2&B1&!B2&C1&!C2	0.2461
!A1&!A2&!B1&!B2&C1&C2	0.2449
!A1&!A2&!B1&B2&C1&C2	0.2467
!A1&!A2&B1&!B2&C1&C2	0.2467
!A1&!A2&B1&B2&!C1&!C2	0.1742
!A1&!A2&B1&B2&!C1&C2	0.1742
!A1&!A2&B1&B2&C1&!C2	0.1742
!A1&!A2&B1&B2&C1&C2	0.1742
!A1&A2&!B1&!B2&C1&C2	0.2469
!A1&A2&!B1&B2&C1&C2	0.2487
!A1&A2&B1&!B2&C1&C2	0.2487
!A1&A2&B1&B2&!C1&!C2	0.1763
!A1&A2&B1&B2&!C1&C2	0.1763
!A1&A2&B1&B2&C1&!C2	0.1763
!A1&A2&B1&B2&C1&C2	0.1764
A1&!A2&!B1&!B2&C1&C2	0.2469
A1&!A2&!B1&B2&C1&C2	0.2487
A1&!A2&B1&!B2&C1&C2	0.2487
A1&!A2&B1&B2&!C1&!C2	0.1763
A1&!A2&B1&B2&!C1&C2	0.1763
A1&!A2&B1&B2&C1&!C2	0.1763
A1&!A2&B1&B2&C1&C2	0.1764

continues on next page

Table 27 – continued from previous page

A1&A2&!B1&!B2&!C1&!C2	0.1029
A1&A2&!B1&!B2&!C1&C2	0.1029
A1&A2&!B1&!B2&C1&!C2	0.1029
A1&A2&!B1&!B2&C1&C2	0.1029
A1&A2&!B1&B2&!C1&!C2	0.1029
A1&A2&!B1&B2&!C1&C2	0.1029
A1&A2&!B1&B2&C1&!C2	0.1029
A1&A2&!B1&B2&C1&C2	0.1029
A1&A2&B1&!B2&!C1&!C2	0.1029
A1&A2&B1&!B2&!C1&C2	0.1029
A1&A2&B1&!B2&C1&!C2	0.1029
A1&A2&B1&!B2&C1&C2	0.1029
A1&A2&B1&B2&!C1&!C2	0.1029
A1&A2&B1&B2&!C1&C2	0.1029
A1&A2&B1&B2&C1&!C2	0.1029
A1&A2&B1&B2&C1&C2	0.1029

gf180mcu_fd_sc_mcu7t5v0__aoi222_2

gf180mcu_fd_sc_mcu7t5v0__aoi222_2 symbol

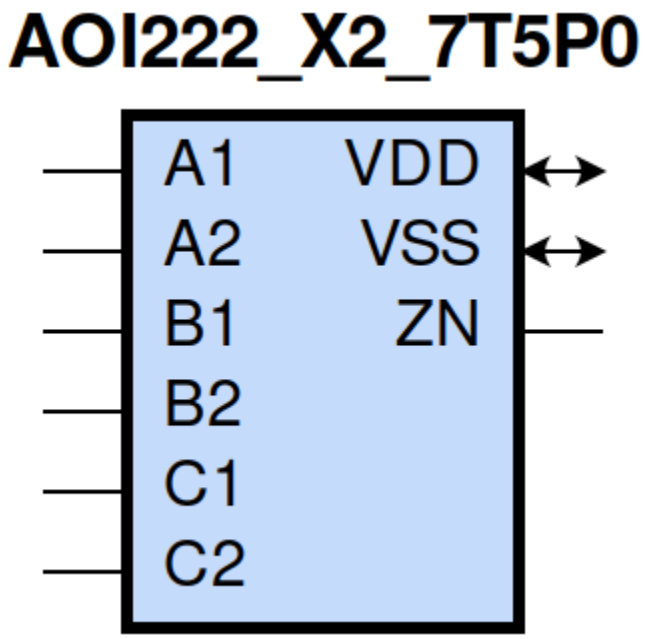

gf180mcu_fd_sc_mcu7t5v0__aoi222_2 schematic

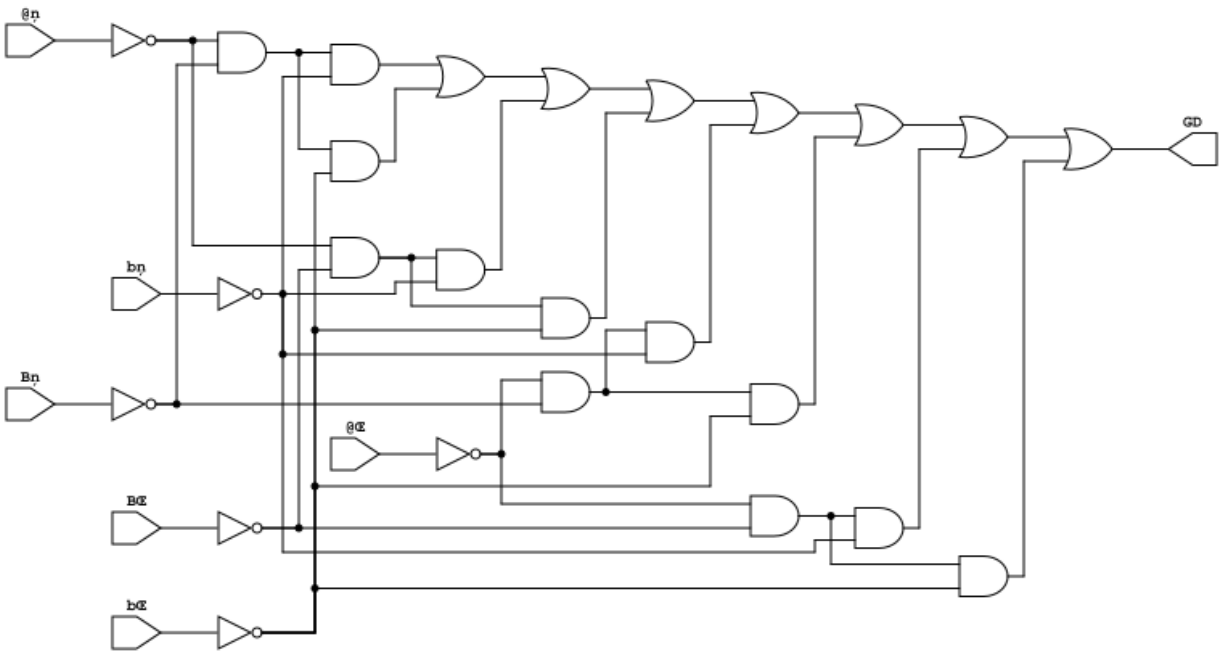

gf180mcu_fd_sc_mcu7t5v0__aoi222_2 layout

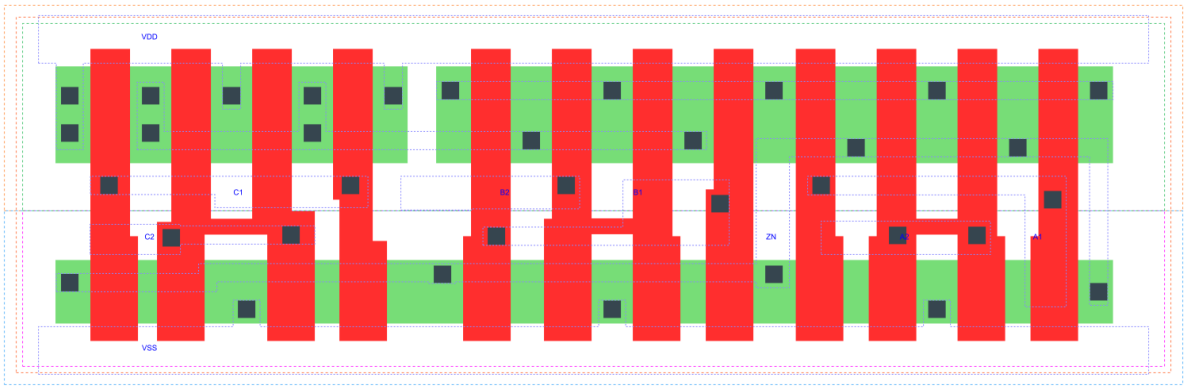

AOI222_X2 is a three 2-input AND into 3-input NOR, NOR[AND(A1,A2),AND(B1,B2),AND(C1,C2)], 2X drive strength

Attributes

Attribute	Value
area	54.880000 μm^2

OUTPUT FUNCTIONS

Output Pin	Function
ZN	(((!A1)&(!B1)&(!C1))|((!A1)&(!B1)&(!C2))|((!A1)&(!B2)&(!C1))|((!A1)&(!B2)&(!C2))|((!A2)&(!B1)&(!C1))|((!A2)&(!B

TRUTH TABLE FOR ZN

A1	A2	B1	B2	C1	C2	ZN
0	?	0	?	0	?	1
0	?	0	?	?	0	1
0	?	?	0	0	?	1
0	?	?	0	?	0	1
?	0	0	?	0	?	1
?	0	0	?	?	0	1
?	0	?	0	0	?	1
?	0	?	0	?	0	1
1	1	?	?	?	?	0
?	?	1	1	?	?	0
?	?	?	?	1	1	0

FUNCTIONAL SCHEMATIC

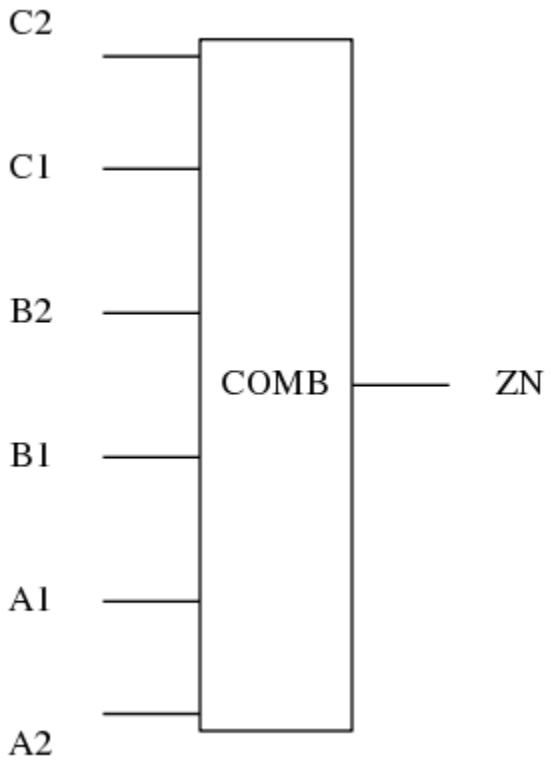

PIN CAPACITANCE (pf)

Pin	Type	Capacitance (pf)
C2	input	0.0092
C1	input	0.0095
B2	input	0.0090
B1	input	0.0096
A1	input	0.0101
A2	input	0.0091

DELAY AND OUTPUT TRANSITION TIME corresponding to min slew and load

Input Pin	Output	When Condition	Tin (ns)	Out Load (pf)	Delay (ns)	Tout (ns)
C2(LH)	ZN(HL)	!A1&!A2&!B1&!B2&C1	0.0100	0.0010	0.1784	0.1214
C2(LH)	ZN(HL)	!A1&!A2&!B1&B2&C1	0.0100	0.0010	0.1674	0.1135
C2(LH)	ZN(HL)	!A1&!A2&B1&!B2&C1	0.0100	0.0010	0.1804	0.1358
C2(LH)	ZN(HL)	!A1&A2&!B1&!B2&C1	0.0100	0.0010	0.1366	0.1049
C2(LH)	ZN(HL)	!A1&A2&!B1&B2&C1	0.0100	0.0010	0.1312	0.0986

continues on next page

Table 28 – continued from previous page

C2(LH)	ZN(HL)	!A1&A2&B1&!B2&C1	0.0100	0.0010	0.1448	0.1222
C2(LH)	ZN(HL)	A1&!A2&!B1&!B2&C1	0.0100	0.0010	0.1508	0.1290
C2(LH)	ZN(HL)	A1&!A2&!B1&B2&C1	0.0100	0.0010	0.1445	0.1217
C2(LH)	ZN(HL)	A1&!A2&B1&!B2&C1	0.0100	0.0010	0.1585	0.1444
C2(HL)	ZN(LH)	!A1&!A2&!B1&!B2&C1	0.0100	0.0010	0.2802	0.1724
C2(HL)	ZN(LH)	!A1&!A2&!B1&B2&C1	0.0100	0.0010	0.3247	0.2125
C2(HL)	ZN(LH)	!A1&!A2&B1&!B2&C1	0.0100	0.0010	0.3715	0.2482
C2(HL)	ZN(LH)	!A1&A2&!B1&!B2&C1	0.0100	0.0010	0.3266	0.1780
C2(HL)	ZN(LH)	!A1&A2&!B1&B2&C1	0.0100	0.0010	0.3662	0.2123
C2(HL)	ZN(LH)	!A1&A2&B1&!B2&C1	0.0100	0.0010	0.4218	0.2548
C2(HL)	ZN(LH)	A1&!A2&!B1&!B2&C1	0.0100	0.0010	0.3728	0.2123
C2(HL)	ZN(LH)	A1&!A2&!B1&B2&C1	0.0100	0.0010	0.4206	0.2539
C2(HL)	ZN(LH)	A1&!A2&B1&!B2&C1	0.0100	0.0010	0.4757	0.2968
C1(LH)	ZN(HL)	!A1&!A2&!B1&!B2&C2	0.0100	0.0010	0.1672	0.1215
C1(LH)	ZN(HL)	!A1&!A2&!B1&B2&C2	0.0100	0.0010	0.1562	0.1140
C1(LH)	ZN(HL)	!A1&!A2&B1&!B2&C2	0.0100	0.0010	0.1693	0.1359
C1(LH)	ZN(HL)	!A1&A2&!B1&!B2&C2	0.0100	0.0010	0.1253	0.1053
C1(LH)	ZN(HL)	!A1&A2&!B1&B2&C2	0.0100	0.0010	0.1198	0.0990
C1(LH)	ZN(HL)	!A1&A2&B1&!B2&C2	0.0100	0.0010	0.1334	0.1229
C1(LH)	ZN(HL)	A1&!A2&!B1&!B2&C2	0.0100	0.0010	0.1395	0.1292
C1(LH)	ZN(HL)	A1&!A2&!B1&B2&C2	0.0100	0.0010	0.1331	0.1224
C1(LH)	ZN(HL)	A1&!A2&B1&!B2&C2	0.0100	0.0010	0.1471	0.1450
C1(HL)	ZN(LH)	!A1&!A2&!B1&!B2&C2	0.0100	0.0010	0.2501	0.1450
C1(HL)	ZN(LH)	!A1&!A2&!B1&B2&C2	0.0100	0.0010	0.2882	0.1785
C1(HL)	ZN(LH)	!A1&!A2&B1&!B2&C2	0.0100	0.0010	0.3360	0.2138
C1(HL)	ZN(LH)	!A1&A2&!B1&!B2&C2	0.0100	0.0010	0.2895	0.1444
C1(HL)	ZN(LH)	!A1&A2&!B1&B2&C2	0.0100	0.0010	0.3228	0.1711
C1(HL)	ZN(LH)	!A1&A2&B1&!B2&C2	0.0100	0.0010	0.3796	0.2134
C1(HL)	ZN(LH)	A1&!A2&!B1&!B2&C2	0.0100	0.0010	0.3374	0.1779
C1(HL)	ZN(LH)	A1&!A2&!B1&B2&C2	0.0100	0.0010	0.3786	0.2126
C1(HL)	ZN(LH)	A1&!A2&B1&!B2&C2	0.0100	0.0010	0.4346	0.2551
B2(HL)	ZN(LH)	!A1&!A2&B1&!C1&!C2	0.0100	0.0010	0.2256	0.1625
B2(HL)	ZN(LH)	!A1&!A2&B1&!C1&C2	0.0100	0.0010	0.2723	0.2134
B2(HL)	ZN(LH)	!A1&!A2&B1&C1&!C2	0.0100	0.0010	0.3173	0.2480
B2(HL)	ZN(LH)	!A1&A2&B1&!C1&!C2	0.0100	0.0010	0.2662	0.1715
B2(HL)	ZN(LH)	!A1&A2&B1&!C1&C2	0.0100	0.0010	0.3143	0.2136
B2(HL)	ZN(LH)	!A1&A2&B1&C1&!C2	0.0100	0.0010	0.3675	0.2545
B2(HL)	ZN(LH)	A1&!A2&B1&!C1&!C2	0.0100	0.0010	0.3117	0.2061
B2(HL)	ZN(LH)	A1&!A2&B1&!C1&C2	0.0100	0.0010	0.3684	0.2552
B2(HL)	ZN(LH)	A1&!A2&B1&C1&!C2	0.0100	0.0010	0.4214	0.2966
B2(LH)	ZN(HL)	!A1&!A2&B1&!C1&!C2	0.0100	0.0010	0.1468	0.0888
B2(LH)	ZN(HL)	!A1&!A2&B1&!C1&C2	0.0100	0.0010	0.1471	0.0888
B2(LH)	ZN(HL)	!A1&!A2&B1&C1&!C2	0.0100	0.0010	0.1570	0.1073
B2(LH)	ZN(HL)	!A1&A2&B1&!C1&!C2	0.0100	0.0010	0.1242	0.0792
B2(LH)	ZN(HL)	!A1&A2&B1&!C1&C2	0.0100	0.0010	0.1245	0.0790
B2(LH)	ZN(HL)	!A1&A2&B1&C1&!C2	0.0100	0.0010	0.1345	0.0983
B2(LH)	ZN(HL)	A1&!A2&B1&!C1&!C2	0.0100	0.0010	0.1343	0.0987
B2(LH)	ZN(HL)	A1&!A2&B1&!C1&C2	0.0100	0.0010	0.1346	0.0987
B2(LH)	ZN(HL)	A1&!A2&B1&C1&!C2	0.0100	0.0010	0.1458	0.1173
B1(LH)	ZN(HL)	!A1&!A2&B2&!C1&!C2	0.0100	0.0010	0.1350	0.0888
B1(LH)	ZN(HL)	!A1&!A2&B2&!C1&C2	0.0100	0.0010	0.1351	0.0893
B1(LH)	ZN(HL)	!A1&!A2&B2&C1&!C2	0.0100	0.0010	0.1451	0.1074

continues on next page

Table 28 – continued from previous page

B1(LH)	ZN(HL)	!A1&A2&B2&!C1&!C2	0.0100	0.0010	0.1122	0.0796
B1(LH)	ZN(HL)	!A1&A2&B2&!C1&C2	0.0100	0.0010	0.1125	0.0793
B1(LH)	ZN(HL)	!A1&A2&B2&C1&!C2	0.0100	0.0010	0.1226	0.0986
B1(LH)	ZN(HL)	A1&!A2&B2&!C1&!C2	0.0100	0.0010	0.1224	0.0990
B1(LH)	ZN(HL)	A1&!A2&B2&!C1&C2	0.0100	0.0010	0.1227	0.0988
B1(LH)	ZN(HL)	A1&!A2&B2&C1&!C2	0.0100	0.0010	0.1339	0.1175
B1(HL)	ZN(LH)	!A1&!A2&B2&!C1&!C2	0.0100	0.0010	0.1949	0.1337
B1(HL)	ZN(LH)	!A1&!A2&B2&!C1&C2	0.0100	0.0010	0.2339	0.1775
B1(HL)	ZN(LH)	!A1&!A2&B2&C1&!C2	0.0100	0.0010	0.2799	0.2118
B1(HL)	ZN(LH)	!A1&A2&B2&!C1&!C2	0.0100	0.0010	0.2285	0.1357
B1(HL)	ZN(LH)	!A1&A2&B2&!C1&C2	0.0100	0.0010	0.2688	0.1704
B1(HL)	ZN(LH)	!A1&A2&B2&C1&!C2	0.0100	0.0010	0.3232	0.2114
B1(HL)	ZN(LH)	A1&!A2&B2&!C1&!C2	0.0100	0.0010	0.2744	0.1705
B1(HL)	ZN(LH)	A1&!A2&B2&!C1&C2	0.0100	0.0010	0.3243	0.2123
B1(HL)	ZN(LH)	A1&!A2&B2&C1&!C2	0.0100	0.0010	0.3784	0.2534
A1(HL)	ZN(LH)	A2&!B1&!B2&!C1&!C2	0.0100	0.0010	0.1159	0.0988
A1(HL)	ZN(LH)	A2&!B1&!B2&!C1&C2	0.0100	0.0010	0.1242	0.1209
A1(HL)	ZN(LH)	A2&!B1&!B2&C1&!C2	0.0100	0.0010	0.1657	0.1612
A1(HL)	ZN(LH)	A2&!B1&B2&!C1&!C2	0.0100	0.0010	0.1377	0.1282
A1(HL)	ZN(LH)	A2&!B1&B2&!C1&C2	0.0100	0.0010	0.1471	0.1538
A1(HL)	ZN(LH)	A2&!B1&B2&C1&!C2	0.0100	0.0010	0.1986	0.2014
A1(HL)	ZN(LH)	A2&B1&!B2&!C1&!C2	0.0100	0.0010	0.1836	0.1668
A1(HL)	ZN(LH)	A2&B1&!B2&!C1&C2	0.0100	0.0010	0.2007	0.2030
A1(HL)	ZN(LH)	A2&B1&!B2&C1&!C2	0.0100	0.0010	0.2538	0.2483
A1(LH)	ZN(HL)	A2&!B1&!B2&!C1&!C2	0.0100	0.0010	0.0762	0.0484
A1(LH)	ZN(HL)	A2&!B1&!B2&!C1&C2	0.0100	0.0010	0.0762	0.0484
A1(LH)	ZN(HL)	A2&!B1&!B2&C1&!C2	0.0100	0.0010	0.0818	0.0644
A1(LH)	ZN(HL)	A2&!B1&B2&!C1&!C2	0.0100	0.0010	0.0764	0.0484
A1(LH)	ZN(HL)	A2&!B1&B2&!C1&C2	0.0100	0.0010	0.0764	0.0484
A1(LH)	ZN(HL)	A2&!B1&B2&C1&!C2	0.0100	0.0010	0.0821	0.0644
A1(LH)	ZN(HL)	A2&B1&!B2&!C1&!C2	0.0100	0.0010	0.0820	0.0652
A1(LH)	ZN(HL)	A2&B1&!B2&!C1&C2	0.0100	0.0010	0.0821	0.0652
A1(LH)	ZN(HL)	A2&B1&!B2&C1&!C2	0.0100	0.0010	0.0899	0.0817
A2(HL)	ZN(LH)	A1&!B1&!B2&!C1&!C2	0.0100	0.0010	0.1442	0.1284
A2(HL)	ZN(LH)	A1&!B1&!B2&!C1&C2	0.0100	0.0010	0.1576	0.1603
A2(HL)	ZN(LH)	A1&!B1&!B2&C1&!C2	0.0100	0.0010	0.1999	0.1993
A2(HL)	ZN(LH)	A1&!B1&B2&!C1&!C2	0.0100	0.0010	0.1733	0.1654
A2(HL)	ZN(LH)	A1&!B1&B2&!C1&C2	0.0100	0.0010	0.1886	0.2006
A2(HL)	ZN(LH)	A1&!B1&B2&C1&!C2	0.0100	0.0010	0.2406	0.2464
A2(HL)	ZN(LH)	A1&B1&!B2&!C1&!C2	0.0100	0.0010	0.2192	0.2032
A2(HL)	ZN(LH)	A1&B1&!B2&!C1&C2	0.0100	0.0010	0.2424	0.2481
A2(HL)	ZN(LH)	A1&B1&!B2&C1&!C2	0.0100	0.0010	0.2950	0.2924
A2(LH)	ZN(HL)	A1&!B1&!B2&!C1&!C2	0.0100	0.0010	0.0876	0.0483
A2(LH)	ZN(HL)	A1&!B1&!B2&!C1&C2	0.0100	0.0010	0.0876	0.0483
A2(LH)	ZN(HL)	A1&!B1&!B2&C1&!C2	0.0100	0.0010	0.0933	0.0644
A2(LH)	ZN(HL)	A1&!B1&B2&!C1&!C2	0.0100	0.0010	0.0878	0.0483
A2(LH)	ZN(HL)	A1&!B1&B2&!C1&C2	0.0100	0.0010	0.0878	0.0483
A2(LH)	ZN(HL)	A1&!B1&B2&C1&!C2	0.0100	0.0010	0.0935	0.0644
A2(LH)	ZN(HL)	A1&B1&!B2&!C1&!C2	0.0100	0.0010	0.0935	0.0651
A2(LH)	ZN(HL)	A1&B1&!B2&!C1&C2	0.0100	0.0010	0.0935	0.0651
A2(LH)	ZN(HL)	A1&B1&!B2&C1&!C2	0.0100	0.0010	0.1014	0.0817

DYNAMIC ENERGY

Input Pin	When Condition	Tin (ns)	Output	Out Load (pf)	Energy (uW/MHz)
A1	A2&!B1&!B2&!C1&!C2	0.0100	ZN(LH)	0.0010	0.3369
A1	A2&!B1&!B2&!C1&C2	0.0100	ZN(LH)	0.0010	0.3373
A1	A2&!B1&!B2&C1&!C2	0.0100	ZN(LH)	0.0010	0.4177
A1	A2&!B1&B2&!C1&!C2	0.0100	ZN(LH)	0.0010	0.3368
A1	A2&!B1&B2&!C1&C2	0.0100	ZN(LH)	0.0010	0.3370
A1	A2&!B1&B2&C1&!C2	0.0100	ZN(LH)	0.0010	0.4175
A1	A2&B1&!B2&!C1&!C2	0.0100	ZN(LH)	0.0010	0.4207
A1	A2&B1&!B2&!C1&C2	0.0100	ZN(LH)	0.0010	0.4209
A1	A2&B1&!B2&C1&!C2	0.0100	ZN(LH)	0.0010	0.5009
B2	!A1&!A2&B1&!C1&!C2	0.0100	ZN(LH)	0.0010	0.5717
B2	!A1&!A2&B1&!C1&C2	0.0100	ZN(LH)	0.0010	0.5716
B2	!A1&!A2&B1&C1&!C2	0.0100	ZN(LH)	0.0010	0.6507
B2	!A1&A2&B1&!C1&!C2	0.0100	ZN(LH)	0.0010	0.5277
B2	!A1&A2&B1&!C1&C2	0.0100	ZN(LH)	0.0010	0.5276
B2	!A1&A2&B1&C1&!C2	0.0100	ZN(LH)	0.0010	0.6066
B2	A1&!A2&B1&!C1&!C2	0.0100	ZN(LH)	0.0010	0.6081
B2	A1&!A2&B1&!C1&C2	0.0100	ZN(LH)	0.0010	0.6081
B2	A1&!A2&B1&C1&!C2	0.0100	ZN(LH)	0.0010	0.6872
B1	!A1&!A2&B2&!C1&!C2	0.0100	ZN(HL)	0.0010	0.1195
B1	!A1&!A2&B2&!C1&C2	0.0100	ZN(HL)	0.0010	0.1203
B1	!A1&!A2&B2&C1&!C2	0.0100	ZN(HL)	0.0010	0.1205
B1	!A1&A2&B2&!C1&!C2	0.0100	ZN(HL)	0.0010	0.1063
B1	!A1&A2&B2&!C1&C2	0.0100	ZN(HL)	0.0010	0.1073
B1	!A1&A2&B2&C1&!C2	0.0100	ZN(HL)	0.0010	0.1075
B1	A1&!A2&B2&!C1&!C2	0.0100	ZN(HL)	0.0010	0.1066
B1	A1&!A2&B2&!C1&C2	0.0100	ZN(HL)	0.0010	0.1074
B1	A1&!A2&B2&C1&!C2	0.0100	ZN(HL)	0.0010	0.1074
A2	A1&!B1&!B2&!C1&!C2	0.0100	ZN(LH)	0.0010	0.4068
A2	A1&!B1&!B2&!C1&C2	0.0100	ZN(LH)	0.0010	0.4069
A2	A1&!B1&!B2&C1&!C2	0.0100	ZN(LH)	0.0010	0.4863
A2	A1&!B1&B2&!C1&!C2	0.0100	ZN(LH)	0.0010	0.4067
A2	A1&!B1&B2&!C1&C2	0.0100	ZN(LH)	0.0010	0.4069
A2	A1&!B1&B2&C1&!C2	0.0100	ZN(LH)	0.0010	0.4861
A2	A1&B1&!B2&!C1&!C2	0.0100	ZN(LH)	0.0010	0.4893
A2	A1&B1&!B2&!C1&C2	0.0100	ZN(LH)	0.0010	0.4894
A2	A1&B1&!B2&C1&!C2	0.0100	ZN(LH)	0.0010	0.5684
B1	!A1&!A2&B2&!C1&!C2	0.0100	ZN(LH)	0.0010	0.4995
B1	!A1&!A2&B2&!C1&C2	0.0100	ZN(LH)	0.0010	0.4995
B1	!A1&!A2&B2&C1&!C2	0.0100	ZN(LH)	0.0010	0.5802
B1	!A1&A2&B2&!C1&!C2	0.0100	ZN(LH)	0.0010	0.4554
B1	!A1&A2&B2&!C1&C2	0.0100	ZN(LH)	0.0010	0.4554
B1	!A1&A2&B2&C1&!C2	0.0100	ZN(LH)	0.0010	0.5360
B1	A1&!A2&B2&!C1&!C2	0.0100	ZN(LH)	0.0010	0.5376
B1	A1&!A2&B2&!C1&C2	0.0100	ZN(LH)	0.0010	0.5376
B1	A1&!A2&B2&C1&!C2	0.0100	ZN(LH)	0.0010	0.6176
C1	!A1&!A2&!B1&!B2&C2	0.0100	ZN(HL)	0.0010	0.2137
C1	!A1&!A2&!B1&B2&C2	0.0100	ZN(HL)	0.0010	0.2007

continues on next page

Table 29 – continued from previous page

C1	!A1&!A2&B1&!B2&C2	0.0100	ZN(HL)	0.0010	0.2007
C1	!A1&A2&!B1&!B2&C2	0.0100	ZN(HL)	0.0010	0.2009
C1	!A1&A2&!B1&B2&C2	0.0100	ZN(HL)	0.0010	0.1881
C1	!A1&A2&B1&!B2&C2	0.0100	ZN(HL)	0.0010	0.1882
C1	A1&!A2&!B1&!B2&C2	0.0100	ZN(HL)	0.0010	0.2010
C1	A1&!A2&!B1&B2&C2	0.0100	ZN(HL)	0.0010	0.1882
C1	A1&!A2&B1&!B2&C2	0.0100	ZN(HL)	0.0010	0.1881
A2	A1&!B1&!B2&!C1&!C2	0.0100	ZN(HL)	0.0010	0.0077
A2	A1&!B1&!B2&!C1&C2	0.0100	ZN(HL)	0.0010	0.0077
A2	A1&!B1&!B2&C1&!C2	0.0100	ZN(HL)	0.0010	0.0078
A2	A1&!B1&B2&!C1&!C2	0.0100	ZN(HL)	0.0010	0.0083
A2	A1&!B1&B2&!C1&C2	0.0100	ZN(HL)	0.0010	0.0083
A2	A1&!B1&B2&C1&!C2	0.0100	ZN(HL)	0.0010	0.0083
A2	A1&B1&!B2&!C1&!C2	0.0100	ZN(HL)	0.0010	0.0083
A2	A1&B1&!B2&!C1&C2	0.0100	ZN(HL)	0.0010	0.0083
A2	A1&B1&!B2&C1&!C2	0.0100	ZN(HL)	0.0010	0.0084
C2	!A1&!A2&!B1&!B2&C1	0.0100	ZN(HL)	0.0010	0.2135
C2	!A1&!A2&!B1&B2&C1	0.0100	ZN(HL)	0.0010	0.2006
C2	!A1&!A2&B1&!B2&C1	0.0100	ZN(HL)	0.0010	0.2007
C2	!A1&A2&!B1&!B2&C1	0.0100	ZN(HL)	0.0010	0.2008
C2	!A1&A2&!B1&B2&C1	0.0100	ZN(HL)	0.0010	0.1879
C2	!A1&A2&B1&!B2&C1	0.0100	ZN(HL)	0.0010	0.1880
C2	A1&!A2&!B1&!B2&C1	0.0100	ZN(HL)	0.0010	0.2009
C2	A1&!A2&!B1&B2&C1	0.0100	ZN(HL)	0.0010	0.1880
C2	A1&!A2&B1&!B2&C1	0.0100	ZN(HL)	0.0010	0.1879
C1	!A1&!A2&!B1&!B2&C2	0.0100	ZN(LH)	0.0010	0.6546
C1	!A1&!A2&!B1&B2&C2	0.0100	ZN(LH)	0.0010	0.6115
C1	!A1&!A2&B1&!B2&C2	0.0100	ZN(LH)	0.0010	0.6957
C1	!A1&A2&!B1&!B2&C2	0.0100	ZN(LH)	0.0010	0.6104
C1	!A1&A2&!B1&B2&C2	0.0100	ZN(LH)	0.0010	0.5671
C1	!A1&A2&B1&!B2&C2	0.0100	ZN(LH)	0.0010	0.6516
C1	A1&!A2&!B1&!B2&C2	0.0100	ZN(LH)	0.0010	0.6927
C1	A1&!A2&!B1&B2&C2	0.0100	ZN(LH)	0.0010	0.6496
C1	A1&!A2&B1&!B2&C2	0.0100	ZN(LH)	0.0010	0.7329
C2	!A1&!A2&!B1&!B2&C1	0.0100	ZN(LH)	0.0010	0.7234
C2	!A1&!A2&!B1&B2&C1	0.0100	ZN(LH)	0.0010	0.6801
C2	!A1&!A2&B1&!B2&C1	0.0100	ZN(LH)	0.0010	0.7625
C2	!A1&A2&!B1&!B2&C1	0.0100	ZN(LH)	0.0010	0.6790
C2	!A1&A2&!B1&B2&C1	0.0100	ZN(LH)	0.0010	0.6360
C2	!A1&A2&B1&!B2&C1	0.0100	ZN(LH)	0.0010	0.7185
C2	A1&!A2&!B1&!B2&C1	0.0100	ZN(LH)	0.0010	0.7597
C2	A1&!A2&!B1&B2&C1	0.0100	ZN(LH)	0.0010	0.7166
C2	A1&!A2&B1&!B2&C1	0.0100	ZN(LH)	0.0010	0.7990
A1	A2&!B1&!B2&!C1&!C2	0.0100	ZN(HL)	0.0010	0.0079
A1	A2&!B1&!B2&!C1&C2	0.0100	ZN(HL)	0.0010	0.0078
A1	A2&!B1&!B2&C1&!C2	0.0100	ZN(HL)	0.0010	0.0078
A1	A2&!B1&B2&!C1&!C2	0.0100	ZN(HL)	0.0010	0.0085
A1	A2&!B1&B2&!C1&C2	0.0100	ZN(HL)	0.0010	0.0085
A1	A2&!B1&B2&C1&!C2	0.0100	ZN(HL)	0.0010	0.0084
A1	A2&B1&!B2&!C1&!C2	0.0100	ZN(HL)	0.0010	0.0084
A1	A2&B1&!B2&!C1&C2	0.0100	ZN(HL)	0.0010	0.0084
A1	A2&B1&!B2&C1&!C2	0.0100	ZN(HL)	0.0010	0.0084

continues on next page

Table 29 – continued from previous page

B2	!A1&!A2&B1&!C1&!C2	0.0100	ZN(HL)	0.0010	0.1195
B2	!A1&!A2&B1&!C1&C2	0.0100	ZN(HL)	0.0010	0.1204
B2	!A1&!A2&B1&C1&!C2	0.0100	ZN(HL)	0.0010	0.1205
B2	!A1&A2&B1&!C1&!C2	0.0100	ZN(HL)	0.0010	0.1065
B2	!A1&A2&B1&!C1&C2	0.0100	ZN(HL)	0.0010	0.1074
B2	!A1&A2&B1&C1&!C2	0.0100	ZN(HL)	0.0010	0.1075
B2	A1&!A2&B1&!C1&!C2	0.0100	ZN(HL)	0.0010	0.1066
B2	A1&!A2&B1&!C1&C2	0.0100	ZN(HL)	0.0010	0.1075
B2	A1&!A2&B1&C1&!C2	0.0100	ZN(HL)	0.0010	0.1074
B2(LH)	!A1&!A2&!B1&!C1&!C2	0.0100	n/a	n/a	-0.0791
B2(LH)	!A1&!A2&!B1&!C1&C2	0.0100	n/a	n/a	-0.0791
B2(LH)	!A1&!A2&!B1&C1&!C2	0.0100	n/a	n/a	-0.0791
B2(LH)	!A1&A2&!B1&!C1&!C2	0.0100	n/a	n/a	-0.0790
B2(LH)	!A1&A2&!B1&!C1&C2	0.0100	n/a	n/a	-0.0790
B2(LH)	!A1&A2&!B1&C1&!C2	0.0100	n/a	n/a	-0.0790
B2(LH)	A1&!A2&!B1&!C1&!C2	0.0100	n/a	n/a	-0.0790
B2(LH)	A1&!A2&!B1&!C1&C2	0.0100	n/a	n/a	-0.0790
B2(LH)	A1&!A2&!B1&C1&!C2	0.0100	n/a	n/a	-0.0790
B2(LH)	!A1&!A2&!B1&C1&C2	0.0100	n/a	n/a	-0.0230
B2(LH)	!A1&!A2&B1&C1&C2	0.0100	n/a	n/a	-0.0237
B2(LH)	!A1&A2&!B1&C1&C2	0.0100	n/a	n/a	-0.0231
B2(LH)	!A1&A2&B1&C1&C2	0.0100	n/a	n/a	-0.0238
B2(LH)	A1&!A2&!B1&C1&C2	0.0100	n/a	n/a	-0.0231
B2(LH)	A1&!A2&B1&C1&C2	0.0100	n/a	n/a	-0.0238
B2(LH)	A1&A2&!B1&!C1&!C2	0.0100	n/a	n/a	-0.0788
B2(LH)	A1&A2&!B1&!C1&C2	0.0100	n/a	n/a	-0.0788
B2(LH)	A1&A2&!B1&C1&!C2	0.0100	n/a	n/a	-0.0788
B2(LH)	A1&A2&!B1&C1&C2	0.0100	n/a	n/a	-0.0434
B2(LH)	A1&A2&B1&!C1&!C2	0.0100	n/a	n/a	-0.0617
B2(LH)	A1&A2&B1&!C1&C2	0.0100	n/a	n/a	-0.0611
B2(LH)	A1&A2&B1&C1&!C2	0.0100	n/a	n/a	-0.0611
B2(LH)	A1&A2&B1&C1&C2	0.0100	n/a	n/a	-0.0454
C2(HL)	!A1&!A2&!B1&!B2&!C1	0.0100	n/a	n/a	0.0871
C2(HL)	!A1&!A2&!B1&B2&!C1	0.0100	n/a	n/a	0.0871
C2(HL)	!A1&!A2&B1&!B2&!C1	0.0100	n/a	n/a	0.0871
C2(HL)	!A1&A2&!B1&!B2&!C1	0.0100	n/a	n/a	0.0871
C2(HL)	!A1&A2&!B1&B2&!C1	0.0100	n/a	n/a	0.0871
C2(HL)	!A1&A2&B1&!B2&!C1	0.0100	n/a	n/a	0.0871
C2(HL)	A1&!A2&!B1&!B2&!C1	0.0100	n/a	n/a	0.0871
C2(HL)	A1&!A2&!B1&B2&!C1	0.0100	n/a	n/a	0.0871
C2(HL)	A1&!A2&B1&!B2&!C1	0.0100	n/a	n/a	0.0871
C2(HL)	!A1&!A2&B1&B2&!C1	0.0100	n/a	n/a	0.0788
C2(HL)	!A1&!A2&B1&B2&C1	0.0100	n/a	n/a	0.0788
C2(HL)	!A1&A2&B1&B2&!C1	0.0100	n/a	n/a	0.0788
C2(HL)	!A1&A2&B1&B2&C1	0.0100	n/a	n/a	0.0788
C2(HL)	A1&!A2&B1&B2&!C1	0.0100	n/a	n/a	0.0788
C2(HL)	A1&!A2&B1&B2&C1	0.0100	n/a	n/a	0.0788
C2(HL)	A1&A2&!B1&!B2&!C1	0.0100	n/a	n/a	0.0788
C2(HL)	A1&A2&!B1&!B2&C1	0.0100	n/a	n/a	0.0788
C2(HL)	A1&A2&!B1&B2&!C1	0.0100	n/a	n/a	0.0789
C2(HL)	A1&A2&!B1&B2&C1	0.0100	n/a	n/a	0.0788
C2(HL)	A1&A2&B1&!B2&!C1	0.0100	n/a	n/a	0.0789

continues on next page

Table 29 – continued from previous page

C2(HL)	A1&A2&B1&!B2&C1	0.0100	n/a	n/a	0.0788
C2(HL)	A1&A2&B1&B2&!C1	0.0100	n/a	n/a	0.0789
C2(HL)	A1&A2&B1&B2&C1	0.0100	n/a	n/a	0.0788
B2(HL)	!A1&!A2&!B1&!C1&!C2	0.0100	n/a	n/a	0.0873
B2(HL)	!A1&!A2&!B1&!C1&C2	0.0100	n/a	n/a	0.0872
B2(HL)	!A1&!A2&!B1&C1&!C2	0.0100	n/a	n/a	0.0872
B2(HL)	!A1&A2&!B1&!C1&!C2	0.0100	n/a	n/a	0.0874
B2(HL)	!A1&A2&!B1&!C1&C2	0.0100	n/a	n/a	0.0873
B2(HL)	!A1&A2&!B1&C1&!C2	0.0100	n/a	n/a	0.0873
B2(HL)	A1&!A2&!B1&!C1&!C2	0.0100	n/a	n/a	0.0874
B2(HL)	A1&!A2&!B1&!C1&C2	0.0100	n/a	n/a	0.0873
B2(HL)	A1&!A2&!B1&C1&!C2	0.0100	n/a	n/a	0.0873
B2(HL)	!A1&!A2&!B1&C1&C2	0.0100	n/a	n/a	0.0248
B2(HL)	!A1&!A2&B1&C1&C2	0.0100	n/a	n/a	0.0835
B2(HL)	!A1&A2&!B1&C1&C2	0.0100	n/a	n/a	0.0249
B2(HL)	!A1&A2&B1&C1&C2	0.0100	n/a	n/a	0.0832
B2(HL)	A1&!A2&!B1&C1&C2	0.0100	n/a	n/a	0.0249
B2(HL)	A1&!A2&B1&C1&C2	0.0100	n/a	n/a	0.0832
B2(HL)	A1&A2&!B1&!C1&!C2	0.0100	n/a	n/a	0.0790
B2(HL)	A1&A2&!B1&!C1&C2	0.0100	n/a	n/a	0.0789
B2(HL)	A1&A2&!B1&C1&!C2	0.0100	n/a	n/a	0.0789
B2(HL)	A1&A2&!B1&C1&C2	0.0100	n/a	n/a	0.0413
B2(HL)	A1&A2&B1&!C1&!C2	0.0100	n/a	n/a	0.0790
B2(HL)	A1&A2&B1&!C1&C2	0.0100	n/a	n/a	0.0789
B2(HL)	A1&A2&B1&C1&!C2	0.0100	n/a	n/a	0.0789
B2(HL)	A1&A2&B1&C1&C2	0.0100	n/a	n/a	0.0437
C2(LH)	!A1&!A2&!B1&!B2&!C1	0.0100	n/a	n/a	-0.0787
C2(LH)	!A1&!A2&!B1&B2&!C1	0.0100	n/a	n/a	-0.0787
C2(LH)	!A1&!A2&B1&!B2&!C1	0.0100	n/a	n/a	-0.0787
C2(LH)	!A1&A2&!B1&!B2&!C1	0.0100	n/a	n/a	-0.0787
C2(LH)	!A1&A2&!B1&B2&!C1	0.0100	n/a	n/a	-0.0787
C2(LH)	!A1&A2&B1&!B2&!C1	0.0100	n/a	n/a	-0.0787
C2(LH)	A1&!A2&!B1&!B2&!C1	0.0100	n/a	n/a	-0.0787
C2(LH)	A1&!A2&!B1&B2&!C1	0.0100	n/a	n/a	-0.0787
C2(LH)	A1&!A2&B1&!B2&!C1	0.0100	n/a	n/a	-0.0787
C2(LH)	!A1&!A2&B1&B2&!C1	0.0100	n/a	n/a	-0.0785
C2(LH)	!A1&!A2&B1&B2&C1	0.0100	n/a	n/a	-0.0658
C2(LH)	!A1&A2&B1&B2&!C1	0.0100	n/a	n/a	-0.0785
C2(LH)	!A1&A2&B1&B2&C1	0.0100	n/a	n/a	-0.0658
C2(LH)	A1&!A2&B1&B2&!C1	0.0100	n/a	n/a	-0.0785
C2(LH)	A1&!A2&B1&B2&C1	0.0100	n/a	n/a	-0.0658
C2(LH)	A1&A2&!B1&!B2&!C1	0.0100	n/a	n/a	-0.0785
C2(LH)	A1&A2&!B1&!B2&C1	0.0100	n/a	n/a	-0.0622
C2(LH)	A1&A2&!B1&B2&!C1	0.0100	n/a	n/a	-0.0785
C2(LH)	A1&A2&!B1&B2&C1	0.0100	n/a	n/a	-0.0636
C2(LH)	A1&A2&B1&!B2&!C1	0.0100	n/a	n/a	-0.0785
C2(LH)	A1&A2&B1&!B2&C1	0.0100	n/a	n/a	-0.0636
C2(LH)	A1&A2&B1&B2&!C1	0.0100	n/a	n/a	-0.0785
C2(LH)	A1&A2&B1&B2&C1	0.0100	n/a	n/a	-0.0673
A2(LH)	!A1&!B1&!B2&!C1&!C2	0.0100	n/a	n/a	-0.0793
A2(LH)	!A1&!B1&!B2&!C1&C2	0.0100	n/a	n/a	-0.0793
A2(LH)	!A1&!B1&!B2&C1&!C2	0.0100	n/a	n/a	-0.0793

continues on next page

Table 29 – continued from previous page

A2(LH)	!A1&!B1&B2&!C1&!C2	0.0100	n/a	n/a	-0.0793
A2(LH)	!A1&!B1&B2&!C1&C2	0.0100	n/a	n/a	-0.0793
A2(LH)	!A1&!B1&B2&C1&!C2	0.0100	n/a	n/a	-0.0793
A2(LH)	!A1&B1&!B2&!C1&!C2	0.0100	n/a	n/a	-0.0793
A2(LH)	!A1&B1&!B2&!C1&C2	0.0100	n/a	n/a	-0.0793
A2(LH)	!A1&B1&!B2&C1&!C2	0.0100	n/a	n/a	-0.0793
A2(LH)	!A1&!B1&!B2&C1&C2	0.0100	n/a	n/a	-0.0195
A2(LH)	!A1&!B1&B2&C1&C2	0.0100	n/a	n/a	-0.0194
A2(LH)	!A1&B1&!B2&C1&C2	0.0100	n/a	n/a	-0.0194
A2(LH)	!A1&B1&B2&!C1&!C2	0.0100	n/a	n/a	-0.0196
A2(LH)	!A1&B1&B2&!C1&C2	0.0100	n/a	n/a	-0.0196
A2(LH)	!A1&B1&B2&C1&!C2	0.0100	n/a	n/a	-0.0196
A2(LH)	!A1&B1&B2&C1&C2	0.0100	n/a	n/a	-0.0196
A2(LH)	A1&!B1&!B2&C1&C2	0.0100	n/a	n/a	-0.0203
A2(LH)	A1&!B1&B2&C1&C2	0.0100	n/a	n/a	-0.0203
A2(LH)	A1&B1&!B2&C1&C2	0.0100	n/a	n/a	-0.0204
A2(LH)	A1&B1&B2&!C1&!C2	0.0100	n/a	n/a	-0.0204
A2(LH)	A1&B1&B2&!C1&C2	0.0100	n/a	n/a	-0.0204
A2(LH)	A1&B1&B2&C1&!C2	0.0100	n/a	n/a	-0.0204
A2(LH)	A1&B1&B2&C1&C2	0.0100	n/a	n/a	-0.0204
A1(LH)	!A2&!B1&!B2&!C1&!C2	0.0100	n/a	n/a	-0.0591
A1(LH)	!A2&!B1&!B2&!C1&C2	0.0100	n/a	n/a	-0.0591
A1(LH)	!A2&!B1&!B2&C1&!C2	0.0100	n/a	n/a	-0.0591
A1(LH)	!A2&!B1&B2&!C1&!C2	0.0100	n/a	n/a	-0.0591
A1(LH)	!A2&!B1&B2&!C1&C2	0.0100	n/a	n/a	-0.0591
A1(LH)	!A2&!B1&B2&C1&!C2	0.0100	n/a	n/a	-0.0591
A1(LH)	!A2&B1&!B2&!C1&!C2	0.0100	n/a	n/a	-0.0592
A1(LH)	!A2&B1&!B2&!C1&C2	0.0100	n/a	n/a	-0.0592
A1(LH)	!A2&B1&!B2&C1&!C2	0.0100	n/a	n/a	-0.0591
A1(LH)	!A2&!B1&!B2&C1&C2	0.0100	n/a	n/a	-0.0195
A1(LH)	!A2&!B1&B2&C1&C2	0.0100	n/a	n/a	-0.0194
A1(LH)	!A2&B1&!B2&C1&C2	0.0100	n/a	n/a	-0.0194
A1(LH)	!A2&B1&B2&!C1&!C2	0.0100	n/a	n/a	-0.0196
A1(LH)	!A2&B1&B2&!C1&C2	0.0100	n/a	n/a	-0.0196
A1(LH)	!A2&B1&B2&C1&!C2	0.0100	n/a	n/a	-0.0196
A1(LH)	!A2&B1&B2&C1&C2	0.0100	n/a	n/a	-0.0196
A1(LH)	A2&!B1&!B2&C1&C2	0.0100	n/a	n/a	-0.0203
A1(LH)	A2&!B1&B2&C1&C2	0.0100	n/a	n/a	-0.0203
A1(LH)	A2&B1&!B2&C1&C2	0.0100	n/a	n/a	-0.0203
A1(LH)	A2&B1&B2&!C1&!C2	0.0100	n/a	n/a	-0.0204
A1(LH)	A2&B1&B2&!C1&C2	0.0100	n/a	n/a	-0.0204
A1(LH)	A2&B1&B2&C1&!C2	0.0100	n/a	n/a	-0.0204
A1(LH)	A2&B1&B2&C1&C2	0.0100	n/a	n/a	-0.0204
C1(LH)	!A1&!A2&!B1&!B2&!C2	0.0100	n/a	n/a	-0.0600
C1(LH)	!A1&!A2&!B1&B2&!C2	0.0100	n/a	n/a	-0.0599
C1(LH)	!A1&!A2&B1&!B2&!C2	0.0100	n/a	n/a	-0.0599
C1(LH)	!A1&A2&!B1&!B2&!C2	0.0100	n/a	n/a	-0.0599
C1(LH)	!A1&A2&!B1&B2&!C2	0.0100	n/a	n/a	-0.0599
C1(LH)	!A1&A2&B1&!B2&!C2	0.0100	n/a	n/a	-0.0599
C1(LH)	A1&!A2&!B1&!B2&!C2	0.0100	n/a	n/a	-0.0599
C1(LH)	A1&!A2&!B1&B2&!C2	0.0100	n/a	n/a	-0.0599
C1(LH)	A1&!A2&B1&!B2&!C2	0.0100	n/a	n/a	-0.0599

continues on next page

Table 29 – continued from previous page

C1(LH)	!A1&!A2&B1&B2&!C2	0.0100	n/a	n/a	-0.0783
C1(LH)	!A1&!A2&B1&B2&C2	0.0100	n/a	n/a	-0.0656
C1(LH)	!A1&A2&B1&B2&!C2	0.0100	n/a	n/a	-0.0783
C1(LH)	!A1&A2&B1&B2&C2	0.0100	n/a	n/a	-0.0656
C1(LH)	A1&!A2&B1&B2&!C2	0.0100	n/a	n/a	-0.0783
C1(LH)	A1&!A2&B1&B2&C2	0.0100	n/a	n/a	-0.0656
C1(LH)	A1&A2&!B1&!B2&!C2	0.0100	n/a	n/a	-0.0784
C1(LH)	A1&A2&!B1&!B2&C2	0.0100	n/a	n/a	-0.0620
C1(LH)	A1&A2&!B1&B2&!C2	0.0100	n/a	n/a	-0.0784
C1(LH)	A1&A2&!B1&B2&C2	0.0100	n/a	n/a	-0.0634
C1(LH)	A1&A2&B1&!B2&!C2	0.0100	n/a	n/a	-0.0784
C1(LH)	A1&A2&B1&!B2&C2	0.0100	n/a	n/a	-0.0634
C1(LH)	A1&A2&B1&B2&!C2	0.0100	n/a	n/a	-0.0783
C1(LH)	A1&A2&B1&B2&C2	0.0100	n/a	n/a	-0.0671
A2(HL)	!A1&!B1&!B2&!C1&!C2	0.0100	n/a	n/a	0.0872
A2(HL)	!A1&!B1&!B2&!C1&C2	0.0100	n/a	n/a	0.0872
A2(HL)	!A1&!B1&!B2&C1&!C2	0.0100	n/a	n/a	0.0872
A2(HL)	!A1&!B1&B2&!C1&!C2	0.0100	n/a	n/a	0.0871
A2(HL)	!A1&!B1&B2&!C1&C2	0.0100	n/a	n/a	0.0871
A2(HL)	!A1&!B1&B2&C1&!C2	0.0100	n/a	n/a	0.0871
A2(HL)	!A1&B1&!B2&!C1&!C2	0.0100	n/a	n/a	0.0871
A2(HL)	!A1&B1&!B2&!C1&C2	0.0100	n/a	n/a	0.0871
A2(HL)	!A1&B1&!B2&C1&!C2	0.0100	n/a	n/a	0.0871
A2(HL)	!A1&!B1&!B2&C1&C2	0.0100	n/a	n/a	0.0202
A2(HL)	!A1&!B1&B2&C1&C2	0.0100	n/a	n/a	0.0202
A2(HL)	!A1&B1&!B2&C1&C2	0.0100	n/a	n/a	0.0202
A2(HL)	!A1&B1&B2&!C1&!C2	0.0100	n/a	n/a	0.0203
A2(HL)	!A1&B1&B2&!C1&C2	0.0100	n/a	n/a	0.0203
A2(HL)	!A1&B1&B2&C1&!C2	0.0100	n/a	n/a	0.0203
A2(HL)	!A1&B1&B2&C1&C2	0.0100	n/a	n/a	0.0203
A2(HL)	A1&!B1&!B2&C1&C2	0.0100	n/a	n/a	0.1986
A2(HL)	A1&!B1&B2&C1&C2	0.0100	n/a	n/a	0.1863
A2(HL)	A1&B1&!B2&C1&C2	0.0100	n/a	n/a	0.1864
A2(HL)	A1&B1&B2&!C1&!C2	0.0100	n/a	n/a	0.1021
A2(HL)	A1&B1&B2&!C1&C2	0.0100	n/a	n/a	0.1021
A2(HL)	A1&B1&B2&C1&!C2	0.0100	n/a	n/a	0.1021
A2(HL)	A1&B1&B2&C1&C2	0.0100	n/a	n/a	0.1021
B1(HL)	!A1&!A2&!B2&!C1&!C2	0.0100	n/a	n/a	0.0879
B1(HL)	!A1&!A2&!B2&!C1&C2	0.0100	n/a	n/a	0.0877
B1(HL)	!A1&!A2&!B2&C1&!C2	0.0100	n/a	n/a	0.0877
B1(HL)	!A1&A2&!B2&!C1&!C2	0.0100	n/a	n/a	0.0879
B1(HL)	!A1&A2&!B2&!C1&C2	0.0100	n/a	n/a	0.0877
B1(HL)	!A1&A2&!B2&C1&!C2	0.0100	n/a	n/a	0.0877
B1(HL)	A1&!A2&!B2&!C1&!C2	0.0100	n/a	n/a	0.0879
B1(HL)	A1&!A2&!B2&!C1&C2	0.0100	n/a	n/a	0.0877
B1(HL)	A1&!A2&!B2&C1&!C2	0.0100	n/a	n/a	0.0877
B1(HL)	!A1&!A2&!B2&C1&C2	0.0100	n/a	n/a	0.0247
B1(HL)	!A1&!A2&B2&C1&C2	0.0100	n/a	n/a	0.0835
B1(HL)	!A1&A2&!B2&C1&C2	0.0100	n/a	n/a	0.0248
B1(HL)	!A1&A2&B2&C1&C2	0.0100	n/a	n/a	0.0831
B1(HL)	A1&!A2&!B2&C1&C2	0.0100	n/a	n/a	0.0248
B1(HL)	A1&!A2&B2&C1&C2	0.0100	n/a	n/a	0.0831

continues on next page

Table 29 – continued from previous page

B1(HL)	A1&A2&!B2&!C1&!C2	0.0100	n/a	n/a	0.0789
B1(HL)	A1&A2&!B2&!C1&C2	0.0100	n/a	n/a	0.0788
B1(HL)	A1&A2&!B2&C1&!C2	0.0100	n/a	n/a	0.0788
B1(HL)	A1&A2&!B2&C1&C2	0.0100	n/a	n/a	0.0412
B1(HL)	A1&A2&B2&!C1&!C2	0.0100	n/a	n/a	0.0788
B1(HL)	A1&A2&B2&!C1&C2	0.0100	n/a	n/a	0.0788
B1(HL)	A1&A2&B2&C1&!C2	0.0100	n/a	n/a	0.0788
B1(HL)	A1&A2&B2&C1&C2	0.0100	n/a	n/a	0.0436
C1(HL)	!A1&!A2&!B1&!B2&!C2	0.0100	n/a	n/a	0.0877
C1(HL)	!A1&!A2&!B1&B2&!C2	0.0100	n/a	n/a	0.0878
C1(HL)	!A1&!A2&B1&!B2&!C2	0.0100	n/a	n/a	0.0878
C1(HL)	!A1&A2&!B1&!B2&!C2	0.0100	n/a	n/a	0.0877
C1(HL)	!A1&A2&!B1&B2&!C2	0.0100	n/a	n/a	0.0876
C1(HL)	!A1&A2&B1&!B2&!C2	0.0100	n/a	n/a	0.0878
C1(HL)	A1&!A2&!B1&!B2&!C2	0.0100	n/a	n/a	0.0877
C1(HL)	A1&!A2&!B1&B2&!C2	0.0100	n/a	n/a	0.0876
C1(HL)	A1&!A2&B1&!B2&!C2	0.0100	n/a	n/a	0.0878
C1(HL)	!A1&!A2&B1&B2&!C2	0.0100	n/a	n/a	0.0788
C1(HL)	!A1&!A2&B1&B2&C2	0.0100	n/a	n/a	0.0785
C1(HL)	!A1&A2&B1&B2&!C2	0.0100	n/a	n/a	0.0788
C1(HL)	!A1&A2&B1&B2&C2	0.0100	n/a	n/a	0.0785
C1(HL)	A1&!A2&B1&B2&!C2	0.0100	n/a	n/a	0.0787
C1(HL)	A1&!A2&B1&B2&C2	0.0100	n/a	n/a	0.0785
C1(HL)	A1&A2&!B1&!B2&!C2	0.0100	n/a	n/a	0.0787
C1(HL)	A1&A2&!B1&!B2&C2	0.0100	n/a	n/a	0.0786
C1(HL)	A1&A2&!B1&B2&!C2	0.0100	n/a	n/a	0.0788
C1(HL)	A1&A2&!B1&B2&C2	0.0100	n/a	n/a	0.0786
C1(HL)	A1&A2&B1&!B2&!C2	0.0100	n/a	n/a	0.0787
C1(HL)	A1&A2&B1&!B2&C2	0.0100	n/a	n/a	0.0786
C1(HL)	A1&A2&B1&B2&!C2	0.0100	n/a	n/a	0.0788
C1(HL)	A1&A2&B1&B2&C2	0.0100	n/a	n/a	0.0785
A1(HL)	!A2&!B1&!B2&!C1&!C2	0.0100	n/a	n/a	0.0880
A1(HL)	!A2&!B1&!B2&!C1&C2	0.0100	n/a	n/a	0.0880
A1(HL)	!A2&!B1&!B2&C1&!C2	0.0100	n/a	n/a	0.0880
A1(HL)	!A2&!B1&B2&!C1&!C2	0.0100	n/a	n/a	0.0879
A1(HL)	!A2&!B1&B2&!C1&C2	0.0100	n/a	n/a	0.0880
A1(HL)	!A2&!B1&B2&C1&!C2	0.0100	n/a	n/a	0.0880
A1(HL)	!A2&B1&!B2&!C1&!C2	0.0100	n/a	n/a	0.0879
A1(HL)	!A2&B1&!B2&!C1&C2	0.0100	n/a	n/a	0.0880
A1(HL)	!A2&B1&!B2&C1&!C2	0.0100	n/a	n/a	0.0880
A1(HL)	!A2&!B1&!B2&C1&C2	0.0100	n/a	n/a	0.0201
A1(HL)	!A2&!B1&B2&C1&C2	0.0100	n/a	n/a	0.0202
A1(HL)	!A2&B1&!B2&C1&C2	0.0100	n/a	n/a	0.0202
A1(HL)	!A2&B1&B2&!C1&!C2	0.0100	n/a	n/a	0.0202
A1(HL)	!A2&B1&B2&!C1&C2	0.0100	n/a	n/a	0.0202
A1(HL)	!A2&B1&B2&C1&!C2	0.0100	n/a	n/a	0.0202
A1(HL)	!A2&B1&B2&C1&C2	0.0100	n/a	n/a	0.0202
A1(HL)	A2&!B1&!B2&C1&C2	0.0100	n/a	n/a	0.1985
A1(HL)	A2&!B1&B2&C1&C2	0.0100	n/a	n/a	0.1863
A1(HL)	A2&B1&!B2&C1&C2	0.0100	n/a	n/a	0.1863
A1(HL)	A2&B1&B2&!C1&!C2	0.0100	n/a	n/a	0.1020
A1(HL)	A2&B1&B2&!C1&C2	0.0100	n/a	n/a	0.1020

continues on next page

Table 29 – continued from previous page

A1(HL)	A2&B1&B2&C1&!C2	0.0100	n/a	n/a	0.1020
A1(HL)	A2&B1&B2&C1&C2	0.0100	n/a	n/a	0.1020
B1(LH)	!A1&!A2&!B2&!C1&!C2	0.0100	n/a	n/a	-0.0569
B1(LH)	!A1&!A2&!B2&!C1&C2	0.0100	n/a	n/a	-0.0569
B1(LH)	!A1&!A2&!B2&C1&!C2	0.0100	n/a	n/a	-0.0569
B1(LH)	!A1&A2&!B2&!C1&!C2	0.0100	n/a	n/a	-0.0568
B1(LH)	!A1&A2&!B2&!C1&C2	0.0100	n/a	n/a	-0.0569
B1(LH)	!A1&A2&!B2&C1&!C2	0.0100	n/a	n/a	-0.0569
B1(LH)	A1&!A2&!B2&!C1&!C2	0.0100	n/a	n/a	-0.0569
B1(LH)	A1&!A2&!B2&!C1&C2	0.0100	n/a	n/a	-0.0569
B1(LH)	A1&!A2&!B2&C1&!C2	0.0100	n/a	n/a	-0.0569
B1(LH)	!A1&!A2&!B2&C1&C2	0.0100	n/a	n/a	-0.0230
B1(LH)	!A1&!A2&B2&C1&C2	0.0100	n/a	n/a	-0.0237
B1(LH)	!A1&A2&!B2&C1&C2	0.0100	n/a	n/a	-0.0231
B1(LH)	!A1&A2&B2&C1&C2	0.0100	n/a	n/a	-0.0238
B1(LH)	A1&!A2&!B2&C1&C2	0.0100	n/a	n/a	-0.0231
B1(LH)	A1&!A2&B2&C1&C2	0.0100	n/a	n/a	-0.0238
B1(LH)	A1&A2&!B2&!C1&!C2	0.0100	n/a	n/a	-0.0788
B1(LH)	A1&A2&!B2&!C1&C2	0.0100	n/a	n/a	-0.0787
B1(LH)	A1&A2&!B2&C1&!C2	0.0100	n/a	n/a	-0.0787
B1(LH)	A1&A2&!B2&C1&C2	0.0100	n/a	n/a	-0.0433
B1(LH)	A1&A2&B2&!C1&!C2	0.0100	n/a	n/a	-0.0616
B1(LH)	A1&A2&B2&!C1&C2	0.0100	n/a	n/a	-0.0610
B1(LH)	A1&A2&B2&C1&!C2	0.0100	n/a	n/a	-0.0611
B1(LH)	A1&A2&B2&C1&C2	0.0100	n/a	n/a	-0.0454

LEAKAGE POWER

When Condition	Power (nW)
!A1&!A2&!B1&!B2&!C1&!C2	0.2013
!A1&!A2&!B1&!B2&!C1&C2	0.2018
!A1&!A2&!B1&!B2&C1&!C2	0.2816
!A1&!A2&!B1&B2&!C1&!C2	0.2018
!A1&!A2&!B1&B2&!C1&C2	0.2022
!A1&!A2&!B1&B2&C1&!C2	0.2821
!A1&!A2&B1&!B2&!C1&!C2	0.2816
!A1&!A2&B1&!B2&!C1&C2	0.2821
!A1&!A2&B1&!B2&C1&!C2	0.3619
!A1&A2&!B1&!B2&!C1&!C2	0.2018
!A1&A2&!B1&!B2&!C1&C2	0.2022
!A1&A2&!B1&!B2&C1&!C2	0.2821
!A1&A2&!B1&B2&!C1&!C2	0.2022
!A1&A2&!B1&B2&!C1&C2	0.2027
!A1&A2&!B1&B2&C1&!C2	0.2825
!A1&A2&B1&!B2&!C1&!C2	0.2821
!A1&A2&B1&!B2&!C1&C2	0.2825
!A1&A2&B1&!B2&C1&!C2	0.3623

continues on next page

Table 30 – continued from previous page

A1&!A2&!B1&!B2&!C1&!C2	0.2816
A1&!A2&!B1&!B2&!C1&C2	0.2821
A1&!A2&!B1&!B2&C1&!C2	0.3619
A1&!A2&!B1&B2&!C1&!C2	0.2821
A1&!A2&!B1&B2&!C1&C2	0.2825
A1&!A2&!B1&B2&C1&!C2	0.3623
A1&!A2&B1&!B2&!C1&!C2	0.3619
A1&!A2&B1&!B2&!C1&C2	0.3623
A1&!A2&B1&!B2&C1&!C2	0.4422
!A1&!A2&!B1&!B2&C1&C2	0.4399
!A1&!A2&!B1&B2&C1&C2	0.4435
!A1&!A2&B1&!B2&C1&C2	0.4435
!A1&!A2&B1&B2&!C1&!C2	0.2985
!A1&!A2&B1&B2&!C1&C2	0.2985
!A1&!A2&B1&B2&C1&!C2	0.2985
!A1&!A2&B1&B2&C1&C2	0.2985
!A1&A2&!B1&!B2&C1&C2	0.4439
!A1&A2&!B1&B2&C1&C2	0.4476
!A1&A2&B1&!B2&C1&C2	0.4476
!A1&A2&B1&B2&!C1&!C2	0.3029
!A1&A2&B1&B2&!C1&C2	0.3029
!A1&A2&B1&B2&C1&!C2	0.3029
!A1&A2&B1&B2&C1&C2	0.3029
A1&!A2&!B1&!B2&C1&C2	0.4439
A1&!A2&!B1&B2&C1&C2	0.4476
A1&!A2&B1&!B2&C1&C2	0.4476
A1&!A2&B1&B2&!C1&!C2	0.3029
A1&!A2&B1&B2&!C1&C2	0.3029
A1&!A2&B1&B2&C1&!C2	0.3029
A1&!A2&B1&B2&C1&C2	0.3029
A1&A2&!B1&!B2&!C1&!C2	0.1560
A1&A2&!B1&!B2&!C1&C2	0.1560
A1&A2&!B1&!B2&C1&!C2	0.1560
A1&A2&!B1&!B2&C1&C2	0.1560
A1&A2&!B1&B2&!C1&!C2	0.1560
A1&A2&!B1&B2&!C1&C2	0.1560
A1&A2&!B1&B2&C1&!C2	0.1560
A1&A2&!B1&B2&C1&C2	0.1560
A1&A2&B1&!B2&!C1&!C2	0.1560
A1&A2&B1&!B2&!C1&C2	0.1560
A1&A2&B1&!B2&C1&!C2	0.1560
A1&A2&B1&!B2&C1&C2	0.1560
A1&A2&B1&B2&!C1&!C2	0.1560
A1&A2&B1&B2&!C1&C2	0.1560
A1&A2&B1&B2&C1&!C2	0.1560
A1&A2&B1&B2&C1&C2	0.1560

gf180mcu_fd_sc_mcu7t5v0__aoi222_4

gf180mcu_fd_sc_mcu7t5v0__aoi222_4 symbol

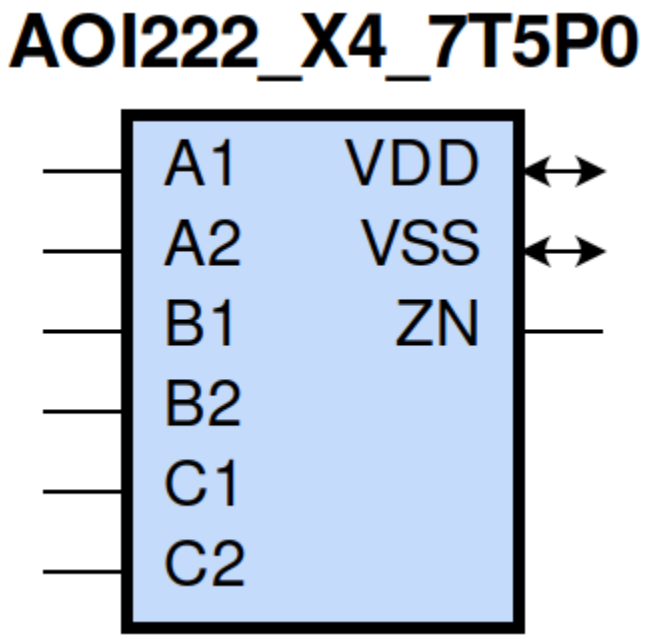

gf180mcu_fd_sc_mcu7t5v0__aoi222_4 schematic

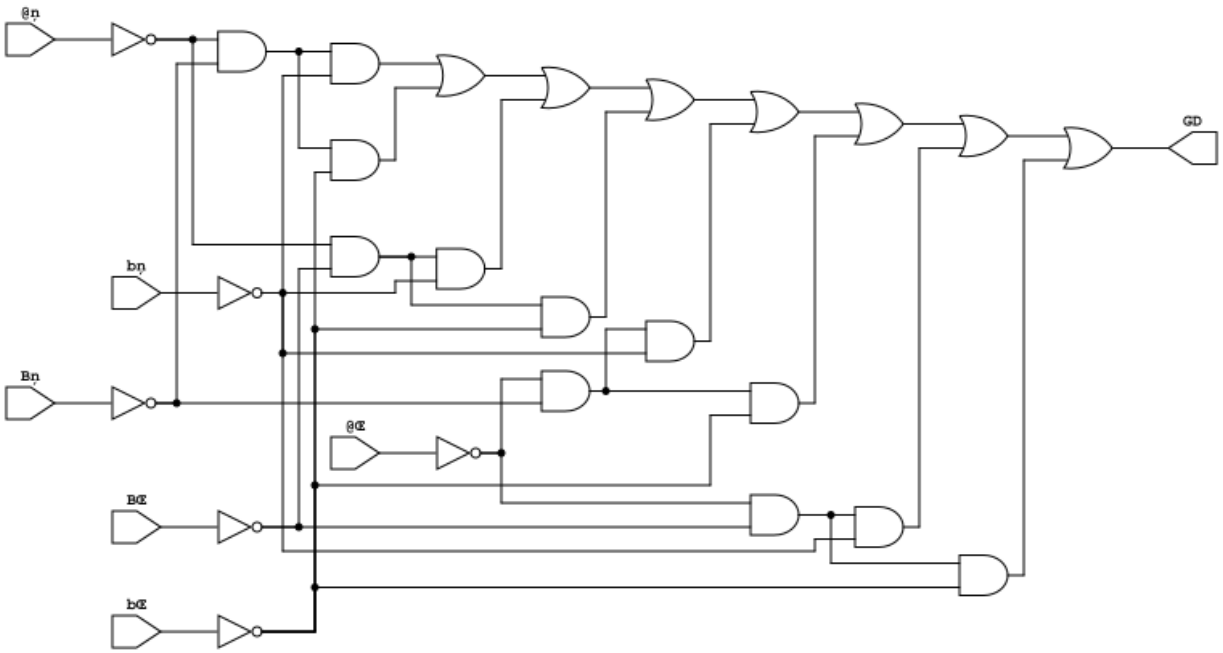

gf180mcu_fd_sc_mcu7t5v0__aoi222_4 layout

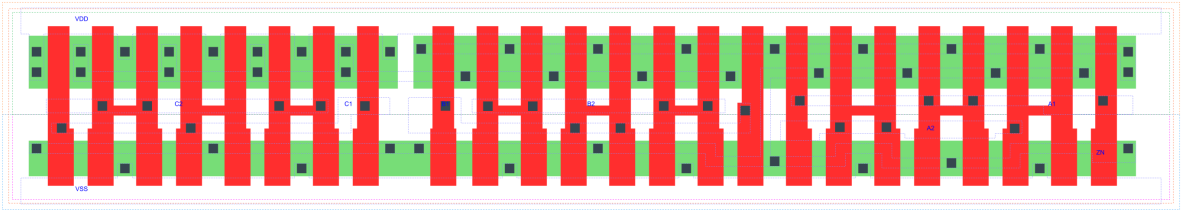

AOI222_X4 is a three 2-input AND into 3-input NOR, NOR[AND(A1,A2),AND(B1,B2),AND(C1,C2)], 4X drive strength

Attributes

Attribute	Value
area	103.174400 μm^2

OUTPUT FUNCTIONS

Output Pin	Function
ZN	(((!A1)&(!B1)&(!C1))|((!A1)&(!B1)&(!C2))|((!A1)&(!B2)&(!C1))|((!A1)&(!B2)&(!C2))|((!A2)&(!B1)&(!C1))|((!A2)&(!E

TRUTH TABLE FOR ZN

A1	A2	B1	B2	C1	C2	ZN
0	?	0	?	0	?	1
0	?	0	?	?	0	1
0	?	?	0	0	?	1
0	?	?	0	?	0	1
?	0	0	?	0	?	1
?	0	0	?	?	0	1
?	0	?	0	0	?	1
?	0	?	0	?	0	1
1	1	?	?	?	?	0
?	?	1	1	?	?	0
?	?	?	?	1	1	0

FUNCTIONAL SCHEMATIC

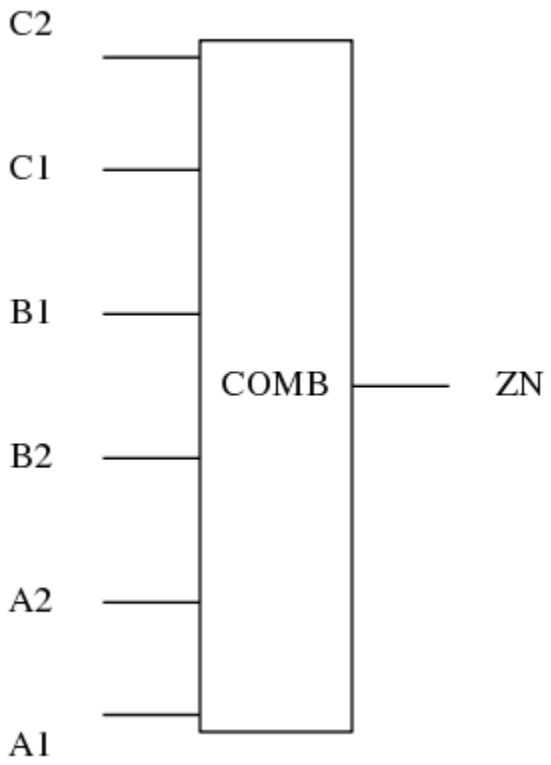

PIN CAPACITANCE (pf)

Pin	Type	Capacitance (pf)
C2	input	0.0185
C1	input	0.0196
B1	input	0.0197
B2	input	0.0184
A2	input	0.0190
A1	input	0.0195

DELAY AND OUTPUT TRANSITION TIME corresponding to min slew and load

Input Pin	Output	When Condition	Tin (ns)	Out Load (pf)	Delay (ns)	Tout (ns)
C2(LH)	ZN(HL)	!A1&!A2&!B1&!B2&C1	0.0100	0.0010	0.1716	0.1166

continues on next page

Table 31 – continued from previous page

C2(LH)	ZN(HL)	!A1&!A2&!B1&B2&C1	0.0100	0.0010	0.1611	0.1089
C2(LH)	ZN(HL)	!A1&!A2&B1&!B2&C1	0.0100	0.0010	0.1740	0.1308
C2(LH)	ZN(HL)	!A1&A2&!B1&!B2&C1	0.0100	0.0010	0.1310	0.0999
C2(LH)	ZN(HL)	!A1&A2&!B1&B2&C1	0.0100	0.0010	0.1259	0.0940
C2(LH)	ZN(HL)	!A1&A2&B1&!B2&C1	0.0100	0.0010	0.1391	0.1172
C2(LH)	ZN(HL)	A1&!A2&!B1&!B2&C1	0.0100	0.0010	0.1450	0.1241
C2(LH)	ZN(HL)	A1&!A2&!B1&B2&C1	0.0100	0.0010	0.1391	0.1172
C2(LH)	ZN(HL)	A1&!A2&B1&!B2&C1	0.0100	0.0010	0.1529	0.1397
C2(HL)	ZN(LH)	!A1&!A2&!B1&!B2&C1	0.0100	0.0010	0.2782	0.1708
C2(HL)	ZN(LH)	!A1&!A2&!B1&B2&C1	0.0100	0.0010	0.3223	0.2104
C2(HL)	ZN(LH)	!A1&!A2&B1&!B2&C1	0.0100	0.0010	0.3694	0.2464
C2(HL)	ZN(LH)	!A1&A2&!B1&!B2&C1	0.0100	0.0010	0.3242	0.1762
C2(HL)	ZN(LH)	!A1&A2&!B1&B2&C1	0.0100	0.0010	0.3632	0.2100
C2(HL)	ZN(LH)	!A1&A2&B1&!B2&C1	0.0100	0.0010	0.4191	0.2526
C2(HL)	ZN(LH)	A1&!A2&!B1&!B2&C1	0.0100	0.0010	0.3715	0.2113
C2(HL)	ZN(LH)	A1&!A2&!B1&B2&C1	0.0100	0.0010	0.4188	0.2524
C2(HL)	ZN(LH)	A1&!A2&B1&!B2&C1	0.0100	0.0010	0.4746	0.2956
C1(LH)	ZN(HL)	!A1&!A2&!B1&!B2&C2	0.0100	0.0010	0.1603	0.1168
C1(LH)	ZN(HL)	!A1&!A2&!B1&B2&C2	0.0100	0.0010	0.1496	0.1092
C1(LH)	ZN(HL)	!A1&!A2&B1&!B2&C2	0.0100	0.0010	0.1625	0.1311
C1(LH)	ZN(HL)	!A1&A2&!B1&!B2&C2	0.0100	0.0010	0.1192	0.1005
C1(LH)	ZN(HL)	!A1&A2&!B1&B2&C2	0.0100	0.0010	0.1141	0.0945
C1(LH)	ZN(HL)	!A1&A2&B1&!B2&C2	0.0100	0.0010	0.1274	0.1181
C1(LH)	ZN(HL)	A1&!A2&!B1&!B2&C2	0.0100	0.0010	0.1334	0.1248
C1(LH)	ZN(HL)	A1&!A2&!B1&B2&C2	0.0100	0.0010	0.1273	0.1180
C1(LH)	ZN(HL)	A1&!A2&B1&!B2&C2	0.0100	0.0010	0.1412	0.1403
C1(HL)	ZN(LH)	!A1&!A2&!B1&!B2&C2	0.0100	0.0010	0.2465	0.1423
C1(HL)	ZN(LH)	!A1&!A2&!B1&B2&C2	0.0100	0.0010	0.2836	0.1743
C1(HL)	ZN(LH)	!A1&!A2&B1&!B2&C2	0.0100	0.0010	0.3321	0.2103
C1(HL)	ZN(LH)	!A1&A2&!B1&!B2&C2	0.0100	0.0010	0.2851	0.1411
C1(HL)	ZN(LH)	!A1&A2&!B1&B2&C2	0.0100	0.0010	0.3170	0.1670
C1(HL)	ZN(LH)	!A1&A2&B1&!B2&C2	0.0100	0.0010	0.3747	0.2096
C1(HL)	ZN(LH)	A1&!A2&!B1&!B2&C2	0.0100	0.0010	0.3340	0.1752
C1(HL)	ZN(LH)	A1&!A2&!B1&B2&C2	0.0100	0.0010	0.3743	0.2093
C1(HL)	ZN(LH)	A1&!A2&B1&!B2&C2	0.0100	0.0010	0.4312	0.2523
B1(LH)	ZN(HL)	!A1&!A2&B2&!C1&!C2	0.0100	0.0010	0.1295	0.0848
B1(LH)	ZN(HL)	!A1&!A2&B2&!C1&C2	0.0100	0.0010	0.1297	0.0854
B1(LH)	ZN(HL)	!A1&!A2&B2&C1&!C2	0.0100	0.0010	0.1397	0.1039
B1(LH)	ZN(HL)	!A1&A2&B2&!C1&!C2	0.0100	0.0010	0.1074	0.0757
B1(LH)	ZN(HL)	!A1&A2&B2&!C1&C2	0.0100	0.0010	0.1076	0.0756
B1(LH)	ZN(HL)	!A1&A2&B2&C1&!C2	0.0100	0.0010	0.1177	0.0951
B1(LH)	ZN(HL)	A1&!A2&B2&!C1&!C2	0.0100	0.0010	0.1174	0.0951
B1(LH)	ZN(HL)	A1&!A2&B2&!C1&C2	0.0100	0.0010	0.1177	0.0953
B1(LH)	ZN(HL)	A1&!A2&B2&C1&!C2	0.0100	0.0010	0.1291	0.1146
B1(HL)	ZN(LH)	!A1&!A2&B2&!C1&!C2	0.0100	0.0010	0.1913	0.1309
B1(HL)	ZN(LH)	!A1&!A2&B2&!C1&C2	0.0100	0.0010	0.2293	0.1736
B1(HL)	ZN(LH)	!A1&!A2&B2&C1&!C2	0.0100	0.0010	0.2776	0.2095
B1(HL)	ZN(LH)	!A1&A2&B2&!C1&!C2	0.0100	0.0010	0.2235	0.1322
B1(HL)	ZN(LH)	!A1&A2&B2&!C1&C2	0.0100	0.0010	0.2628	0.1662
B1(HL)	ZN(LH)	!A1&A2&B2&C1&!C2	0.0100	0.0010	0.3204	0.2091
B1(HL)	ZN(LH)	A1&!A2&B2&!C1&!C2	0.0100	0.0010	0.2712	0.1675
B1(HL)	ZN(LH)	A1&!A2&B2&!C1&C2	0.0100	0.0010	0.3203	0.2092

continues on next page

Table 31 – continued from previous page

B1(HL)	ZN(LH)	A1&!A2&B2&C1&!C2	0.0100	0.0010	0.3767	0.2520
B2(HL)	ZN(LH)	!A1&!A2&B1&!C1&!C2	0.0100	0.0010	0.2223	0.1598
B2(HL)	ZN(LH)	!A1&!A2&B1&!C1&C2	0.0100	0.0010	0.2681	0.2100
B2(HL)	ZN(LH)	!A1&!A2&B1&C1&!C2	0.0100	0.0010	0.3151	0.2461
B2(HL)	ZN(LH)	!A1&A2&B1&!C1&!C2	0.0100	0.0010	0.2619	0.1680
B2(HL)	ZN(LH)	!A1&A2&B1&!C1&C2	0.0100	0.0010	0.3092	0.2097
B2(HL)	ZN(LH)	!A1&A2&B1&C1&!C2	0.0100	0.0010	0.3647	0.2525
B2(HL)	ZN(LH)	A1&!A2&B1&!C1&!C2	0.0100	0.0010	0.3084	0.2039
B2(HL)	ZN(LH)	A1&!A2&B1&!C1&C2	0.0100	0.0010	0.3647	0.2524
B2(HL)	ZN(LH)	A1&!A2&B1&C1&!C2	0.0100	0.0010	0.4202	0.2956
B2(LH)	ZN(HL)	!A1&!A2&B1&!C1&!C2	0.0100	0.0010	0.1409	0.0852
B2(LH)	ZN(HL)	!A1&!A2&B1&!C1&C2	0.0100	0.0010	0.1414	0.0849
B2(LH)	ZN(HL)	!A1&!A2&B1&C1&!C2	0.0100	0.0010	0.1512	0.1037
B2(LH)	ZN(HL)	!A1&A2&B1&!C1&!C2	0.0100	0.0010	0.1190	0.0752
B2(LH)	ZN(HL)	!A1&A2&B1&!C1&C2	0.0100	0.0010	0.1193	0.0755
B2(LH)	ZN(HL)	!A1&A2&B1&C1&!C2	0.0100	0.0010	0.1292	0.0950
B2(LH)	ZN(HL)	A1&!A2&B1&!C1&!C2	0.0100	0.0010	0.1290	0.0949
B2(LH)	ZN(HL)	A1&!A2&B1&!C1&C2	0.0100	0.0010	0.1292	0.0949
B2(LH)	ZN(HL)	A1&!A2&B1&C1&!C2	0.0100	0.0010	0.1406	0.1140
A2(HL)	ZN(LH)	A1&!B1&!B2&!C1&!C2	0.0100	0.0010	0.1427	0.1267
A2(HL)	ZN(LH)	A1&!B1&!B2&!C1&C2	0.0100	0.0010	0.1561	0.1577
A2(HL)	ZN(LH)	A1&!B1&!B2&C1&!C2	0.0100	0.0010	0.2002	0.1987
A2(HL)	ZN(LH)	A1&!B1&B2&!C1&!C2	0.0100	0.0010	0.1718	0.1630
A2(HL)	ZN(LH)	A1&!B1&B2&!C1&C2	0.0100	0.0010	0.1870	0.1978
A2(HL)	ZN(LH)	A1&!B1&B2&C1&!C2	0.0100	0.0010	0.2412	0.2454
A2(HL)	ZN(LH)	A1&B1&!B2&!C1&!C2	0.0100	0.0010	0.2181	0.2012
A2(HL)	ZN(LH)	A1&B1&!B2&!C1&C2	0.0100	0.0010	0.2414	0.2456
A2(HL)	ZN(LH)	A1&B1&!B2&C1&!C2	0.0100	0.0010	0.2965	0.2915
A2(LH)	ZN(HL)	A1&!B1&!B2&!C1&!C2	0.0100	0.0010	0.0845	0.0459
A2(LH)	ZN(HL)	A1&!B1&!B2&!C1&C2	0.0100	0.0010	0.0845	0.0459
A2(LH)	ZN(HL)	A1&!B1&!B2&C1&!C2	0.0100	0.0010	0.0901	0.0624
A2(LH)	ZN(HL)	A1&!B1&B2&!C1&!C2	0.0100	0.0010	0.0847	0.0459
A2(LH)	ZN(HL)	A1&!B1&B2&!C1&C2	0.0100	0.0010	0.0847	0.0459
A2(LH)	ZN(HL)	A1&!B1&B2&C1&!C2	0.0100	0.0010	0.0902	0.0624
A2(LH)	ZN(HL)	A1&B1&!B2&!C1&!C2	0.0100	0.0010	0.0903	0.0625
A2(LH)	ZN(HL)	A1&B1&!B2&!C1&C2	0.0100	0.0010	0.0903	0.0624
A2(LH)	ZN(HL)	A1&B1&!B2&C1&!C2	0.0100	0.0010	0.0979	0.0793
A1(HL)	ZN(LH)	A2&!B1&!B2&!C1&!C2	0.0100	0.0010	0.1135	0.0963
A1(HL)	ZN(LH)	A2&!B1&!B2&!C1&C2	0.0100	0.0010	0.1217	0.1176
A1(HL)	ZN(LH)	A2&!B1&!B2&C1&!C2	0.0100	0.0010	0.1652	0.1597
A1(HL)	ZN(LH)	A2&!B1&B2&!C1&!C2	0.0100	0.0010	0.1351	0.1248
A1(HL)	ZN(LH)	A2&!B1&B2&!C1&C2	0.0100	0.0010	0.1441	0.1498
A1(HL)	ZN(LH)	A2&!B1&B2&C1&!C2	0.0100	0.0010	0.1981	0.1993
A1(HL)	ZN(LH)	A2&B1&!B2&!C1&!C2	0.0100	0.0010	0.1814	0.1639
A1(HL)	ZN(LH)	A2&B1&!B2&!C1&C2	0.0100	0.0010	0.1983	0.1993
A1(HL)	ZN(LH)	A2&B1&!B2&C1&!C2	0.0100	0.0010	0.2538	0.2466
A1(LH)	ZN(HL)	A2&!B1&!B2&!C1&!C2	0.0100	0.0010	0.0731	0.0460
A1(LH)	ZN(HL)	A2&!B1&!B2&!C1&C2	0.0100	0.0010	0.0731	0.0460
A1(LH)	ZN(HL)	A2&!B1&!B2&C1&!C2	0.0100	0.0010	0.0786	0.0623
A1(LH)	ZN(HL)	A2&!B1&B2&!C1&!C2	0.0100	0.0010	0.0733	0.0460
A1(LH)	ZN(HL)	A2&!B1&B2&!C1&C2	0.0100	0.0010	0.0733	0.0460
A1(LH)	ZN(HL)	A2&!B1&B2&C1&!C2	0.0100	0.0010	0.0787	0.0624

continues on next page

Table 31 – continued from previous page

A1(LH)	ZN(HL)	A2&B1&!B2&!C1&!C2	0.0100	0.0010	0.0788	0.0624
A1(LH)	ZN(HL)	A2&B1&!B2&!C1&C2	0.0100	0.0010	0.0788	0.0624
A1(LH)	ZN(HL)	A2&B1&!B2&C1&!C2	0.0100	0.0010	0.0864	0.0793

DYNAMIC ENERGY

Input Pin	When Condition	Tin (ns)	Output	Out Load (pf)	Energy (uW/MHz)
A1	A2&!B1&!B2&!C1&!C2	0.0100	ZN(LH)	0.0010	0.6808
A1	A2&!B1&!B2&!C1&C2	0.0100	ZN(LH)	0.0010	0.6815
A1	A2&!B1&!B2&C1&!C2	0.0100	ZN(LH)	0.0010	0.8499
A1	A2&!B1&B2&!C1&!C2	0.0100	ZN(LH)	0.0010	0.6806
A1	A2&!B1&B2&!C1&C2	0.0100	ZN(LH)	0.0010	0.6809
A1	A2&!B1&B2&C1&!C2	0.0100	ZN(LH)	0.0010	0.8494
A1	A2&B1&!B2&!C1&!C2	0.0100	ZN(LH)	0.0010	0.8500
A1	A2&B1&!B2&!C1&C2	0.0100	ZN(LH)	0.0010	0.8503
A1	A2&B1&!B2&C1&!C2	0.0100	ZN(LH)	0.0010	1.0174
B2	!A1&!A2&B1&!C1&!C2	0.0100	ZN(LH)	0.0010	1.1563
B2	!A1&!A2&B1&!C1&C2	0.0100	ZN(LH)	0.0010	1.1561
B2	!A1&!A2&B1&C1&!C2	0.0100	ZN(LH)	0.0010	1.3214
B2	!A1&A2&B1&!C1&!C2	0.0100	ZN(LH)	0.0010	1.0683
B2	!A1&A2&B1&!C1&C2	0.0100	ZN(LH)	0.0010	1.0681
B2	!A1&A2&B1&C1&!C2	0.0100	ZN(LH)	0.0010	1.2333
B2	A1&!A2&B1&!C1&!C2	0.0100	ZN(LH)	0.0010	1.2333
B2	A1&!A2&B1&!C1&C2	0.0100	ZN(LH)	0.0010	1.2332
B2	A1&!A2&B1&C1&!C2	0.0100	ZN(LH)	0.0010	1.3981
B1	!A1&!A2&B2&!C1&!C2	0.0100	ZN(HL)	0.0010	0.2260
B1	!A1&!A2&B2&!C1&C2	0.0100	ZN(HL)	0.0010	0.2279
B1	!A1&!A2&B2&C1&!C2	0.0100	ZN(HL)	0.0010	0.2283
B1	!A1&A2&B2&!C1&!C2	0.0100	ZN(HL)	0.0010	0.2000
B1	!A1&A2&B2&!C1&C2	0.0100	ZN(HL)	0.0010	0.2020
B1	!A1&A2&B2&C1&!C2	0.0100	ZN(HL)	0.0010	0.2022
B1	A1&!A2&B2&!C1&!C2	0.0100	ZN(HL)	0.0010	0.2002
B1	A1&!A2&B2&!C1&C2	0.0100	ZN(HL)	0.0010	0.2023
B1	A1&!A2&B2&C1&!C2	0.0100	ZN(HL)	0.0010	0.2023
A2	A1&!B1&!B2&!C1&!C2	0.0100	ZN(LH)	0.0010	0.8246
A2	A1&!B1&!B2&!C1&C2	0.0100	ZN(LH)	0.0010	0.8251
A2	A1&!B1&!B2&C1&!C2	0.0100	ZN(LH)	0.0010	0.9905
A2	A1&!B1&B2&!C1&!C2	0.0100	ZN(LH)	0.0010	0.8246
A2	A1&!B1&B2&!C1&C2	0.0100	ZN(LH)	0.0010	0.8247
A2	A1&!B1&B2&C1&!C2	0.0100	ZN(LH)	0.0010	0.9900
A2	A1&B1&!B2&!C1&!C2	0.0100	ZN(LH)	0.0010	0.9904
A2	A1&B1&!B2&!C1&C2	0.0100	ZN(LH)	0.0010	0.9908
A2	A1&B1&!B2&C1&!C2	0.0100	ZN(LH)	0.0010	1.1562
B1	!A1&!A2&B2&!C1&!C2	0.0100	ZN(LH)	0.0010	1.0112
B1	!A1&!A2&B2&!C1&C2	0.0100	ZN(LH)	0.0010	1.0108
B1	!A1&!A2&B2&C1&!C2	0.0100	ZN(LH)	0.0010	1.1797
B1	!A1&A2&B2&!C1&!C2	0.0100	ZN(LH)	0.0010	0.9224

continues on next page

Table 32 – continued from previous page

B1	!A1&A2&B2&!C1&C2	0.0100	ZN(LH)	0.0010	0.9223
B1	!A1&A2&B2&C1&!C2	0.0100	ZN(LH)	0.0010	1.0912
B1	A1&!A2&B2&!C1&!C2	0.0100	ZN(LH)	0.0010	1.0915
B1	A1&!A2&B2&!C1&C2	0.0100	ZN(LH)	0.0010	1.0913
B1	A1&!A2&B2&C1&!C2	0.0100	ZN(LH)	0.0010	1.2582
C1	!A1&!A2&!B1&!B2&C2	0.0100	ZN(HL)	0.0010	0.4145
C1	!A1&!A2&!B1&B2&C2	0.0100	ZN(HL)	0.0010	0.3886
C1	!A1&!A2&B1&!B2&C2	0.0100	ZN(HL)	0.0010	0.3889
C1	!A1&A2&!B1&!B2&C2	0.0100	ZN(HL)	0.0010	0.3892
C1	!A1&A2&!B1&B2&C2	0.0100	ZN(HL)	0.0010	0.3634
C1	!A1&A2&B1&!B2&C2	0.0100	ZN(HL)	0.0010	0.3637
C1	A1&!A2&!B1&!B2&C2	0.0100	ZN(HL)	0.0010	0.3893
C1	A1&!A2&!B1&B2&C2	0.0100	ZN(HL)	0.0010	0.3637
C1	A1&!A2&B1&!B2&C2	0.0100	ZN(HL)	0.0010	0.3635
A2	A1&!B1&!B2&!C1&!C2	0.0100	ZN(HL)	0.0010	0.0152
A2	A1&!B1&!B2&!C1&C2	0.0100	ZN(HL)	0.0010	0.0152
A2	A1&!B1&!B2&C1&!C2	0.0100	ZN(HL)	0.0010	0.0153
A2	A1&!B1&B2&!C1&!C2	0.0100	ZN(HL)	0.0010	0.0165
A2	A1&!B1&B2&!C1&C2	0.0100	ZN(HL)	0.0010	0.0165
A2	A1&!B1&B2&C1&!C2	0.0100	ZN(HL)	0.0010	0.0166
A2	A1&B1&!B2&!C1&!C2	0.0100	ZN(HL)	0.0010	0.0166
A2	A1&B1&!B2&!C1&C2	0.0100	ZN(HL)	0.0010	0.0166
A2	A1&B1&!B2&C1&!C2	0.0100	ZN(HL)	0.0010	0.0166
C2	!A1&!A2&!B1&!B2&C1	0.0100	ZN(HL)	0.0010	0.4145
C2	!A1&!A2&!B1&B2&C1	0.0100	ZN(HL)	0.0010	0.3885
C2	!A1&!A2&B1&!B2&C1	0.0100	ZN(HL)	0.0010	0.3886
C2	!A1&A2&!B1&!B2&C1	0.0100	ZN(HL)	0.0010	0.3891
C2	!A1&A2&!B1&B2&C1	0.0100	ZN(HL)	0.0010	0.3633
C2	!A1&A2&B1&!B2&C1	0.0100	ZN(HL)	0.0010	0.3635
C2	A1&!A2&!B1&!B2&C1	0.0100	ZN(HL)	0.0010	0.3892
C2	A1&!A2&!B1&B2&C1	0.0100	ZN(HL)	0.0010	0.3635
C2	A1&!A2&B1&!B2&C1	0.0100	ZN(HL)	0.0010	0.3634
C1	!A1&!A2&!B1&!B2&C2	0.0100	ZN(LH)	0.0010	1.3198
C1	!A1&!A2&!B1&B2&C2	0.0100	ZN(LH)	0.0010	1.2334
C1	!A1&!A2&B1&!B2&C2	0.0100	ZN(LH)	0.0010	1.4035
C1	!A1&A2&!B1&!B2&C2	0.0100	ZN(LH)	0.0010	1.2313
C1	!A1&A2&!B1&B2&C2	0.0100	ZN(LH)	0.0010	1.1449
C1	!A1&A2&B1&!B2&C2	0.0100	ZN(LH)	0.0010	1.3154
C1	A1&!A2&!B1&!B2&C2	0.0100	ZN(LH)	0.0010	1.4005
C1	A1&!A2&!B1&B2&C2	0.0100	ZN(LH)	0.0010	1.3142
C1	A1&!A2&B1&!B2&C2	0.0100	ZN(LH)	0.0010	1.4822
C2	!A1&!A2&!B1&!B2&C1	0.0100	ZN(LH)	0.0010	1.4657
C2	!A1&!A2&!B1&B2&C1	0.0100	ZN(LH)	0.0010	1.3789
C2	!A1&!A2&B1&!B2&C1	0.0100	ZN(LH)	0.0010	1.5450
C2	!A1&A2&!B1&!B2&C1	0.0100	ZN(LH)	0.0010	1.3772
C2	!A1&A2&!B1&B2&C1	0.0100	ZN(LH)	0.0010	1.2908
C2	!A1&A2&B1&!B2&C1	0.0100	ZN(LH)	0.0010	1.4567
C2	A1&!A2&!B1&!B2&C1	0.0100	ZN(LH)	0.0010	1.5423
C2	A1&!A2&!B1&B2&C1	0.0100	ZN(LH)	0.0010	1.4557
C2	A1&!A2&B1&!B2&C1	0.0100	ZN(LH)	0.0010	1.6216
A1	A2&!B1&!B2&!C1&!C2	0.0100	ZN(HL)	0.0010	0.0153
A1	A2&!B1&!B2&!C1&C2	0.0100	ZN(HL)	0.0010	0.0153

continues on next page

Table 32 – continued from previous page

A1	A2&!B1&!B2&C1&!C2	0.0100	ZN(HL)	0.0010	0.0151
A1	A2&!B1&B2&!C1&!C2	0.0100	ZN(HL)	0.0010	0.0167
A1	A2&!B1&B2&!C1&C2	0.0100	ZN(HL)	0.0010	0.0167
A1	A2&!B1&B2&C1&!C2	0.0100	ZN(HL)	0.0010	0.0166
A1	A2&B1&!B2&!C1&!C2	0.0100	ZN(HL)	0.0010	0.0166
A1	A2&B1&!B2&!C1&C2	0.0100	ZN(HL)	0.0010	0.0166
A1	A2&B1&!B2&C1&!C2	0.0100	ZN(HL)	0.0010	0.0166
B2	!A1&!A2&B1&!C1&!C2	0.0100	ZN(HL)	0.0010	0.2261
B2	!A1&!A2&B1&!C1&C2	0.0100	ZN(HL)	0.0010	0.2277
B2	!A1&!A2&B1&C1&!C2	0.0100	ZN(HL)	0.0010	0.2281
B2	!A1&A2&B1&!C1&!C2	0.0100	ZN(HL)	0.0010	0.2002
B2	!A1&A2&B1&!C1&C2	0.0100	ZN(HL)	0.0010	0.2017
B2	!A1&A2&B1&C1&!C2	0.0100	ZN(HL)	0.0010	0.2020
B2	A1&!A2&B1&!C1&!C2	0.0100	ZN(HL)	0.0010	0.2004
B2	A1&!A2&B1&!C1&C2	0.0100	ZN(HL)	0.0010	0.2021
B2	A1&!A2&B1&C1&!C2	0.0100	ZN(HL)	0.0010	0.2019
B2(LH)	!A1&!A2&!B1&!C1&!C2	0.0100	n/a	n/a	-0.1579
B2(LH)	!A1&!A2&!B1&!C1&C2	0.0100	n/a	n/a	-0.1578
B2(LH)	!A1&!A2&!B1&C1&!C2	0.0100	n/a	n/a	-0.1578
B2(LH)	!A1&A2&!B1&!C1&!C2	0.0100	n/a	n/a	-0.1577
B2(LH)	!A1&A2&!B1&!C1&C2	0.0100	n/a	n/a	-0.1577
B2(LH)	!A1&A2&!B1&C1&!C2	0.0100	n/a	n/a	-0.1577
B2(LH)	A1&!A2&!B1&!C1&!C2	0.0100	n/a	n/a	-0.1577
B2(LH)	A1&!A2&!B1&!C1&C2	0.0100	n/a	n/a	-0.1577
B2(LH)	A1&!A2&!B1&C1&!C2	0.0100	n/a	n/a	-0.1577
B2(LH)	!A1&!A2&!B1&C1&C2	0.0100	n/a	n/a	-0.0454
B2(LH)	!A1&!A2&B1&C1&C2	0.0100	n/a	n/a	-0.0468
B2(LH)	!A1&A2&!B1&C1&C2	0.0100	n/a	n/a	-0.0456
B2(LH)	!A1&A2&B1&C1&C2	0.0100	n/a	n/a	-0.0470
B2(LH)	A1&!A2&!B1&C1&C2	0.0100	n/a	n/a	-0.0456
B2(LH)	A1&!A2&B1&C1&C2	0.0100	n/a	n/a	-0.0470
B2(LH)	A1&A2&!B1&!C1&!C2	0.0100	n/a	n/a	-0.1576
B2(LH)	A1&A2&!B1&!C1&C2	0.0100	n/a	n/a	-0.1576
B2(LH)	A1&A2&!B1&C1&!C2	0.0100	n/a	n/a	-0.1576
B2(LH)	A1&A2&!B1&C1&C2	0.0100	n/a	n/a	-0.0851
B2(LH)	A1&A2&B1&!C1&!C2	0.0100	n/a	n/a	-0.1219
B2(LH)	A1&A2&B1&!C1&C2	0.0100	n/a	n/a	-0.1208
B2(LH)	A1&A2&B1&C1&!C2	0.0100	n/a	n/a	-0.1208
B2(LH)	A1&A2&B1&C1&C2	0.0100	n/a	n/a	-0.0889
C2(HL)	!A1&!A2&!B1&!B2&!C1	0.0100	n/a	n/a	0.1747
C2(HL)	!A1&!A2&!B1&B2&!C1	0.0100	n/a	n/a	0.1748
C2(HL)	!A1&!A2&B1&!B2&!C1	0.0100	n/a	n/a	0.1748
C2(HL)	!A1&A2&!B1&!B2&!C1	0.0100	n/a	n/a	0.1747
C2(HL)	!A1&A2&!B1&B2&!C1	0.0100	n/a	n/a	0.1748
C2(HL)	!A1&A2&B1&!B2&!C1	0.0100	n/a	n/a	0.1748
C2(HL)	A1&!A2&!B1&!B2&!C1	0.0100	n/a	n/a	0.1747
C2(HL)	A1&!A2&!B1&B2&!C1	0.0100	n/a	n/a	0.1748
C2(HL)	A1&!A2&B1&!B2&!C1	0.0100	n/a	n/a	0.1748
C2(HL)	!A1&!A2&B1&B2&!C1	0.0100	n/a	n/a	0.1577
C2(HL)	!A1&!A2&B1&B2&C1	0.0100	n/a	n/a	0.1574
C2(HL)	!A1&A2&B1&B2&!C1	0.0100	n/a	n/a	0.1577
C2(HL)	!A1&A2&B1&B2&C1	0.0100	n/a	n/a	0.1574

continues on next page

Table 32 – continued from previous page

C2(HL)	A1&!A2&B1&B2&!C1	0.0100	n/a	n/a	0.1577
C2(HL)	A1&!A2&B1&B2&C1	0.0100	n/a	n/a	0.1574
C2(HL)	A1&A2&!B1&!B2&!C1	0.0100	n/a	n/a	0.1576
C2(HL)	A1&A2&!B1&!B2&C1	0.0100	n/a	n/a	0.1576
C2(HL)	A1&A2&!B1&B2&!C1	0.0100	n/a	n/a	0.1577
C2(HL)	A1&A2&!B1&B2&C1	0.0100	n/a	n/a	0.1574
C2(HL)	A1&A2&B1&!B2&!C1	0.0100	n/a	n/a	0.1576
C2(HL)	A1&A2&B1&!B2&C1	0.0100	n/a	n/a	0.1574
C2(HL)	A1&A2&B1&B2&!C1	0.0100	n/a	n/a	0.1577
C2(HL)	A1&A2&B1&B2&C1	0.0100	n/a	n/a	0.1574
B2(HL)	!A1&!A2&!B1&!C1&!C2	0.0100	n/a	n/a	0.1750
B2(HL)	!A1&!A2&!B1&!C1&C2	0.0100	n/a	n/a	0.1746
B2(HL)	!A1&!A2&!B1&C1&!C2	0.0100	n/a	n/a	0.1746
B2(HL)	!A1&A2&!B1&!C1&!C2	0.0100	n/a	n/a	0.1751
B2(HL)	!A1&A2&!B1&!C1&C2	0.0100	n/a	n/a	0.1747
B2(HL)	!A1&A2&!B1&C1&!C2	0.0100	n/a	n/a	0.1747
B2(HL)	A1&!A2&!B1&!C1&!C2	0.0100	n/a	n/a	0.1751
B2(HL)	A1&!A2&!B1&!C1&C2	0.0100	n/a	n/a	0.1747
B2(HL)	A1&!A2&!B1&C1&!C2	0.0100	n/a	n/a	0.1747
B2(HL)	!A1&!A2&!B1&C1&C2	0.0100	n/a	n/a	0.0490
B2(HL)	!A1&!A2&B1&C1&C2	0.0100	n/a	n/a	0.1679
B2(HL)	!A1&A2&!B1&C1&C2	0.0100	n/a	n/a	0.0492
B2(HL)	!A1&A2&B1&C1&C2	0.0100	n/a	n/a	0.1672
B2(HL)	A1&!A2&!B1&C1&C2	0.0100	n/a	n/a	0.0492
B2(HL)	A1&!A2&B1&C1&C2	0.0100	n/a	n/a	0.1672
B2(HL)	A1&A2&!B1&!C1&!C2	0.0100	n/a	n/a	0.1581
B2(HL)	A1&A2&!B1&!C1&C2	0.0100	n/a	n/a	0.1579
B2(HL)	A1&A2&!B1&C1&!C2	0.0100	n/a	n/a	0.1578
B2(HL)	A1&A2&!B1&C1&C2	0.0100	n/a	n/a	0.0811
B2(HL)	A1&A2&B1&!C1&!C2	0.0100	n/a	n/a	0.1579
B2(HL)	A1&A2&B1&!C1&C2	0.0100	n/a	n/a	0.1577
B2(HL)	A1&A2&B1&C1&!C2	0.0100	n/a	n/a	0.1577
B2(HL)	A1&A2&B1&C1&C2	0.0100	n/a	n/a	0.0857
C2(LH)	!A1&!A2&!B1&!B2&!C1	0.0100	n/a	n/a	-0.1572
C2(LH)	!A1&!A2&!B1&B2&!C1	0.0100	n/a	n/a	-0.1572
C2(LH)	!A1&!A2&B1&!B2&!C1	0.0100	n/a	n/a	-0.1572
C2(LH)	!A1&A2&!B1&!B2&!C1	0.0100	n/a	n/a	-0.1571
C2(LH)	!A1&A2&!B1&B2&!C1	0.0100	n/a	n/a	-0.1571
C2(LH)	!A1&A2&B1&!B2&!C1	0.0100	n/a	n/a	-0.1571
C2(LH)	A1&!A2&!B1&!B2&!C1	0.0100	n/a	n/a	-0.1571
C2(LH)	A1&!A2&!B1&B2&!C1	0.0100	n/a	n/a	-0.1572
C2(LH)	A1&!A2&B1&!B2&!C1	0.0100	n/a	n/a	-0.1571
C2(LH)	!A1&!A2&B1&B2&!C1	0.0100	n/a	n/a	-0.1569
C2(LH)	!A1&!A2&B1&B2&C1	0.0100	n/a	n/a	-0.1310
C2(LH)	!A1&A2&B1&B2&!C1	0.0100	n/a	n/a	-0.1569
C2(LH)	!A1&A2&B1&B2&C1	0.0100	n/a	n/a	-0.1311
C2(LH)	A1&!A2&B1&B2&!C1	0.0100	n/a	n/a	-0.1568
C2(LH)	A1&!A2&B1&B2&C1	0.0100	n/a	n/a	-0.1311
C2(LH)	A1&A2&!B1&!B2&!C1	0.0100	n/a	n/a	-0.1570
C2(LH)	A1&A2&!B1&!B2&C1	0.0100	n/a	n/a	-0.1235
C2(LH)	A1&A2&!B1&B2&!C1	0.0100	n/a	n/a	-0.1570
C2(LH)	A1&A2&!B1&B2&C1	0.0100	n/a	n/a	-0.1263

continues on next page

Table 32 – continued from previous page

C2(LH)	A1&A2&B1&!B2&!C1	0.0100	n/a	n/a	-0.1569
C2(LH)	A1&A2&B1&!B2&C1	0.0100	n/a	n/a	-0.1263
C2(LH)	A1&A2&B1&B2&!C1	0.0100	n/a	n/a	-0.1568
C2(LH)	A1&A2&B1&B2&C1	0.0100	n/a	n/a	-0.1342
A2(LH)	!A1&!B1&!B2&!C1&!C2	0.0100	n/a	n/a	-0.1584
A2(LH)	!A1&!B1&!B2&!C1&C2	0.0100	n/a	n/a	-0.1584
A2(LH)	!A1&!B1&!B2&C1&!C2	0.0100	n/a	n/a	-0.1584
A2(LH)	!A1&!B1&B2&!C1&!C2	0.0100	n/a	n/a	-0.1583
A2(LH)	!A1&!B1&B2&!C1&C2	0.0100	n/a	n/a	-0.1582
A2(LH)	!A1&!B1&B2&C1&!C2	0.0100	n/a	n/a	-0.1582
A2(LH)	!A1&B1&!B2&!C1&!C2	0.0100	n/a	n/a	-0.1583
A2(LH)	!A1&B1&!B2&!C1&C2	0.0100	n/a	n/a	-0.1582
A2(LH)	!A1&B1&!B2&C1&!C2	0.0100	n/a	n/a	-0.1582
A2(LH)	!A1&!B1&!B2&C1&C2	0.0100	n/a	n/a	-0.0384
A2(LH)	!A1&!B1&B2&C1&C2	0.0100	n/a	n/a	-0.0383
A2(LH)	!A1&B1&!B2&C1&C2	0.0100	n/a	n/a	-0.0383
A2(LH)	!A1&B1&B2&!C1&!C2	0.0100	n/a	n/a	-0.0386
A2(LH)	!A1&B1&B2&!C1&C2	0.0100	n/a	n/a	-0.0386
A2(LH)	!A1&B1&B2&C1&!C2	0.0100	n/a	n/a	-0.0386
A2(LH)	!A1&B1&B2&C1&C2	0.0100	n/a	n/a	-0.0386
A2(LH)	A1&!B1&!B2&C1&C2	0.0100	n/a	n/a	-0.0401
A2(LH)	A1&!B1&B2&C1&C2	0.0100	n/a	n/a	-0.0402
A2(LH)	A1&B1&!B2&C1&C2	0.0100	n/a	n/a	-0.0402
A2(LH)	A1&B1&B2&!C1&!C2	0.0100	n/a	n/a	-0.0403
A2(LH)	A1&B1&B2&!C1&C2	0.0100	n/a	n/a	-0.0403
A2(LH)	A1&B1&B2&C1&!C2	0.0100	n/a	n/a	-0.0403
A2(LH)	A1&B1&B2&C1&C2	0.0100	n/a	n/a	-0.0403
A1(LH)	!A2&!B1&!B2&!C1&!C2	0.0100	n/a	n/a	-0.1173
A1(LH)	!A2&!B1&!B2&!C1&C2	0.0100	n/a	n/a	-0.1173
A1(LH)	!A2&!B1&!B2&C1&!C2	0.0100	n/a	n/a	-0.1173
A1(LH)	!A2&!B1&B2&!C1&!C2	0.0100	n/a	n/a	-0.1172
A1(LH)	!A2&!B1&B2&!C1&C2	0.0100	n/a	n/a	-0.1172
A1(LH)	!A2&!B1&B2&C1&!C2	0.0100	n/a	n/a	-0.1172
A1(LH)	!A2&B1&!B2&!C1&!C2	0.0100	n/a	n/a	-0.1172
A1(LH)	!A2&B1&!B2&!C1&C2	0.0100	n/a	n/a	-0.1172
A1(LH)	!A2&B1&!B2&C1&!C2	0.0100	n/a	n/a	-0.1172
A1(LH)	!A2&!B1&!B2&C1&C2	0.0100	n/a	n/a	-0.0384
A1(LH)	!A2&!B1&B2&C1&C2	0.0100	n/a	n/a	-0.0382
A1(LH)	!A2&B1&!B2&C1&C2	0.0100	n/a	n/a	-0.0382
A1(LH)	!A2&B1&B2&!C1&!C2	0.0100	n/a	n/a	-0.0386
A1(LH)	!A2&B1&B2&!C1&C2	0.0100	n/a	n/a	-0.0385
A1(LH)	!A2&B1&B2&C1&!C2	0.0100	n/a	n/a	-0.0385
A1(LH)	!A2&B1&B2&C1&C2	0.0100	n/a	n/a	-0.0385
A1(LH)	A2&!B1&!B2&C1&C2	0.0100	n/a	n/a	-0.0400
A1(LH)	A2&!B1&B2&C1&C2	0.0100	n/a	n/a	-0.0401
A1(LH)	A2&B1&!B2&C1&C2	0.0100	n/a	n/a	-0.0401
A1(LH)	A2&B1&B2&!C1&!C2	0.0100	n/a	n/a	-0.0402
A1(LH)	A2&B1&B2&!C1&C2	0.0100	n/a	n/a	-0.0402
A1(LH)	A2&B1&B2&C1&!C2	0.0100	n/a	n/a	-0.0402
A1(LH)	A2&B1&B2&C1&C2	0.0100	n/a	n/a	-0.0402
C1(LH)	!A1&!A2&!B1&!B2&!C2	0.0100	n/a	n/a	-0.1159
C1(LH)	!A1&!A2&!B1&B2&!C2	0.0100	n/a	n/a	-0.1159

continues on next page

Table 32 – continued from previous page

C1(LH)	!A1&!A2&B1&!B2&!C2	0.0100	n/a	n/a	-0.1159
C1(LH)	!A1&A2&!B1&!B2&!C2	0.0100	n/a	n/a	-0.1159
C1(LH)	!A1&A2&!B1&B2&!C2	0.0100	n/a	n/a	-0.1158
C1(LH)	!A1&A2&B1&!B2&!C2	0.0100	n/a	n/a	-0.1158
C1(LH)	A1&!A2&!B1&!B2&!C2	0.0100	n/a	n/a	-0.1159
C1(LH)	A1&!A2&!B1&B2&!C2	0.0100	n/a	n/a	-0.1158
C1(LH)	A1&!A2&B1&!B2&!C2	0.0100	n/a	n/a	-0.1158
C1(LH)	!A1&!A2&B1&B2&!C2	0.0100	n/a	n/a	-0.1568
C1(LH)	!A1&!A2&B1&B2&C2	0.0100	n/a	n/a	-0.1310
C1(LH)	!A1&A2&B1&B2&!C2	0.0100	n/a	n/a	-0.1568
C1(LH)	!A1&A2&B1&B2&C2	0.0100	n/a	n/a	-0.1310
C1(LH)	A1&!A2&B1&B2&!C2	0.0100	n/a	n/a	-0.1568
C1(LH)	A1&!A2&B1&B2&C2	0.0100	n/a	n/a	-0.1311
C1(LH)	A1&A2&!B1&!B2&!C2	0.0100	n/a	n/a	-0.1569
C1(LH)	A1&A2&!B1&!B2&C2	0.0100	n/a	n/a	-0.1235
C1(LH)	A1&A2&!B1&B2&!C2	0.0100	n/a	n/a	-0.1568
C1(LH)	A1&A2&!B1&B2&C2	0.0100	n/a	n/a	-0.1263
C1(LH)	A1&A2&B1&!B2&!C2	0.0100	n/a	n/a	-0.1569
C1(LH)	A1&A2&B1&!B2&C2	0.0100	n/a	n/a	-0.1263
C1(LH)	A1&A2&B1&B2&!C2	0.0100	n/a	n/a	-0.1568
C1(LH)	A1&A2&B1&B2&C2	0.0100	n/a	n/a	-0.1342
A2(HL)	!A1&!B1&!B2&!C1&!C2	0.0100	n/a	n/a	0.1748
A2(HL)	!A1&!B1&!B2&!C1&C2	0.0100	n/a	n/a	0.1746
A2(HL)	!A1&!B1&!B2&C1&!C2	0.0100	n/a	n/a	0.1746
A2(HL)	!A1&!B1&B2&!C1&!C2	0.0100	n/a	n/a	0.1745
A2(HL)	!A1&!B1&B2&!C1&C2	0.0100	n/a	n/a	0.1744
A2(HL)	!A1&!B1&B2&C1&!C2	0.0100	n/a	n/a	0.1744
A2(HL)	!A1&B1&!B2&!C1&!C2	0.0100	n/a	n/a	0.1745
A2(HL)	!A1&B1&!B2&!C1&C2	0.0100	n/a	n/a	0.1744
A2(HL)	!A1&B1&!B2&C1&!C2	0.0100	n/a	n/a	0.1744
A2(HL)	!A1&!B1&!B2&C1&C2	0.0100	n/a	n/a	0.0397
A2(HL)	!A1&!B1&B2&C1&C2	0.0100	n/a	n/a	0.0398
A2(HL)	!A1&B1&!B2&C1&C2	0.0100	n/a	n/a	0.0398
A2(HL)	!A1&B1&B2&!C1&!C2	0.0100	n/a	n/a	0.0399
A2(HL)	!A1&B1&B2&!C1&C2	0.0100	n/a	n/a	0.0399
A2(HL)	!A1&B1&B2&C1&!C2	0.0100	n/a	n/a	0.0399
A2(HL)	!A1&B1&B2&C1&C2	0.0100	n/a	n/a	0.0399
A2(HL)	A1&!B1&!B2&C1&C2	0.0100	n/a	n/a	0.3843
A2(HL)	A1&!B1&B2&C1&C2	0.0100	n/a	n/a	0.3598
A2(HL)	A1&B1&!B2&C1&C2	0.0100	n/a	n/a	0.3599
A2(HL)	A1&B1&B2&!C1&!C2	0.0100	n/a	n/a	0.1914
A2(HL)	A1&B1&B2&!C1&C2	0.0100	n/a	n/a	0.1914
A2(HL)	A1&B1&B2&C1&!C2	0.0100	n/a	n/a	0.1914
A2(HL)	A1&B1&B2&C1&C2	0.0100	n/a	n/a	0.1914
B1(HL)	!A1&!A2&!B2&!C1&!C2	0.0100	n/a	n/a	0.1761
B1(HL)	!A1&!A2&!B2&!C1&C2	0.0100	n/a	n/a	0.1756
B1(HL)	!A1&!A2&!B2&C1&!C2	0.0100	n/a	n/a	0.1756
B1(HL)	!A1&A2&!B2&!C1&!C2	0.0100	n/a	n/a	0.1761
B1(HL)	!A1&A2&!B2&!C1&C2	0.0100	n/a	n/a	0.1758
B1(HL)	!A1&A2&!B2&C1&!C2	0.0100	n/a	n/a	0.1758
B1(HL)	A1&!A2&!B2&!C1&!C2	0.0100	n/a	n/a	0.1761
B1(HL)	A1&!A2&!B2&!C1&C2	0.0100	n/a	n/a	0.1757

continues on next page

Table 32 – continued from previous page

B1(HL)	A1&!A2&!B2&C1&!C2	0.0100	n/a	n/a	0.1757
B1(HL)	!A1&!A2&!B2&C1&C2	0.0100	n/a	n/a	0.0489
B1(HL)	!A1&!A2&B2&C1&C2	0.0100	n/a	n/a	0.1677
B1(HL)	!A1&A2&!B2&C1&C2	0.0100	n/a	n/a	0.0490
B1(HL)	!A1&A2&B2&C1&C2	0.0100	n/a	n/a	0.1671
B1(HL)	A1&!A2&!B2&C1&C2	0.0100	n/a	n/a	0.0490
B1(HL)	A1&!A2&B2&C1&C2	0.0100	n/a	n/a	0.1671
B1(HL)	A1&A2&!B2&!C1&!C2	0.0100	n/a	n/a	0.1578
B1(HL)	A1&A2&!B2&!C1&C2	0.0100	n/a	n/a	0.1576
B1(HL)	A1&A2&!B2&C1&!C2	0.0100	n/a	n/a	0.1576
B1(HL)	A1&A2&!B2&C1&C2	0.0100	n/a	n/a	0.0809
B1(HL)	A1&A2&B2&!C1&!C2	0.0100	n/a	n/a	0.1577
B1(HL)	A1&A2&B2&!C1&C2	0.0100	n/a	n/a	0.1576
B1(HL)	A1&A2&B2&C1&!C2	0.0100	n/a	n/a	0.1576
B1(HL)	A1&A2&B2&C1&C2	0.0100	n/a	n/a	0.0855
C1(HL)	!A1&!A2&!B1&!B2&!C2	0.0100	n/a	n/a	0.1760
C1(HL)	!A1&!A2&!B1&B2&!C2	0.0100	n/a	n/a	0.1759
C1(HL)	!A1&!A2&B1&!B2&!C2	0.0100	n/a	n/a	0.1759
C1(HL)	!A1&A2&!B1&!B2&!C2	0.0100	n/a	n/a	0.1760
C1(HL)	!A1&A2&!B1&B2&!C2	0.0100	n/a	n/a	0.1759
C1(HL)	!A1&A2&B1&!B2&!C2	0.0100	n/a	n/a	0.1759
C1(HL)	A1&!A2&!B1&!B2&!C2	0.0100	n/a	n/a	0.1760
C1(HL)	A1&!A2&!B1&B2&!C2	0.0100	n/a	n/a	0.1759
C1(HL)	A1&!A2&B1&!B2&!C2	0.0100	n/a	n/a	0.1759
C1(HL)	!A1&!A2&B1&B2&!C2	0.0100	n/a	n/a	0.1575
C1(HL)	!A1&!A2&B1&B2&C2	0.0100	n/a	n/a	0.1575
C1(HL)	!A1&A2&B1&B2&!C2	0.0100	n/a	n/a	0.1574
C1(HL)	!A1&A2&B1&B2&C2	0.0100	n/a	n/a	0.1574
C1(HL)	A1&!A2&B1&B2&!C2	0.0100	n/a	n/a	0.1574
C1(HL)	A1&!A2&B1&B2&C2	0.0100	n/a	n/a	0.1575
C1(HL)	A1&A2&!B1&!B2&!C2	0.0100	n/a	n/a	0.1574
C1(HL)	A1&A2&!B1&!B2&C2	0.0100	n/a	n/a	0.1574
C1(HL)	A1&A2&!B1&B2&!C2	0.0100	n/a	n/a	0.1574
C1(HL)	A1&A2&!B1&B2&C2	0.0100	n/a	n/a	0.1575
C1(HL)	A1&A2&B1&!B2&!C2	0.0100	n/a	n/a	0.1575
C1(HL)	A1&A2&B1&!B2&C2	0.0100	n/a	n/a	0.1575
C1(HL)	A1&A2&B1&B2&!C2	0.0100	n/a	n/a	0.1574
C1(HL)	A1&A2&B1&B2&C2	0.0100	n/a	n/a	0.1574
A1(HL)	!A2&!B1&!B2&!C1&!C2	0.0100	n/a	n/a	0.1764
A1(HL)	!A2&!B1&!B2&!C1&C2	0.0100	n/a	n/a	0.1764
A1(HL)	!A2&!B1&!B2&C1&!C2	0.0100	n/a	n/a	0.1764
A1(HL)	!A2&!B1&B2&!C1&!C2	0.0100	n/a	n/a	0.1761
A1(HL)	!A2&!B1&B2&!C1&C2	0.0100	n/a	n/a	0.1761
A1(HL)	!A2&!B1&B2&C1&!C2	0.0100	n/a	n/a	0.1760
A1(HL)	!A2&B1&!B2&!C1&!C2	0.0100	n/a	n/a	0.1761
A1(HL)	!A2&B1&!B2&!C1&C2	0.0100	n/a	n/a	0.1760
A1(HL)	!A2&B1&!B2&C1&!C2	0.0100	n/a	n/a	0.1760
A1(HL)	!A2&!B1&!B2&C1&C2	0.0100	n/a	n/a	0.0397
A1(HL)	!A2&!B1&B2&C1&C2	0.0100	n/a	n/a	0.0398
A1(HL)	!A2&B1&!B2&C1&C2	0.0100	n/a	n/a	0.0398
A1(HL)	!A2&B1&B2&!C1&!C2	0.0100	n/a	n/a	0.0399
A1(HL)	!A2&B1&B2&!C1&C2	0.0100	n/a	n/a	0.0399

continues on next page

Table 32 – continued from previous page

A1(HL)	!A2&B1&B2&C1&!C2	0.0100	n/a	n/a	0.0399
A1(HL)	!A2&B1&B2&C1&C2	0.0100	n/a	n/a	0.0398
A1(HL)	A2&!B1&!B2&C1&C2	0.0100	n/a	n/a	0.3840
A1(HL)	A2&!B1&B2&C1&C2	0.0100	n/a	n/a	0.3596
A1(HL)	A2&B1&!B2&C1&C2	0.0100	n/a	n/a	0.3598
A1(HL)	A2&B1&B2&!C1&!C2	0.0100	n/a	n/a	0.1913
A1(HL)	A2&B1&B2&!C1&C2	0.0100	n/a	n/a	0.1913
A1(HL)	A2&B1&B2&C1&!C2	0.0100	n/a	n/a	0.1914
A1(HL)	A2&B1&B2&C1&C2	0.0100	n/a	n/a	0.1913
B1(LH)	!A1&!A2&!B2&!C1&!C2	0.0100	n/a	n/a	-0.1157
B1(LH)	!A1&!A2&!B2&!C1&C2	0.0100	n/a	n/a	-0.1158
B1(LH)	!A1&!A2&!B2&C1&!C2	0.0100	n/a	n/a	-0.1158
B1(LH)	!A1&A2&!B2&!C1&!C2	0.0100	n/a	n/a	-0.1156
B1(LH)	!A1&A2&!B2&!C1&C2	0.0100	n/a	n/a	-0.1158
B1(LH)	!A1&A2&!B2&C1&!C2	0.0100	n/a	n/a	-0.1158
B1(LH)	A1&!A2&!B2&!C1&!C2	0.0100	n/a	n/a	-0.1157
B1(LH)	A1&!A2&!B2&!C1&C2	0.0100	n/a	n/a	-0.1158
B1(LH)	A1&!A2&!B2&C1&!C2	0.0100	n/a	n/a	-0.1158
B1(LH)	!A1&!A2&!B2&C1&C2	0.0100	n/a	n/a	-0.0453
B1(LH)	!A1&!A2&B2&C1&C2	0.0100	n/a	n/a	-0.0468
B1(LH)	!A1&A2&!B2&C1&C2	0.0100	n/a	n/a	-0.0455
B1(LH)	!A1&A2&B2&C1&C2	0.0100	n/a	n/a	-0.0469
B1(LH)	A1&!A2&!B2&C1&C2	0.0100	n/a	n/a	-0.0455
B1(LH)	A1&!A2&B2&C1&C2	0.0100	n/a	n/a	-0.0470
B1(LH)	A1&A2&!B2&!C1&!C2	0.0100	n/a	n/a	-0.1576
B1(LH)	A1&A2&!B2&!C1&C2	0.0100	n/a	n/a	-0.1575
B1(LH)	A1&A2&!B2&C1&!C2	0.0100	n/a	n/a	-0.1575
B1(LH)	A1&A2&!B2&C1&C2	0.0100	n/a	n/a	-0.0850
B1(LH)	A1&A2&B2&!C1&!C2	0.0100	n/a	n/a	-0.1219
B1(LH)	A1&A2&B2&!C1&C2	0.0100	n/a	n/a	-0.1208
B1(LH)	A1&A2&B2&C1&!C2	0.0100	n/a	n/a	-0.1208
B1(LH)	A1&A2&B2&C1&C2	0.0100	n/a	n/a	-0.0889

LEAKAGE POWER

When Condition	Power (nW)
!A1&!A2&!B1&!B2&!C1&!C2	0.3526
!A1&!A2&!B1&!B2&!C1&C2	0.3535
!A1&!A2&!B1&!B2&C1&!C2	0.5132
!A1&!A2&!B1&B2&!C1&!C2	0.3535
!A1&!A2&!B1&B2&!C1&C2	0.3545
!A1&!A2&!B1&B2&C1&!C2	0.5141
!A1&!A2&B1&!B2&!C1&!C2	0.5132
!A1&!A2&B1&!B2&!C1&C2	0.5141
!A1&!A2&B1&!B2&C1&!C2	0.6737
!A1&A2&!B1&!B2&!C1&!C2	0.3535
!A1&A2&!B1&!B2&!C1&C2	0.3545

continues on next page

Table 33 – continued from previous page

!A1&A2&!B1&!B2&C1&!C2	0.5141
!A1&A2&!B1&B2&!C1&!C2	0.3545
!A1&A2&!B1&B2&!C1&C2	0.3554
!A1&A2&!B1&B2&C1&!C2	0.5150
!A1&A2&B1&!B2&!C1&!C2	0.5141
!A1&A2&B1&!B2&!C1&C2	0.5150
!A1&A2&B1&!B2&C1&!C2	0.6746
A1&!A2&!B1&!B2&!C1&!C2	0.5132
A1&!A2&!B1&!B2&!C1&C2	0.5141
A1&!A2&!B1&!B2&C1&!C2	0.6737
A1&!A2&!B1&B2&!C1&!C2	0.5141
A1&!A2&!B1&B2&!C1&C2	0.5150
A1&!A2&!B1&B2&C1&!C2	0.6746
A1&!A2&B1&!B2&!C1&!C2	0.6737
A1&!A2&B1&!B2&!C1&C2	0.6746
A1&!A2&B1&!B2&C1&!C2	0.8342
!A1&!A2&!B1&!B2&C1&C2	0.8297
!A1&!A2&!B1&B2&C1&C2	0.8369
!A1&!A2&B1&!B2&C1&C2	0.8369
!A1&!A2&B1&B2&!C1&!C2	0.5470
!A1&!A2&B1&B2&!C1&C2	0.5470
!A1&!A2&B1&B2&C1&!C2	0.5470
!A1&!A2&B1&B2&C1&C2	0.5470
!A1&A2&!B1&!B2&C1&C2	0.8379
!A1&A2&!B1&B2&C1&C2	0.8452
!A1&A2&B1&!B2&C1&C2	0.8452
!A1&A2&B1&B2&!C1&!C2	0.5557
!A1&A2&B1&B2&!C1&C2	0.5557
!A1&A2&B1&B2&C1&!C2	0.5557
!A1&A2&B1&B2&C1&C2	0.5557
A1&!A2&!B1&!B2&C1&C2	0.8379
A1&!A2&!B1&B2&C1&C2	0.8452
A1&!A2&B1&!B2&C1&C2	0.8452
A1&!A2&B1&B2&!C1&!C2	0.5557
A1&!A2&B1&B2&!C1&C2	0.5557
A1&!A2&B1&B2&C1&!C2	0.5557
A1&!A2&B1&B2&C1&C2	0.5557
A1&A2&!B1&!B2&!C1&!C2	0.2620
A1&A2&!B1&!B2&!C1&C2	0.2620
A1&A2&!B1&!B2&C1&!C2	0.2620
A1&A2&!B1&!B2&C1&C2	0.2620
A1&A2&!B1&B2&!C1&!C2	0.2620
A1&A2&!B1&B2&!C1&C2	0.2620
A1&A2&!B1&B2&C1&!C2	0.2620
A1&A2&!B1&B2&C1&C2	0.2620
A1&A2&B1&!B2&!C1&!C2	0.2620
A1&A2&B1&!B2&!C1&C2	0.2620
A1&A2&B1&!B2&C1&!C2	0.2620
A1&A2&B1&!B2&C1&C2	0.2620
A1&A2&B1&B2&!C1&!C2	0.2620
A1&A2&B1&B2&!C1&C2	0.2620
A1&A2&B1&B2&C1&!C2	0.2620

continues on next page

Table 33 – continued from previous page

A1&A2&B1&B2&C1&C2	0.2620

gf180mcu_fd_sc_mcu7t5v0__buf_1

gf180mcu_fd_sc_mcu7t5v0__buf_1 symbol

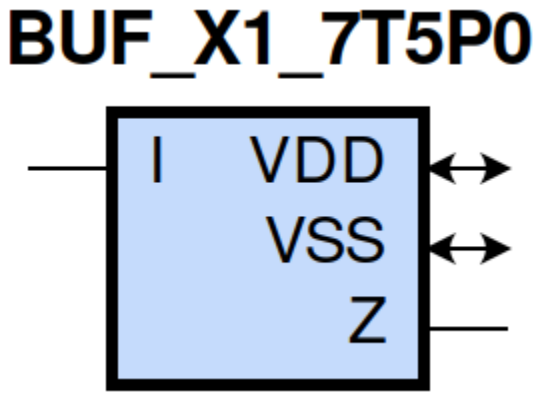

gf180mcu_fd_sc_mcu7t5v0__buf_1 schematic

gf180mcu_fd_sc_mcu7t5v0__buf_1 layout

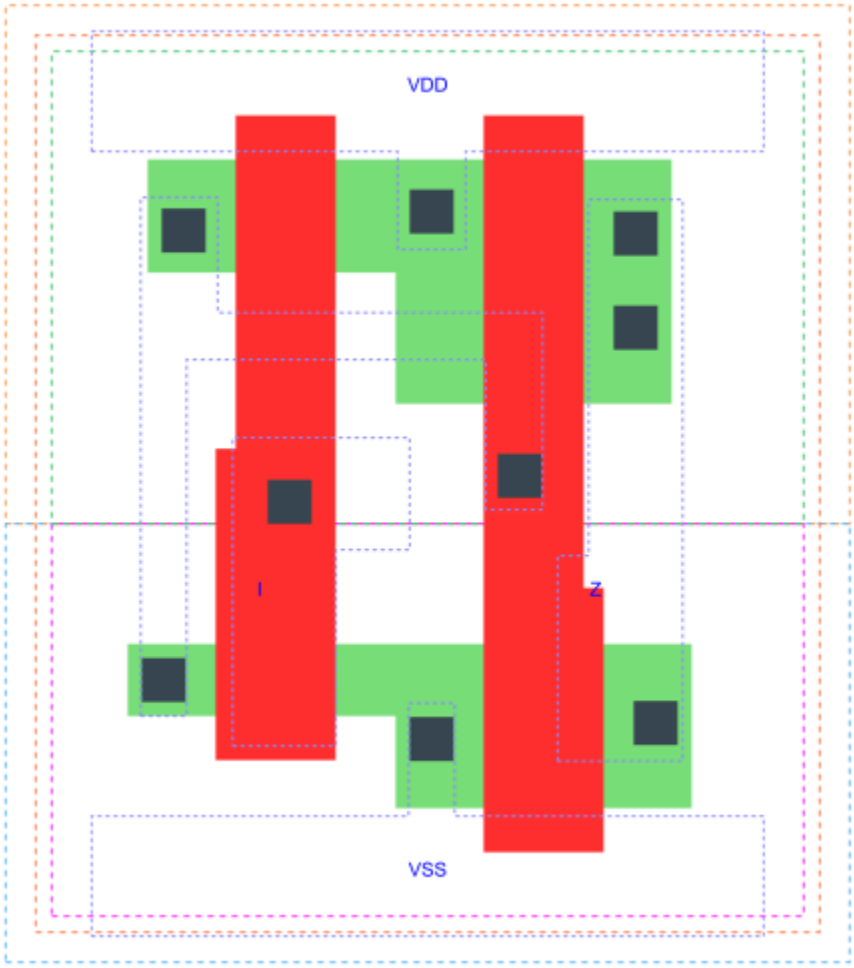

BUF_X1 is a buffer, 1X drive strength

Attributes

Attribute	Value
area	13.171200 μm^2

OUTPUT FUNCTIONS

Output Pin	Function
Z	I

TRUTH TABLE FOR Z

I	Z
1	1
0	0

FUNCTIONAL SCHEMATIC

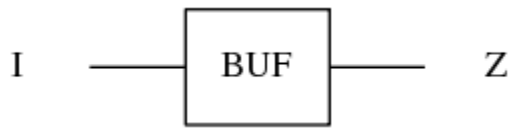

PIN CAPACITANCE (pf)

Pin	Type	Capacitance (pf)
I	input	0.0029

DELAY AND OUTPUT TRANSITION TIME corresponding to min slew and load

Input Pin	Output	When Condition	Tin (ns)	Out Load (pf)	Delay (ns)	Tout (ns)
I(LH)	Z(LH)	default	0.0100	0.0010	0.1577	0.0402
I(HL)	Z(HL)	default	0.0100	0.0010	0.1852	0.0396

DYNAMIC ENERGY

Input Pin	When Condition	Tin (ns)	Output	Out Load (pf)	Energy (uW/MHz)
I	default	0.0100	Z(LH)	0.0010	0.1060
I	default	0.0100	Z(HL)	0.0010	0.1778

LEAKAGE POWER

When Condition	Power (nW)
!I	0.1041
I	0.1015

gf180mcu_fd_sc_mcu7t5v0__buf_x12

gf180mcu_fd_sc_mcu7t5v0__buf_x12 symbol

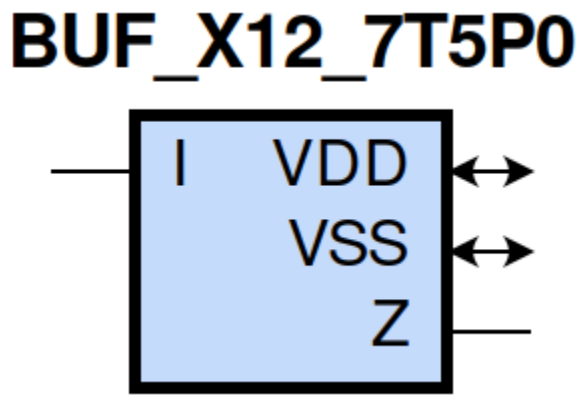

gf180mcu_fd_sc_mcu7t5v0__buf_x12 schematic

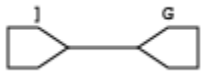

gf180mcu_fd_sc_mcu7t5v0__buf_x12 layout

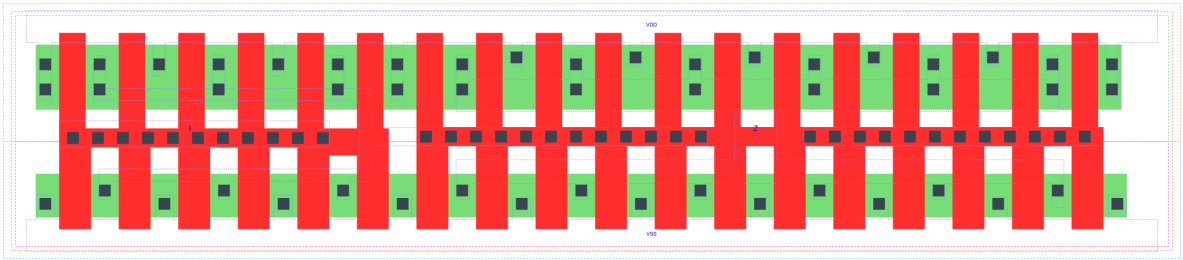

BUF_X12 is a buffer, 12X drive strength

Attributes

Attribute	Value
area	83.417600 μm^2

OUTPUT FUNCTIONS

Output Pin	Function
Z	I

TRUTH TABLE FOR Z

I	Z
1	1
0	0

FUNCTIONAL SCHEMATIC

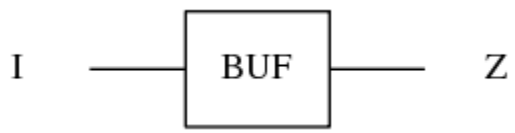

PIN CAPACITANCE (pf)

Pin	Type	Capacitance (pf)
I	input	0.0276

DELAY AND OUTPUT TRANSITION TIME corresponding to min slew and load

Input Pin	Output	When Condition	Tin (ns)	Out Load (pf)	Delay (ns)	Tout (ns)
I(LH)	Z(LH)	default	0.0100	0.0010	0.1231	0.0256
I(HL)	Z(HL)	default	0.0100	0.0010	0.1409	0.0258

DYNAMIC ENERGY

Input Pin	When Condition	Tin (ns)	Output	Out Load (pf)	Energy (uW/MHz)
I	default	0.0100	Z(LH)	0.0010	1.0456
I	default	0.0100	Z(HL)	0.0010	1.7935

LEAKAGE POWER

When Condition	Power (nW)
!I	0.5206
I	0.5143

gf180mcu_fd_sc_mcu7t5v0__buf_x16

gf180mcu_fd_sc_mcu7t5v0__buf_x16 symbol

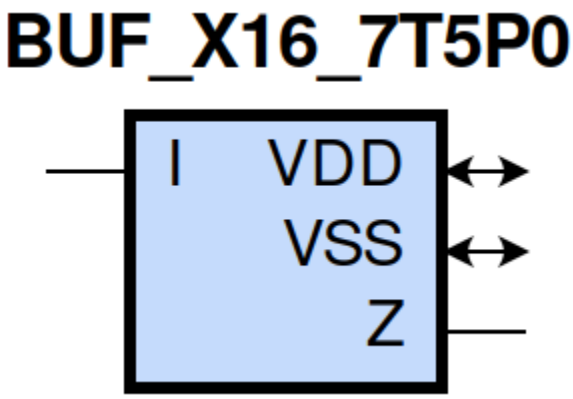

gf180mcu_fd_sc_mcu7t5v0__buf_x16 schematic

gf180mcu_fd_sc_mcu7t5v0__buf_x16 layout

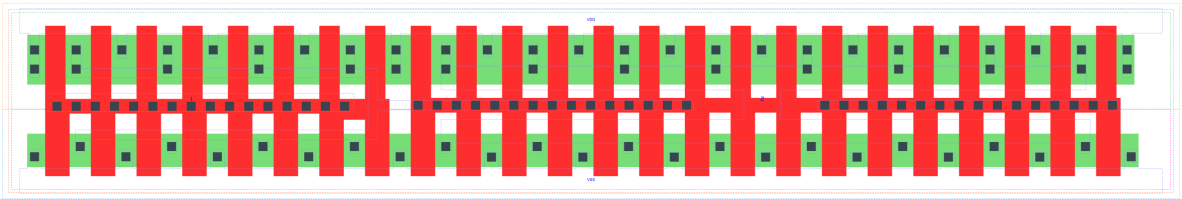

BUF_X16 is a buffer, 16X drive strength

Attributes

Attribute	Value
area	109.760000 μm^2

OUTPUT FUNCTIONS

Output Pin	Function
Z	I

TRUTH TABLE FOR Z

I	Z
1	1
0	0

FUNCTIONAL SCHEMATIC

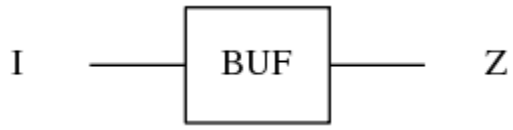

PIN CAPACITANCE (pf)

Pin	Type	Capacitance (pf)
I	input	0.0368

DELAY AND OUTPUT TRANSITION TIME corresponding to min slew and load

Input Pin	Output	When Condition	Tin (ns)	Out Load (pf)	Delay (ns)	Tout (ns)
I(LH)	Z(LH)	default	0.0100	0.0010	0.1240	0.0257
I(HL)	Z(HL)	default	0.0100	0.0010	0.1417	0.0260

DYNAMIC ENERGY

Input Pin	When Condition	Tin (ns)	Output	Out Load (pf)	Energy (uW/MHz)
I	default	0.0100	Z(LH)	0.0010	1.4066
I	default	0.0100	Z(HL)	0.0010	2.3994

LEAKAGE POWER

When Condition	Power (nW)
!I	0.6775
I	0.6691

gf180mcu_fd_sc_mcu7t5v0__buf_2

gf180mcu_fd_sc_mcu7t5v0__buf_2 symbol

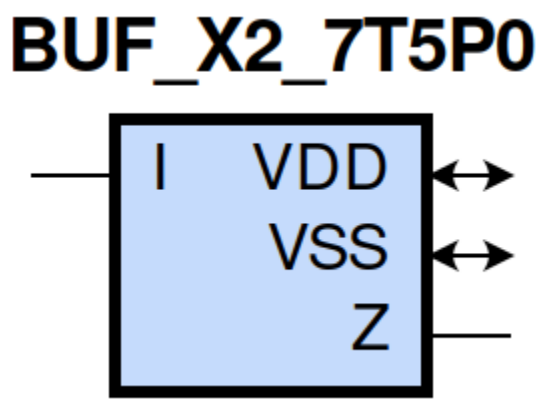

gf180mcu_fd_sc_mcu7t5v0__buf_2 schematic

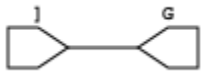

gf180mcu_fd_sc_mcu7t5v0__buf_2 layout

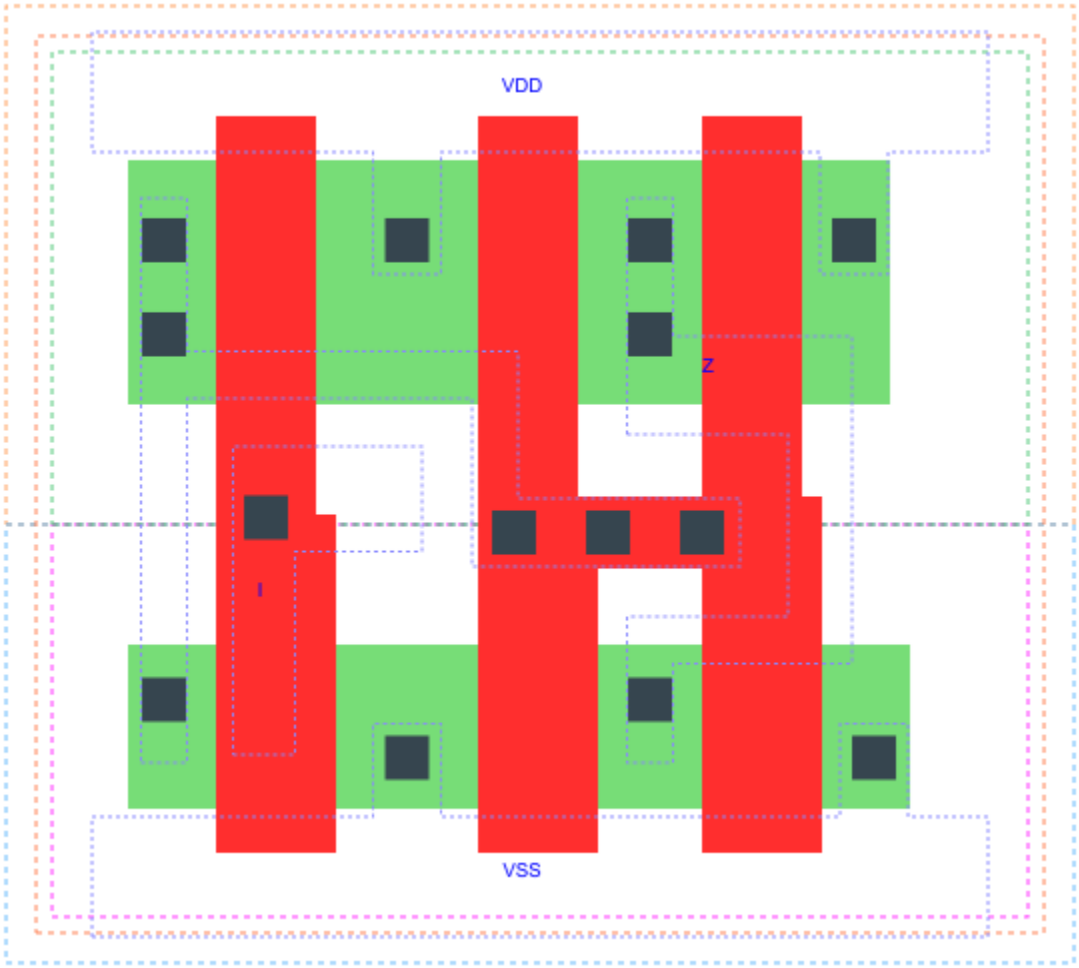

BUF_X2 is a buffer, 2X drive strength

Attributes

Attribute	Value
area	17.561600 μm^2

OUTPUT FUNCTIONS

Output Pin	Function
Z	I

TRUTH TABLE FOR Z

I	Z
1	1
0	0

FUNCTIONAL SCHEMATIC

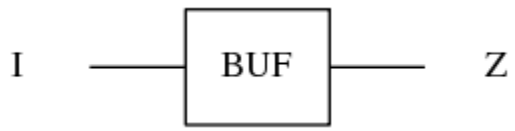

PIN CAPACITANCE (pf)

Pin	Type	Capacitance (pf)
I	input	0.0050

DELAY AND OUTPUT TRANSITION TIME corresponding to min slew and load

Input Pin	Output	When Condition	Tin (ns)	Out Load (pf)	Delay (ns)	Tout (ns)
I(LH)	Z(LH)	default	0.0100	0.0010	0.1335	0.0284
I(HL)	Z(HL)	default	0.0100	0.0010	0.1522	0.0287

DYNAMIC ENERGY

Input Pin	When Condition	Tin (ns)	Output	Out Load (pf)	Energy (uW/MHz)
I	default	0.0100	Z(LH)	0.0010	0.1786
I	default	0.0100	Z(HL)	0.0010	0.3168

LEAKAGE POWER

When Condition	Power (nW)
!I	0.1284
I	0.1274

gf180mcu_fd_sc_mcu7t5v0__buf_x20

gf180mcu_fd_sc_mcu7t5v0__buf_x20 symbol

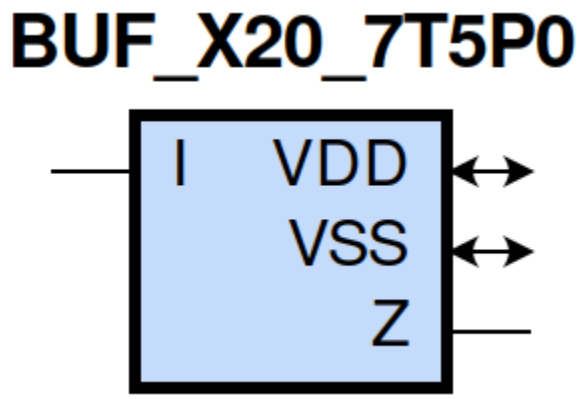

gf180mcu_fd_sc_mcu7t5v0__buf_x20 schematic

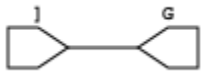

gf180mcu_fd_sc_mcu7t5v0__buf_x20 layout

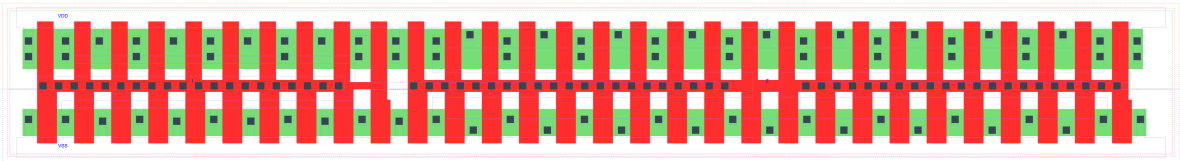

BUF_X20 is a buffer, 20X drive strength

Attributes

Attribute	Value
area	136.102400 μm^2

OUTPUT FUNCTIONS

Output Pin	Function
Z	I

TRUTH TABLE FOR Z

I	Z
1	1
0	0

FUNCTIONAL SCHEMATIC

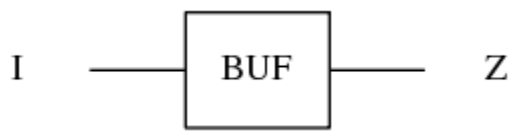

PIN CAPACITANCE (pf)

Pin	Type	Capacitance (pf)
I	input	0.0461

DELAY AND OUTPUT TRANSITION TIME corresponding to min slew and load

Input Pin	Output	When Condition	Tin (ns)	Out Load (pf)	Delay (ns)	Tout (ns)
I(LH)	Z(LH)	default	0.0100	0.0010	0.1252	0.0261
I(HL)	Z(HL)	default	0.0100	0.0010	0.1430	0.0264

DYNAMIC ENERGY

Input Pin	When Condition	Tin (ns)	Output	Out Load (pf)	Energy (uW/MHz)
I	default	0.0100	Z(LH)	0.0010	1.7820
I	default	0.0100	Z(HL)	0.0010	3.0101

LEAKAGE POWER

When Condition	Power (nW)
!I	0.8343
I	0.8239

gf180mcu_fd_sc_mcu7t5v0__buf_3

gf180mcu_fd_sc_mcu7t5v0__buf_3 symbol

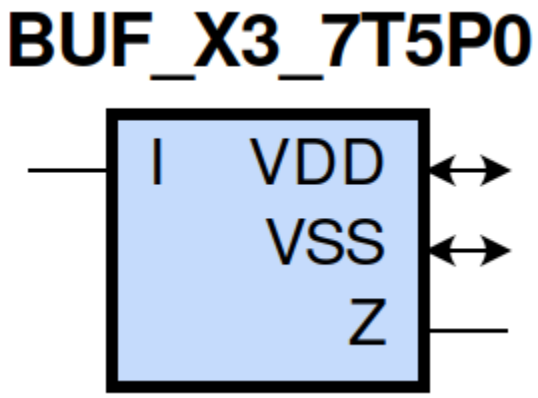

gf180mcu_fd_sc_mcu7t5v0__buf_3 schematic

gf180mcu_fd_sc_mcu7t5v0__buf_3 layout

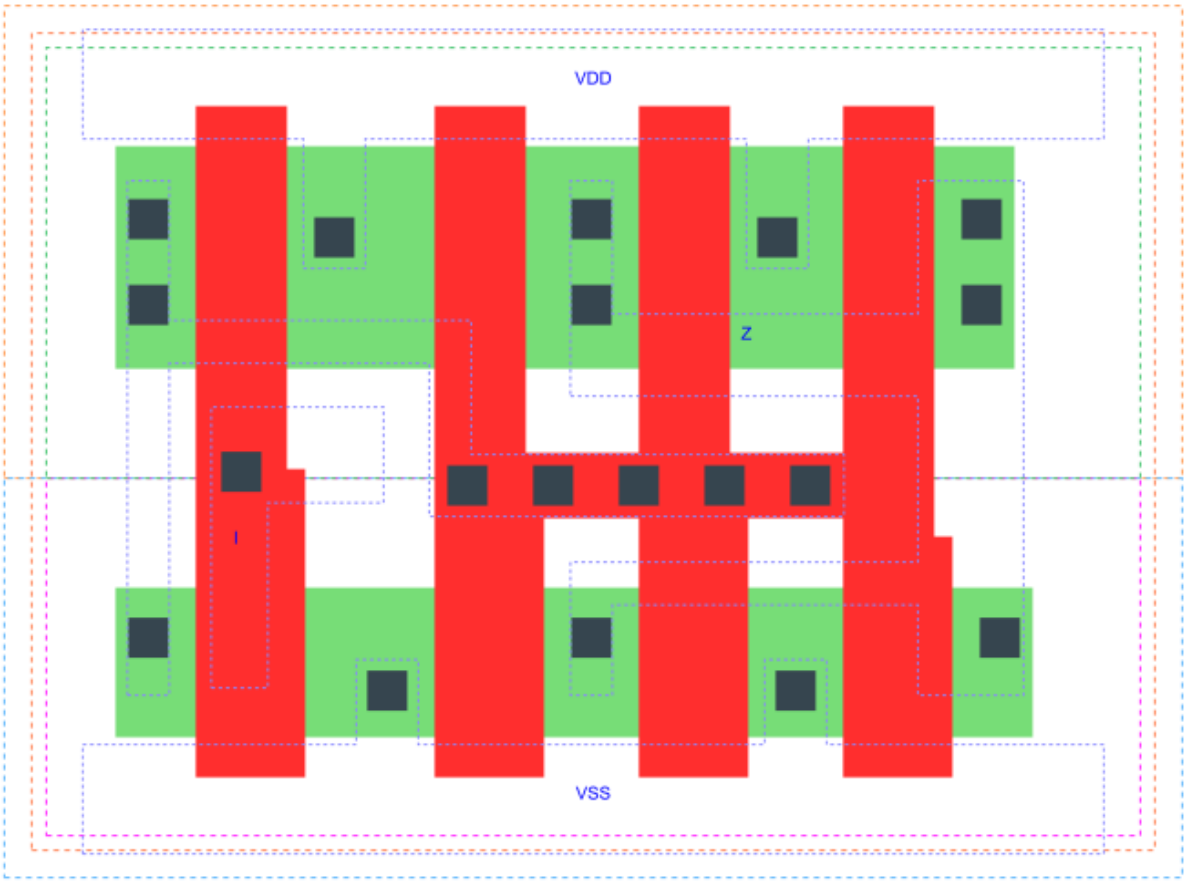

BUF_X3 is a buffer, 3X drive strength

Attributes

Attribute	Value
area	21.952000 μm^2

OUTPUT FUNCTIONS

Output Pin	Function
Z	I

TRUTH TABLE FOR Z

I	Z
1	1
0	0

FUNCTIONAL SCHEMATIC

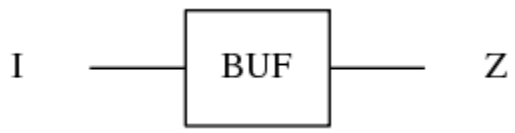

PIN CAPACITANCE (pf)

Pin	Type	Capacitance (pf)
I	input	0.0050

DELAY AND OUTPUT TRANSITION TIME corresponding to min slew and load

Input Pin	Output	When Condition	Tin (ns)	Out Load (pf)	Delay (ns)	Tout (ns)
I(LH)	Z(LH)	default	0.0100	0.0010	0.1656	0.0329
I(HL)	Z(HL)	default	0.0100	0.0010	0.1905	0.0362

DYNAMIC ENERGY

Input Pin	When Condition	Tin (ns)	Output	Out Load (pf)	Energy (uW/MHz)
I	default	0.0100	Z(LH)	0.0010	0.3024
I	default	0.0100	Z(HL)	0.0010	0.4694

LEAKAGE POWER

When Condition	Power (nW)
!I	0.1549
I	0.1528

gf180mcu_fd_sc_mcu7t5v0__buf_4

gf180mcu_fd_sc_mcu7t5v0__buf_4 symbol

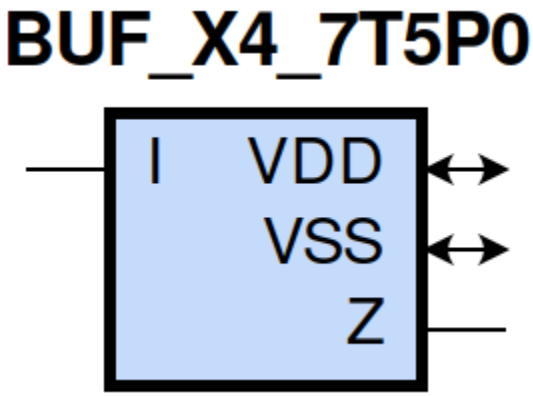

gf180mcu_fd_sc_mcu7t5v0__buf_4 schematic

gf180mcu_fd_sc_mcu7t5v0__buf_4 layout

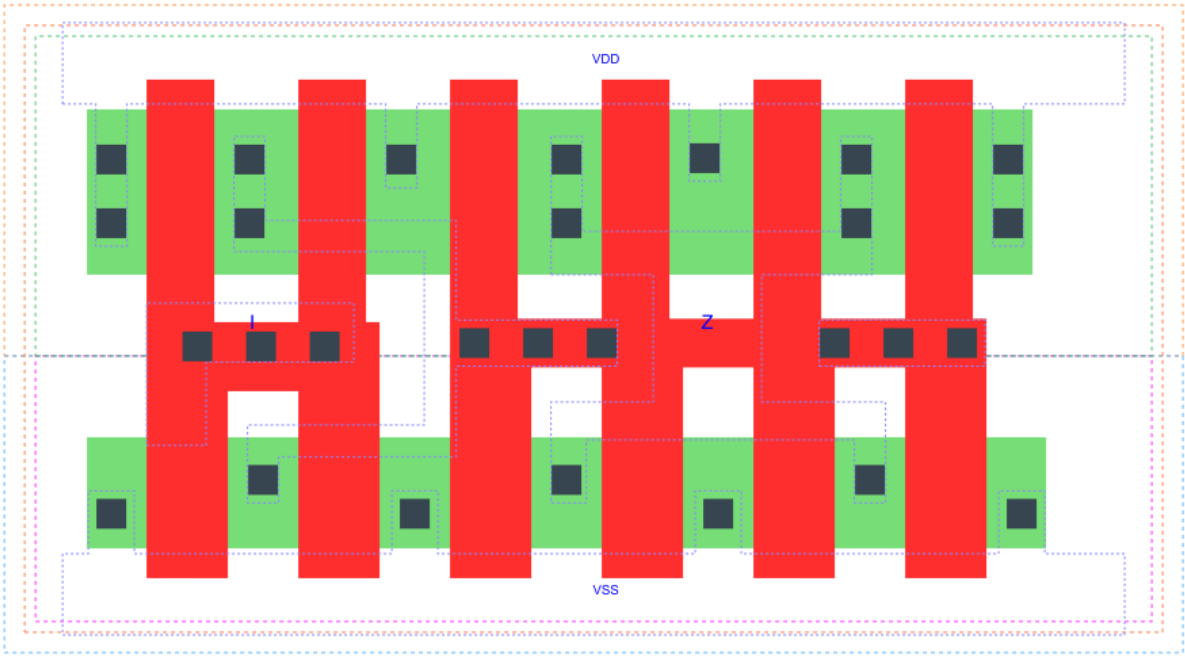

BUF_X4 is a buffer, 4X drive strength

Attributes

Attribute	Value
area	30.732800 μm^2

OUTPUT FUNCTIONS

Output Pin	Function
Z	I

TRUTH TABLE FOR Z

I	Z
1	1
0	0

FUNCTIONAL SCHEMATIC

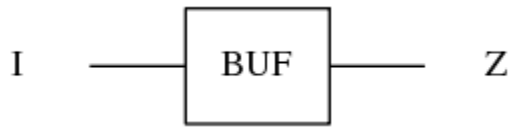

PIN CAPACITANCE (pf)

Pin	Type	Capacitance (pf)
I	input	0.0093

DELAY AND OUTPUT TRANSITION TIME corresponding to min slew and load

Input Pin	Output	When Condition	Tin (ns)	Out Load (pf)	Delay (ns)	Tout (ns)
I(LH)	Z(LH)	default	0.0100	0.0010	0.1207	0.0250
I(HL)	Z(HL)	default	0.0100	0.0010	0.1381	0.0252

DYNAMIC ENERGY

Input Pin	When Condition	Tin (ns)	Output	Out Load (pf)	Energy (uW/MHz)
I	default	0.0100	Z(LH)	0.0010	0.3273
I	default	0.0100	Z(HL)	0.0010	0.5874

LEAKAGE POWER

When Condition	Power (nW)
!I	0.2069
I	0.2048

gf180mcu_fd_sc_mcu7t5v0__buf_8

gf180mcu_fd_sc_mcu7t5v0__buf_8 symbol

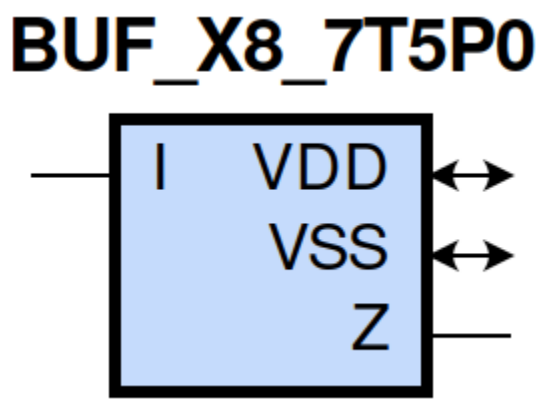

gf180mcu_fd_sc_mcu7t5v0__buf_8 schematic

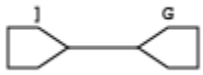

gf180mcu_fd_sc_mcu7t5v0__buf_8 layout

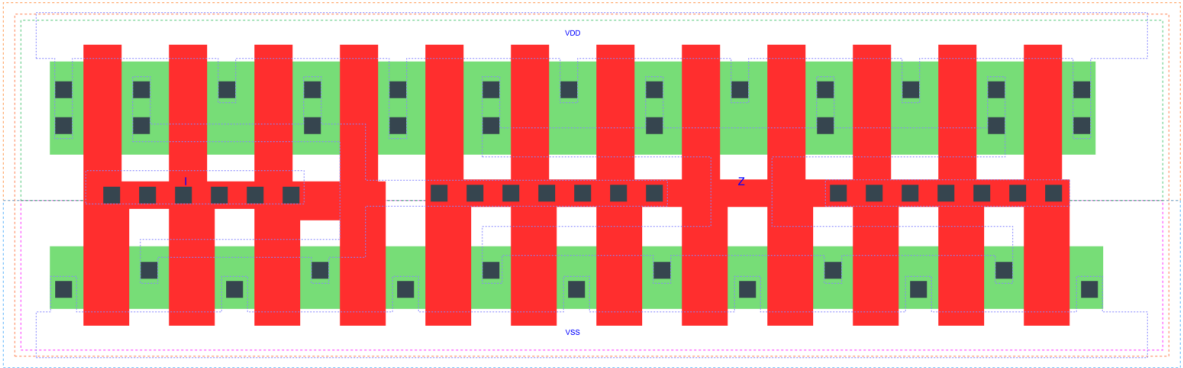

BUF_X8 is a buffer, 8X drive strength

Attributes

Attribute	Value
area	57.075200 μm^2

OUTPUT FUNCTIONS

Output Pin	Function
Z	I

TRUTH TABLE FOR Z

I	Z
1	1
0	0

FUNCTIONAL SCHEMATIC

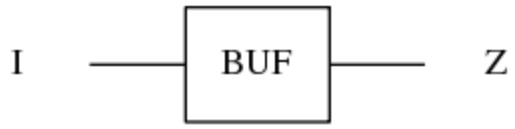

PIN CAPACITANCE (pf)

Pin	Type	Capacitance (pf)
I	input	0.0184

DELAY AND OUTPUT TRANSITION TIME corresponding to min slew and load

Input Pin	Output	When Condition	Tin (ns)	Out Load (pf)	Delay (ns)	Tout (ns)
I(LH)	Z(LH)	default	0.0100	0.0010	0.1216	0.0251
I(HL)	Z(HL)	default	0.0100	0.0010	0.1392	0.0254

DYNAMIC ENERGY

Input Pin	When Condition	Tin (ns)	Output	Out Load (pf)	Energy (uW/MHz)
I	default	0.0100	Z(LH)	0.0010	0.6790
I	default	0.0100	Z(HL)	0.0010	1.1860

LEAKAGE POWER

When Condition	Power (nW)
!I	0.3637
I	0.3596

gf180mcu_fd_sc_mcu7t5v0__bufz_1

gf180mcu_fd_sc_mcu7t5v0__bufz_1 symbol

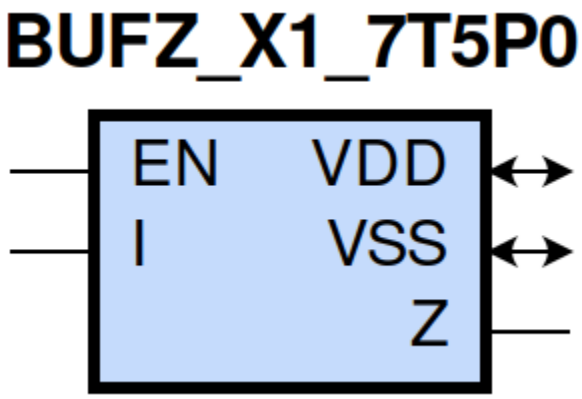

gf180mcu_fd_sc_mcu7t5v0__bufz_1 schematic

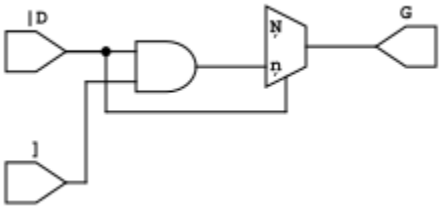

gf180mcu_fd_sc_mcu7t5v0__bufz_1 layout

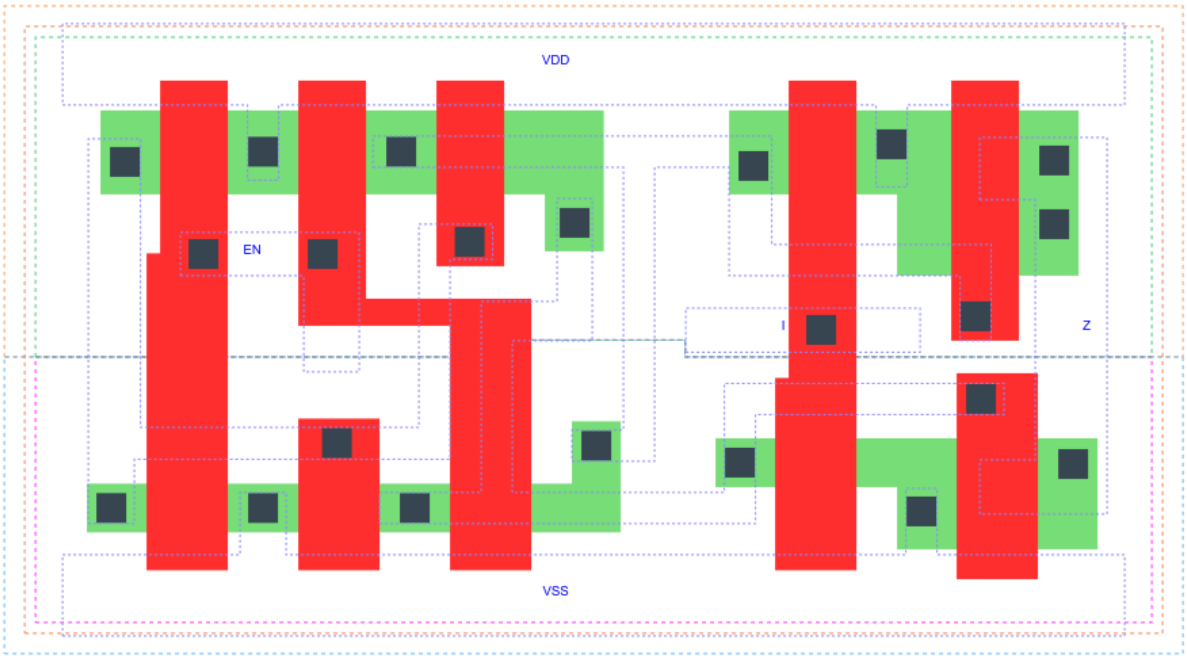

BUFZ_X1 is a tri-state buffer, 1X drive strength

Attributes

Attribute	Value
area	30.732800 μm^2

OUTPUT FUNCTIONS

Output Pin	Function
Z	I

TRUTH TABLE FOR Z

EN	I	Z
1	1	1
1	0	0
0	?	z

FUNCTIONAL SCHEMATIC

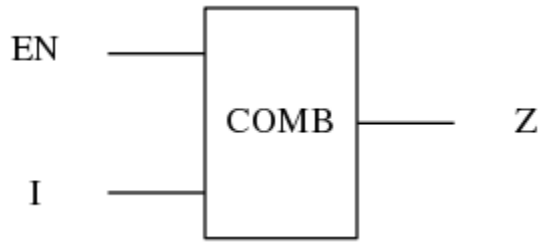

PIN CAPACITANCE (pf)

Pin	Type	Capacitance (pf)
EN	input	0.0057
I	input	0.0031

DELAY AND OUTPUT TRANSITION TIME corresponding to min slew and load

Input Pin	Output	When Condition	Tin (ns)	Out Load (pf)	Delay (ns)	Tout (ns)
EN(LH)	Z(ZL)	!I	0.0100	0.0010	0.1925	0.0540
EN(LH)	Z(ZH)	I	0.0100	0.0010	0.1691	0.0535
EN(HL)	Z(LZ)	!I	0.0100		0.2490	0.0000
EN(HL)	Z(HZ)	I	0.0100		0.1650	0.0000
I(HL)	Z(HL)	EN	0.0100	0.0010	0.3173	0.0606
I(LH)	Z(LH)	EN	0.0100	0.0010	0.2960	0.0562

DYNAMIC ENERGY

Input Pin	When Condition	Tin (ns)	Output	Out Load (pf)	Energy (uW/MHz)
I	EN	0.0100	Z(HL)	0.0010	0.3276
I	EN	0.0100	Z(LH)	0.0010	0.1472
EN(HL)	!I	0.0100	n/a	n/a	0.1673
EN(HL)	I	0.0100	n/a	n/a	0.2343
I(LH)	!EN	0.0100	n/a	n/a	-0.0198
EN	I	0.0100	Z(LH)	0.0010	0.1122
I(HL)	!EN	0.0100	n/a	n/a	0.0199
EN	!I	0.0100	Z(HL)	0.0010	0.1977

LEAKAGE POWER

When Condition	Power (nW)
!EN&!I	0.1442
!EN&I	0.1442
EN&!I	0.2078
EN&I	0.2038

gf180mcu_fd_sc_mcu7t5v0__bufz_x12

gf180mcu_fd_sc_mcu7t5v0__bufz_x12 symbol

BUFZ_X12_7T5P0

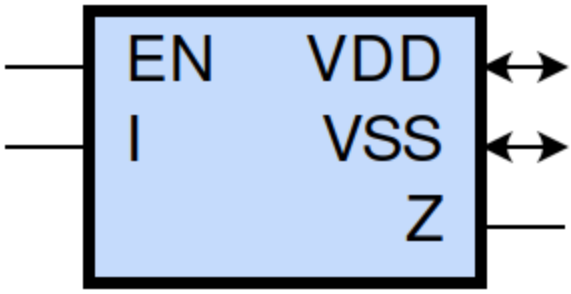

gf180mcu_fd_sc_mcu7t5v0__bufz_x12 schematic

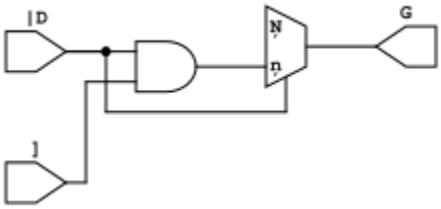

gf180mcu_fd_sc_mcu7t5v0__bufz_x12 layout

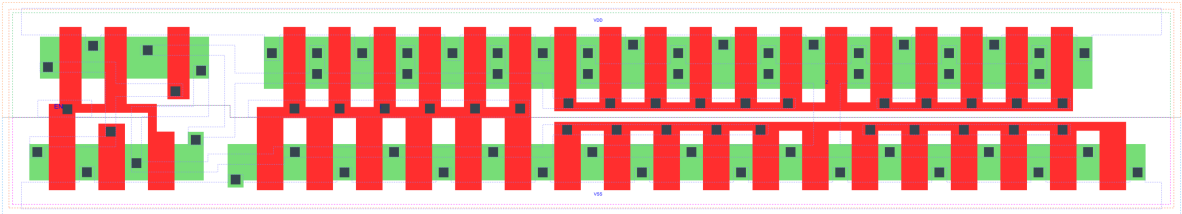

BUFZ_X12 is a tri-state buffer, 12X drive strength | | Attributes

Attribute	Value
area	100.979200 μm^2

OUTPUT FUNCTIONS

Output Pin	Function
Z	I

TRUTH TABLE FOR Z

EN	I	Z
1	1	1
1	0	0
0	?	z

FUNCTIONAL SCHEMATIC

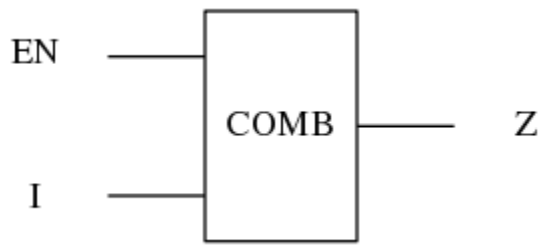

PIN CAPACITANCE (pf)

Pin	Type	Capacitance (pf)
EN	input	0.0084
I	input	0.0271

DELAY AND OUTPUT TRANSITION TIME corresponding to min slew and load

Input Pin	Output	When Condition	Tin (ns)	Out Load (pf)	Delay (ns)	Tout (ns)
EN(LH)	Z(ZL)	!I	0.0100	0.0010	0.1837	0.0468
EN(LH)	Z(ZH)	I	0.0100	0.0010	0.2164	0.0540
EN(HL)	Z(LZ)	!I	0.0100		0.3930	0.0000
EN(HL)	Z(HZ)	I	0.0100		0.5680	0.0000
I(HL)	Z(HL)	EN	0.0100	0.0010	0.2363	0.0448
I(LH)	Z(LH)	EN	0.0100	0.0010	0.2736	0.0507

DYNAMIC ENERGY

Input Pin	When Condition	Tin (ns)	Output	Out Load (pf)	Energy (uW/MHz)
I	EN	0.0100	Z(HL)	0.0010	1.7488
I	EN	0.0100	Z(LH)	0.0010	0.9092
EN(HL)	!I	0.0100	n/a	n/a	0.2280
EN(HL)	I	0.0100	n/a	n/a	0.5561
I(LH)	!EN	0.0100	n/a	n/a	-0.2263
EN	I	0.0100	Z(LH)	0.0010	0.9670
I(HL)	!EN	0.0100	n/a	n/a	0.2277
EN	!I	0.0100	Z(HL)	0.0010	1.0493

LEAKAGE POWER

When Condition	Power (nW)
!EN&!I	0.2824
!EN&I	0.2824
EN&!I	0.6220
EN&I	0.6168

gf180mcu_fd_sc_mcu7t5v0__bufz_x16

gf180mcu_fd_sc_mcu7t5v0__bufz_x16 symbol

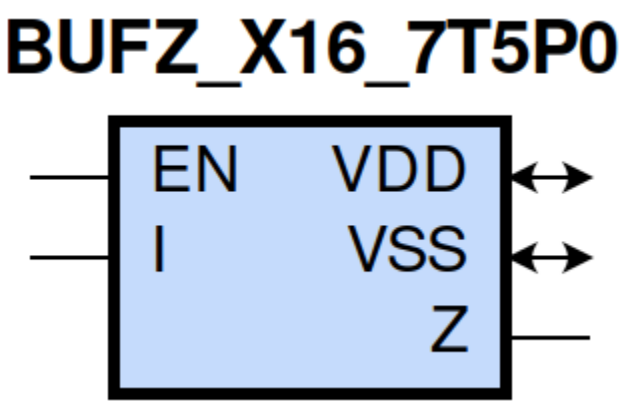

gf180mcu_fd_sc_mcu7t5v0__bufz_x16 schematic

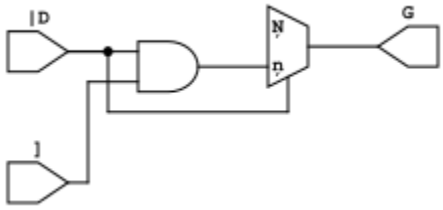

gf180mcu_fd_sc_mcu7t5v0__bufz_x16 layout

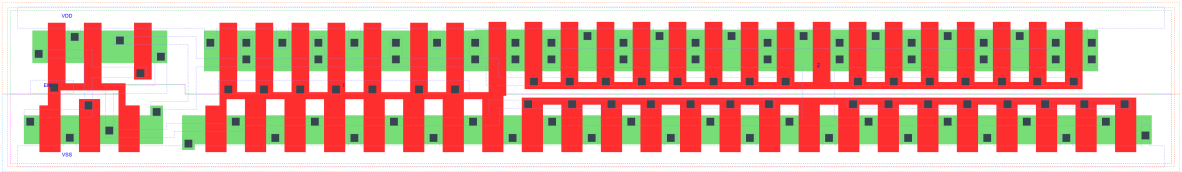

BUFZ_X16 is a tri-state buffer, 16X drive strength | | Attributes

Attribute	Value
area	127.321600 μm^2

OUTPUT FUNCTIONS

Output Pin	Function
Z	I

TRUTH TABLE FOR Z

EN	I	Z
1	1	1
1	0	0
0	?	z

FUNCTIONAL SCHEMATIC

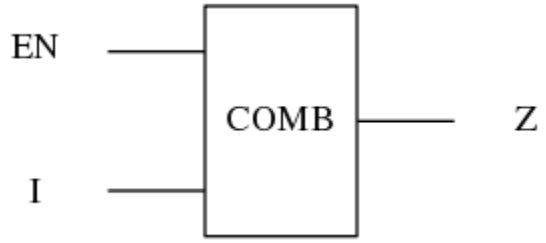

PIN CAPACITANCE (pf)

Pin	Type	Capacitance (pf)
EN	input	0.0083
I	input	0.0353

DELAY AND OUTPUT TRANSITION TIME corresponding to min slew and load

Input Pin	Output	When Condition	Tin (ns)	Out Load (pf)	Delay (ns)	Tout (ns)
EN(LH)	Z(ZL)	!I	0.0100	0.0010	0.2074	0.0538
EN(LH)	Z(ZH)	I	0.0100	0.0010	0.2545	0.0629
EN(HL)	Z(LZ)	!I	0.0100		0.4710	0.0000
EN(HL)	Z(HZ)	I	0.0100		0.7580	0.0000
I(HL)	Z(HL)	EN	0.0100	0.0010	0.2659	0.0509
I(LH)	Z(LH)	EN	0.0100	0.0010	0.3199	0.0587

DYNAMIC ENERGY

Input Pin	When Condition	Tin (ns)	Output	Out Load (pf)	Energy (uW/MHz)
I	EN	0.0100	Z(HL)	0.0010	2.2575
I	EN	0.0100	Z(LH)	0.0010	1.2261
EN(HL)	!I	0.0100	n/a	n/a	0.2259
EN(HL)	I	0.0100	n/a	n/a	0.6459
I(LH)	!EN	0.0100	n/a	n/a	-0.2961
EN	I	0.0100	Z(LH)	0.0010	1.3076
I(HL)	!EN	0.0100	n/a	n/a	0.2972
EN	!I	0.0100	Z(HL)	0.0010	1.3619

LEAKAGE POWER

When Condition	Power (nW)
!EN&!I	0.3339
!EN&I	0.3339
EN&!I	0.7788
EN&I	0.7714

gf180mcu_fd_sc_mcu7t5v0__bufz_2

gf180mcu_fd_sc_mcu7t5v0__bufz_2 symbol

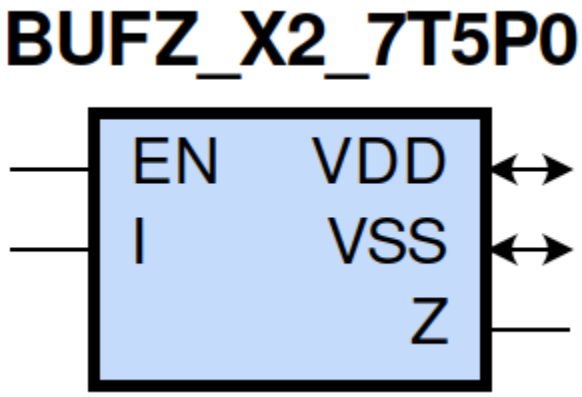

gf180mcu_fd_sc_mcu7t5v0__bufz_2 schematic

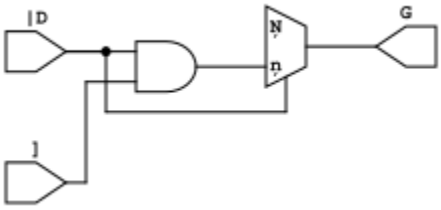

gf180mcu_fd_sc_mcu7t5v0__bufz_2 layout

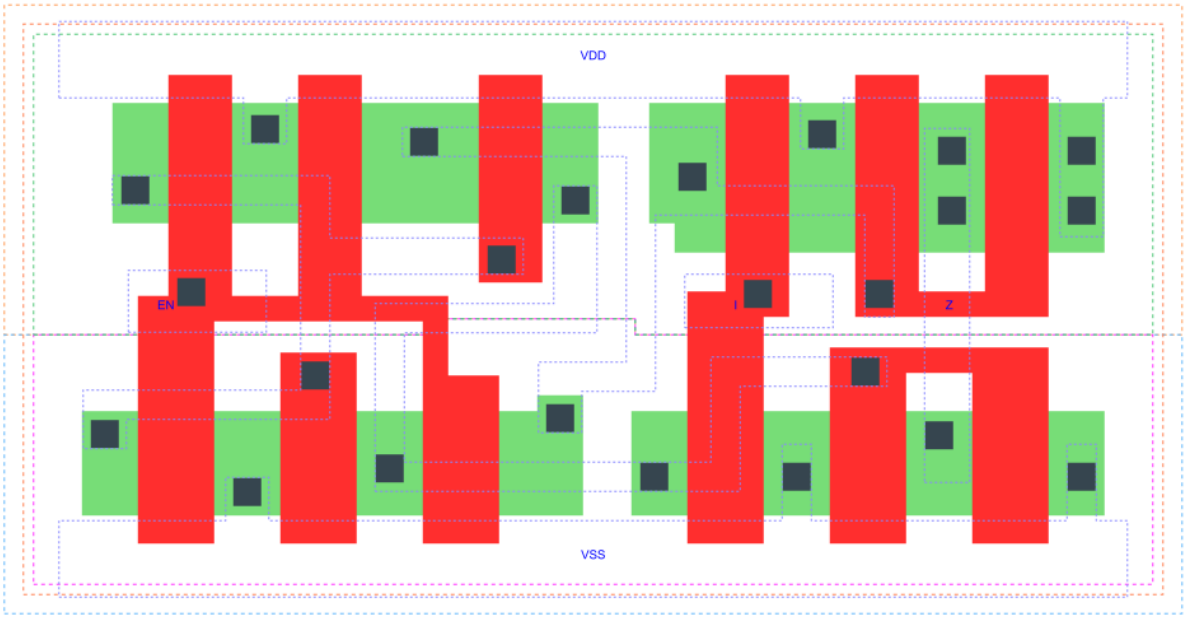

BUFZ_X2 is a tri-state buffer, 2X drive strength

Attributes

Attribute	Value
area	32.928000 μm^2

OUTPUT FUNCTIONS

Output Pin	Function
Z	I

TRUTH TABLE FOR Z

EN	I	Z
1	1	1
1	0	0
0	?	z

FUNCTIONAL SCHEMATIC

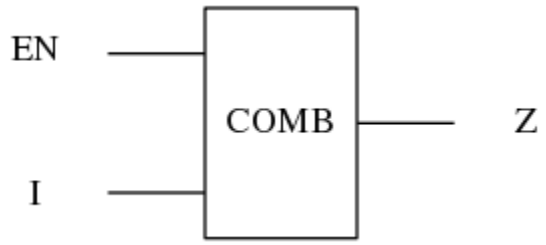

PIN CAPACITANCE (pf)

Pin	Type	Capacitance (pf)
EN	input	0.0084
I	input	0.0048

DELAY AND OUTPUT TRANSITION TIME corresponding to min slew and load

Input Pin	Output	When Condition	Tin (ns)	Out Load (pf)	Delay (ns)	Tout (ns)
EN(LH)	Z(ZL)	!I	0.0100	0.0010	0.1351	0.0361
EN(LH)	Z(ZH)	I	0.0100	0.0010	0.1218	0.0357
EN(HL)	Z(LZ)	!I	0.0100		0.2060	0.0000
EN(HL)	Z(HZ)	I	0.0100		0.1710	0.0000
I(HL)	Z(HL)	EN	0.0100	0.0010	0.2479	0.0425
I(LH)	Z(LH)	EN	0.0100	0.0010	0.2188	0.0371

DYNAMIC ENERGY

Input Pin	When Condition	Tin (ns)	Output	Out Load (pf)	Energy (uW/MHz)
I	EN	0.0100	Z(HL)	0.0010	0.5089
I	EN	0.0100	Z(LH)	0.0010	0.2110
EN(HL)	!I	0.0100	n/a	n/a	0.2267
EN(HL)	I	0.0100	n/a	n/a	0.3262
I(LH)	!EN	0.0100	n/a	n/a	-0.0377
EN	I	0.0100	Z(LH)	0.0010	0.1805
I(HL)	!EN	0.0100	n/a	n/a	0.0379
EN	!I	0.0100	Z(HL)	0.0010	0.3028

LEAKAGE POWER

When Condition	Power (nW)
!EN&!I	0.1531
!EN&I	0.1531
EN&!I	0.2302
EN&I	0.2300

gf180mcu_fd_sc_mcu7t5v0__bufz_3

gf180mcu_fd_sc_mcu7t5v0__bufz_3 symbol

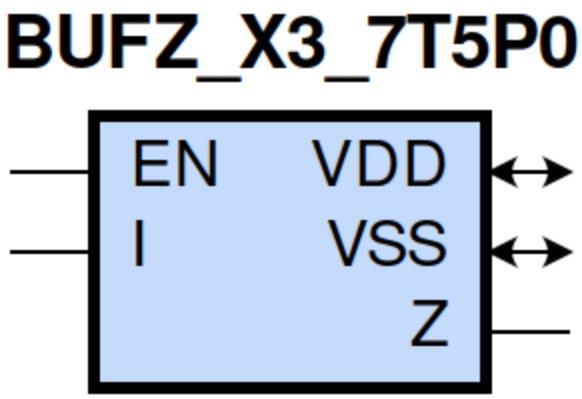

gf180mcu_fd_sc_mcu7t5v0__bufz_3 schematic

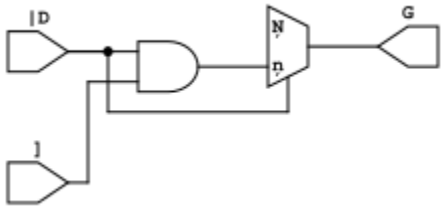

gf180mcu_fd_sc_mcu7t5v0__bufz_3 layout

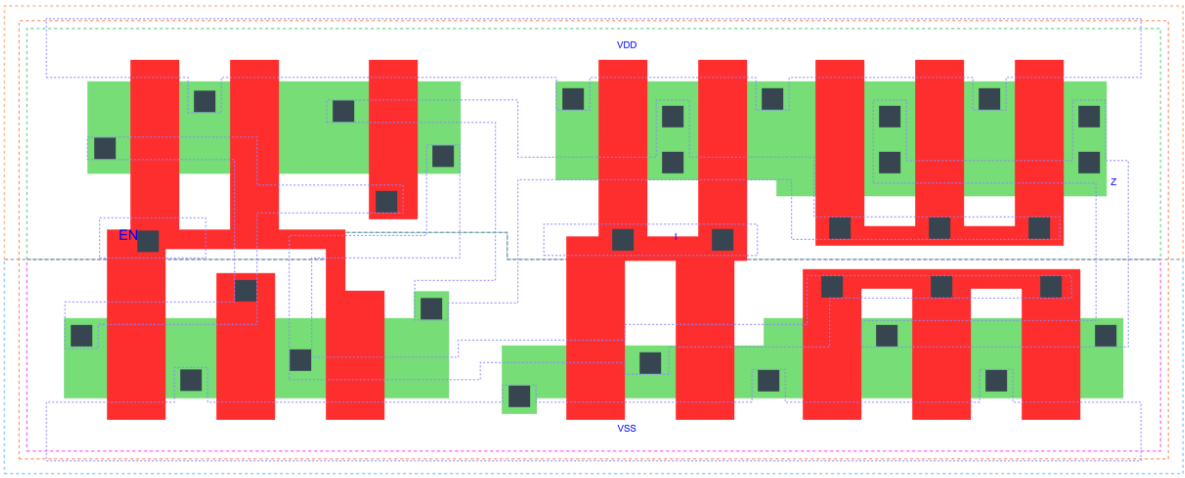

BUFZ_X3 is a tri-state buffer, 3X drive strength

Attributes

Attribute	Value
area	43.904000 μm^2

OUTPUT FUNCTIONS

Output Pin	Function
Z	I

TRUTH TABLE FOR Z

EN	I	Z
1	1	1
1	0	0
0	?	z

FUNCTIONAL SCHEMATIC

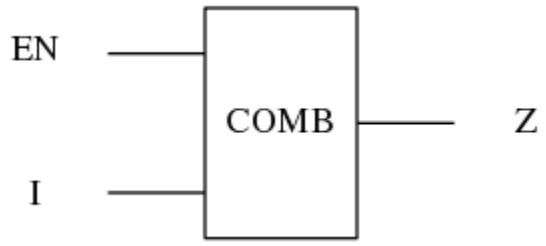

PIN CAPACITANCE (pf)

Pin	Type	Capacitance (pf)
EN	input	0.0084
I	input	0.0075

DELAY AND OUTPUT TRANSITION TIME corresponding to min slew and load

Input Pin	Output	When Condition	Tin (ns)	Out Load (pf)	Delay (ns)	Tout (ns)
EN(LH)	Z(ZL)	!I	0.0100	0.0010	0.1404	0.0365
EN(LH)	Z(ZH)	I	0.0100	0.0010	0.1383	0.0400
EN(HL)	Z(LZ)	!I	0.0100		0.2280	0.0000
EN(HL)	Z(HZ)	I	0.0100		0.2100	0.0000
I(HL)	Z(HL)	EN	0.0100	0.0010	0.2095	0.0386
I(LH)	Z(LH)	EN	0.0100	0.0010	0.2210	0.0401

DYNAMIC ENERGY

Input Pin	When Condition	Tin (ns)	Output	Out Load (pf)	Energy (uW/MHz)
I	EN	0.0100	Z(HL)	0.0010	0.6480
I	EN	0.0100	Z(LH)	0.0010	0.2788
EN(HL)	!I	0.0100	n/a	n/a	0.2271
EN(HL)	I	0.0100	n/a	n/a	0.3606
I(LH)	!EN	0.0100	n/a	n/a	-0.0646
EN	I	0.0100	Z(LH)	0.0010	0.2673
I(HL)	!EN	0.0100	n/a	n/a	0.0648
EN	!I	0.0100	Z(HL)	0.0010	0.3783

LEAKAGE POWER

When Condition	Power (nW)
!EN&!I	0.1660
!EN&I	0.1660
EN&!I	0.2822
EN&I	0.2817

gf180mcu_fd_sc_mcu7t5v0__bufz_4

gf180mcu_fd_sc_mcu7t5v0__bufz_4 symbol

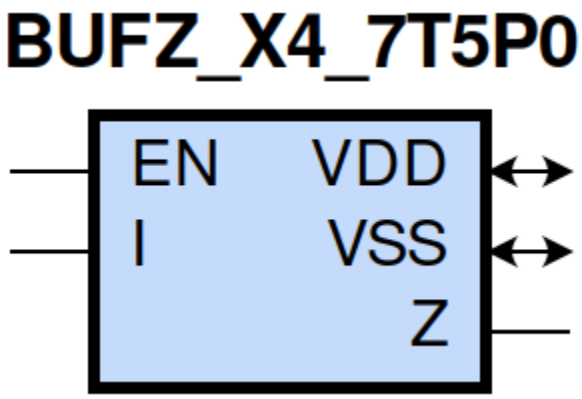

gf180mcu_fd_sc_mcu7t5v0__bufz_4 schematic

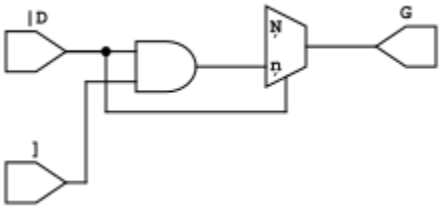

gf180mcu_fd_sc_mcu7t5v0__bufz_4 layout

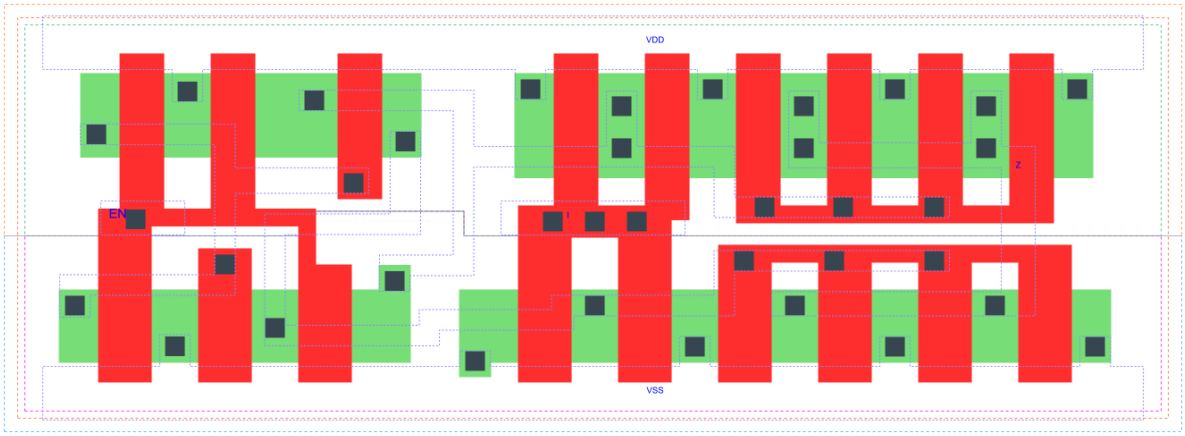

BUFZ_X4 is a tri-state buffer, 4X drive strength

Attributes

Attribute	Value
area	48.294400 μm^2

OUTPUT FUNCTIONS

Output Pin	Function
Z	I

TRUTH TABLE FOR Z

EN	I	Z
1	1	1
1	0	0
0	?	z

FUNCTIONAL SCHEMATIC

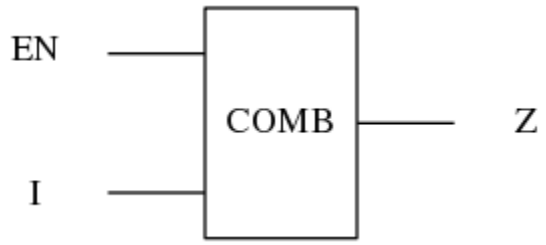

PIN CAPACITANCE (pf)

Pin	Type	Capacitance (pf)
EN	input	0.0084
I	input	0.0092

DELAY AND OUTPUT TRANSITION TIME corresponding to min slew and load

Input Pin	Output	When Condition	Tin (ns)	Out Load (pf)	Delay (ns)	Tout (ns)
EN(LH)	Z(ZL)	!I	0.0100	0.0010	0.1381	0.0347
EN(LH)	Z(ZH)	I	0.0100	0.0010	0.1386	0.0369
EN(HL)	Z(LZ)	!I	0.0100		0.2440	0.0000
EN(HL)	Z(HZ)	I	0.0100		0.2430	0.0000
I(HL)	Z(HL)	EN	0.0100	0.0010	0.2085	0.0361
I(LH)	Z(LH)	EN	0.0100	0.0010	0.1981	0.0366

DYNAMIC ENERGY

Input Pin	When Condition	Tin (ns)	Output	Out Load (pf)	Energy (uW/MHz)
I	EN	0.0100	Z(HL)	0.0010	0.7569
I	EN	0.0100	Z(LH)	0.0010	0.3242
EN(HL)	!I	0.0100	n/a	n/a	0.2266
EN(HL)	I	0.0100	n/a	n/a	0.3763
I(LH)	!EN	0.0100	n/a	n/a	-0.0754
EN	I	0.0100	Z(LH)	0.0010	0.3241
I(HL)	!EN	0.0100	n/a	n/a	0.0759
EN	!I	0.0100	Z(HL)	0.0010	0.4355

LEAKAGE POWER

When Condition	Power (nW)
!EN&!I	0.1791
!EN&I	0.1791
EN&!I	0.3085
EN&I	0.3074

gf180mcu_fd_sc_mcu7t5v0__bufz_8

gf180mcu_fd_sc_mcu7t5v0__bufz_8 symbol

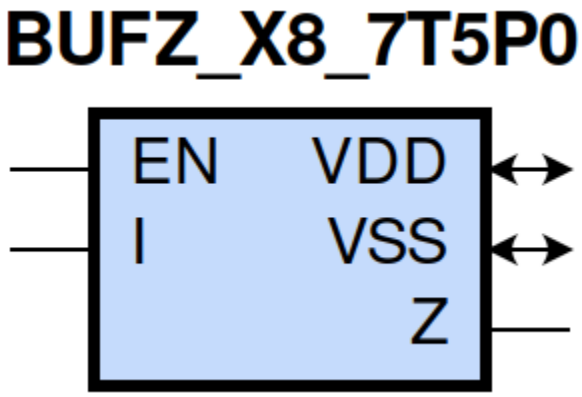

gf180mcu_fd_sc_mcu7t5v0__bufz_8 schematic

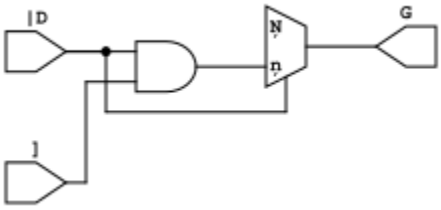

gf180mcu_fd_sc_mcu7t5v0__bufz_8 layout

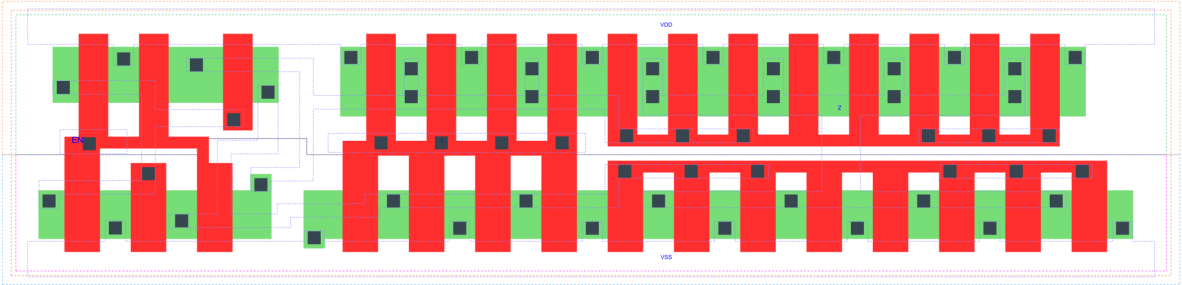

BUFZ_X8 is a tri-state buffer, 8X drive strength

Attributes

Attribute	Value
area	74.636800 μm^2

OUTPUT FUNCTIONS

Output Pin	Function
Z	I

TRUTH TABLE FOR Z

EN	I	Z
1	1	1
1	0	0
0	?	z

FUNCTIONAL SCHEMATIC

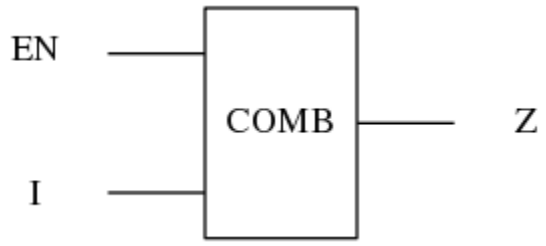

PIN CAPACITANCE (pf)

Pin	Type	Capacitance (pf)
EN	input	0.0084
I	input	0.0181

DELAY AND OUTPUT TRANSITION TIME corresponding to min slew and load

Input Pin	Output	When Condition	Tin (ns)	Out Load (pf)	Delay (ns)	Tout (ns)
EN(LH)	Z(ZL)	!I	0.0100	0.0010	0.1585	0.0398
EN(LH)	Z(ZH)	I	0.0100	0.0010	0.1774	0.0448
EN(HL)	Z(LZ)	!I	0.0100		0.3140	0.0000
EN(HL)	Z(HZ)	I	0.0100		0.4020	0.0000
I(HL)	Z(HL)	EN	0.0100	0.0010	0.2107	0.0384
I(LH)	Z(LH)	EN	0.0100	0.0010	0.2291	0.0426

DYNAMIC ENERGY

Input Pin	When Condition	Tin (ns)	Output	Out Load (pf)	Energy (uW/MHz)
I	EN	0.0100	Z(HL)	0.0010	1.2322
I	EN	0.0100	Z(LH)	0.0010	0.6075
EN(HL)	!I	0.0100	n/a	n/a	0.2248
EN(HL)	I	0.0100	n/a	n/a	0.4576
I(LH)	!EN	0.0100	n/a	n/a	-0.1508
EN	I	0.0100	Z(LH)	0.0010	0.6383
I(HL)	!EN	0.0100	n/a	n/a	0.1515
EN	!I	0.0100	Z(HL)	0.0010	0.7291

LEAKAGE POWER

When Condition	Power (nW)
!EN&!I	0.2308
!EN&I	0.2308
EN&!I	0.4653
EN&I	0.4621

gf180mcu_fd_sc_mcu7t5v0__clkbuf_1

gf180mcu_fd_sc_mcu7t5v0__clkbuf_1 symbol

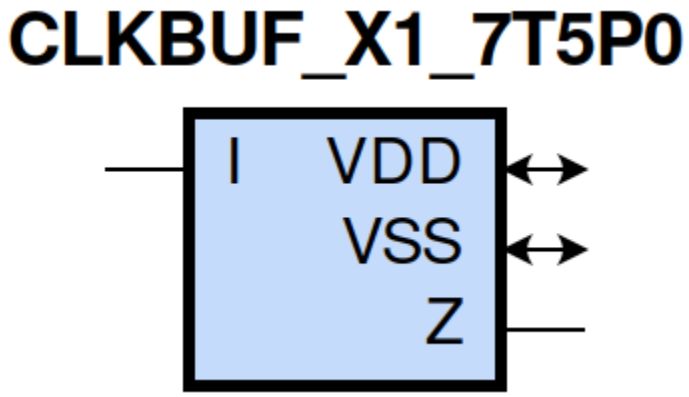

gf180mcu_fd_sc_mcu7t5v0__clkbuf_1 schematic

gf180mcu_fd_sc_mcu7t5v0__clkbuf_1 layout

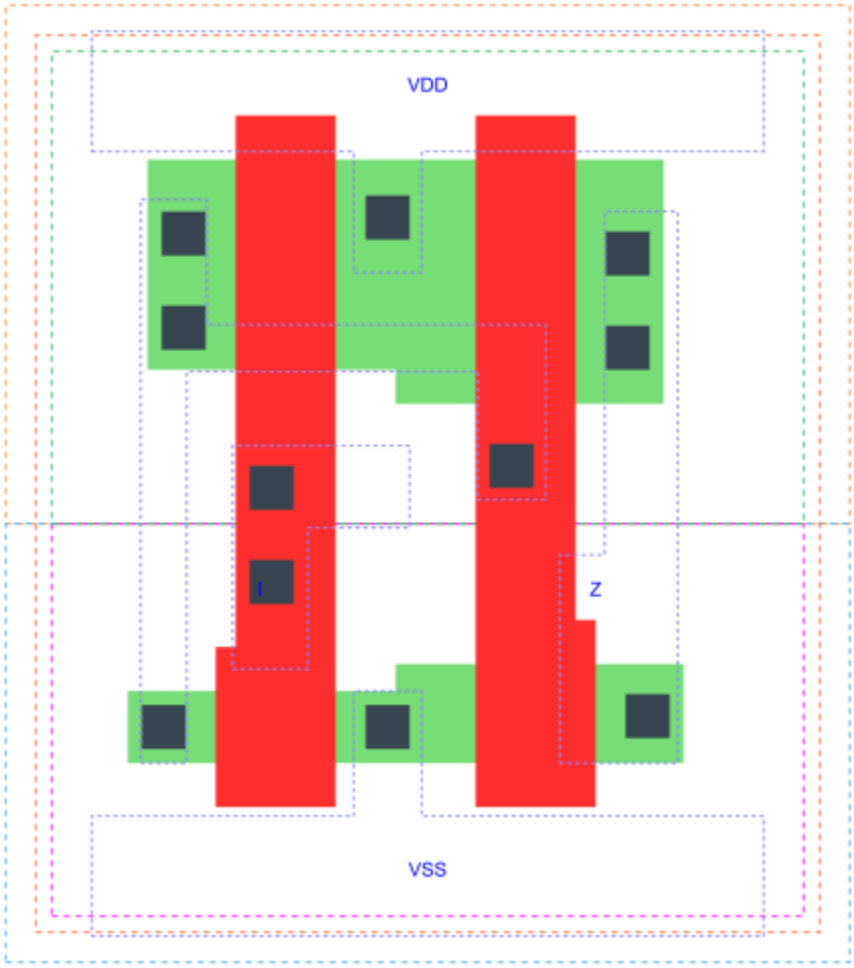

CLKBUF_X1 is a clock buffer, 1X drive strength

Attributes

Attribute	Value
area	13.171200 μm^2

OUTPUT FUNCTIONS

Output Pin	Function
Z	I

TRUTH TABLE FOR Z

I	Z
1	1
0	0

FUNCTIONAL SCHEMATIC

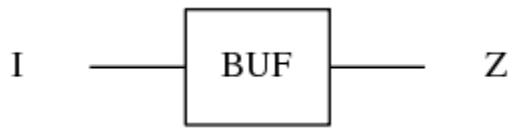

PIN CAPACITANCE (pf)

Pin	Type	Capacitance (pf)
I	input	0.0036

DELAY AND OUTPUT TRANSITION TIME corresponding to min slew and load

Input Pin	Output	When Condition	Tin (ns)	Out Load (pf)	Delay (ns)	Tout (ns)
I(LH)	Z(LH)	default	0.0100	0.0010	0.1522	0.0383
I(HL)	Z(HL)	default	0.0100	0.0010	0.1414	0.0360

DYNAMIC ENERGY

Input Pin	When Condition	Tin (ns)	Output	Out Load (pf)	Energy (uW/MHz)
I	default	0.0100	Z(LH)	0.0010	0.0900
I	default	0.0100	Z(HL)	0.0010	0.1647

LEAKAGE POWER

When Condition	Power (nW)
!I	0.1041
I	0.1020

gf180mcu_fd_sc_mcu7t5v0__clkbuf_x12

gf180mcu_fd_sc_mcu7t5v0__clkbuf_x12 symbol

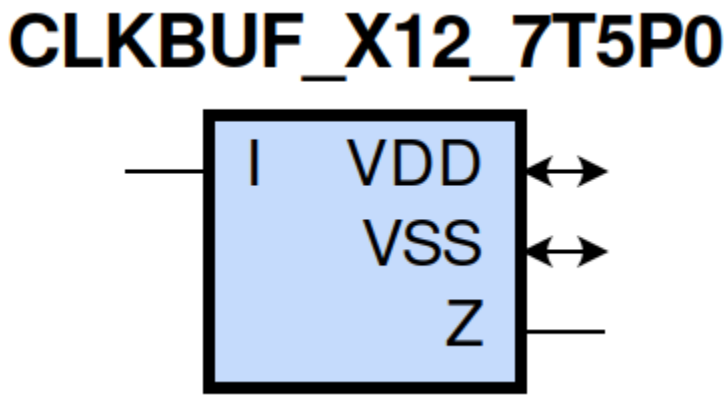

gf180mcu_fd_sc_mcu7t5v0__clkbuf_x12 schematic

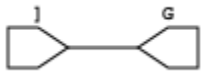

gf180mcu_fd_sc_mcu7t5v0__clkbuf_x12 layout

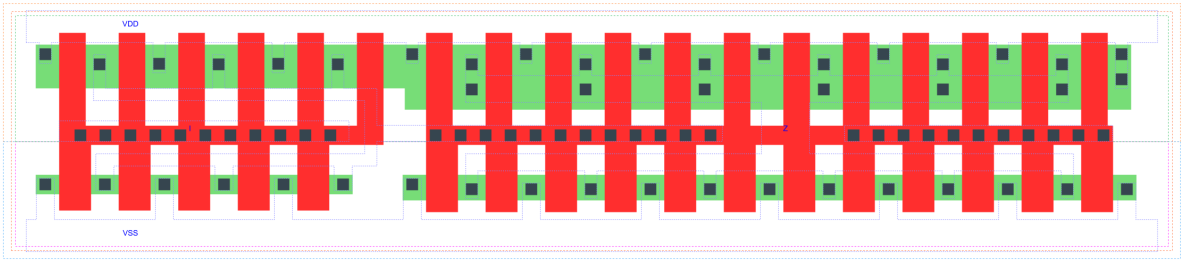

CLKBUF_X12 is a clock buffer, 12X drive strength

Attributes

Attribute	Value
area	83.417600 μm^2

OUTPUT FUNCTIONS

Output Pin	Function
Z	I

TRUTH TABLE FOR Z

I	Z
1	1
0	0

FUNCTIONAL SCHEMATIC

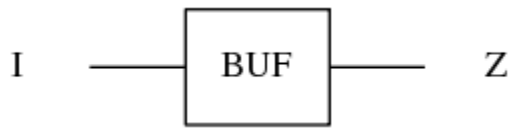

PIN CAPACITANCE (pf)

Pin	Type	Capacitance (pf)
I	input	0.0169

DELAY AND OUTPUT TRANSITION TIME corresponding to min slew and load

Input Pin	Output	When Condition	Tin (ns)	Out Load (pf)	Delay (ns)	Tout (ns)
I(LH)	Z(LH)	default	0.0100	0.0010	0.1862	0.0342
I(HL)	Z(HL)	default	0.0100	0.0010	0.1799	0.0329

DYNAMIC ENERGY

Input Pin	When Condition	Tin (ns)	Output	Out Load (pf)	Energy (uW/MHz)
I	default	0.0100	Z(LH)	0.0010	1.1143
I	default	0.0100	Z(HL)	0.0010	1.4233

LEAKAGE POWER

When Condition	Power (nW)
!I	0.5046
I	0.5156

gf180mcu_fd_sc_mcu7t5v0__clkbuf_x16

gf180mcu_fd_sc_mcu7t5v0__clkbuf_x16 symbol

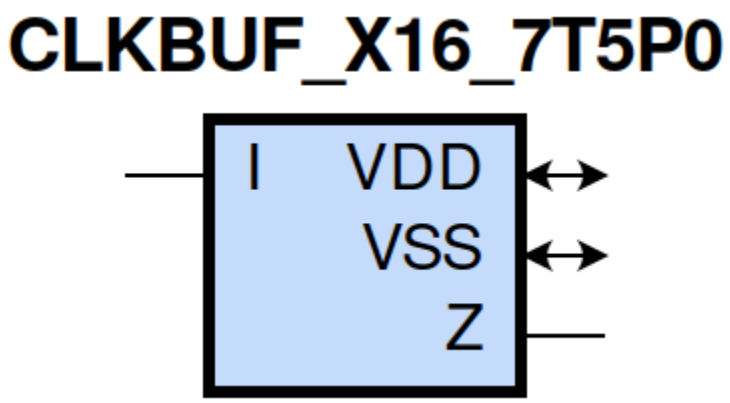

gf180mcu_fd_sc_mcu7t5v0__clkbuf_x16 schematic

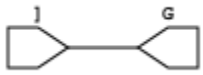

gf180mcu_fd_sc_mcu7t5v0__clkbuf_x16 layout

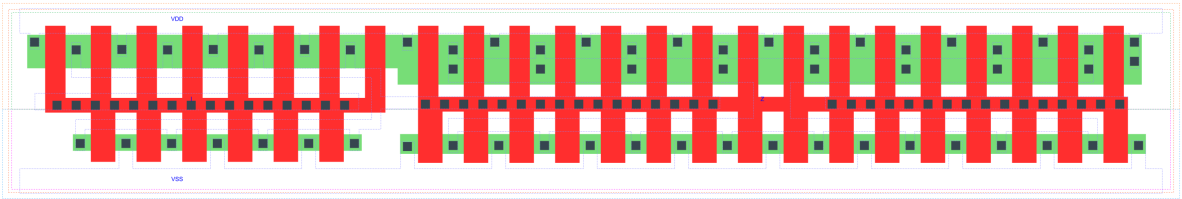

CLKBUF_X16 is a clock buffer, 16X drive strength

Attributes

Attribute	Value
area	109.760000 μm^2

OUTPUT FUNCTIONS

Output Pin	Function
Z	I

TRUTH TABLE FOR Z

I	Z
1	1
0	0

FUNCTIONAL SCHEMATIC

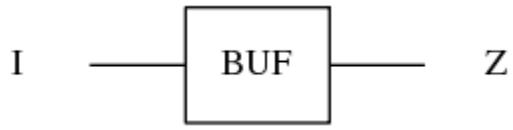

PIN CAPACITANCE (pf)

Pin	Type	Capacitance (pf)
I	input	0.0224

DELAY AND OUTPUT TRANSITION TIME corresponding to min slew and load

Input Pin	Output	When Condition	Tin (ns)	Out Load (pf)	Delay (ns)	Tout (ns)
I(LH)	Z(LH)	default	0.0100	0.0010	0.1923	0.0351
I(HL)	Z(HL)	default	0.0100	0.0010	0.1813	0.0333

DYNAMIC ENERGY

Input Pin	When Condition	Tin (ns)	Output	Out Load (pf)	Energy (uW/MHz)
I	default	0.0100	Z(LH)	0.0010	1.5199
I	default	0.0100	Z(HL)	0.0010	1.9174

LEAKAGE POWER

When Condition	Power (nW)
!I	0.6315
I	0.6705

gf180mcu_fd_sc_mcu7t5v0__clkbuf_2

gf180mcu_fd_sc_mcu7t5v0__clkbuf_2 symbol

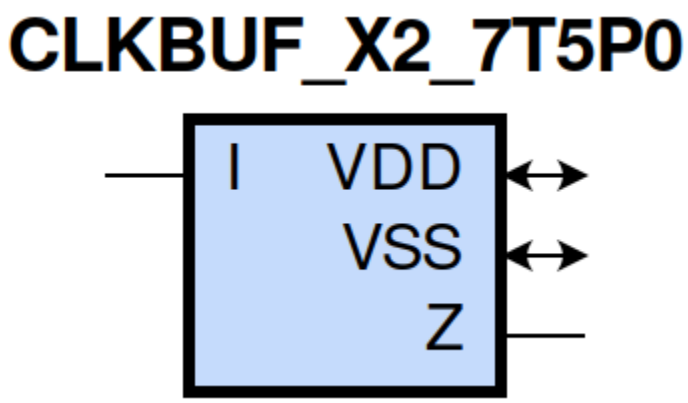

gf180mcu_fd_sc_mcu7t5v0__clkbuf_2 schematic

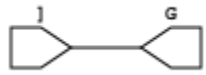

gf180mcu_fd_sc_mcu7t5v0__clkbuf_2 layout

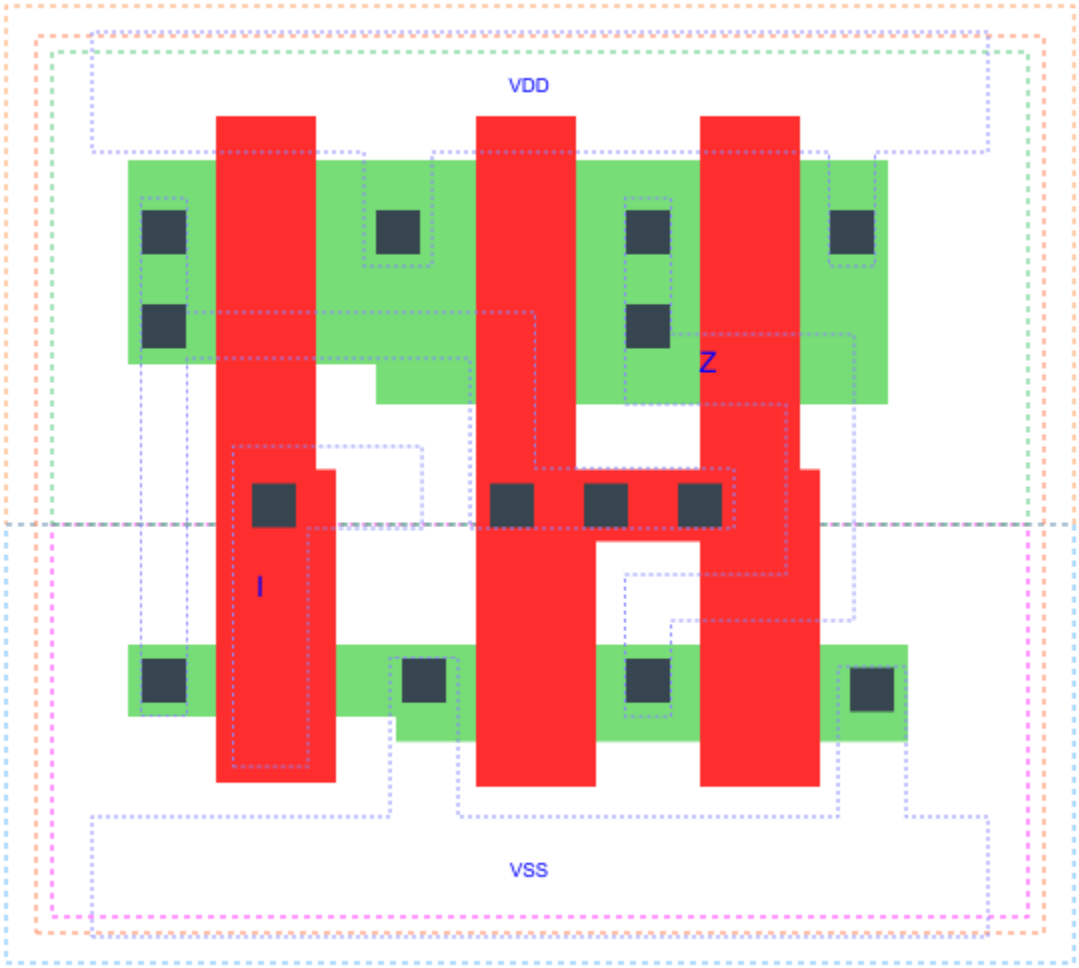

CLKBUF_X2 is a clock buffer, 2X drive strength

Attributes

Attribute	Value
area	17.561600 μm^2

OUTPUT FUNCTIONS

Output Pin	Function
Z	I

TRUTH TABLE FOR Z

I	Z
1	1
0	0

FUNCTIONAL SCHEMATIC

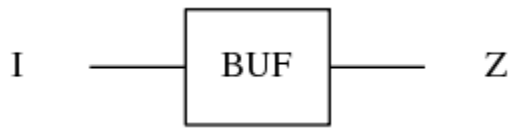

PIN CAPACITANCE (pf)

Pin	Type	Capacitance (pf)
I	input	0.0037

DELAY AND OUTPUT TRANSITION TIME corresponding to min slew and load

Input Pin	Output	When Condition	Tin (ns)	Out Load (pf)	Delay (ns)	Tout (ns)
I(LH)	Z(LH)	default	0.0100	0.0010	0.1834	0.0352
I(HL)	Z(HL)	default	0.0100	0.0010	0.1698	0.0333

DYNAMIC ENERGY

Input Pin	When Condition	Tin (ns)	Output	Out Load (pf)	Energy (uW/MHz)
I	default	0.0100	Z(LH)	0.0010	0.1795
I	default	0.0100	Z(HL)	0.0010	0.2507

LEAKAGE POWER

When Condition	Power (nW)
!I	0.1306
I	0.1277

gf180mcu_fd_sc_mcu7t5v0__clkbuf_x20

gf180mcu_fd_sc_mcu7t5v0__clkbuf_x20 symbol

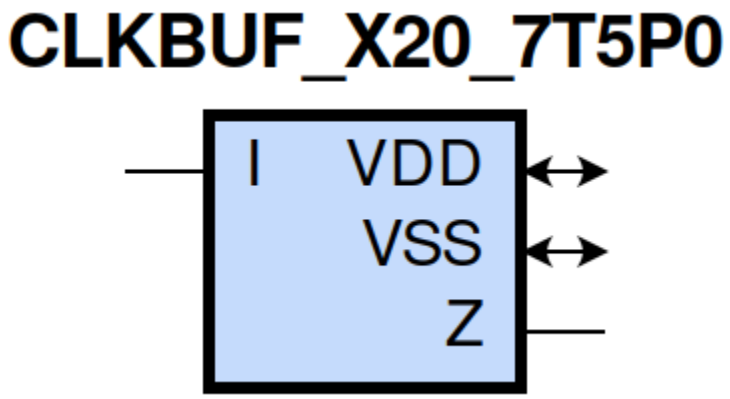

gf180mcu_fd_sc_mcu7t5v0__clkbuf_x20 schematic

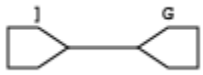

gf180mcu_fd_sc_mcu7t5v0__clkbuf_x20 layout

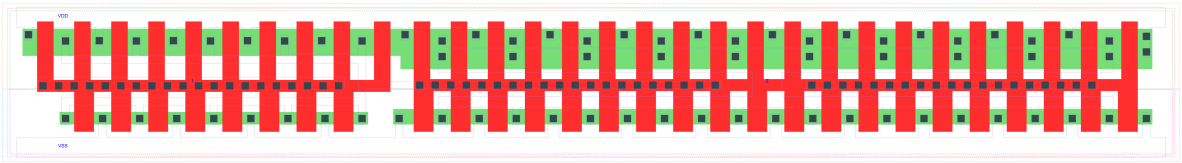

CLKBUF_X20 is a clock buffer, 20X drive strength

Attributes

Attribute	Value
area	136.102400 μm^2

OUTPUT FUNCTIONS

Output Pin	Function
Z	I

TRUTH TABLE FOR Z

I	Z
1	1
0	0

FUNCTIONAL SCHEMATIC

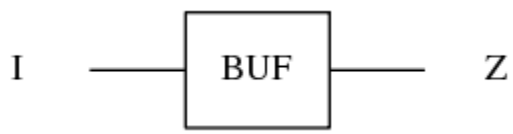

PIN CAPACITANCE (pf)

Pin	Type	Capacitance (pf)
I	input	0.0280

DELAY AND OUTPUT TRANSITION TIME corresponding to min slew and load

Input Pin	Output	When Condition	Tin (ns)	Out Load (pf)	Delay (ns)	Tout (ns)
I(LH)	Z(LH)	default	0.0100	0.0010	0.1898	0.0352
I(HL)	Z(HL)	default	0.0100	0.0010	0.1834	0.0339

DYNAMIC ENERGY

Input Pin	When Condition	Tin (ns)	Output	Out Load (pf)	Energy (uW/MHz)
I	default	0.0100	Z(LH)	0.0010	1.8965
I	default	0.0100	Z(HL)	0.0010	2.3819

LEAKAGE POWER

When Condition	Power (nW)
!I	0.7944
I	0.8268

gf180mcu_fd_sc_mcu7t5v0__clkbuf_3

gf180mcu_fd_sc_mcu7t5v0__clkbuf_3 symbol

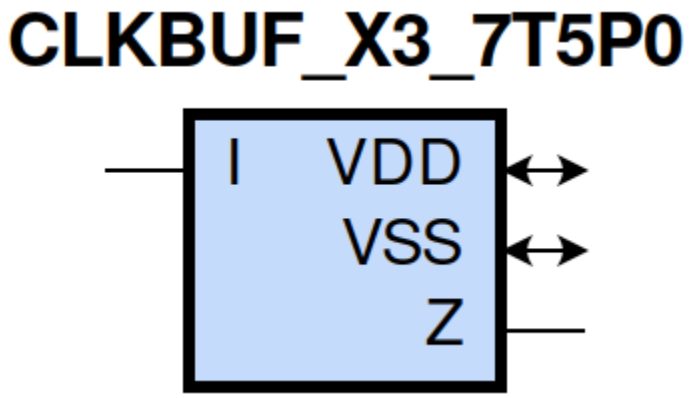

gf180mcu_fd_sc_mcu7t5v0__clkbuf_3 schematic

gf180mcu_fd_sc_mcu7t5v0__clkbuf_3 layout

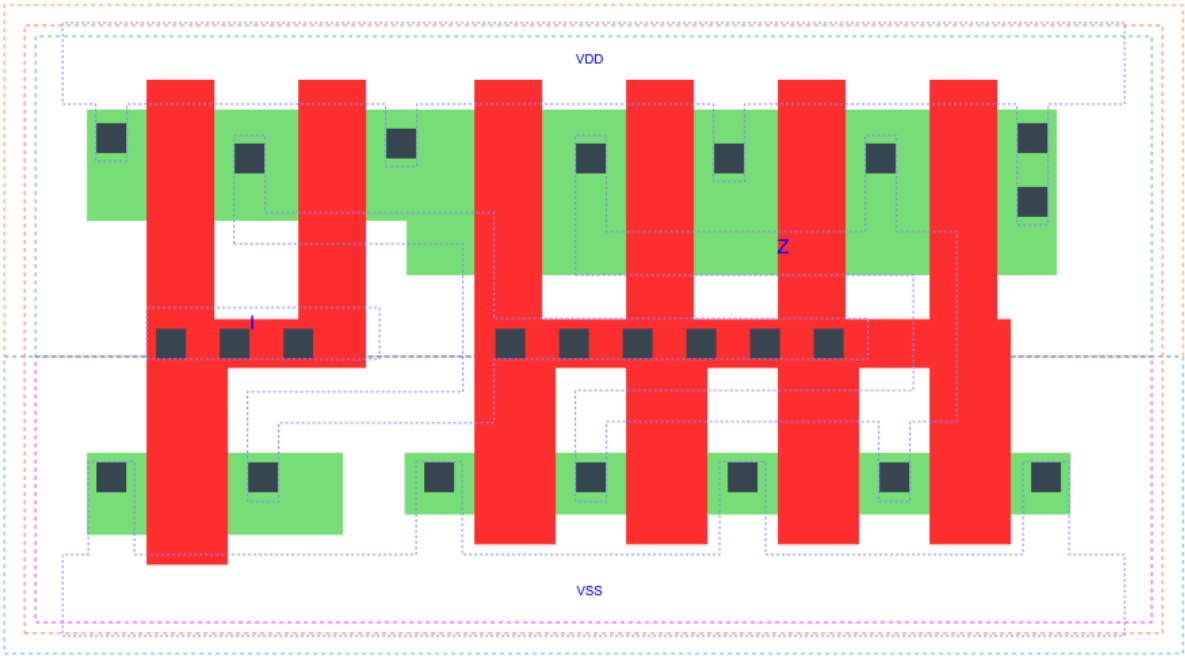

CLKBUF_X3 is a clock buffer, 3X drive strength

Attributes

Attribute	Value
area	30.732800 μm^2

OUTPUT FUNCTIONS

Output Pin	Function
Z	I

TRUTH TABLE FOR Z

I	Z
1	1
0	0

FUNCTIONAL SCHEMATIC

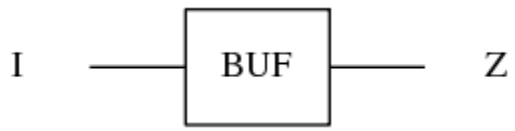

PIN CAPACITANCE (pf)

Pin	Type	Capacitance (pf)
I	input	0.0055

DELAY AND OUTPUT TRANSITION TIME corresponding to min slew and load

Input Pin	Output	When Condition	Tin (ns)	Out Load (pf)	Delay (ns)	Tout (ns)
I(LH)	Z(LH)	default	0.0100	0.0010	0.2003	0.0367
I(HL)	Z(HL)	default	0.0100	0.0010	0.1835	0.0339

DYNAMIC ENERGY

Input Pin	When Condition	Tin (ns)	Output	Out Load (pf)	Energy (uW/MHz)
I	default	0.0100	Z(LH)	0.0010	0.3676
I	default	0.0100	Z(HL)	0.0010	0.4736

LEAKAGE POWER

When Condition	Power (nW)
!I	0.1814
I	0.2057

gf180mcu_fd_sc_mcu7t5v0__clkbuf_4

gf180mcu_fd_sc_mcu7t5v0__clkbuf_4 symbol

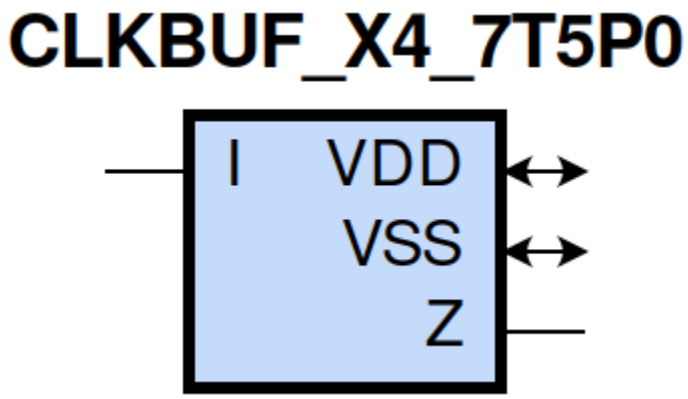

gf180mcu_fd_sc_mcu7t5v0__clkbuf_4 schematic

gf180mcu_fd_sc_mcu7t5v0__clkbuf_4 layout

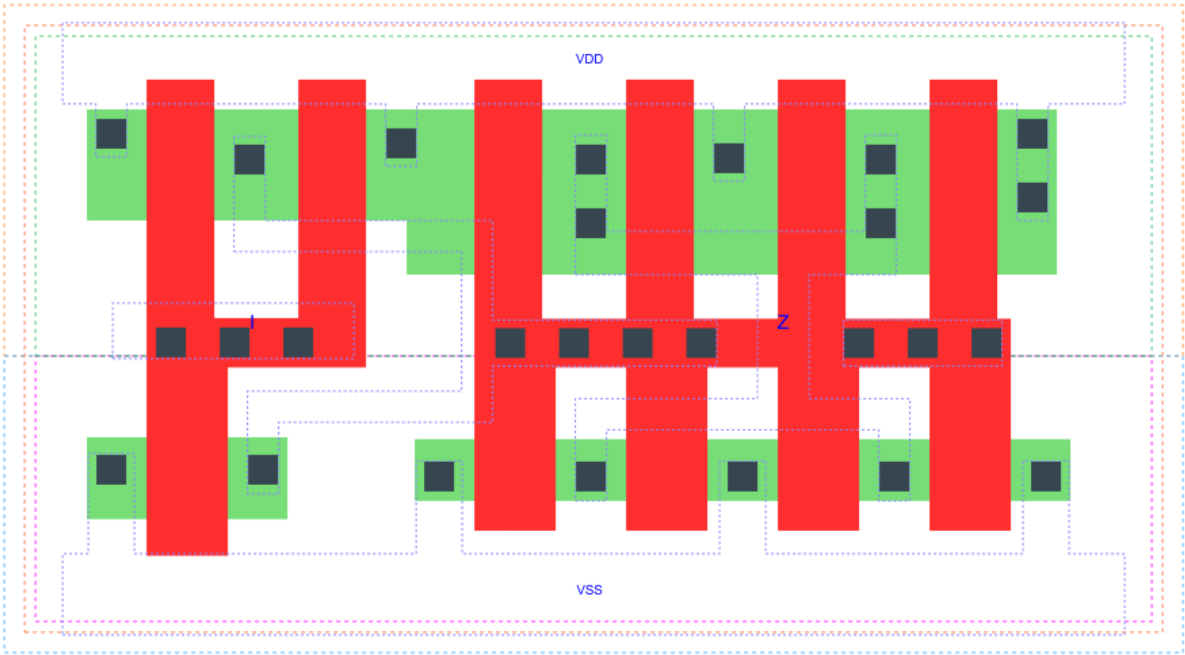

CLKBUF_X4 is a clock buffer, 4X drive strength

Attributes

Attribute	Value
area	30.732800 μm^2

OUTPUT FUNCTIONS

Output Pin	Function
Z	I

TRUTH TABLE FOR Z

I	Z
1	1
0	0

FUNCTIONAL SCHEMATIC

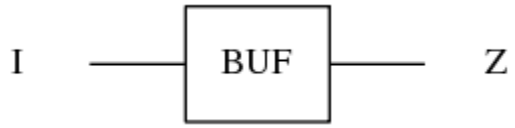

PIN CAPACITANCE (pf)

Pin	Type	Capacitance (pf)
I	input	0.0055

DELAY AND OUTPUT TRANSITION TIME corresponding to min slew and load

Input Pin	Output	When Condition	Tin (ns)	Out Load (pf)	Delay (ns)	Tout (ns)
I(LH)	Z(LH)	default	0.0100	0.0010	0.1968	0.0359
I(HL)	Z(HL)	default	0.0100	0.0010	0.1803	0.0333

DYNAMIC ENERGY

Input Pin	When Condition	Tin (ns)	Output	Out Load (pf)	Energy (uW/MHz)
I	default	0.0100	Z(LH)	0.0010	0.3625
I	default	0.0100	Z(HL)	0.0010	0.4629

LEAKAGE POWER

When Condition	Power (nW)
!I	0.1814
I	0.2057

gf180mcu_fd_sc_mcu7t5v0__clkbuf_8

gf180mcu_fd_sc_mcu7t5v0__clkbuf_8 symbol

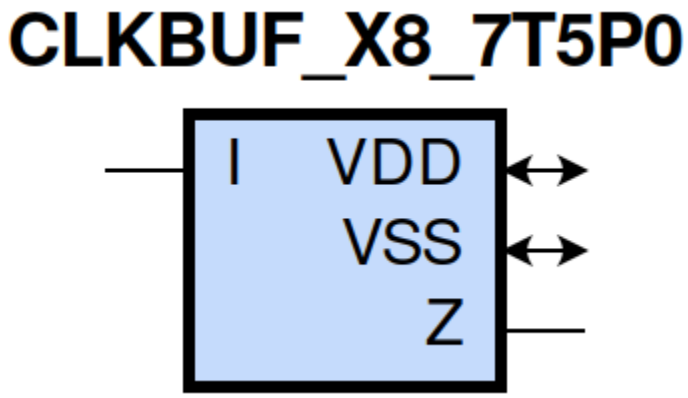

gf180mcu_fd_sc_mcu7t5v0__clkbuf_8 schematic

gf180mcu_fd_sc_mcu7t5v0__clkbuf_8 layout

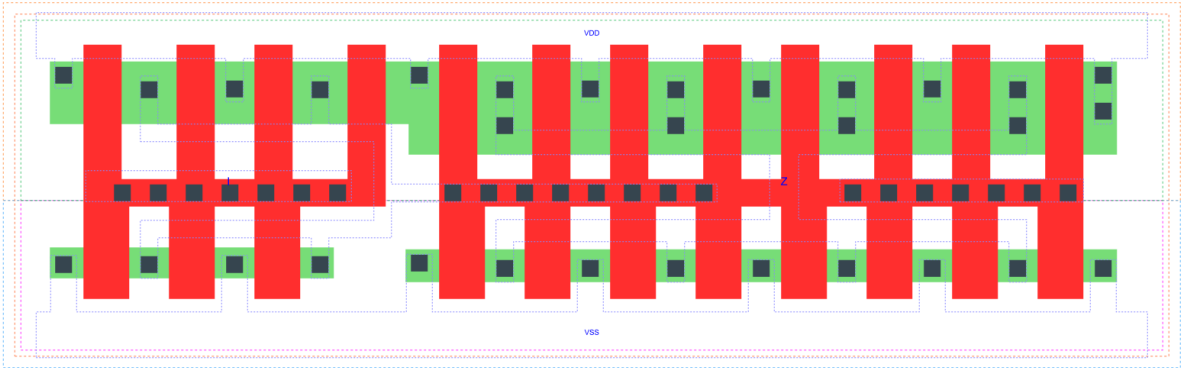

CLKBUF_X8 is a clock buffer, 8X drive strength

Attributes

Attribute	Value
area	57.075200 μm^2

OUTPUT FUNCTIONS

Output Pin	Function
Z	I

TRUTH TABLE FOR Z

I	Z
1	1
0	0

FUNCTIONAL SCHEMATIC

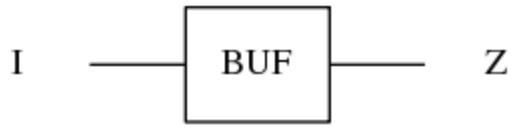

PIN CAPACITANCE (pf)

Pin	Type	Capacitance (pf)
I	input	0.0112

DELAY AND OUTPUT TRANSITION TIME corresponding to min slew and load

Input Pin	Output	When Condition	Tin (ns)	Out Load (pf)	Delay (ns)	Tout (ns)
I(LH)	Z(LH)	default	0.0100	0.0010	0.1853	0.0347
I(HL)	Z(HL)	default	0.0100	0.0010	0.1825	0.0336

DYNAMIC ENERGY

Input Pin	When Condition	Tin (ns)	Output	Out Load (pf)	Energy (uW/MHz)
I	default	0.0100	Z(LH)	0.0010	0.7182
I	default	0.0100	Z(HL)	0.0010	0.9260

LEAKAGE POWER

When Condition	Power (nW)
!I	0.3408
I	0.3628

gf180mcu_fd_sc_mcu7t5v0__clkinv_1

gf180mcu_fd_sc_mcu7t5v0__clkinv_1 symbol

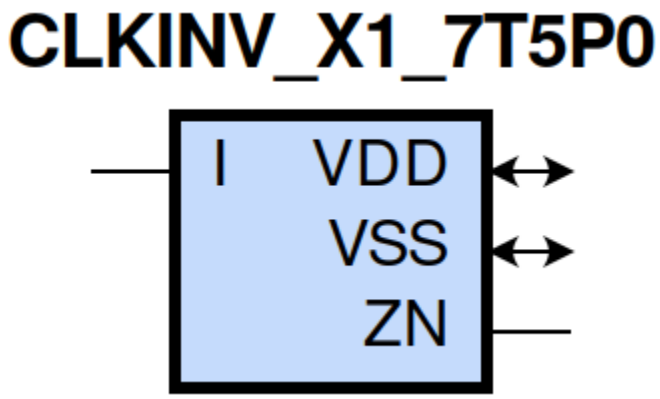

gf180mcu_fd_sc_mcu7t5v0__clkinv_1 schematic

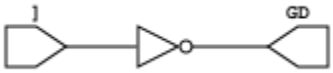

gf180mcu_fd_sc_mcu7t5v0__clkinv_1 layout

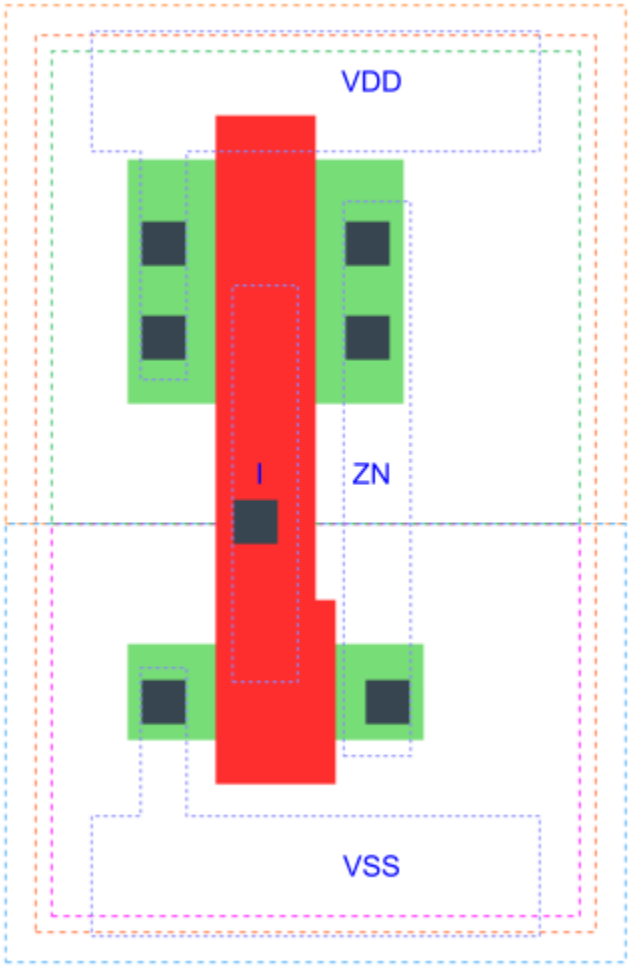

CLKINV_X1 is a clock inverter, 1X drive strength

Attributes

Attribute	Value
area	8.780800 μm^2

OUTPUT FUNCTIONS

Output Pin	Function
ZN	(!I)

TRUTH TABLE FOR ZN

I	ZN
0	1
1	0

FUNCTIONAL SCHEMATIC

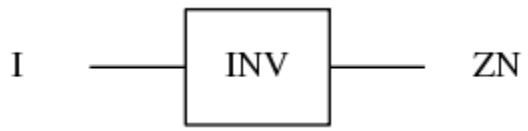

PIN CAPACITANCE (pf)

Pin	Type	Capacitance (pf)
I	input	0.0042

DELAY AND OUTPUT TRANSITION TIME corresponding to min slew and load

Input Pin	Output	When Condition	Tin (ns)	Out Load (pf)	Delay (ns)	Tout (ns)
I(LH)	ZN(HL)	default	0.0100	0.0010	0.0530	0.0279
I(HL)	ZN(LH)	default	0.0100	0.0010	0.0447	0.0308

DYNAMIC ENERGY

Input Pin	When Condition	Tin (ns)	Output	Out Load (pf)	Energy (uW/MHz)
I	default	0.0100	ZN(HL)	0.0010	-0.0023
I	default	0.0100	ZN(LH)	0.0010	0.0846

LEAKAGE POWER

When Condition	Power (nW)
!I	0.0757
I	0.0765

gf180mcu_fd_sc_mcu7t5v0__clkinv_x12

gf180mcu_fd_sc_mcu7t5v0__clkinv_x12 symbol

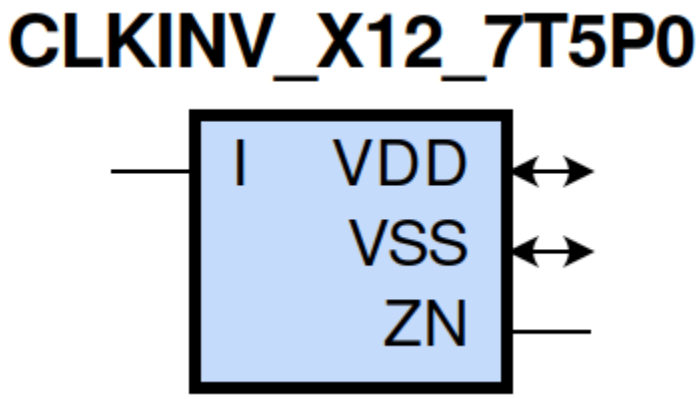

gf180mcu_fd_sc_mcu7t5v0__clkinv_x12 schematic

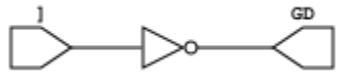

gf180mcu_fd_sc_mcu7t5v0__clkinv_x12 layout

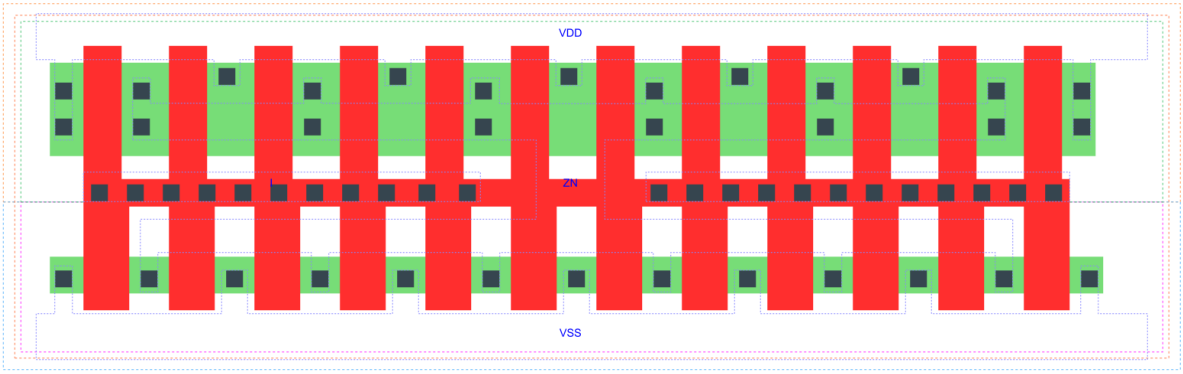

CLKINV_X12 is a clock inverter, 12X drive strength | | Attributes

Attribute	Value
area	57.075200 μm^2

OUTPUT FUNCTIONS

Output Pin	Function
ZN	(!I)

TRUTH TABLE FOR ZN

I	ZN
0	1
1	0

FUNCTIONAL SCHEMATIC

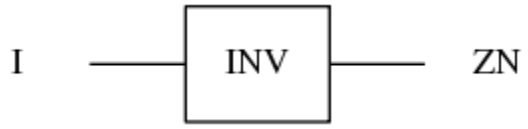

PIN CAPACITANCE (pf)

Pin	Type	Capacitance (pf)
I	input	0.0471

DELAY AND OUTPUT TRANSITION TIME corresponding to min slew and load

Input Pin	Output	When Condition	Tin (ns)	Out Load (pf)	Delay (ns)	Tout (ns)
I(LH)	ZN(HL)	default	0.0100	0.0010	0.0379	0.0158
I(HL)	ZN(LH)	default	0.0100	0.0010	0.0304	0.0182

DYNAMIC ENERGY

Input Pin	When Condition	Tin (ns)	Output	Out Load (pf)	Energy (uW/MHz)
I	default	0.0100	ZN(HL)	0.0010	-0.1286
I	default	0.0100	ZN(LH)	0.0010	0.9119

LEAKAGE POWER

When Condition	Power (nW)
!I	0.3581
I	0.3679

gf180mcu_fd_sc_mcu7t5v0__clkinv_x16

gf180mcu_fd_sc_mcu7t5v0__clkinv_x16 symbol

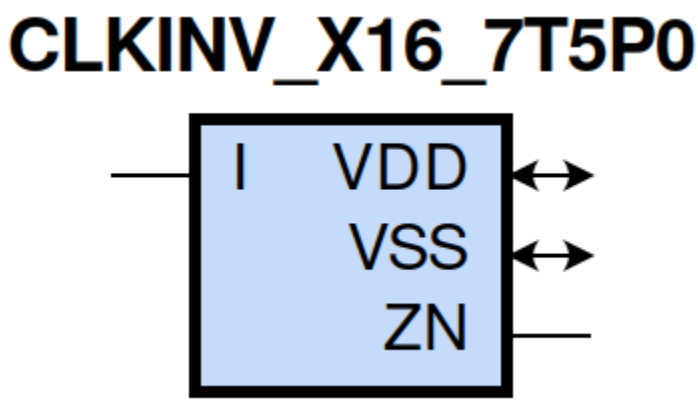

gf180mcu_fd_sc_mcu7t5v0__clkinv_x16 schematic

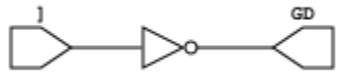

gf180mcu_fd_sc_mcu7t5v0__clkinv_x16 layout

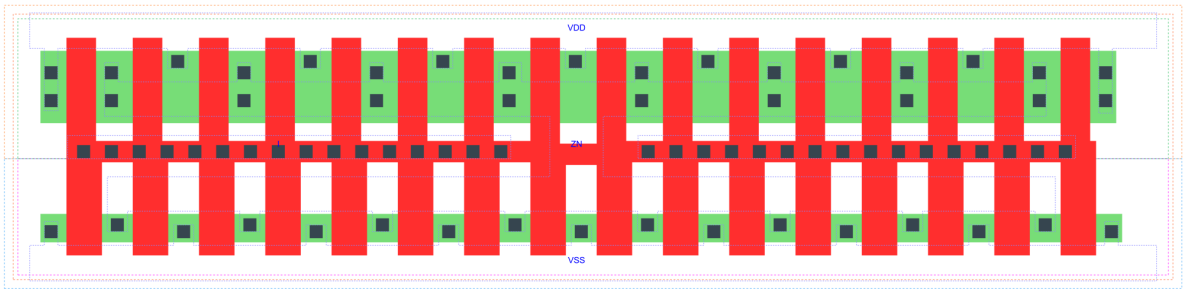

CLKINV_X16 is a clock inverter, 16X drive strength | | Attributes

Attribute	Value
area	74.636800 μm^2

OUTPUT FUNCTIONS

Output Pin	Function
ZN	(!I)

TRUTH TABLE FOR ZN

I	ZN
0	1
1	0

FUNCTIONAL SCHEMATIC

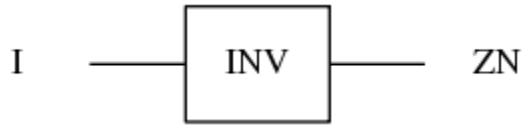

PIN CAPACITANCE (pf)

Pin	Type	Capacitance (pf)
I	input	0.0633

DELAY AND OUTPUT TRANSITION TIME corresponding to min slew and load

Input Pin	Output	When Condition	Tin (ns)	Out Load (pf)	Delay (ns)	Tout (ns)
I(LH)	ZN(HL)	default	0.0100	0.0010	0.0385	0.0161
I(HL)	ZN(LH)	default	0.0100	0.0010	0.0309	0.0185

DYNAMIC ENERGY

Input Pin	When Condition	Tin (ns)	Output	Out Load (pf)	Energy (uW/MHz)
I	default	0.0100	ZN(HL)	0.0010	-0.1716
I	default	0.0100	ZN(LH)	0.0010	1.2367

LEAKAGE POWER

When Condition	Power (nW)
!I	0.4608
I	0.4739

gf180mcu_fd_sc_mcu7t5v0__clkinv_2

gf180mcu_fd_sc_mcu7t5v0__clkinv_2 symbol

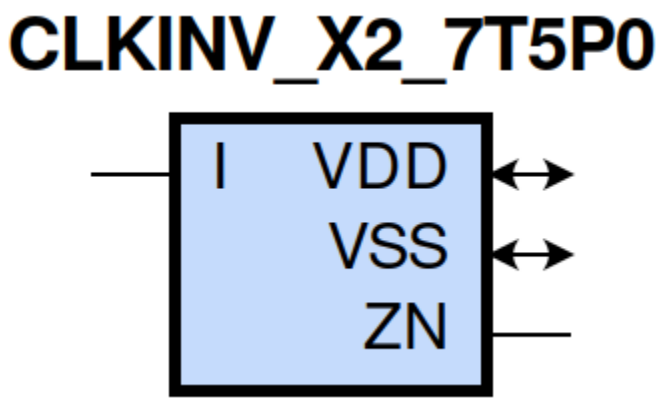

gf180mcu_fd_sc_mcu7t5v0__clkinv_2 schematic

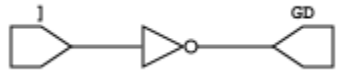

gf180mcu_fd_sc_mcu7t5v0__clkinv_2 layout

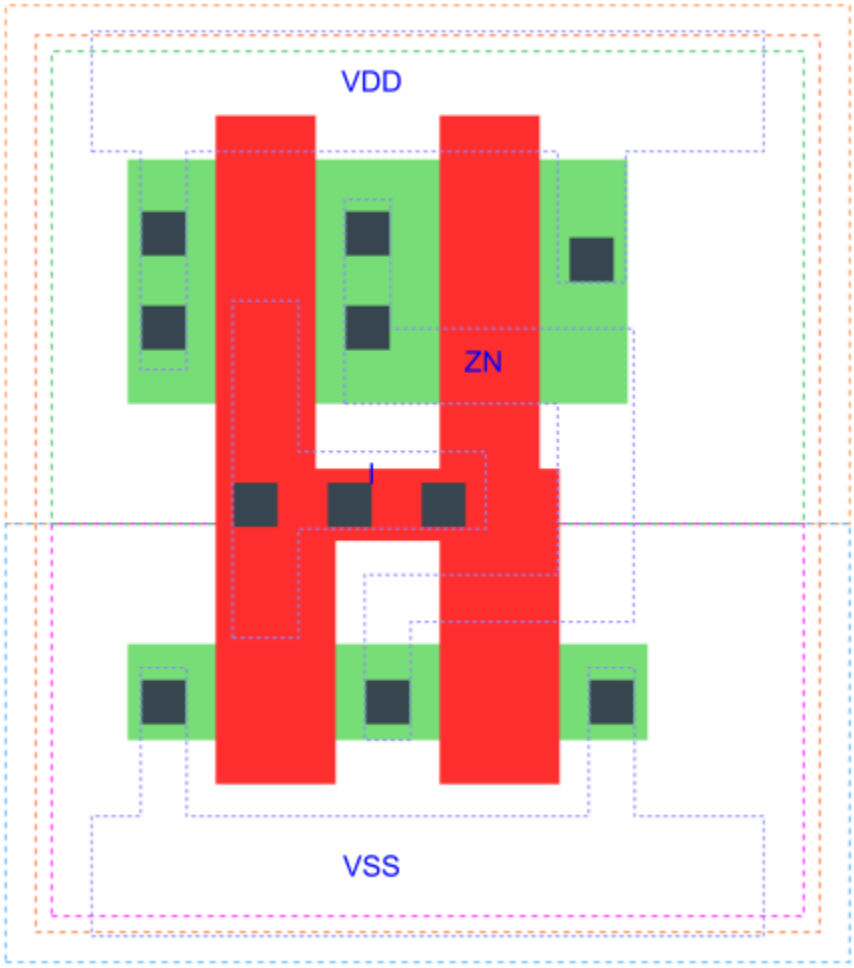

CLKINV_X2 is a clock inverter, 2X drive strength

Attributes

Attribute	Value
area	13.171200 μm^2

OUTPUT FUNCTIONS

Output Pin	Function
ZN	(!I)

TRUTH TABLE FOR ZN

I	ZN
0	1
1	0

FUNCTIONAL SCHEMATIC

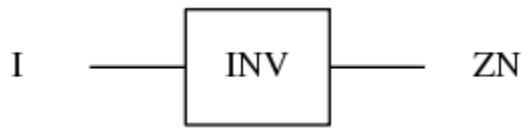

PIN CAPACITANCE (pf)

Pin	Type	Capacitance (pf)
I	input	0.0080

DELAY AND OUTPUT TRANSITION TIME corresponding to min slew and load

Input Pin	Output	When Condition	Tin (ns)	Out Load (pf)	Delay (ns)	Tout (ns)
I(LH)	ZN(HL)	default	0.0100	0.0010	0.0414	0.0188
I(HL)	ZN(LH)	default	0.0100	0.0010	0.0335	0.0212

DYNAMIC ENERGY

Input Pin	When Condition	Tin (ns)	Output	Out Load (pf)	Energy (uW/MHz)
I	default	0.0100	ZN(HL)	0.0010	-0.0206
I	default	0.0100	ZN(LH)	0.0010	0.1509

LEAKAGE POWER

When Condition	Power (nW)
!I	0.1014
I	0.1030

gf180mcu_fd_sc_mcu7t5v0__clkinv_x20

gf180mcu_fd_sc_mcu7t5v0__clkinv_x20 symbol

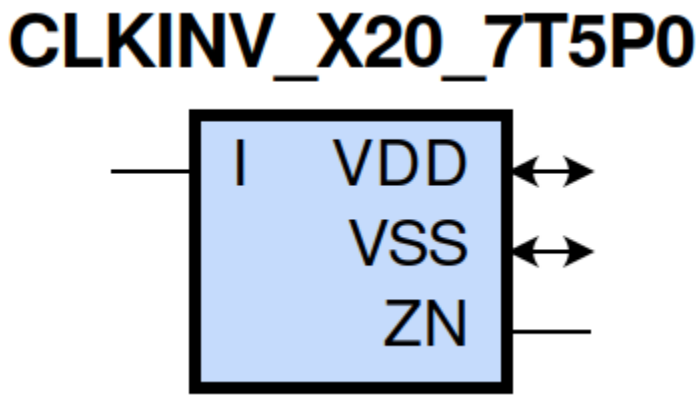

gf180mcu_fd_sc_mcu7t5v0__clkinv_x20 schematic

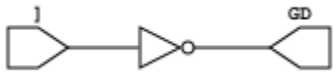

gf180mcu_fd_sc_mcu7t5v0__clkinv_x20 layout

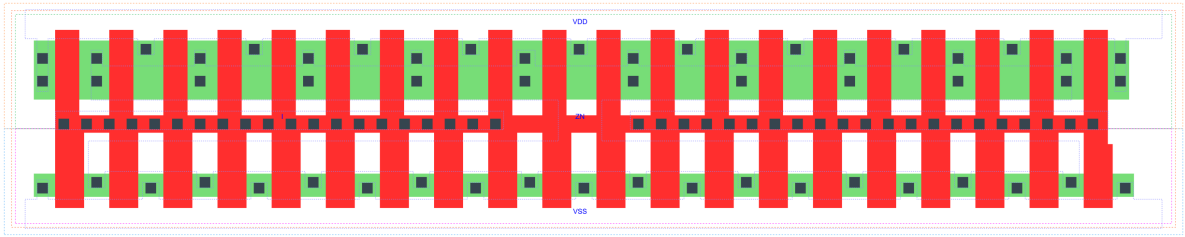

CLKINV_X20 is a clock inverter, 20X drive strength | | Attributes

Attribute	Value
area	92.198400 μm^2

OUTPUT FUNCTIONS

Output Pin	Function
ZN	(!I)

TRUTH TABLE FOR ZN

I	ZN
0	1
1	0

FUNCTIONAL SCHEMATIC

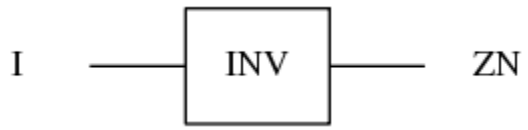

PIN CAPACITANCE (pf)

Pin	Type	Capacitance (pf)
I	input	0.0801

DELAY AND OUTPUT TRANSITION TIME corresponding to min slew and load

Input Pin	Output	When Condition	Tin (ns)	Out Load (pf)	Delay (ns)	Tout (ns)
I(LH)	ZN(HL)	default	0.0100	0.0010	0.0393	0.0166
I(HL)	ZN(LH)	default	0.0100	0.0010	0.0317	0.0190

DYNAMIC ENERGY

Input Pin	When Condition	Tin (ns)	Output	Out Load (pf)	Energy (uW/MHz)
I	default	0.0100	ZN(HL)	0.0010	-0.2132
I	default	0.0100	ZN(LH)	0.0010	1.5822

LEAKAGE POWER

When Condition	Power (nW)
!I	0.5635
I	0.5799

gf180mcu_fd_sc_mcu7t5v0__clkinv_3

gf180mcu_fd_sc_mcu7t5v0__clkinv_3 symbol

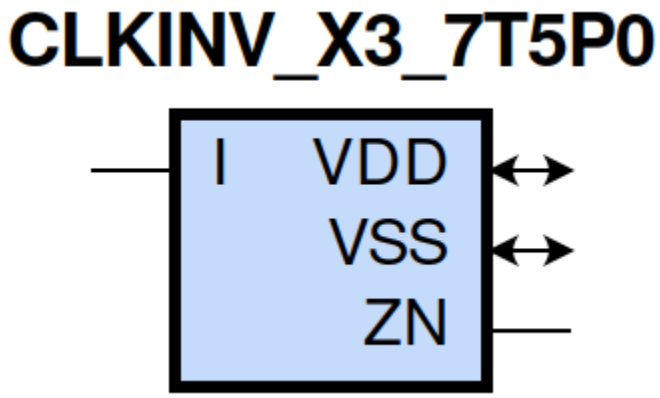

gf180mcu_fd_sc_mcu7t5v0__clkinv_3 schematic

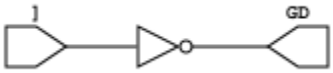

gf180mcu_fd_sc_mcu7t5v0__clkinv_3 layout

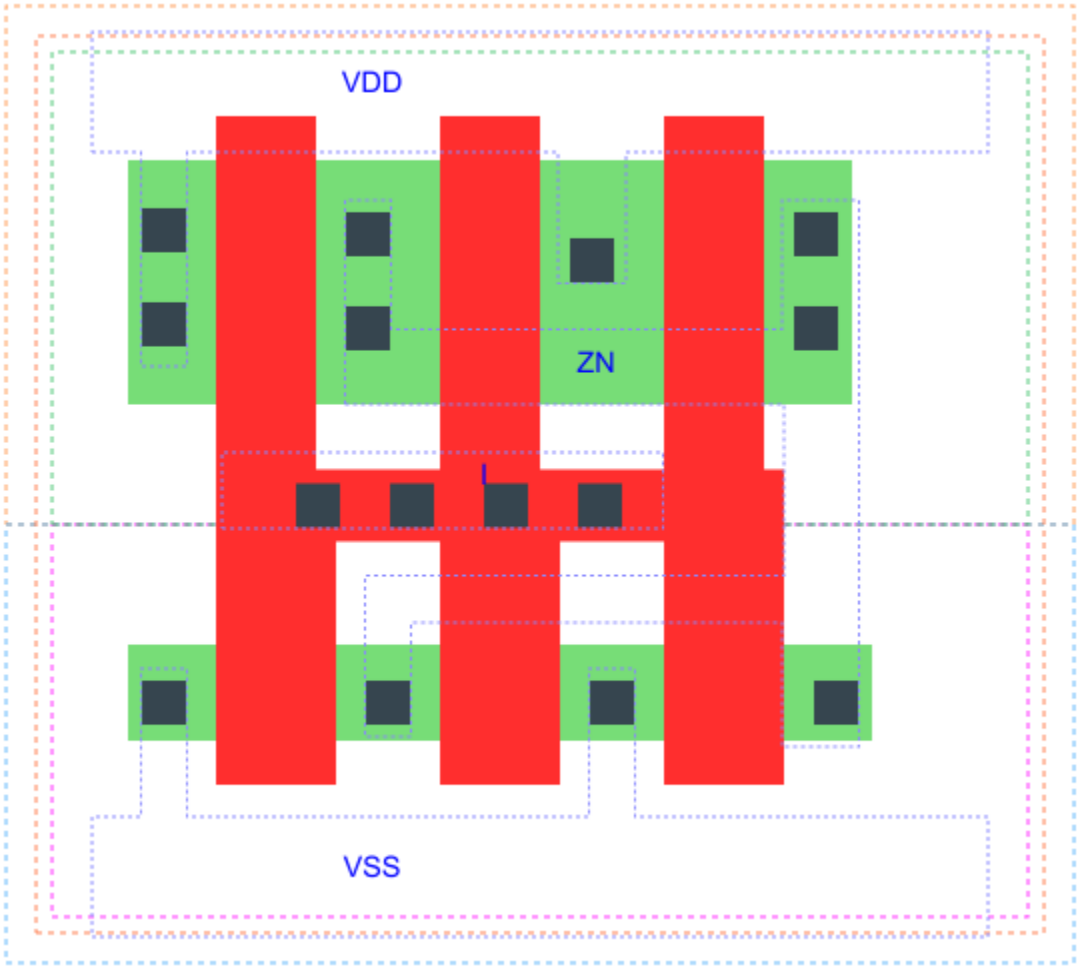

CLKINV_X3 is a clock inverter, 3X drive strength

Attributes

Attribute	Value
area	17.561600 μm^2

OUTPUT FUNCTIONS

Output Pin	Function
ZN	(!I)

TRUTH TABLE FOR ZN

I	ZN
0	1
1	0

FUNCTIONAL SCHEMATIC

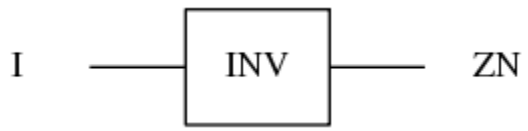

PIN CAPACITANCE (pf)

Pin	Type	Capacitance (pf)
I	input	0.0118

DELAY AND OUTPUT TRANSITION TIME corresponding to min slew and load

Input Pin	Output	When Condition	Tin (ns)	Out Load (pf)	Delay (ns)	Tout (ns)
I(LH)	ZN(HL)	default	0.0100	0.0010	0.0416	0.0190
I(HL)	ZN(LH)	default	0.0100	0.0010	0.0338	0.0214

DYNAMIC ENERGY

Input Pin	When Condition	Tin (ns)	Output	Out Load (pf)	Energy (uW/MHz)
I	default	0.0100	ZN(HL)	0.0010	-0.0236
I	default	0.0100	ZN(LH)	0.0010	0.2336

LEAKAGE POWER

When Condition	Power (nW)
!I	0.1270
I	0.1295

gf180mcu_fd_sc_mcu7t5v0__clkinv_4

gf180mcu_fd_sc_mcu7t5v0__clkinv_4 symbol

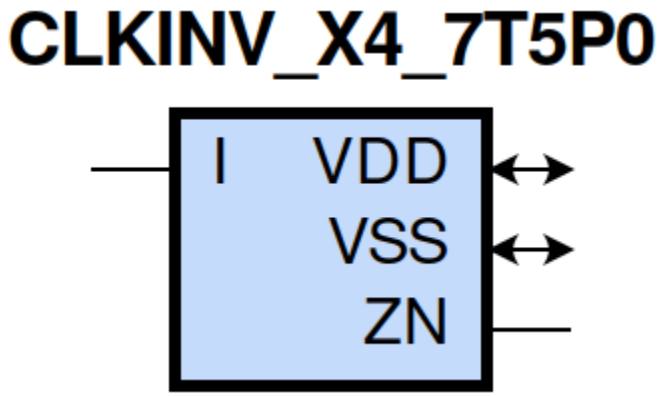

gf180mcu_fd_sc_mcu7t5v0__clkinv_4 schematic

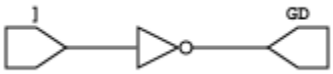

gf180mcu_fd_sc_mcu7t5v0__clkinv_4 layout

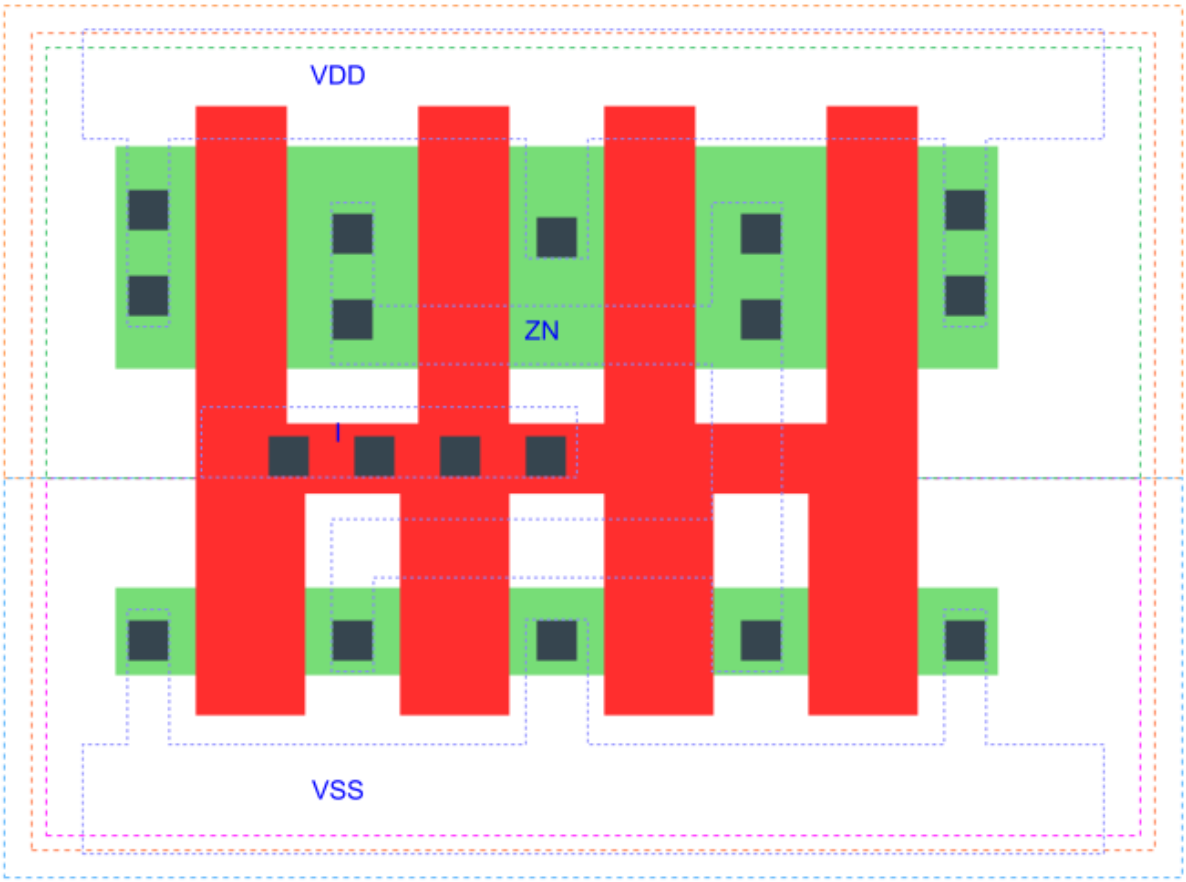

CLKINV_X4 is a clock inverter, 4X drive strength

Attributes

Attribute	Value
area	21.952000 μm^2

OUTPUT FUNCTIONS

Output Pin	Function
ZN	(!I)

TRUTH TABLE FOR ZN

I	ZN
0	1
1	0

FUNCTIONAL SCHEMATIC

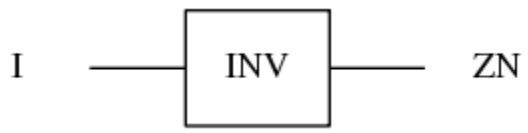

PIN CAPACITANCE (pf)

Pin	Type	Capacitance (pf)
I	input	0.0154

DELAY AND OUTPUT TRANSITION TIME corresponding to min slew and load

Input Pin	Output	When Condition	Tin (ns)	Out Load (pf)	Delay (ns)	Tout (ns)
I(LH)	ZN(HL)	default	0.0100	0.0010	0.0381	0.0162
I(HL)	ZN(LH)	default	0.0100	0.0010	0.0304	0.0186

DYNAMIC ENERGY

Input Pin	When Condition	Tin (ns)	Output	Out Load (pf)	Energy (uW/MHz)
I	default	0.0100	ZN(HL)	0.0010	-0.0374
I	default	0.0100	ZN(LH)	0.0010	0.2879

LEAKAGE POWER

When Condition	Power (nW)
!I	0.1527
I	0.1560

gf180mcu_fd_sc_mcu7t5v0__clkinv_8

gf180mcu_fd_sc_mcu7t5v0__clkinv_8 symbol

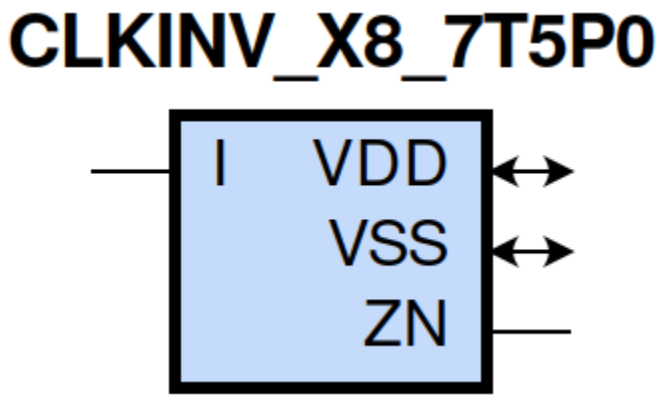

gf180mcu_fd_sc_mcu7t5v0__clkinv_8 schematic

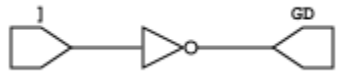

gf180mcu_fd_sc_mcu7t5v0__clkinv_8 layout

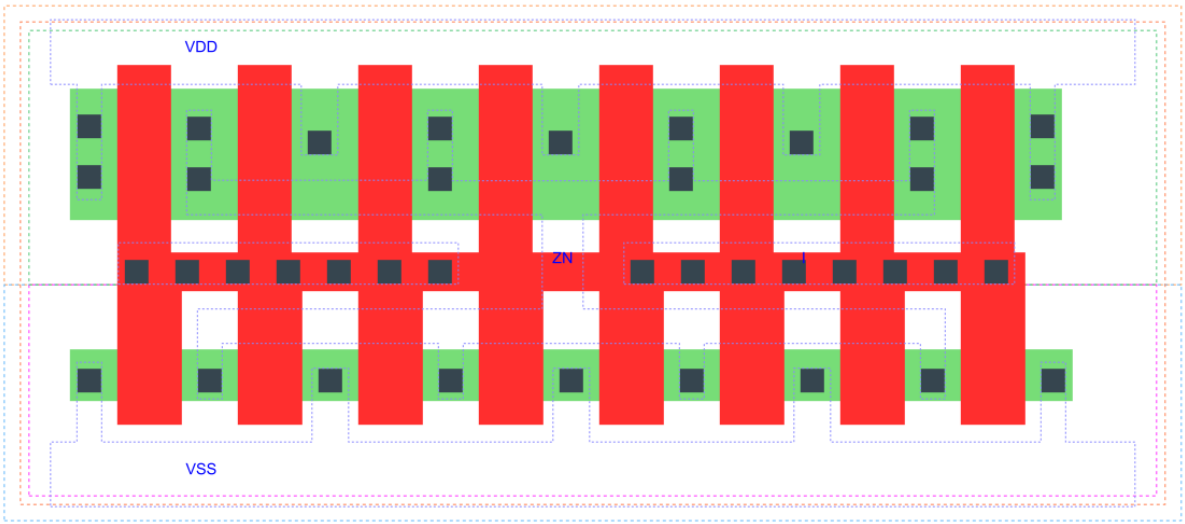

CLKINV_X8 is a clock inverter, 8X drive strength

Attributes

Attribute	Value
area	39.513600 μm^2

OUTPUT FUNCTIONS

Output Pin	Function
ZN	(!I)

TRUTH TABLE FOR ZN

I	ZN
0	1
1	0

FUNCTIONAL SCHEMATIC

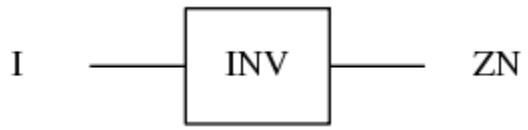

PIN CAPACITANCE (pf)

Pin	Type	Capacitance (pf)
I	input	0.0314

DELAY AND OUTPUT TRANSITION TIME corresponding to min slew and load

Input Pin	Output	When Condition	Tin (ns)	Out Load (pf)	Delay (ns)	Tout (ns)
I(LH)	ZN(HL)	default	0.0100	0.0010	0.0375	0.0157
I(HL)	ZN(LH)	default	0.0100	0.0010	0.0300	0.0181

DYNAMIC ENERGY

Input Pin	When Condition	Tin (ns)	Output	Out Load (pf)	Energy (uW/MHz)
I	default	0.0100	ZN(HL)	0.0010	-0.0859
I	default	0.0100	ZN(LH)	0.0010	0.5985

LEAKAGE POWER

When Condition	Power (nW)
!I	0.2554
I	0.2620

gf180mcu_fd_sc_mcu7t5v0__dffnq_1

gf180mcu_fd_sc_mcu7t5v0__dffnq_1 symbol

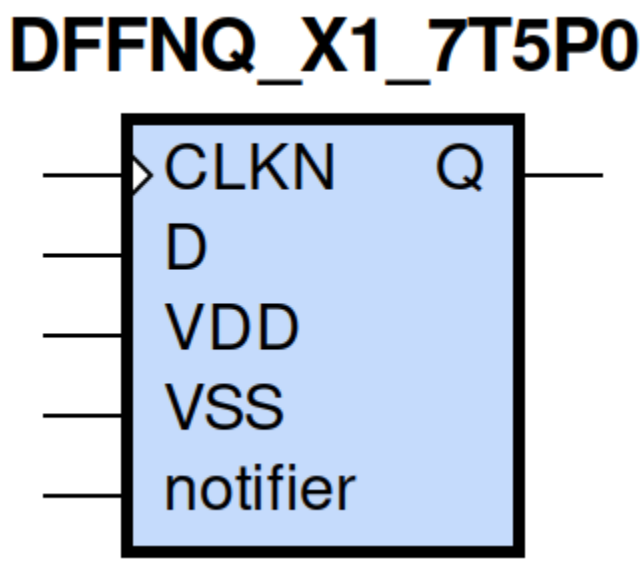

gf180mcu_fd_sc_mcu7t5v0__dffnq_1 schematic

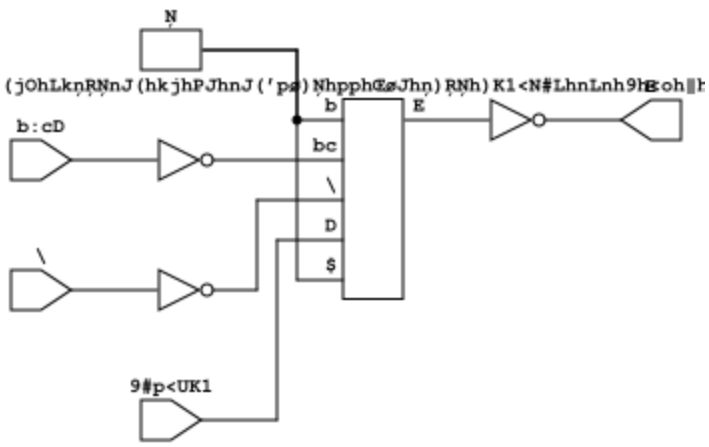

gf180mcu_fd_sc_mcu7t5v0__dffnq_1 layout

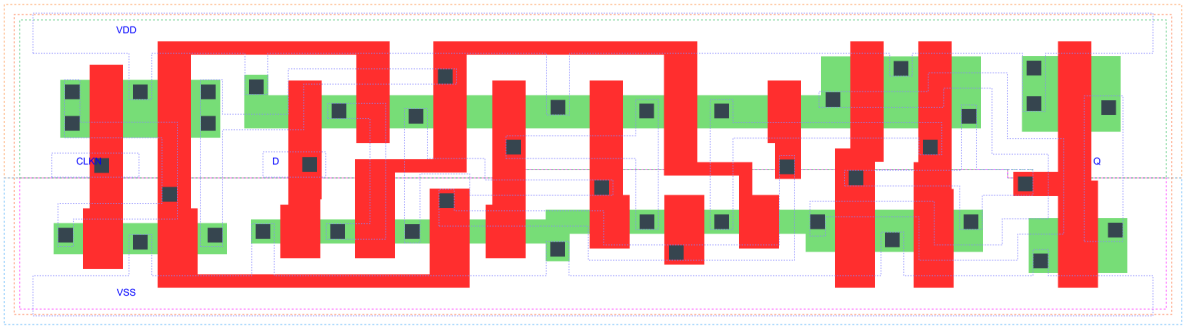

DFFNQ_X1 is a negative edge triggered D-type flip flop, 1X drive strength

Attributes

Attribute	Value
area	65.856000 μm^2

TRUTH TABLE

Input		Output
D	CLKN	Q
L	↓	L
H	↓	H

FUNCTIONAL SCHEMATIC

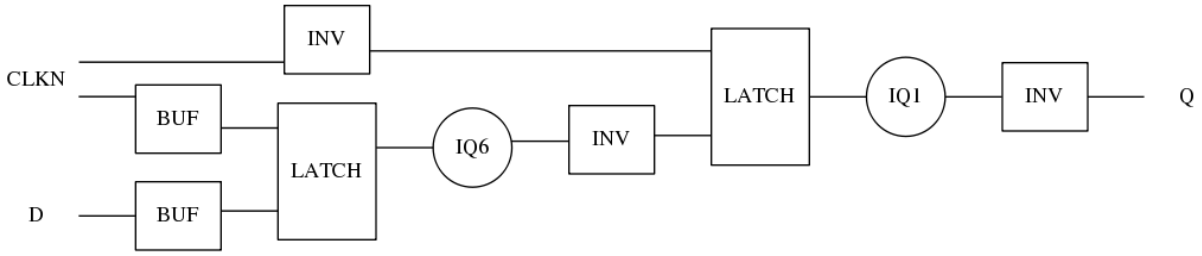

CONSTRAINTS

Constraint Pin	Related Pin	setup(ns)	hold(ns)
D(HL)	CLKN(HL)	0.2630	0.0400
D(LH)	CLKN(HL)	0.1490	0.1430

Constraint Pin	Related Pin	Minimum Pulse Width(ns)
CLKN(LHL)	CLKN(LH)	0.4060
CLKN(LHL)	CLKN(LH)	0.3510
CLKN(HLH)	CLKN(HL)	0.3680
CLKN(HLH)	CLKN(HL)	0.4460

PIN CAPACITANCE (pf)

Pin	Type	Capacitance (pf)
CLKN	input	0.0035
D	input	0.0024

DELAY AND OUTPUT TRANSITION TIME corresponding to min slew and load

Input Pin	Output	When Condition	Tin (ns)	Out Load (pf)	Delay (ns)	Tout (ns)
CLKN(HL)	Q(LH)	D	0.0100	0.0010	0.6896	0.0451
CLKN(HL)	Q(HL)	!D	0.0100	0.0010	0.5447	0.0379

DYNAMIC ENERGY

Input Pin	When Condition	Tin (ns)	Output	Out Load (pf)	Energy (uW/MHz)
CLKN	D	0.0100	Q(LH)	0.0010	0.8160
CLKN	!D	0.0100	Q(HL)	0.0010	0.6809
D(LH)	!CLKN	0.0100	n/a	n/a	0.0050
D(LH)	CLKN	0.0100	n/a	n/a	0.1310
CLKN(LH)	!D	0.0100	n/a	n/a	0.1986
CLKN(LH)	D	0.0100	n/a	n/a	0.1989
CLKN(HL)	!D	0.0100	n/a	n/a	0.3085
CLKN(HL)	D	0.0100	n/a	n/a	0.3085
D(HL)	!CLKN	0.0100	n/a	n/a	0.0571
D(HL)	CLKN	0.0100	n/a	n/a	0.2043

LEAKAGE POWER

When Condition	Power (nW)
!CLKN&!D	0.4766
CLKN&!D	0.4110
!CLKN&D	0.4801
CLKN&D	0.4093

gf180mcu_fd_sc_mcu7t5v0__dffnq_2

gf180mcu_fd_sc_mcu7t5v0__dffnq_2 symbol

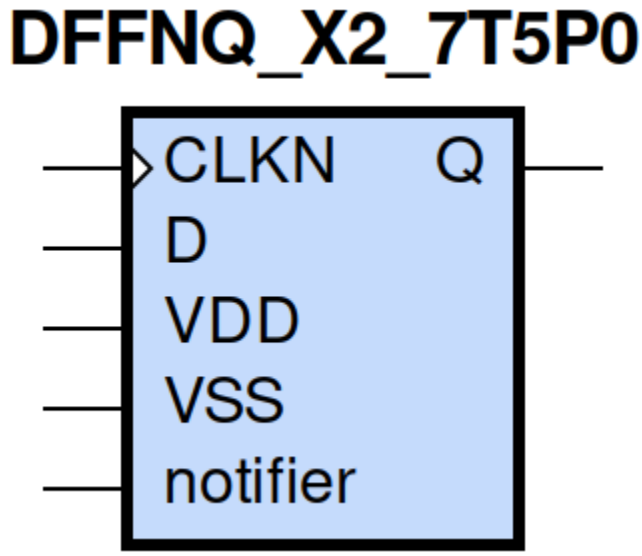

gf180mcu_fd_sc_mcu7t5v0__dffnq_2 schematic

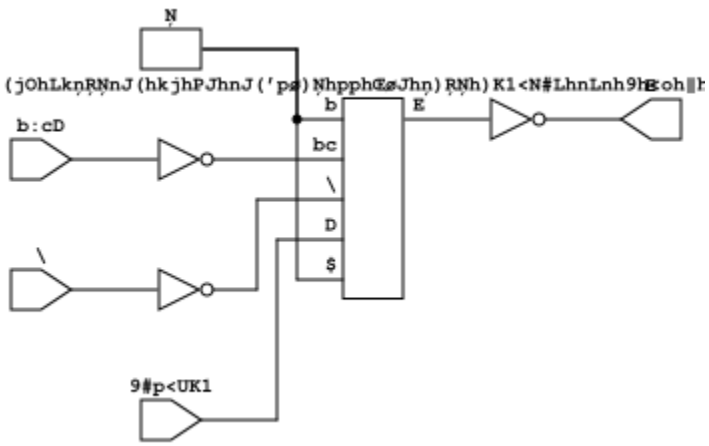

gf180mcu_fd_sc_mcu7t5v0__dffnq_2 layout

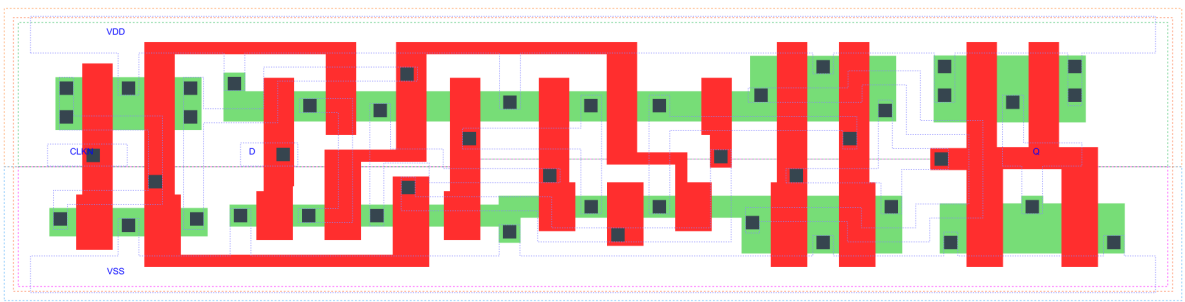

DFFNQ_X2 is a negative edge triggered D-type flip flop, 2X drive strength

Attributes

Attribute	Value
area	72.441600 μm^2

TRUTH TABLE

Input		Output
D	CLKN	Q
L	↓	L
H	↓	H

FUNCTIONAL SCHEMATIC

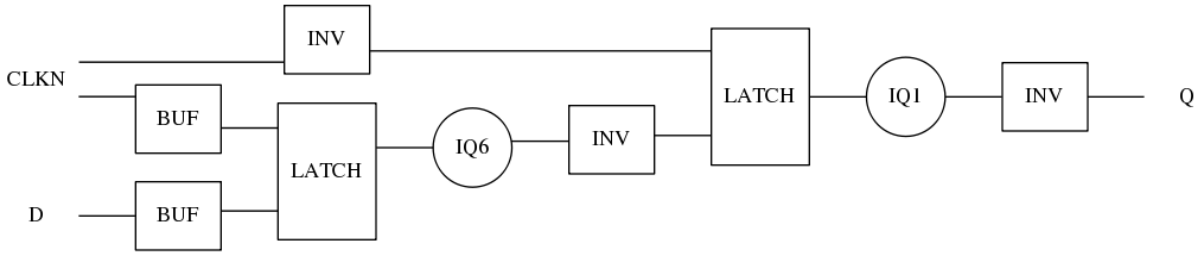

CONSTRAINTS

Constraint Pin	Related Pin	setup(ns)	hold(ns)
D(HL)	CLKN(HL)	0.2690	0.0630
D(LH)	CLKN(HL)	0.1550	0.1490

Constraint Pin	Related Pin	Minimum Pulse Width(ns)
CLKN(LHL)	CLKN(LH)	0.4120
CLKN(LHL)	CLKN(LH)	0.3570
CLKN(HLH)	CLKN(HL)	0.3980
CLKN(HLH)	CLKN(HL)	0.4560

PIN CAPACITANCE (pf)

Pin	Type	Capacitance (pf)
CLKN	input	0.0035
D	input	0.0024

DELAY AND OUTPUT TRANSITION TIME corresponding to min slew and load

Input Pin	Output	When Condition	Tin (ns)	Out Load (pf)	Delay (ns)	Tout (ns)
CLKN(HL)	Q(LH)	D	0.0100	0.0010	0.6753	0.0373
CLKN(HL)	Q(HL)	!D	0.0100	0.0010	0.5954	0.0393

DYNAMIC ENERGY

Input Pin	When Condition	Tin (ns)	Output	Out Load (pf)	Energy (uW/MHz)
CLKN	D	0.0100	Q(LH)	0.0010	0.9501
CLKN	!D	0.0100	Q(HL)	0.0010	0.8506
D(LH)	!CLKN	0.0100	n/a	n/a	0.0050
D(LH)	CLKN	0.0100	n/a	n/a	0.1310
CLKN(LH)	!D	0.0100	n/a	n/a	0.1984
CLKN(LH)	D	0.0100	n/a	n/a	0.1987
CLKN(HL)	!D	0.0100	n/a	n/a	0.3093
CLKN(HL)	D	0.0100	n/a	n/a	0.3094
D(HL)	!CLKN	0.0100	n/a	n/a	0.0571
D(HL)	CLKN	0.0100	n/a	n/a	0.2043

LEAKAGE POWER

When Condition	Power (nW)
!CLKN&!D	0.5030
CLKN&!D	0.4375
!CLKN&D	0.5055
CLKN&D	0.4348

gf180mcu_fd_sc_mcu7t5v0__dffnq_4

gf180mcu_fd_sc_mcu7t5v0__dffnq_4 symbol

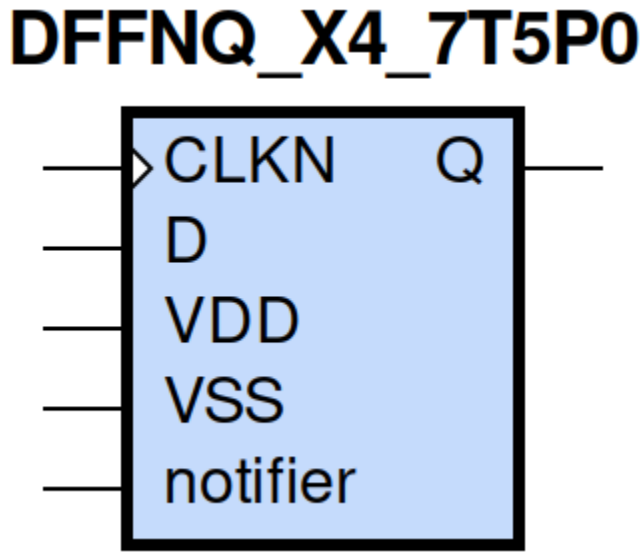

gf180mcu_fd_sc_mcu7t5v0__dffnq_4 schematic

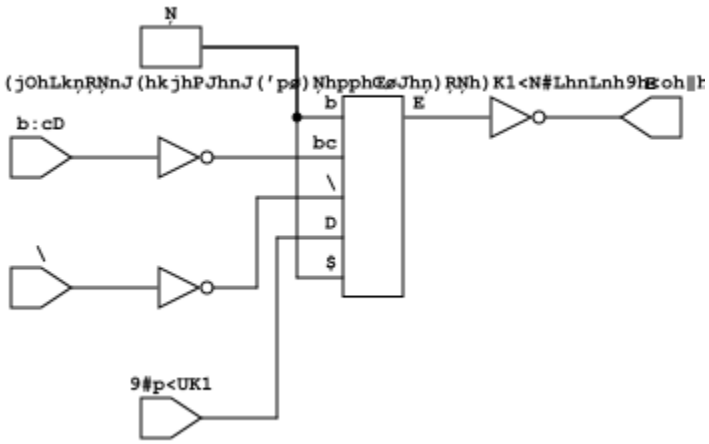

gf180mcu_fd_sc_mcu7t5v0__dffnq_4 layout

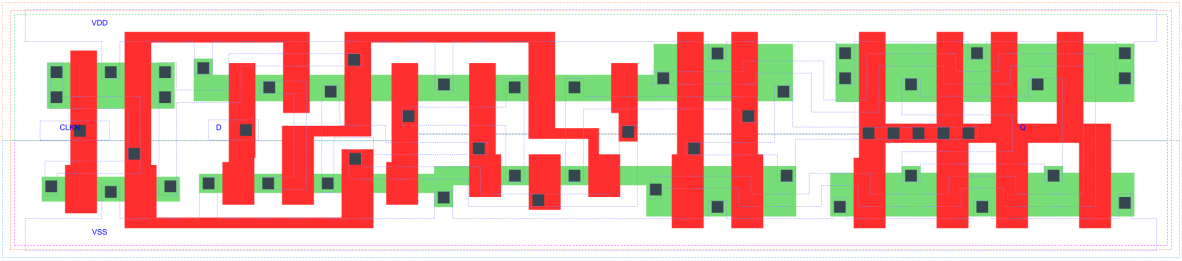

DFFNQ_X4 is a negative edge triggered D-type flip flop, 4X drive strength

Attributes

Attribute	Value
area	83.417600 μm^2

TRUTH TABLE

Input		Output
D	CLKN	Q
L	↓	L
H	↓	H

FUNCTIONAL SCHEMATIC

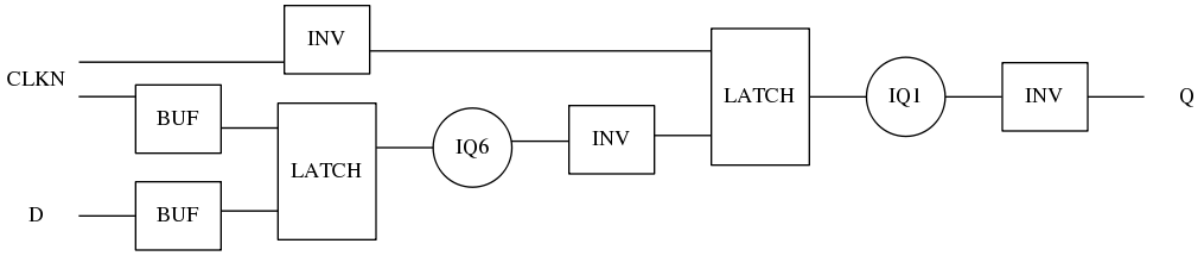

CONSTRAINTS

Constraint Pin	Related Pin	setup(ns)	hold(ns)
D(HL)	CLKN(HL)	0.2690	0.0690
D(LH)	CLKN(HL)	0.1660	0.1490

Constraint Pin	Related Pin	Minimum Pulse Width(ns)
CLKN(LHL)	CLKN(LH)	0.4120
CLKN(LHL)	CLKN(LH)	0.3630
CLKN(HLH)	CLKN(HL)	0.4460
CLKN(HLH)	CLKN(HL)	0.4950

PIN CAPACITANCE (pf)

Pin	Type	Capacitance (pf)
CLKN	input	0.0035
D	input	0.0024

DELAY AND OUTPUT TRANSITION TIME corresponding to min slew and load

Input Pin	Output	When Condition	Tin (ns)	Out Load (pf)	Delay (ns)	Tout (ns)
CLKN(HL)	Q(LH)	D	0.0100	0.0010	0.7513	0.0436
CLKN(HL)	Q(HL)	!D	0.0100	0.0010	0.6733	0.0526

DYNAMIC ENERGY

Input Pin	When Condition	Tin (ns)	Output	Out Load (pf)	Energy (uW/MHz)
CLKN	D	0.0100	Q(LH)	0.0010	1.3002
CLKN	!D	0.0100	Q(HL)	0.0010	1.2412
D(LH)	!CLKN	0.0100	n/a	n/a	0.0050
D(LH)	CLKN	0.0100	n/a	n/a	0.1310
CLKN(LH)	!D	0.0100	n/a	n/a	0.1983
CLKN(LH)	D	0.0100	n/a	n/a	0.1987
CLKN(HL)	!D	0.0100	n/a	n/a	0.3094
CLKN(HL)	D	0.0100	n/a	n/a	0.3093
D(HL)	!CLKN	0.0100	n/a	n/a	0.0571
D(HL)	CLKN	0.0100	n/a	n/a	0.2043

LEAKAGE POWER

When Condition	Power (nW)
!CLKN&!D	0.5559
CLKN&!D	0.4903
!CLKN&D	0.5564
CLKN&D	0.4857

gf180mcu_fd_sc_mcu7t5v0__dffnrnq_1

gf180mcu_fd_sc_mcu7t5v0__dffnrnq_1 symbol

DFFNRNQ_X1_7T5P0

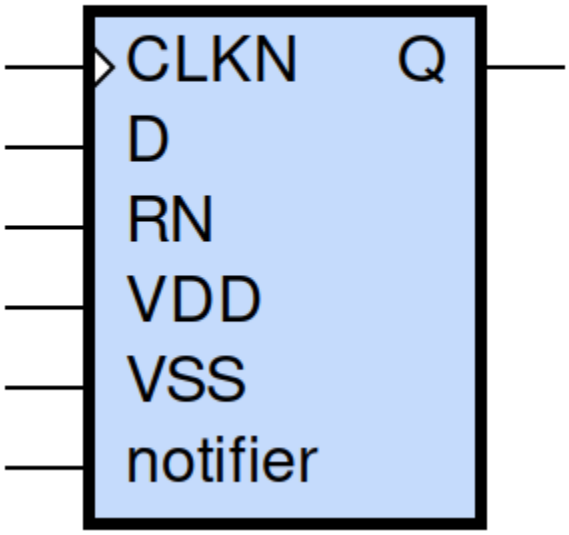

gf180mcu_fd_sc_mcu7t5v0__dffnrnq_1 schematic

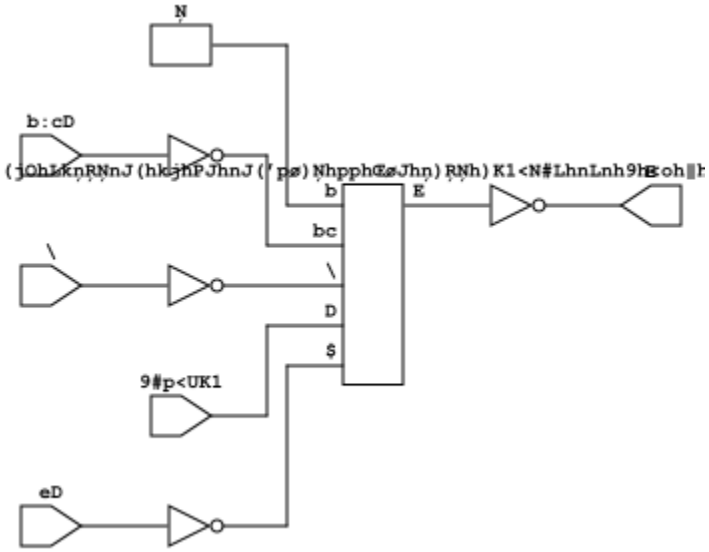

gf180mcu_fd_sc_mcu7t5v0__dffnrnq_1 layout

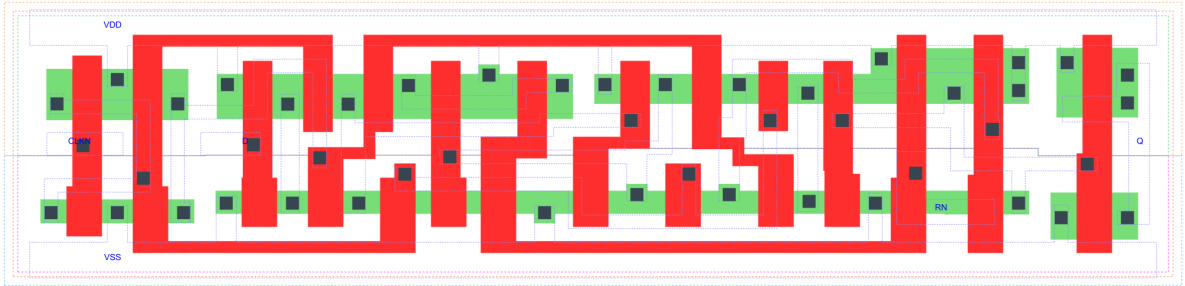

DFFNRNQ_X1 is a negative edge triggered D-type flip flop, active low reset and 1X drive strength

Attributes

Attribute	Value
area	74.636800 μm^2

TRUTH TABLE

Input			Output
RN	D	CLKN	Q
H	L	↓	L
H	H	↓	H
L	X	X	L

FUNCTIONAL SCHEMATIC

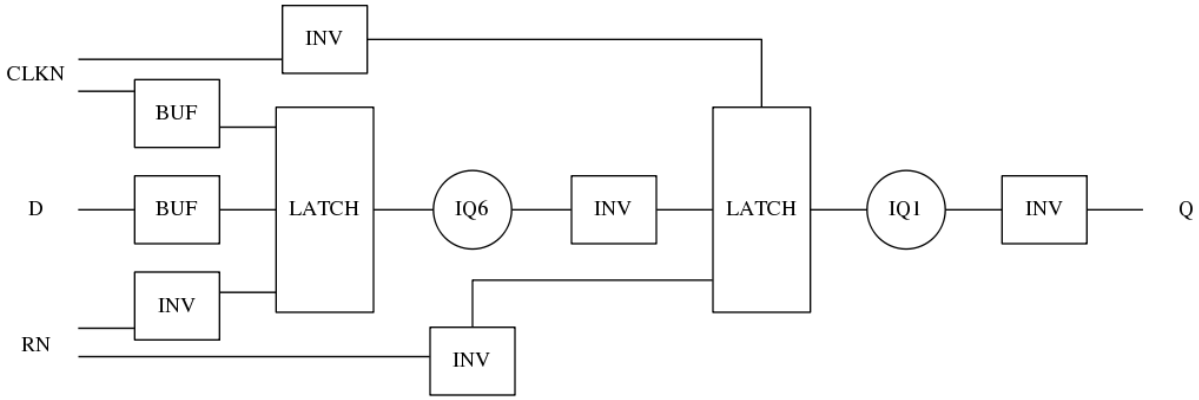

CONSTRAINTS

Constraint Pin	Related Pin	setup(ns)	hold(ns)
D(HL)	CLKN(HL)	0.2180	0.1720
D(LH)	CLKN(HL)	0.2180	0.1370

Constraint Pin	Related Pin	recovery(ns)	removal(ns)
RN(LH)	CLKN(HL)	-0.3840	0.5150

Constraint Pin	Related Pin	Minimum Pulse Width(ns)
CLKN(LHL)	CLKN(LH)	0.3940
CLKN(LHL)	CLKN(LH)	0.4610
CLKN(HLH)	CLKN(HL)	0.3490
CLKN(HLH)	CLKN(HL)	0.5440
RN(HLH)	RN(HL)	0.3580
RN(HLH)	RN(HL)	0.2900
RN(HLH)	RN(HL)	0.3580
RN(HLH)	RN(HL)	0.2900

PIN CAPACITANCE (pf)

Pin	Type	Capacitance (pf)
CLKN	input	0.0033
D	input	0.0030
RN	input	0.0072

DELAY AND OUTPUT TRANSITION TIME corresponding to min slew and load

Input Pin	Output	When Condition	Tin (ns)	Out Load (pf)	Delay (ns)	Tout (ns)
CLKN(HL)	Q(LH)	D&RN	0.0100	0.0010	0.8508	0.0591
CLKN(HL)	Q(HL)	!D&RN	0.0100	0.0010	0.5509	0.0403
RN(HL)	Q(HL)	!CLKN&!D	0.0100	0.0010	0.1855	0.0403
RN(HL)	Q(HL)	CLKN&!D	0.0100	0.0010	0.1853	0.0400
RN(HL)	Q(HL)	!CLKN&D	0.0100	0.0010	0.1855	0.0403
RN(HL)	Q(HL)	CLKN&D	0.0100	0.0010	0.1853	0.0403

DYNAMIC ENERGY

Input Pin	When Condition	Tin (ns)	Output	Out Load (pf)	Energy (uW/MHz)
RN	!CLKN&!D	0.0100	Q(HL)	0.0010	0.5955
RN	CLKN&!D	0.0100	Q(HL)	0.0010	0.3688
RN	!CLKN&D	0.0100	Q(HL)	0.0010	0.5954
RN	CLKN&D	0.0100	Q(HL)	0.0010	0.3861
CLKN	D&RN	0.0100	Q(LH)	0.0010	0.8125
CLKN	!D&RN	0.0100	Q(HL)	0.0010	0.6323
CLKN(LH)	!D&!RN	0.0100	n/a	n/a	0.2151
CLKN(LH)	D&!RN	0.0100	n/a	n/a	0.3952
CLKN(LH)	!D&RN	0.0100	n/a	n/a	0.2152
CLKN(LH)	D&RN	0.0100	n/a	n/a	0.2112
CLKN(HL)	!D&!RN	0.0100	n/a	n/a	0.3243
CLKN(HL)	D&!RN	0.0100	n/a	n/a	0.6334
CLKN(HL)	!D&RN	0.0100	n/a	n/a	0.3243
CLKN(HL)	D&RN	0.0100	n/a	n/a	0.3134
D(HL)	!CLKN&!RN	0.0100	n/a	n/a	0.0659
D(HL)	CLKN&!RN	0.0100	n/a	n/a	0.2512
D(HL)	!CLKN&RN	0.0100	n/a	n/a	0.0659
D(HL)	CLKN&RN	0.0100	n/a	n/a	0.2400
RN(HL)	!CLKN&!D	0.0100	n/a	n/a	0.0584
RN(HL)	CLKN&!D	0.0100	n/a	n/a	0.0569
RN(HL)	!CLKN&D	0.0100	n/a	n/a	0.0582
RN(HL)	CLKN&D	0.0100	n/a	n/a	0.0556
D(LH)	!CLKN&!RN	0.0100	n/a	n/a	0.0057
D(LH)	CLKN&!RN	0.0100	n/a	n/a	0.1543
D(LH)	!CLKN&RN	0.0100	n/a	n/a	0.0056
D(LH)	CLKN&RN	0.0100	n/a	n/a	0.1614
RN(LH)	!CLKN&!D	0.0100	n/a	n/a	-0.0543
RN(LH)	!CLKN&D	0.0100	n/a	n/a	-0.0543
RN(LH)	CLKN&!D	0.0100	n/a	n/a	-0.0544
RN(LH)	CLKN&D	0.0100	n/a	n/a	-0.0504

LEAKAGE POWER

When Condition	Power (nW)
!CLKN&!D&!RN	0.4512
!CLKN&D&!RN	0.4537
CLKN&!D&!RN	0.4107
CLKN&D&!RN	0.4121
!CLKN&!D&RN	0.4788
CLKN&!D&RN	0.4116
CLKN&D&RN	0.5250
!CLKN&D&RN	0.6195

gf180mcu_fd_sc_mcu7t5v0__dffnrnq_2

gf180mcu_fd_sc_mcu7t5v0__dffnrnq_2 symbol

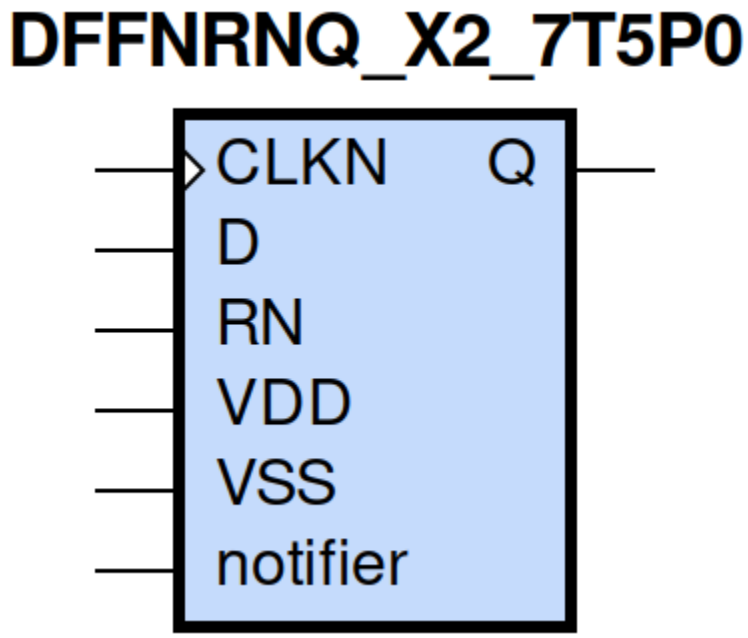

gf180mcu_fd_sc_mcu7t5v0__dffnrnq_2 schematic

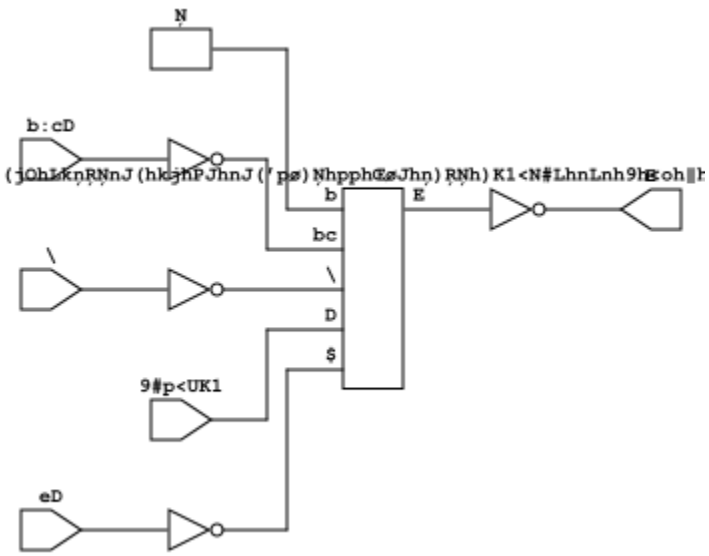

gf180mcu_fd_sc_mcu7t5v0__dffnrnq_2 layout

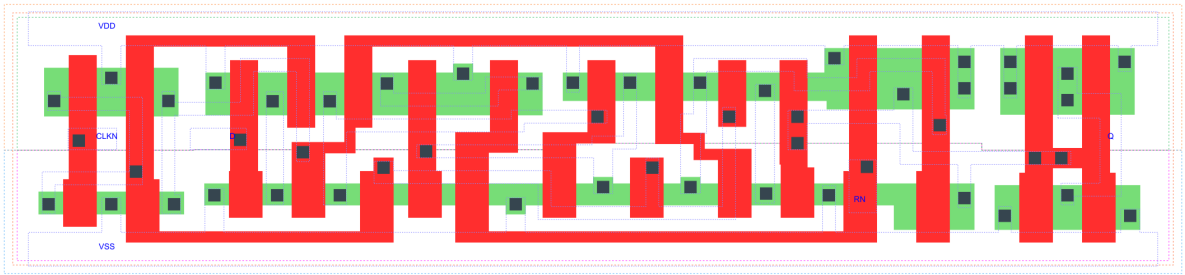

DFFNRNQ_X2 is a negative edge triggered D-type flip flop, active low reset and 2X drive strength

Attributes

Attribute	Value
area	79.027200 μm^2

TRUTH TABLE

Input			Output
RN	D	CLKN	Q
H	L	↓	L
H	H	↓	H
L	X	X	L

FUNCTIONAL SCHEMATIC

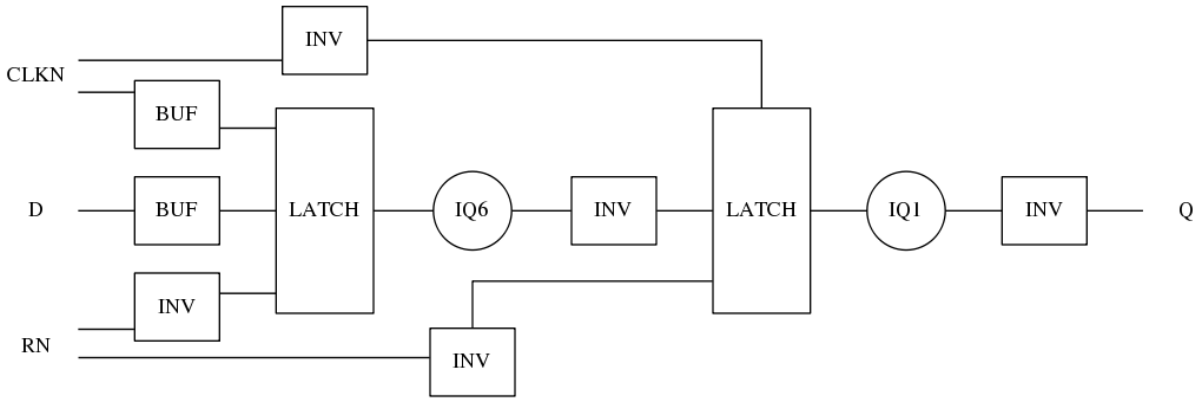

CONSTRAINTS

Constraint Pin	Related Pin	setup(ns)	hold(ns)
D(HL)	CLKN(HL)	0.2290	0.1830
D(LH)	CLKN(HL)	0.2350	0.1490

Constraint Pin	Related Pin	recovery(ns)	removal(ns)
RN(LH)	CLKN(HL)	-0.3720	0.5100

Constraint Pin	Related Pin	Minimum Pulse Width(ns)
CLKN(LHL)	CLKN(LH)	0.4000
CLKN(LHL)	CLKN(LH)	0.4730
CLKN(HLH)	CLKN(HL)	0.3780
CLKN(HLH)	CLKN(HL)	0.5540
RN(HLH)	RN(HL)	0.3580
RN(HLH)	RN(HL)	0.3000
RN(HLH)	RN(HL)	0.3580
RN(HLH)	RN(HL)	0.3000

PIN CAPACITANCE (pf)

Pin	Type	Capacitance (pf)
CLKN	input	0.0032
D	input	0.0030
RN	input	0.0071

DELAY AND OUTPUT TRANSITION TIME corresponding to min slew and load

Input Pin	Output	When Condition	Tin (ns)	Out Load (pf)	Delay (ns)	Tout (ns)
CLKN(HL)	Q(LH)	D&RN	0.0100	0.0010	0.8466	0.0498
CLKN(HL)	Q(HL)	!D&RN	0.0100	0.0010	0.5925	0.0364
RN(HL)	Q(HL)	!CLKN&!D	0.0100	0.0010	0.2032	0.0371
RN(HL)	Q(HL)	CLKN&!D	0.0100	0.0010	0.2034	0.0374
RN(HL)	Q(HL)	!CLKN&D	0.0100	0.0010	0.2033	0.0371
RN(HL)	Q(HL)	CLKN&D	0.0100	0.0010	0.2034	0.0373

DYNAMIC ENERGY

Input Pin	When Condition	Tin (ns)	Output	Out Load (pf)	Energy (uW/MHz)
RN	!CLKN&!D	0.0100	Q(HL)	0.0010	0.7631
RN	CLKN&!D	0.0100	Q(HL)	0.0010	0.5355
RN	!CLKN&D	0.0100	Q(HL)	0.0010	0.7630
RN	CLKN&D	0.0100	Q(HL)	0.0010	0.5524
CLKN	D&RN	0.0100	Q(LH)	0.0010	0.9855
CLKN	!D&RN	0.0100	Q(HL)	0.0010	0.7843
CLKN(LH)	!D&!RN	0.0100	n/a	n/a	0.2151
CLKN(LH)	D&!RN	0.0100	n/a	n/a	0.3950

continues on next page

Table 35 – continued from previous page

CLKN(LH)	!D&RN	0.0100	n/a	n/a	0.2149
CLKN(LH)	D&RN	0.0100	n/a	n/a	0.2113
CLKN(HL)	!D&!RN	0.0100	n/a	n/a	0.3224
CLKN(HL)	D&!RN	0.0100	n/a	n/a	0.6340
CLKN(HL)	!D&RN	0.0100	n/a	n/a	0.3224
CLKN(HL)	D&RN	0.0100	n/a	n/a	0.3115
D(HL)	!CLKN&!RN	0.0100	n/a	n/a	0.0659
D(HL)	CLKN&!RN	0.0100	n/a	n/a	0.2512
D(HL)	!CLKN&RN	0.0100	n/a	n/a	0.0659
D(HL)	CLKN&RN	0.0100	n/a	n/a	0.2400
RN(HL)	!CLKN&!D	0.0100	n/a	n/a	0.0632
RN(HL)	CLKN&!D	0.0100	n/a	n/a	0.0617
RN(HL)	!CLKN&D	0.0100	n/a	n/a	0.0631
RN(HL)	CLKN&D	0.0100	n/a	n/a	0.0605
D(LH)	!CLKN&!RN	0.0100	n/a	n/a	0.0056
D(LH)	CLKN&!RN	0.0100	n/a	n/a	0.1542
D(LH)	!CLKN&RN	0.0100	n/a	n/a	0.0056
D(LH)	CLKN&RN	0.0100	n/a	n/a	0.1614
RN(LH)	!CLKN&!D	0.0100	n/a	n/a	-0.0593
RN(LH)	!CLKN&D	0.0100	n/a	n/a	-0.0593
RN(LH)	CLKN&!D	0.0100	n/a	n/a	-0.0592
RN(LH)	CLKN&D	0.0100	n/a	n/a	-0.0554

LEAKAGE POWER

When Condition	Power (nW)
!CLKN&!D&!RN	0.4775
!CLKN&D&!RN	0.4800
CLKN&!D&!RN	0.4369
CLKN&D&!RN	0.4384
!CLKN&!D&RN	0.5044
CLKN&!D&RN	0.4372
CLKN&D&RN	0.5506
!CLKN&D&RN	0.6452

gf180mcu_fd_sc_mcu7t5v0__dffnrnq_4

gf180mcu_fd_sc_mcu7t5v0__dffnrnq_4 symbol

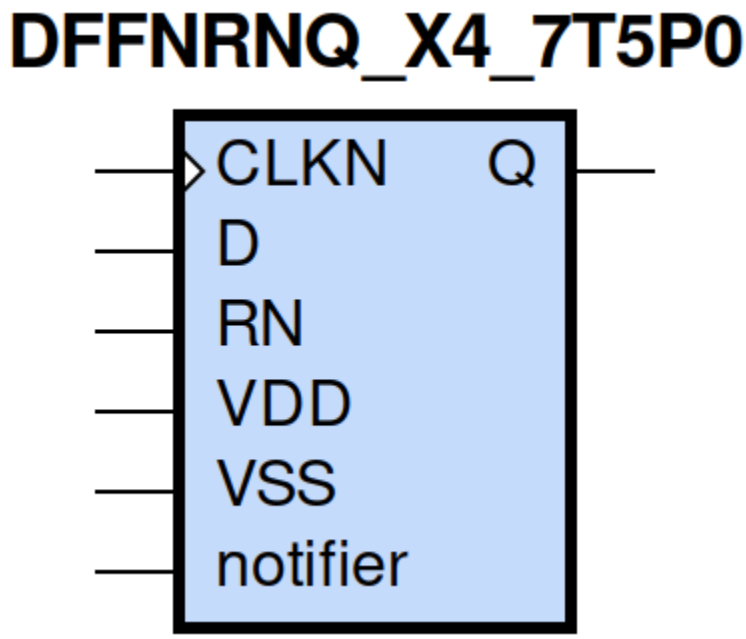

gf180mcu_fd_sc_mcu7t5v0__dffnrnq_4 schematic

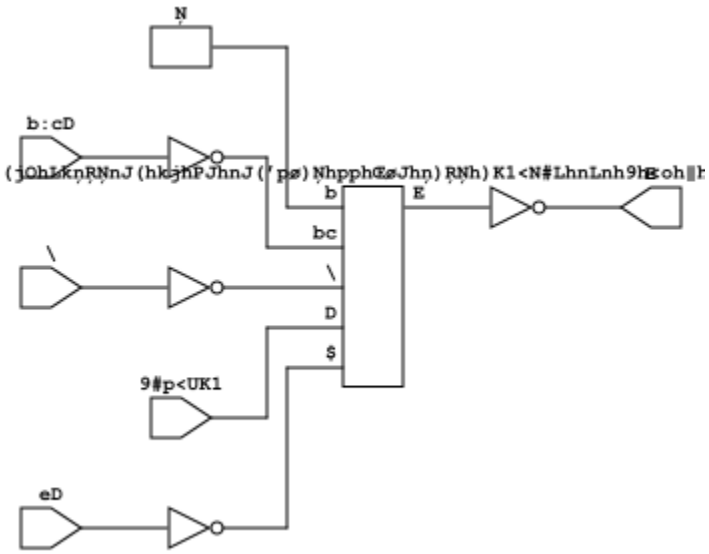

gf180mcu_fd_sc_mcu7t5v0__dffnrnq_4 layout

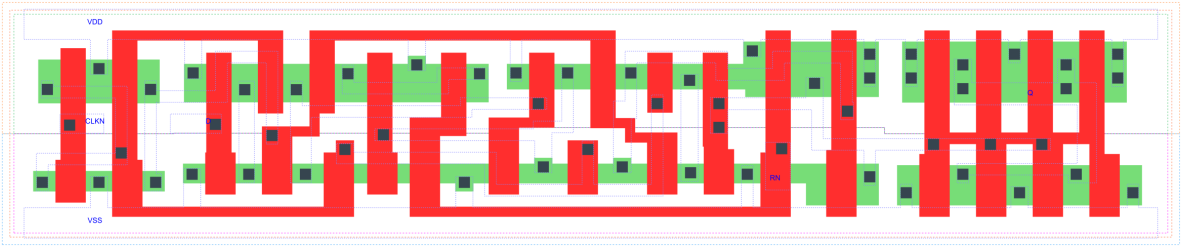

DFFNRNQ_X4 is a negative edge triggered D-type flip flop, active low reset and 4X drive strength

Attributes

Attribute	Value
area	87.808000 μm^2

TRUTH TABLE

Input			Output
RN	D	CLKN	Q
H	L	↓	L
H	H	↓	H
L	X	X	L

FUNCTIONAL SCHEMATIC

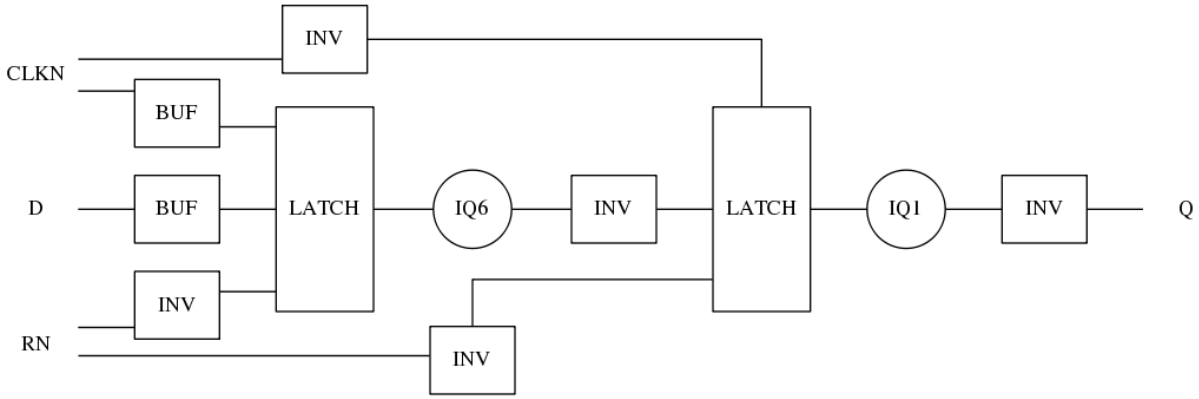

CONSTRAINTS

Constraint Pin	Related Pin	setup(ns)	hold(ns)
D(HL)	CLKN(HL)	0.2290	0.1830
D(LH)	CLKN(HL)	0.2290	0.1490

Constraint Pin	Related Pin	recovery(ns)	removal(ns)
RN(LH)	CLKN(HL)	-0.3660	0.5100

Constraint Pin	Related Pin	Minimum Pulse Width(ns)
CLKN(LHL)	CLKN(LH)	0.4000
CLKN(LHL)	CLKN(LH)	0.4730
CLKN(HLH)	CLKN(HL)	0.4070
CLKN(HLH)	CLKN(HL)	0.6420
RN(HLH)	RN(HL)	0.3580
RN(HLH)	RN(HL)	0.3490
RN(HLH)	RN(HL)	0.3580
RN(HLH)	RN(HL)	0.3490

PIN CAPACITANCE (pf)

Pin	Type	Capacitance (pf)
CLKN	input	0.0032
D	input	0.0030
RN	input	0.0072

DELAY AND OUTPUT TRANSITION TIME corresponding to min slew and load

Input Pin	Output	When Condition	Tin (ns)	Out Load (pf)	Delay (ns)	Tout (ns)
CLKN(HL)	Q(LH)	D&RN	0.0100	0.0010	0.9757	0.0618
CLKN(HL)	Q(HL)	!D&RN	0.0100	0.0010	0.6701	0.0474
RN(HL)	Q(HL)	!CLKN&!D	0.0100	0.0010	0.2766	0.0488
RN(HL)	Q(HL)	CLKN&!D	0.0100	0.0010	0.2769	0.0489
RN(HL)	Q(HL)	!CLKN&D	0.0100	0.0010	0.2766	0.0488
RN(HL)	Q(HL)	CLKN&D	0.0100	0.0010	0.2768	0.0489

DYNAMIC ENERGY

Input Pin	When Condition	Tin (ns)	Output	Out Load (pf)	Energy (uW/MHz)
RN	!CLKN&!D	0.0100	Q(HL)	0.0010	1.1448
RN	CLKN&!D	0.0100	Q(HL)	0.0010	0.9092
RN	!CLKN&D	0.0100	Q(HL)	0.0010	1.1443
RN	CLKN&D	0.0100	Q(HL)	0.0010	0.9260
CLKN	D&RN	0.0100	Q(LH)	0.0010	1.4416
CLKN	!D&RN	0.0100	Q(HL)	0.0010	1.1548
CLKN(LH)	!D&!RN	0.0100	n/a	n/a	0.2150
CLKN(LH)	D&!RN	0.0100	n/a	n/a	0.3949
CLKN(LH)	!D&RN	0.0100	n/a	n/a	0.2150
CLKN(LH)	D&RN	0.0100	n/a	n/a	0.2112
CLKN(HL)	!D&!RN	0.0100	n/a	n/a	0.3225
CLKN(HL)	D&!RN	0.0100	n/a	n/a	0.6340
CLKN(HL)	!D&RN	0.0100	n/a	n/a	0.3225
CLKN(HL)	D&RN	0.0100	n/a	n/a	0.3115
D(HL)	!CLKN&!RN	0.0100	n/a	n/a	0.0659
D(HL)	CLKN&!RN	0.0100	n/a	n/a	0.2512
D(HL)	!CLKN&RN	0.0100	n/a	n/a	0.0659
D(HL)	CLKN&RN	0.0100	n/a	n/a	0.2400
RN(HL)	!CLKN&!D	0.0100	n/a	n/a	0.0634
RN(HL)	CLKN&!D	0.0100	n/a	n/a	0.0619
RN(HL)	!CLKN&D	0.0100	n/a	n/a	0.0632
RN(HL)	CLKN&D	0.0100	n/a	n/a	0.0606
D(LH)	!CLKN&!RN	0.0100	n/a	n/a	0.0057
D(LH)	CLKN&!RN	0.0100	n/a	n/a	0.1543
D(LH)	!CLKN&RN	0.0100	n/a	n/a	0.0056
D(LH)	CLKN&RN	0.0100	n/a	n/a	0.1614
RN(LH)	!CLKN&!D	0.0100	n/a	n/a	-0.0595
RN(LH)	!CLKN&D	0.0100	n/a	n/a	-0.0595
RN(LH)	CLKN&!D	0.0100	n/a	n/a	-0.0594
RN(LH)	CLKN&D	0.0100	n/a	n/a	-0.0556

LEAKAGE POWER

When Condition	Power (nW)
!CLKN&!D&!RN	0.5305
!CLKN&D&!RN	0.5329
CLKN&!D&!RN	0.4899
CLKN&D&!RN	0.4914
!CLKN&!D&RN	0.5574
CLKN&!D&RN	0.4901
CLKN&D&RN	0.6036
!CLKN&D&RN	0.6960

gf180mcu_fd_sc_mcu7t5v0__dffnrsnq_1

gf180mcu_fd_sc_mcu7t5v0__dffnrsnq_1 symbol

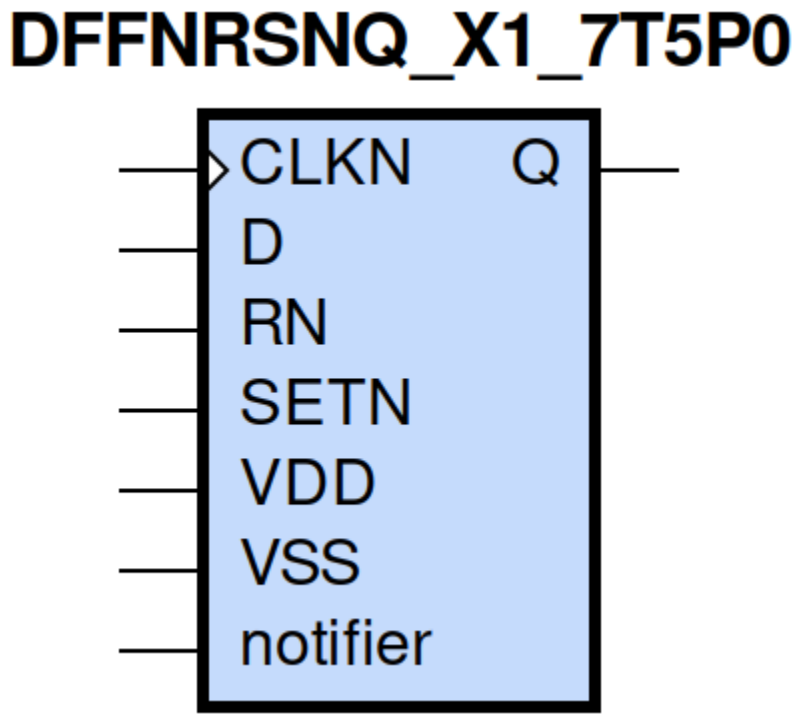

gf180mcu_fd_sc_mcu7t5v0__dffnrsnq_1 schematic

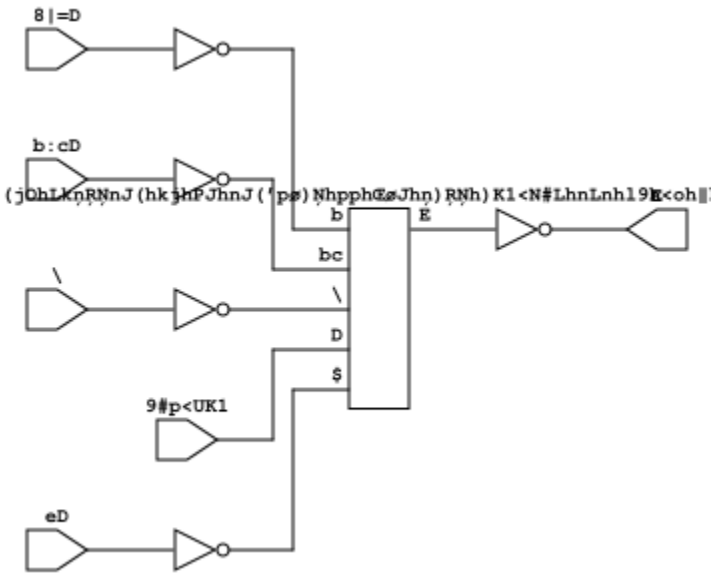

gf180mcu_fd_sc_mcu7t5v0__dffnrsnq_1 layout

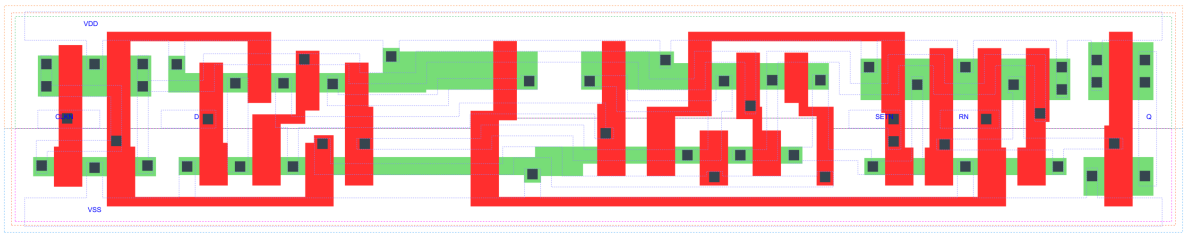

DFFNRSNQ_X1 is a negative edge triggered D-type flip flop, active low set/reset and 1X drive strength

Attributes

Attribute	Value
area	94.393600 μm^2

TRUTH TABLE

Input				Output
RN	SETN	D	CLKN	Q
H	H	L	↓	L
H	H	H	↓	H
L	H	X	X	L
H	L	X	X	H
L	L	X	X	L

FUNCTIONAL SCHEMATIC

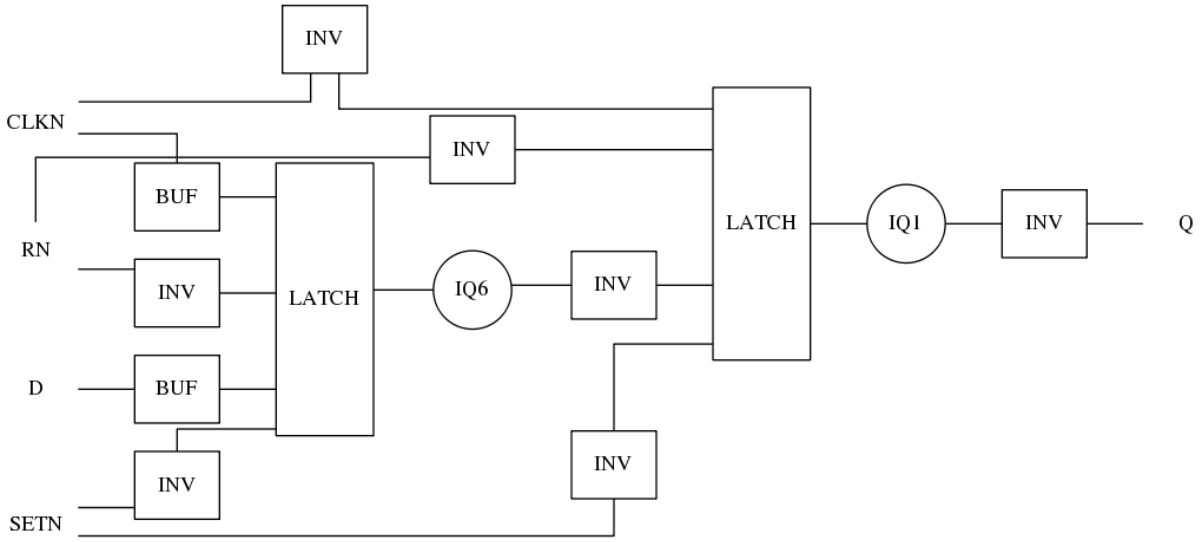

CONSTRAINTS

Constraint Pin	Related Pin	setup(ns)	hold(ns)
D(HL)	CLKN(HL)	0.5150	-0.0170
D(LH)	CLKN(HL)	0.1140	0.1950
SETN(LH)	RN(LH)	-0.0170	0.1090
SETN(LH)	RN(LH)	0.0170	0.0740
SETN(LH)	RN(LH)	-0.0170	0.1090
SETN(LH)	RN(LH)	0.0170	0.0740
RN(LH)	SETN(LH)	0.1090	-0.0170
RN(LH)	SETN(LH)	0.0740	0.0170
RN(LH)	SETN(LH)	0.1090	-0.0170
RN(LH)	SETN(LH)	0.0740	0.0170

Constraint Pin	Related Pin	recovery(ns)	removal(ns)
SETN(LH)	CLKN(HL)	0.1490	0.1490
RN(LH)	CLKN(HL)	-0.4580	0.8590

Constraint Pin	Related Pin	Minimum Pulse Width(ns)
CLKN(LHL)	CLKN(LH)	0.7300
CLKN(LHL)	CLKN(LH)	0.3760
CLKN(HLH)	CLKN(HL)	0.4460
CLKN(HLH)	CLKN(HL)	0.5150
SETN(HLH)	SETN(HL)	0.5150
SETN(HLH)	SETN(HL)	0.3780
SETN(HLH)	SETN(HL)	0.5150
SETN(HLH)	SETN(HL)	0.3780
RN(HLH)	RN(HL)	0.5930
RN(HLH)	RN(HL)	0.3490
RN(HLH)	RN(HL)	0.5930
RN(HLH)	RN(HL)	0.3490

PIN CAPACITANCE (pf)

Pin	Type	Capacitance (pf)
CLKN	input	0.0034
D	input	0.0024
SETN	input	0.0065
RN	input	0.0076

DELAY AND OUTPUT TRANSITION TIME corresponding to min slew and load

Input Pin	Output	When Condition	Tin (ns)	Out Load (pf)	Delay (ns)	Tout (ns)
CLKN(HL)	Q(LH)	D&RN&SETN	0.0100	0.0010	0.8515	0.0589
CLKN(HL)	Q(HL)	!D&RN&SETN	0.0100	0.0010	0.6474	0.0445
SETN(HL)	Q(LH)	!CLKN&!D&RN	0.0100	0.0010	0.7576	0.0582
SETN(HL)	Q(LH)	CLKN&!D&RN	0.0100	0.0010	0.5859	0.0578
SETN(HL)	Q(LH)	!CLKN&D&RN	0.0100	0.0010	0.7577	0.0585
SETN(HL)	Q(LH)	CLKN&D&RN	0.0100	0.0010	0.5862	0.0575
RN(HL)	Q(HL)	!CLKN&!D&SETN	0.0100	0.0010	0.1937	0.0409
RN(HL)	Q(HL)	CLKN&!D&SETN	0.0100	0.0010	0.1935	0.0411
RN(HL)	Q(HL)	!CLKN&D&SETN	0.0100	0.0010	0.1937	0.0409
RN(HL)	Q(HL)	CLKN&D&SETN	0.0100	0.0010	0.1935	0.0411
RN(HL)	Q(HL)	!CLKN&!D&!SETN	0.0100	0.0010	0.1934	0.0405
RN(HL)	Q(HL)	!CLKN&D&!SETN	0.0100	0.0010	0.1934	0.0405
RN(HL)	Q(HL)	CLKN&!D&!SETN	0.0100	0.0010	0.1933	0.0405
RN(HL)	Q(HL)	CLKN&D&!SETN	0.0100	0.0010	0.1933	0.0405
RN(LH)	Q(LH)	!CLKN&!D&!SETN	0.0100	0.0010	0.3156	0.0560
RN(LH)	Q(LH)	!CLKN&D&!SETN	0.0100	0.0010	0.3156	0.0560
RN(LH)	Q(LH)	CLKN&!D&!SETN	0.0100	0.0010	0.3130	0.0561
RN(LH)	Q(LH)	CLKN&D&!SETN	0.0100	0.0010	0.3130	0.0561

DYNAMIC ENERGY

Input Pin	When Condition	Tin (ns)	Output	Out Load (pf)	Energy (uW/MHz)
SETN	!CLKN&!D&RN	0.0100	Q(LH)	0.0010	0.7102
SETN	CLKN&!D&RN	0.0100	Q(LH)	0.0010	0.6061
SETN	!CLKN&D&RN	0.0100	Q(LH)	0.0010	0.7103
SETN	CLKN&D&RN	0.0100	Q(LH)	0.0010	0.4718
RN	!CLKN&!D&SETN	0.0100	Q(HL)	0.0010	0.6477
RN	CLKN&!D&SETN	0.0100	Q(HL)	0.0010	0.3848
RN	!CLKN&D&SETN	0.0100	Q(HL)	0.0010	0.6466
RN	CLKN&D&SETN	0.0100	Q(HL)	0.0010	0.3857
RN	!CLKN&!D&!SETN	0.0100	Q(HL)	0.0010	0.4463
RN	!CLKN&D&!SETN	0.0100	Q(HL)	0.0010	0.4463
RN	CLKN&!D&!SETN	0.0100	Q(HL)	0.0010	0.2639
RN	CLKN&D&!SETN	0.0100	Q(HL)	0.0010	0.2627
RN	!CLKN&!D&!SETN	0.0100	Q(LH)	0.0010	0.2484
RN	!CLKN&D&!SETN	0.0100	Q(LH)	0.0010	0.2484
RN	CLKN&!D&!SETN	0.0100	Q(LH)	0.0010	0.1570
RN	CLKN&D&!SETN	0.0100	Q(LH)	0.0010	0.1584
CLKN	D&RN&SETN	0.0100	Q(LH)	0.0010	0.8873
CLKN	!D&RN&SETN	0.0100	Q(HL)	0.0010	0.7079
SETN(HL)	!CLKN&!D&!RN	0.0100	n/a	n/a	0.3943
SETN(HL)	!CLKN&D&!RN	0.0100	n/a	n/a	0.3943
SETN(HL)	CLKN&!D&!RN	0.0100	n/a	n/a	0.3782
SETN(HL)	CLKN&D&!RN	0.0100	n/a	n/a	0.2485
SETN(HL)	!CLKN&!D&RN	0.0100	n/a	n/a	0.0502
SETN(HL)	CLKN&!D&RN	0.0100	n/a	n/a	0.1843

continues on next page

Table 37 – continued from previous page

SETN(HL)	!CLKN&D&RN	0.0100	n/a	n/a	0.0501
SETN(HL)	CLKN&D&RN	0.0100	n/a	n/a	0.0500
CLKN(LH)	!D&!RN&!SETN	0.0100	n/a	n/a	0.2506
CLKN(LH)	!D&!RN&SETN	0.0100	n/a	n/a	0.2484
CLKN(LH)	D&!RN&!SETN	0.0100	n/a	n/a	0.3199
CLKN(LH)	D&!RN&SETN	0.0100	n/a	n/a	0.4781
CLKN(LH)	!D&RN&!SETN	0.0100	n/a	n/a	0.3661
CLKN(LH)	D&RN&!SETN	0.0100	n/a	n/a	0.2530
CLKN(LH)	!D&RN&SETN	0.0100	n/a	n/a	0.2484
CLKN(LH)	D&RN&SETN	0.0100	n/a	n/a	0.2532
CLKN(HL)	!D&!RN&!SETN	0.0100	n/a	n/a	0.3846
CLKN(HL)	!D&!RN&SETN	0.0100	n/a	n/a	0.3554
CLKN(HL)	D&!RN&!SETN	0.0100	n/a	n/a	0.5074
CLKN(HL)	D&!RN&SETN	0.0100	n/a	n/a	0.7671
CLKN(HL)	!D&RN&!SETN	0.0100	n/a	n/a	0.4221
CLKN(HL)	D&RN&!SETN	0.0100	n/a	n/a	0.3705
CLKN(HL)	!D&RN&SETN	0.0100	n/a	n/a	0.3555
CLKN(HL)	D&RN&SETN	0.0100	n/a	n/a	0.3705
D(HL)	!CLKN&!RN&!SETN	0.0100	n/a	n/a	0.0526
D(HL)	!CLKN&!RN&SETN	0.0100	n/a	n/a	0.0526
D(HL)	CLKN&!RN&!SETN	0.0100	n/a	n/a	0.1681
D(HL)	CLKN&!RN&SETN	0.0100	n/a	n/a	0.2561
D(HL)	!CLKN&RN&!SETN	0.0100	n/a	n/a	0.0526
D(HL)	CLKN&RN&!SETN	0.0100	n/a	n/a	0.1681
D(HL)	!CLKN&RN&SETN	0.0100	n/a	n/a	0.0526
D(HL)	CLKN&RN&SETN	0.0100	n/a	n/a	0.2493
RN(HL)	!CLKN&!D&SETN	0.0100	n/a	n/a	0.0576
RN(HL)	CLKN&!D&SETN	0.0100	n/a	n/a	0.0558
RN(HL)	!CLKN&D&SETN	0.0100	n/a	n/a	0.0574
RN(HL)	CLKN&D&SETN	0.0100	n/a	n/a	0.0535
D(LH)	!CLKN&!RN&!SETN	0.0100	n/a	n/a	0.0046
D(LH)	!CLKN&!RN&SETN	0.0100	n/a	n/a	0.0047
D(LH)	CLKN&!RN&!SETN	0.0100	n/a	n/a	0.0561
D(LH)	CLKN&!RN&SETN	0.0100	n/a	n/a	0.2135
D(LH)	!CLKN&RN&!SETN	0.0100	n/a	n/a	0.0046
D(LH)	CLKN&RN&!SETN	0.0100	n/a	n/a	0.0561
D(LH)	!CLKN&RN&SETN	0.0100	n/a	n/a	0.0046
D(LH)	CLKN&RN&SETN	0.0100	n/a	n/a	0.2183
RN(LH)	!CLKN&!D&SETN	0.0100	n/a	n/a	-0.0537
RN(LH)	!CLKN&D&SETN	0.0100	n/a	n/a	-0.0537
RN(LH)	CLKN&!D&SETN	0.0100	n/a	n/a	-0.0537
RN(LH)	CLKN&D&SETN	0.0100	n/a	n/a	-0.0486
SETN(LH)	!CLKN&!D&!RN	0.0100	n/a	n/a	0.1172
SETN(LH)	!CLKN&D&!RN	0.0100	n/a	n/a	0.1172
SETN(LH)	CLKN&!D&!RN	0.0100	n/a	n/a	0.1222
SETN(LH)	CLKN&D&!RN	0.0100	n/a	n/a	0.0670
SETN(LH)	!CLKN&!D&RN	0.0100	n/a	n/a	-0.0342
SETN(LH)	!CLKN&D&RN	0.0100	n/a	n/a	-0.0342
SETN(LH)	CLKN&!D&RN	0.0100	n/a	n/a	0.0148
SETN(LH)	CLKN&D&RN	0.0100	n/a	n/a	-0.0342

LEAKAGE POWER

When Condition	Power (nW)
!CLKN&!D&!RN&!SETN	0.5357
!CLKN&!D&!RN&SETN	0.5046
!CLKN&D&!RN&!SETN	0.5377
!CLKN&D&!RN&SETN	0.5066
CLKN&!D&!RN&!SETN	0.4546
CLKN&!D&!RN&SETN	0.4640
CLKN&D&!RN&!SETN	0.4521
CLKN&D&!RN&SETN	0.4809
!CLKN&D&RN&SETN	0.7068
!CLKN&!D&RN&!SETN	0.4925
!CLKN&D&RN&!SETN	0.4908
CLKN&!D&RN&!SETN	0.4379
CLKN&D&RN&!SETN	0.4343
!CLKN&!D&RN&SETN	0.5317
CLKN&!D&RN&SETN	0.6085
CLKN&D&RN&SETN	0.5926

gf180mcu_fd_sc_mcu7t5v0__dffnrsnq_2

gf180mcu_fd_sc_mcu7t5v0__dffnrsnq_2 symbol

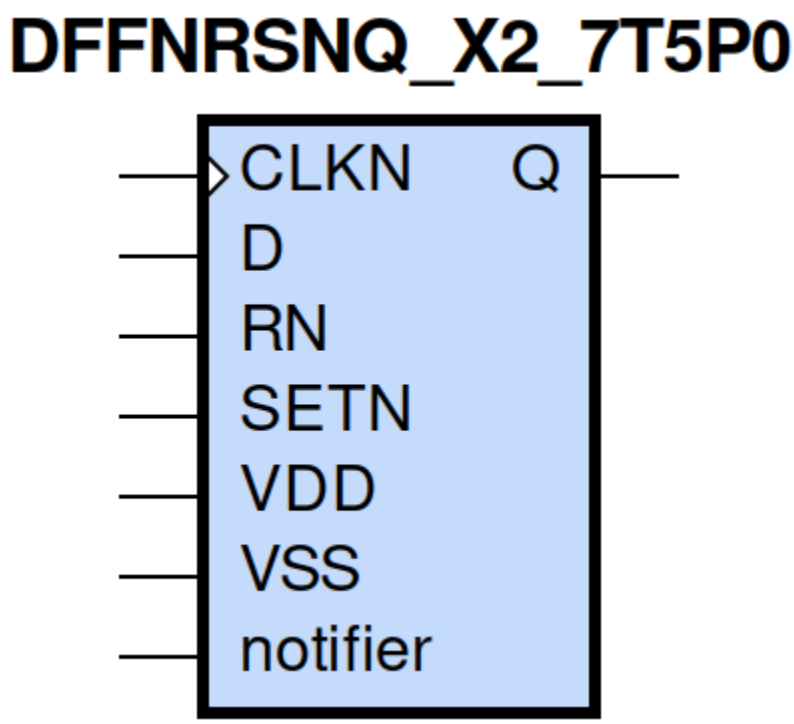

gf180mcu_fd_sc_mcu7t5v0__dffnrsnq_2 schematic

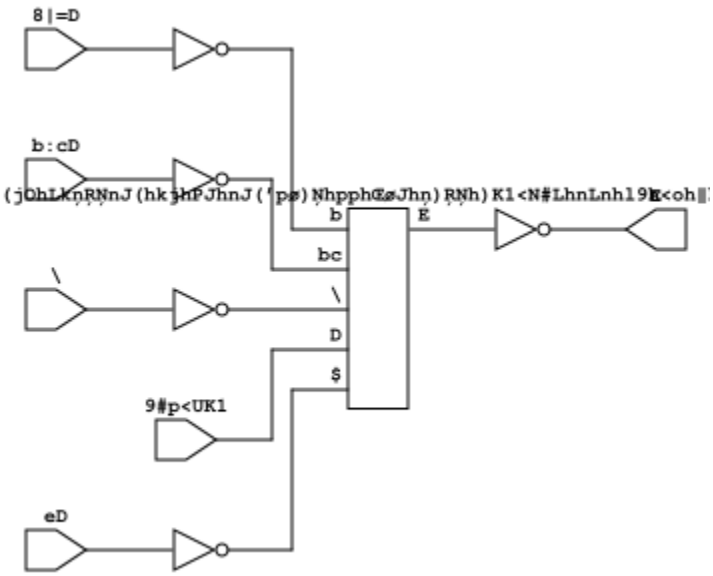

gf180mcu_fd_sc_mcu7t5v0__dffnrsnq_2 layout

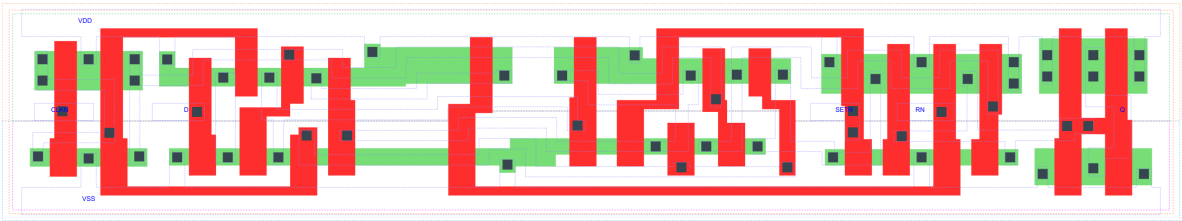

DFFNRSNQ_X2 is a negative edge triggered D-type flip flop, active low set/reset and 2X drive strength

Attributes

Attribute	Value
area	98.784000 μm^2

TRUTH TABLE

Input				Output
RN	SETN	D	CLKN	Q
H	H	L	↓	L
H	H	H	↓	H
L	H	X	X	L
H	L	X	X	H
L	L	X	X	L

FUNCTIONAL SCHEMATIC

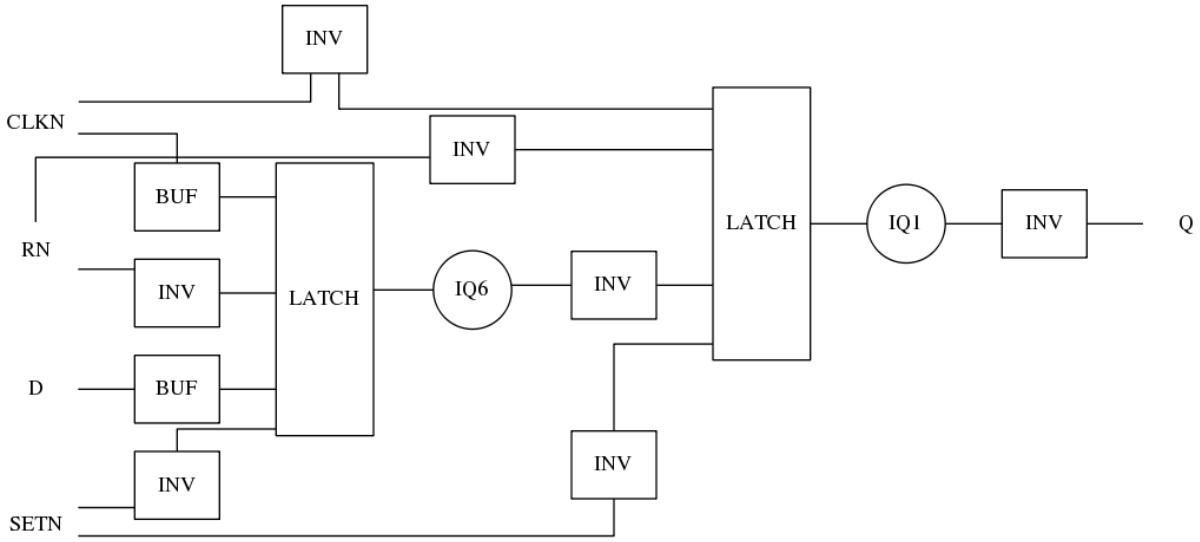

CONSTRAINTS

Constraint Pin	Related Pin	setup(ns)	hold(ns)
D(HL)	CLKN(HL)	0.5270	-0.0000
D(LH)	CLKN(HL)	0.1200	0.2000
SETN(LH)	RN(LH)	-0.0170	0.1490
SETN(LH)	RN(LH)	-0.0340	0.1430
SETN(LH)	RN(LH)	-0.0170	0.1490
SETN(LH)	RN(LH)	-0.0340	0.1490
RN(LH)	SETN(LH)	0.1490	-0.0170
RN(LH)	SETN(LH)	0.1430	-0.0340
RN(LH)	SETN(LH)	0.1490	-0.0170
RN(LH)	SETN(LH)	0.1490	-0.0340

Constraint Pin	Related Pin	recovery(ns)	removal(ns)
SETN(LH)	CLKN(HL)	0.1550	0.1490
RN(LH)	CLKN(HL)	-0.4410	0.8590

Constraint Pin	Related Pin	Minimum Pulse Width(ns)
CLKN(LHL)	CLKN(LH)	0.7360
CLKN(LHL)	CLKN(LH)	0.3820
CLKN(HLH)	CLKN(HL)	0.4760
CLKN(HLH)	CLKN(HL)	0.5830
SETN(HLH)	SETN(HL)	0.5340
SETN(HLH)	SETN(HL)	0.4370
SETN(HLH)	SETN(HL)	0.5340
SETN(HLH)	SETN(HL)	0.4370
RN(HLH)	RN(HL)	0.5930
RN(HLH)	RN(HL)	0.3290
RN(HLH)	RN(HL)	0.5930
RN(HLH)	RN(HL)	0.3290

PIN CAPACITANCE (pf)

Pin	Type	Capacitance (pf)
CLKN	input	0.0034
D	input	0.0024
SETN	input	0.0065
RN	input	0.0077

DELAY AND OUTPUT TRANSITION TIME corresponding to min slew and load

Input Pin	Output	When Condition	Tin (ns)	Out Load (pf)	Delay (ns)	Tout (ns)
CLKN(HL)	Q(LH)	D&RN&SETN	0.0100	0.0010	0.9237	0.0573
CLKN(HL)	Q(HL)	!D&RN&SETN	0.0100	0.0010	0.6879	0.0448
SETN(HL)	Q(LH)	!CLKN&!D&RN	0.0100	0.0010	0.8286	0.0567
SETN(HL)	Q(LH)	CLKN&!D&RN	0.0100	0.0010	0.6571	0.0564
SETN(HL)	Q(LH)	!CLKN&D&RN	0.0100	0.0010	0.8285	0.0565
SETN(HL)	Q(LH)	CLKN&D&RN	0.0100	0.0010	0.6572	0.0562
RN(HL)	Q(HL)	!CLKN&!D&SETN	0.0100	0.0010	0.2251	0.0412
RN(HL)	Q(HL)	CLKN&!D&SETN	0.0100	0.0010	0.2249	0.0413
RN(HL)	Q(HL)	!CLKN&D&SETN	0.0100	0.0010	0.2250	0.0412
RN(HL)	Q(HL)	CLKN&D&SETN	0.0100	0.0010	0.2248	0.0413
RN(HL)	Q(HL)	!CLKN&!D&!SETN	0.0100	0.0010	0.2247	0.0407
RN(HL)	Q(HL)	!CLKN&D&!SETN	0.0100	0.0010	0.2247	0.0407
RN(HL)	Q(HL)	CLKN&!D&!SETN	0.0100	0.0010	0.2245	0.0407
RN(HL)	Q(HL)	CLKN&D&!SETN	0.0100	0.0010	0.2245	0.0407
RN(LH)	Q(LH)	!CLKN&!D&!SETN	0.0100	0.0010	0.3833	0.0547
RN(LH)	Q(LH)	!CLKN&D&!SETN	0.0100	0.0010	0.3833	0.0547
RN(LH)	Q(LH)	CLKN&!D&!SETN	0.0100	0.0010	0.3797	0.0549
RN(LH)	Q(LH)	CLKN&D&!SETN	0.0100	0.0010	0.3799	0.0546

DYNAMIC ENERGY

Input Pin	When Condition	Tin (ns)	Output	Out Load (pf)	Energy (uW/MHz)
SETN	!CLKN&!D&RN	0.0100	Q(LH)	0.0010	0.8851
SETN	CLKN&!D&RN	0.0100	Q(LH)	0.0010	0.7798
SETN	!CLKN&D&RN	0.0100	Q(LH)	0.0010	0.8849
SETN	CLKN&D&RN	0.0100	Q(LH)	0.0010	0.6456
RN	!CLKN&!D&SETN	0.0100	Q(HL)	0.0010	0.7985
RN	CLKN&!D&SETN	0.0100	Q(HL)	0.0010	0.5321
RN	!CLKN&D&SETN	0.0100	Q(HL)	0.0010	0.7975
RN	CLKN&D&SETN	0.0100	Q(HL)	0.0010	0.5330
RN	!CLKN&!D&!SETN	0.0100	Q(HL)	0.0010	0.5866
RN	!CLKN&D&!SETN	0.0100	Q(HL)	0.0010	0.5866
RN	CLKN&!D&!SETN	0.0100	Q(HL)	0.0010	0.4043
RN	CLKN&D&!SETN	0.0100	Q(HL)	0.0010	0.4032
RN	!CLKN&!D&!SETN	0.0100	Q(LH)	0.0010	0.4191
RN	!CLKN&D&!SETN	0.0100	Q(LH)	0.0010	0.4191
RN	CLKN&!D&!SETN	0.0100	Q(LH)	0.0010	0.3268
RN	CLKN&D&!SETN	0.0100	Q(LH)	0.0010	0.3283
CLKN	D&RN&SETN	0.0100	Q(LH)	0.0010	1.0786
CLKN	!D&RN&SETN	0.0100	Q(HL)	0.0010	0.8673
SETN(HL)	!CLKN&!D&!RN	0.0100	n/a	n/a	0.3943
SETN(HL)	!CLKN&D&!RN	0.0100	n/a	n/a	0.3943
SETN(HL)	CLKN&!D&!RN	0.0100	n/a	n/a	0.3783
SETN(HL)	CLKN&D&!RN	0.0100	n/a	n/a	0.2487
SETN(HL)	!CLKN&!D&RN	0.0100	n/a	n/a	0.0501
SETN(HL)	CLKN&!D&RN	0.0100	n/a	n/a	0.1843

continues on next page

Table 38 – continued from previous page

SETN(HL)	!CLKN&D&RN	0.0100	n/a	n/a	0.0501
SETN(HL)	CLKN&D&RN	0.0100	n/a	n/a	0.0500
CLKN(LH)	!D&!RN&!SETN	0.0100	n/a	n/a	0.2506
CLKN(LH)	!D&!RN&SETN	0.0100	n/a	n/a	0.2484
CLKN(LH)	D&!RN&!SETN	0.0100	n/a	n/a	0.3199
CLKN(LH)	D&!RN&SETN	0.0100	n/a	n/a	0.4781
CLKN(LH)	!D&RN&!SETN	0.0100	n/a	n/a	0.3659
CLKN(LH)	D&RN&!SETN	0.0100	n/a	n/a	0.2529
CLKN(LH)	!D&RN&SETN	0.0100	n/a	n/a	0.2485
CLKN(LH)	D&RN&SETN	0.0100	n/a	n/a	0.2530
CLKN(HL)	!D&!RN&!SETN	0.0100	n/a	n/a	0.3846
CLKN(HL)	!D&!RN&SETN	0.0100	n/a	n/a	0.3553
CLKN(HL)	D&!RN&!SETN	0.0100	n/a	n/a	0.5073
CLKN(HL)	D&!RN&SETN	0.0100	n/a	n/a	0.7671
CLKN(HL)	!D&RN&!SETN	0.0100	n/a	n/a	0.4220
CLKN(HL)	D&RN&!SETN	0.0100	n/a	n/a	0.3705
CLKN(HL)	!D&RN&SETN	0.0100	n/a	n/a	0.3554
CLKN(HL)	D&RN&SETN	0.0100	n/a	n/a	0.3705
D(HL)	!CLKN&!RN&!SETN	0.0100	n/a	n/a	0.0526
D(HL)	!CLKN&!RN&SETN	0.0100	n/a	n/a	0.0526
D(HL)	CLKN&!RN&!SETN	0.0100	n/a	n/a	0.1681
D(HL)	CLKN&!RN&SETN	0.0100	n/a	n/a	0.2561
D(HL)	!CLKN&RN&!SETN	0.0100	n/a	n/a	0.0526
D(HL)	CLKN&RN&!SETN	0.0100	n/a	n/a	0.1681
D(HL)	!CLKN&RN&SETN	0.0100	n/a	n/a	0.0526
D(HL)	CLKN&RN&SETN	0.0100	n/a	n/a	0.2493
RN(HL)	!CLKN&!D&SETN	0.0100	n/a	n/a	0.0576
RN(HL)	CLKN&!D&SETN	0.0100	n/a	n/a	0.0558
RN(HL)	!CLKN&D&SETN	0.0100	n/a	n/a	0.0574
RN(HL)	CLKN&D&SETN	0.0100	n/a	n/a	0.0535
D(LH)	!CLKN&!RN&!SETN	0.0100	n/a	n/a	0.0046
D(LH)	!CLKN&!RN&SETN	0.0100	n/a	n/a	0.0046
D(LH)	CLKN&!RN&!SETN	0.0100	n/a	n/a	0.0561
D(LH)	CLKN&!RN&SETN	0.0100	n/a	n/a	0.2135
D(LH)	!CLKN&RN&!SETN	0.0100	n/a	n/a	0.0046
D(LH)	CLKN&RN&!SETN	0.0100	n/a	n/a	0.0561
D(LH)	!CLKN&RN&SETN	0.0100	n/a	n/a	0.0046
D(LH)	CLKN&RN&SETN	0.0100	n/a	n/a	0.2183
RN(LH)	!CLKN&!D&SETN	0.0100	n/a	n/a	-0.0537
RN(LH)	!CLKN&D&SETN	0.0100	n/a	n/a	-0.0537
RN(LH)	CLKN&!D&SETN	0.0100	n/a	n/a	-0.0537
RN(LH)	CLKN&D&SETN	0.0100	n/a	n/a	-0.0486
SETN(LH)	!CLKN&!D&!RN	0.0100	n/a	n/a	0.1172
SETN(LH)	!CLKN&D&!RN	0.0100	n/a	n/a	0.1172
SETN(LH)	CLKN&!D&!RN	0.0100	n/a	n/a	0.1222
SETN(LH)	CLKN&D&!RN	0.0100	n/a	n/a	0.0670
SETN(LH)	!CLKN&!D&RN	0.0100	n/a	n/a	-0.0342
SETN(LH)	!CLKN&D&RN	0.0100	n/a	n/a	-0.0342
SETN(LH)	CLKN&!D&RN	0.0100	n/a	n/a	0.0148
SETN(LH)	CLKN&D&RN	0.0100	n/a	n/a	-0.0342

LEAKAGE POWER

When Condition	Power (nW)
!CLKN&!D&!RN&!SETN	0.5622
!CLKN&!D&!RN&SETN	0.5311
!CLKN&D&!RN&!SETN	0.5642
!CLKN&D&!RN&SETN	0.5331
CLKN&!D&!RN&!SETN	0.4811
CLKN&!D&!RN&SETN	0.4905
CLKN&D&!RN&!SETN	0.4786
CLKN&D&!RN&SETN	0.5074
!CLKN&D&RN&SETN	0.7322
!CLKN&!D&RN&!SETN	0.5179
!CLKN&D&RN&!SETN	0.5162
CLKN&!D&RN&!SETN	0.4633
CLKN&D&RN&!SETN	0.4597
!CLKN&!D&RN&SETN	0.5583
CLKN&!D&RN&SETN	0.6340
CLKN&D&RN&SETN	0.6180

gf180mcu_fd_sc_mcu7t5v0__dffnrsnq_4

gf180mcu_fd_sc_mcu7t5v0__dffnrsnq_4 symbol

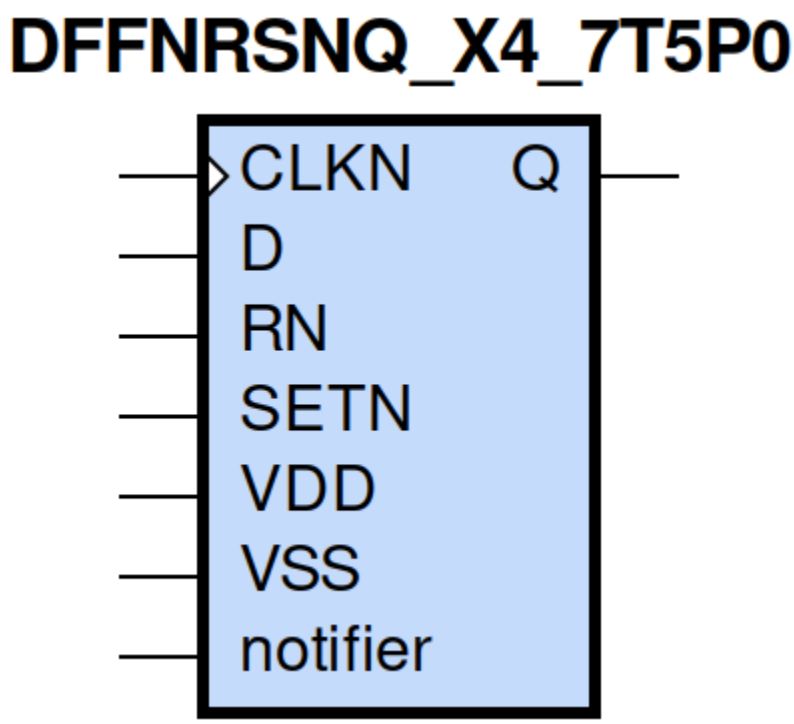

gf180mcu_fd_sc_mcu7t5v0__dffnrsnq_4 schematic

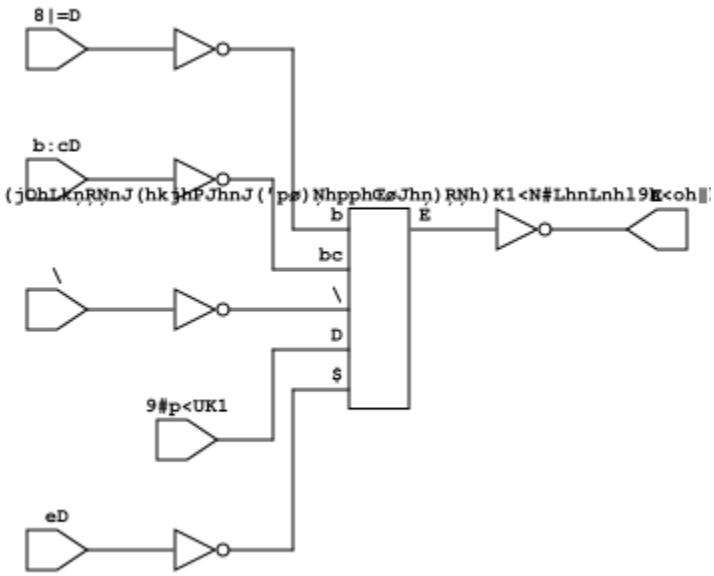

gf180mcu_fd_sc_mcu7t5v0__dffnrsnq_4 layout

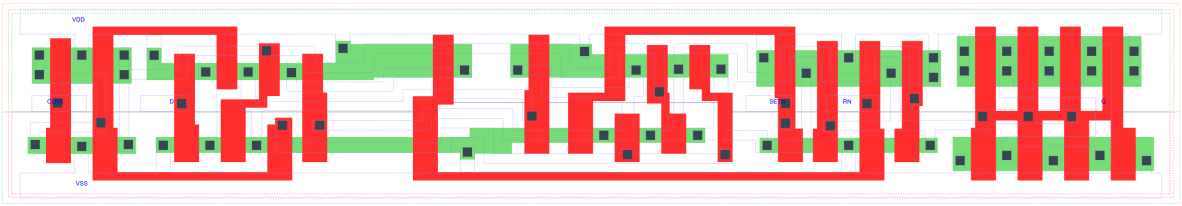

DFFNRSNQ_X4 is a negative edge triggered D-type flip flop, active low set/reset and 4X drive strength

Attributes

Attribute	Value
area	107.564800 μm^2

TRUTH TABLE

Input				Output
RN	SETN	D	CLKN	Q
H	H	L	↓	L
H	H	H	↓	H
L	H	X	X	L
H	L	X	X	H
L	L	X	X	L

FUNCTIONAL SCHEMATIC

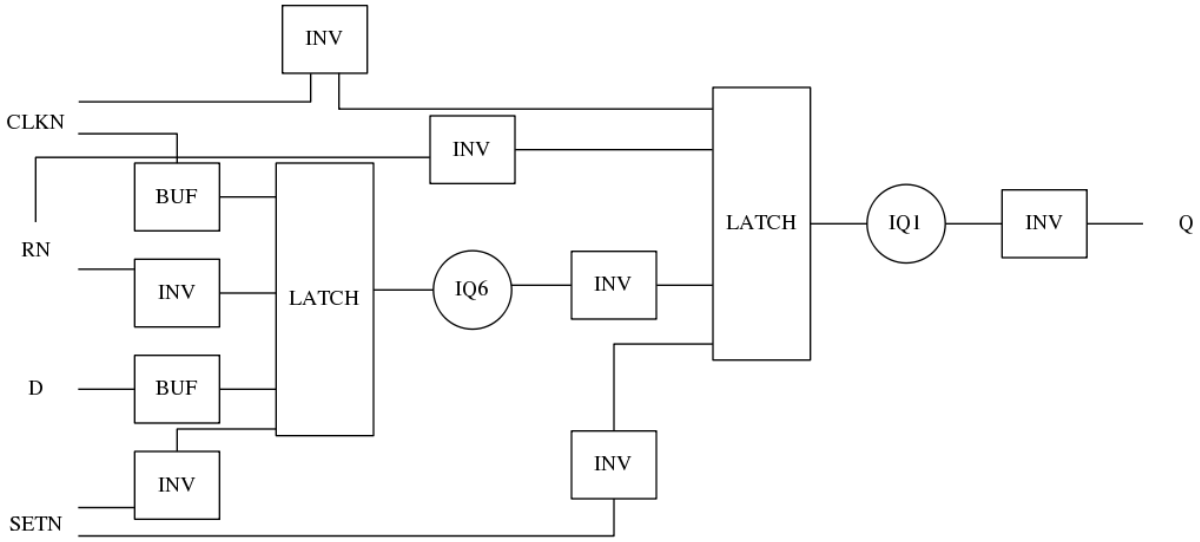

CONSTRAINTS

Constraint Pin	Related Pin	setup(ns)	hold(ns)
D(HL)	CLKN(HL)	0.5270	-0.0110
D(LH)	CLKN(HL)	0.1090	0.2000
SETN(LH)	RN(LH)	-0.0170	0.2000
SETN(LH)	RN(LH)	-0.1260	0.2750
SETN(LH)	RN(LH)	-0.0170	0.2000
SETN(LH)	RN(LH)	-0.1260	0.2750
RN(LH)	SETN(LH)	0.2000	-0.0170
RN(LH)	SETN(LH)	0.2750	-0.1260
RN(LH)	SETN(LH)	0.2000	-0.0170
RN(LH)	SETN(LH)	0.2750	-0.1260

Constraint Pin	Related Pin	recovery(ns)	removal(ns)
SETN(LH)	CLKN(HL)	0.1550	0.1490
RN(LH)	CLKN(HL)	-0.4410	0.8590

Constraint Pin	Related Pin	Minimum Pulse Width(ns)
CLKN(LHL)	CLKN(LH)	0.7300
CLKN(LHL)	CLKN(LH)	0.3760
CLKN(HLH)	CLKN(HL)	0.5340
CLKN(HLH)	CLKN(HL)	0.7390
SETN(HLH)	SETN(HL)	0.5440
SETN(HLH)	SETN(HL)	0.5540
SETN(HLH)	SETN(HL)	0.5440
SETN(HLH)	SETN(HL)	0.5540
RN(HLH)	RN(HL)	0.5930
RN(HLH)	RN(HL)	0.4460
RN(HLH)	RN(HL)	0.5930
RN(HLH)	RN(HL)	0.4460

PIN CAPACITANCE (pf)

Pin	Type	Capacitance (pf)
CLKN	input	0.0034
D	input	0.0024
SETN	input	0.0065
RN	input	0.0076

DELAY AND OUTPUT TRANSITION TIME corresponding to min slew and load

Input Pin	Output	When Condition	Tin (ns)	Out Load (pf)	Delay (ns)	Tout (ns)
CLKN(HL)	Q(LH)	D&RN&SETN	0.0100	0.0010	1.0989	0.0751
CLKN(HL)	Q(HL)	!D&RN&SETN	0.0100	0.0010	0.7919	0.0590
SETN(HL)	Q(LH)	!CLKN&!D&RN	0.0100	0.0010	1.0003	0.0738
SETN(HL)	Q(LH)	CLKN&!D&RN	0.0100	0.0010	0.8312	0.0740
SETN(HL)	Q(LH)	!CLKN&D&RN	0.0100	0.0010	1.0005	0.0733
SETN(HL)	Q(LH)	CLKN&D&RN	0.0100	0.0010	0.8313	0.0741
RN(HL)	Q(HL)	!CLKN&!D&SETN	0.0100	0.0010	0.3178	0.0562
RN(HL)	Q(HL)	CLKN&!D&SETN	0.0100	0.0010	0.3178	0.0562
RN(HL)	Q(HL)	!CLKN&D&SETN	0.0100	0.0010	0.3177	0.0563
RN(HL)	Q(HL)	CLKN&D&SETN	0.0100	0.0010	0.3177	0.0563
RN(HL)	Q(HL)	!CLKN&!D&!SETN	0.0100	0.0010	0.3170	0.0556
RN(HL)	Q(HL)	!CLKN&D&!SETN	0.0100	0.0010	0.3170	0.0556
RN(HL)	Q(HL)	CLKN&!D&!SETN	0.0100	0.0010	0.3169	0.0557
RN(HL)	Q(HL)	CLKN&D&!SETN	0.0100	0.0010	0.3169	0.0557
RN(LH)	Q(LH)	!CLKN&!D&!SETN	0.0100	0.0010	0.5551	0.0736
RN(LH)	Q(LH)	!CLKN&D&!SETN	0.0100	0.0010	0.5551	0.0736
RN(LH)	Q(LH)	CLKN&!D&!SETN	0.0100	0.0010	0.5500	0.0734
RN(LH)	Q(LH)	CLKN&D&!SETN	0.0100	0.0010	0.5500	0.0734

DYNAMIC ENERGY

Input Pin	When Condition	Tin (ns)	Output	Out Load (pf)	Energy (uW/MHz)
SETN	!CLKN&!D&RN	0.0100	Q(LH)	0.0010	1.4292
SETN	CLKN&!D&RN	0.0100	Q(LH)	0.0010	1.3266
SETN	!CLKN&D&RN	0.0100	Q(LH)	0.0010	1.4295
SETN	CLKN&D&RN	0.0100	Q(LH)	0.0010	1.1925
RN	!CLKN&!D&SETN	0.0100	Q(HL)	0.0010	1.2422
RN	CLKN&!D&SETN	0.0100	Q(HL)	0.0010	0.9687
RN	!CLKN&D&SETN	0.0100	Q(HL)	0.0010	1.2413
RN	CLKN&D&SETN	0.0100	Q(HL)	0.0010	0.9695
RN	!CLKN&!D&!SETN	0.0100	Q(HL)	0.0010	1.0056
RN	!CLKN&D&!SETN	0.0100	Q(HL)	0.0010	1.0056
RN	CLKN&!D&!SETN	0.0100	Q(HL)	0.0010	0.8237
RN	CLKN&D&!SETN	0.0100	Q(HL)	0.0010	0.8225
RN	!CLKN&!D&!SETN	0.0100	Q(LH)	0.0010	0.9657
RN	!CLKN&D&!SETN	0.0100	Q(LH)	0.0010	0.9657
RN	CLKN&!D&!SETN	0.0100	Q(LH)	0.0010	0.8721
RN	CLKN&D&!SETN	0.0100	Q(LH)	0.0010	0.8739
CLKN	D&RN&SETN	0.0100	Q(LH)	0.0010	1.6638
CLKN	!D&RN&SETN	0.0100	Q(HL)	0.0010	1.3200
SETN(HL)	!CLKN&!D&!RN	0.0100	n/a	n/a	0.3945
SETN(HL)	!CLKN&D&!RN	0.0100	n/a	n/a	0.3945
SETN(HL)	CLKN&!D&!RN	0.0100	n/a	n/a	0.3784
SETN(HL)	CLKN&D&!RN	0.0100	n/a	n/a	0.2488
SETN(HL)	!CLKN&!D&RN	0.0100	n/a	n/a	0.0502
SETN(HL)	CLKN&!D&RN	0.0100	n/a	n/a	0.1843

continues on next page

Table 39 – continued from previous page

SETN(HL)	!CLKN&D&RN	0.0100	n/a	n/a	0.0501
SETN(HL)	CLKN&D&RN	0.0100	n/a	n/a	0.0501
CLKN(LH)	!D&!RN&!SETN	0.0100	n/a	n/a	0.2508
CLKN(LH)	!D&!RN&SETN	0.0100	n/a	n/a	0.2484
CLKN(LH)	D&!RN&!SETN	0.0100	n/a	n/a	0.3201
CLKN(LH)	D&!RN&SETN	0.0100	n/a	n/a	0.4782
CLKN(LH)	!D&RN&!SETN	0.0100	n/a	n/a	0.3660
CLKN(LH)	D&RN&!SETN	0.0100	n/a	n/a	0.2529
CLKN(LH)	!D&RN&SETN	0.0100	n/a	n/a	0.2483
CLKN(LH)	D&RN&SETN	0.0100	n/a	n/a	0.2530
CLKN(HL)	!D&!RN&!SETN	0.0100	n/a	n/a	0.3846
CLKN(HL)	!D&!RN&SETN	0.0100	n/a	n/a	0.3554
CLKN(HL)	D&!RN&!SETN	0.0100	n/a	n/a	0.5073
CLKN(HL)	D&!RN&SETN	0.0100	n/a	n/a	0.7671
CLKN(HL)	!D&RN&!SETN	0.0100	n/a	n/a	0.4220
CLKN(HL)	D&RN&!SETN	0.0100	n/a	n/a	0.3705
CLKN(HL)	!D&RN&SETN	0.0100	n/a	n/a	0.3555
CLKN(HL)	D&RN&SETN	0.0100	n/a	n/a	0.3706
D(HL)	!CLKN&!RN&!SETN	0.0100	n/a	n/a	0.0526
D(HL)	!CLKN&!RN&SETN	0.0100	n/a	n/a	0.0526
D(HL)	CLKN&!RN&!SETN	0.0100	n/a	n/a	0.1681
D(HL)	CLKN&!RN&SETN	0.0100	n/a	n/a	0.2561
D(HL)	!CLKN&RN&!SETN	0.0100	n/a	n/a	0.0526
D(HL)	CLKN&RN&!SETN	0.0100	n/a	n/a	0.1681
D(HL)	!CLKN&RN&SETN	0.0100	n/a	n/a	0.0526
D(HL)	CLKN&RN&SETN	0.0100	n/a	n/a	0.2493
RN(HL)	!CLKN&!D&SETN	0.0100	n/a	n/a	0.0576
RN(HL)	CLKN&!D&SETN	0.0100	n/a	n/a	0.0558
RN(HL)	!CLKN&D&SETN	0.0100	n/a	n/a	0.0575
RN(HL)	CLKN&D&SETN	0.0100	n/a	n/a	0.0535
D(LH)	!CLKN&!RN&!SETN	0.0100	n/a	n/a	0.0046
D(LH)	!CLKN&!RN&SETN	0.0100	n/a	n/a	0.0046
D(LH)	CLKN&!RN&!SETN	0.0100	n/a	n/a	0.0561
D(LH)	CLKN&!RN&SETN	0.0100	n/a	n/a	0.2135
D(LH)	!CLKN&RN&!SETN	0.0100	n/a	n/a	0.0047
D(LH)	CLKN&RN&!SETN	0.0100	n/a	n/a	0.0561
D(LH)	!CLKN&RN&SETN	0.0100	n/a	n/a	0.0047
D(LH)	CLKN&RN&SETN	0.0100	n/a	n/a	0.2183
RN(LH)	!CLKN&!D&SETN	0.0100	n/a	n/a	-0.0537
RN(LH)	!CLKN&D&SETN	0.0100	n/a	n/a	-0.0537
RN(LH)	CLKN&!D&SETN	0.0100	n/a	n/a	-0.0537
RN(LH)	CLKN&D&SETN	0.0100	n/a	n/a	-0.0486
SETN(LH)	!CLKN&!D&!RN	0.0100	n/a	n/a	0.1172
SETN(LH)	!CLKN&D&!RN	0.0100	n/a	n/a	0.1172
SETN(LH)	CLKN&!D&!RN	0.0100	n/a	n/a	0.1222
SETN(LH)	CLKN&D&!RN	0.0100	n/a	n/a	0.0670
SETN(LH)	!CLKN&!D&RN	0.0100	n/a	n/a	-0.0342
SETN(LH)	!CLKN&D&RN	0.0100	n/a	n/a	-0.0342
SETN(LH)	CLKN&!D&RN	0.0100	n/a	n/a	0.0148
SETN(LH)	CLKN&D&RN	0.0100	n/a	n/a	-0.0343

LEAKAGE POWER

When Condition	Power (nW)
!CLKN&!D&!RN&!SETN	0.6152
!CLKN&!D&!RN&SETN	0.5841
!CLKN&D&!RN&!SETN	0.6172
!CLKN&D&!RN&SETN	0.5861
CLKN&!D&!RN&!SETN	0.5341
CLKN&!D&!RN&SETN	0.5435
CLKN&D&!RN&!SETN	0.5316
CLKN&D&!RN&SETN	0.5603
!CLKN&D&RN&SETN	0.7831
!CLKN&!D&RN&!SETN	0.5688
!CLKN&D&RN&!SETN	0.5672
CLKN&!D&RN&!SETN	0.5142
CLKN&D&RN&!SETN	0.5106
!CLKN&!D&RN&SETN	0.6112
CLKN&!D&RN&SETN	0.6848
CLKN&D&RN&SETN	0.6689

gf180mcu_fd_sc_mcu7t5v0__dffnsnq_1

gf180mcu_fd_sc_mcu7t5v0__dffnsnq_1 symbol

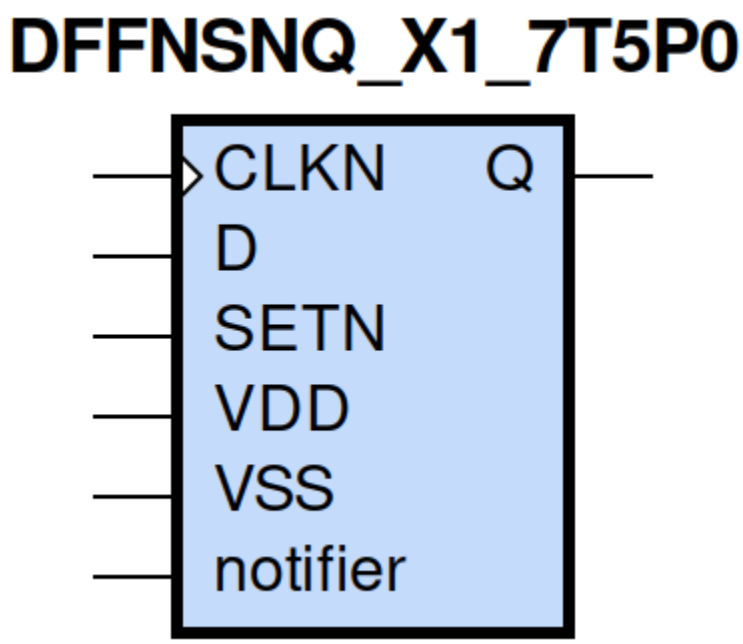

gf180mcu_fd_sc_mcu7t5v0__dffnsnq_1 schematic

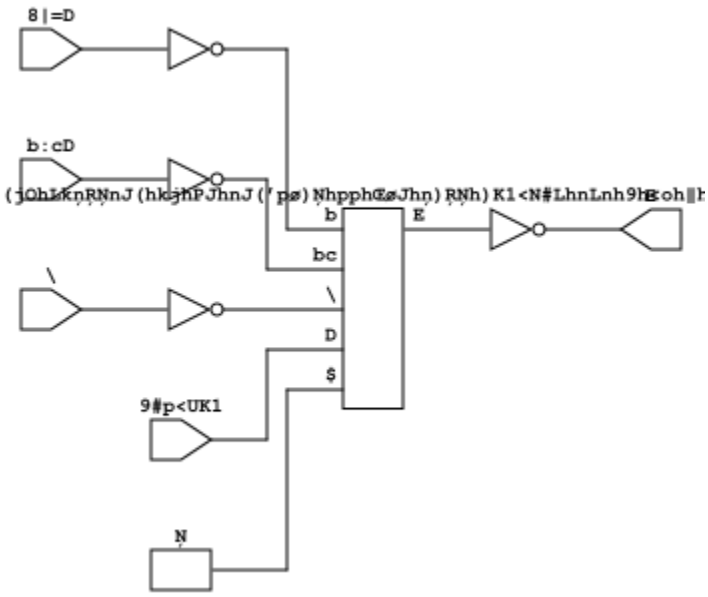

gf180mcu_fd_sc_mcu7t5v0__dffnsnq_1 layout

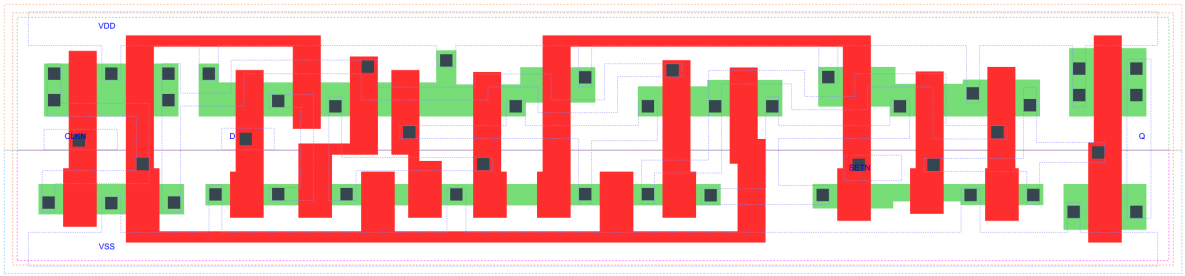

DFFNSNQ_X1 is a negative edge triggered D-type flip flop, active low set and 1X drive strength

Attributes

Attribute	Value
area	79.027200 μm^2

TRUTH TABLE

Input			Output
SETN	D	CLKN	Q
H	L	↓	L
H	H	↓	H
L	X	X	H

FUNCTIONAL SCHEMATIC

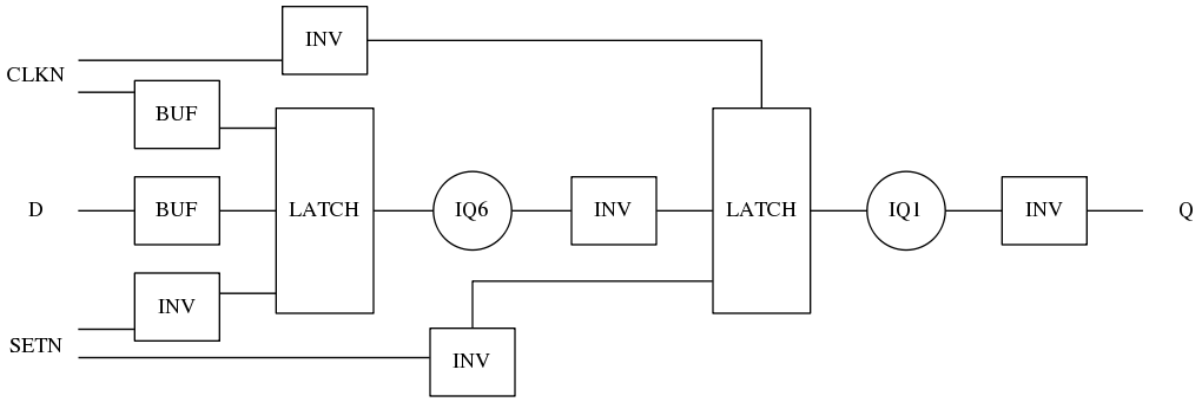

CONSTRAINTS

Constraint Pin	Related Pin	setup(ns)	hold(ns)
D(HL)	CLKN(HL)	0.3150	0.0060
D(LH)	CLKN(HL)	0.2180	0.1320

Constraint Pin	Related Pin	recovery(ns)	removal(ns)
SETN(LH)	CLKN(HL)	0.0970	0.1140

Constraint Pin	Related Pin	Minimum Pulse Width(ns)
CLKN(LHL)	CLKN(LH)	0.4550
CLKN(LHL)	CLKN(LH)	0.4120
CLKN(HLH)	CLKN(HL)	0.4370
CLKN(HLH)	CLKN(HL)	0.4270
SETN(HLH)	SETN(HL)	0.3680
SETN(HLH)	SETN(HL)	0.3390
SETN(HLH)	SETN(HL)	0.3680
SETN(HLH)	SETN(HL)	0.3390

PIN CAPACITANCE (pf)

Pin	Type	Capacitance (pf)
CLKN	input	0.0038
D	input	0.0026
SETN	input	0.0064

DELAY AND OUTPUT TRANSITION TIME corresponding to min slew and load

Input Pin	Output	When Condition	Tin (ns)	Out Load (pf)	Delay (ns)	Tout (ns)
CLKN(HL)	Q(LH)	D&SETN	0.0100	0.0010	0.6557	0.0465
CLKN(HL)	Q(HL)	!D&SETN	0.0100	0.0010	0.6131	0.0459
SETN(HL)	Q(LH)	!CLKN&!D	0.0100	0.0010	0.5421	0.0457
SETN(HL)	Q(LH)	CLKN&!D	0.0100	0.0010	0.4810	0.0451
SETN(HL)	Q(LH)	!CLKN&D	0.0100	0.0010	0.5418	0.0456
SETN(HL)	Q(LH)	CLKN&D	0.0100	0.0010	0.4814	0.0450

DYNAMIC ENERGY

Input Pin	When Condition	Tin (ns)	Output	Out Load (pf)	Energy (uW/MHz)
SETN	!CLKN&!D	0.0100	Q(LH)	0.0010	0.5913
SETN	CLKN&!D	0.0100	Q(LH)	0.0010	0.5101
SETN	!CLKN&D	0.0100	Q(LH)	0.0010	0.5911
SETN	CLKN&D	0.0100	Q(LH)	0.0010	0.4137
CLKN	D&SETN	0.0100	Q(LH)	0.0010	0.7602
CLKN	!D&SETN	0.0100	Q(HL)	0.0010	0.6526
SETN(HL)	!CLKN&!D	0.0100	n/a	n/a	0.0473
SETN(HL)	CLKN&!D	0.0100	n/a	n/a	0.1425

continues on next page

Table 40 – continued from previous page

SETN(HL)	!CLKN&D	0.0100	n/a	n/a	0.0473
SETN(HL)	CLKN&D	0.0100	n/a	n/a	0.0472
CLKN(LH)	!D&!SETN	0.0100	n/a	n/a	0.3092
CLKN(LH)	D&!SETN	0.0100	n/a	n/a	0.2258
CLKN(LH)	!D&SETN	0.0100	n/a	n/a	0.2238
CLKN(LH)	D&SETN	0.0100	n/a	n/a	0.2255
CLKN(HL)	!D&!SETN	0.0100	n/a	n/a	0.3753
CLKN(HL)	D&!SETN	0.0100	n/a	n/a	0.3241
CLKN(HL)	!D&SETN	0.0100	n/a	n/a	0.3190
CLKN(HL)	D&SETN	0.0100	n/a	n/a	0.3240
D(HL)	!CLKN&!SETN	0.0100	n/a	n/a	0.0609
D(HL)	CLKN&!SETN	0.0100	n/a	n/a	0.1478
D(HL)	!CLKN&SETN	0.0100	n/a	n/a	0.0610
D(HL)	CLKN&SETN	0.0100	n/a	n/a	0.2183
D(LH)	!CLKN&!SETN	0.0100	n/a	n/a	0.0053
D(LH)	CLKN&!SETN	0.0100	n/a	n/a	0.0538
D(LH)	!CLKN&SETN	0.0100	n/a	n/a	0.0053
D(LH)	CLKN&SETN	0.0100	n/a	n/a	0.1750
SETN(LH)	!CLKN&!D	0.0100	n/a	n/a	-0.0251
SETN(LH)	!CLKN&D	0.0100	n/a	n/a	-0.0251
SETN(LH)	CLKN&!D	0.0100	n/a	n/a	0.0304
SETN(LH)	CLKN&D	0.0100	n/a	n/a	-0.0252

LEAKAGE POWER

When Condition	Power (nW)
!CLKN&!D&!SETN	0.4463
!CLKN&D&!SETN	0.4449
CLKN&!D&!SETN	0.4094
CLKN&D&!SETN	0.4067
!CLKN&!D&SETN	0.5307
CLKN&!D&SETN	0.6143
CLKN&D&SETN	0.6042
!CLKN&D&SETN	0.6383

gf180mcu_fd_sc_mcu7t5v0__dffnsnq_2

gf180mcu_fd_sc_mcu7t5v0__dffnsnq_2 symbol

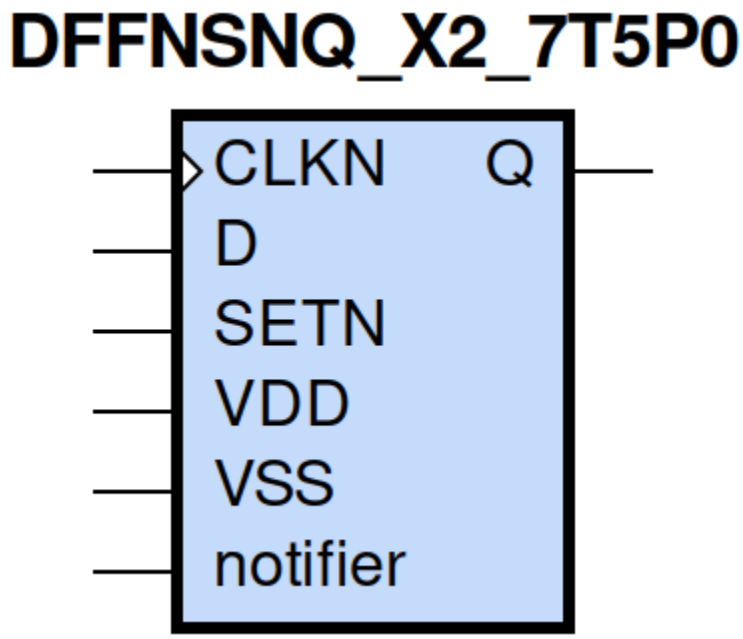

gf180mcu_fd_sc_mcu7t5v0__dffnsnq_2 schematic

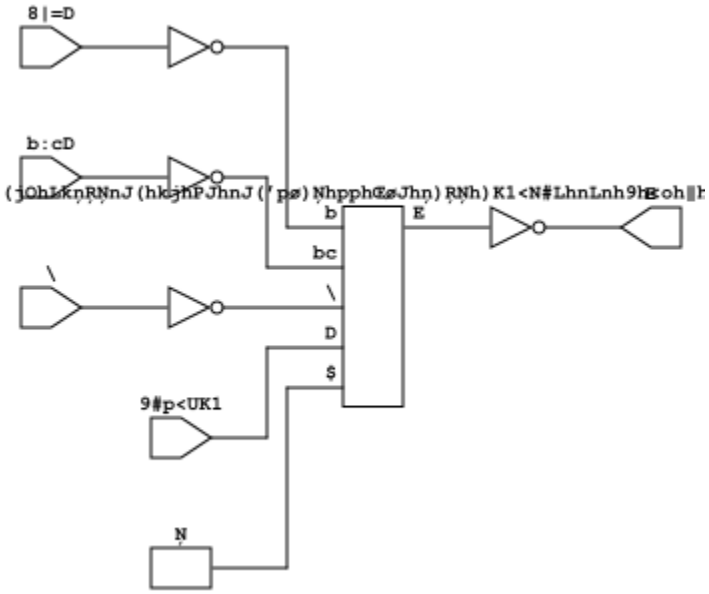

gf180mcu_fd_sc_mcu7t5v0__dffnsnq_2 layout

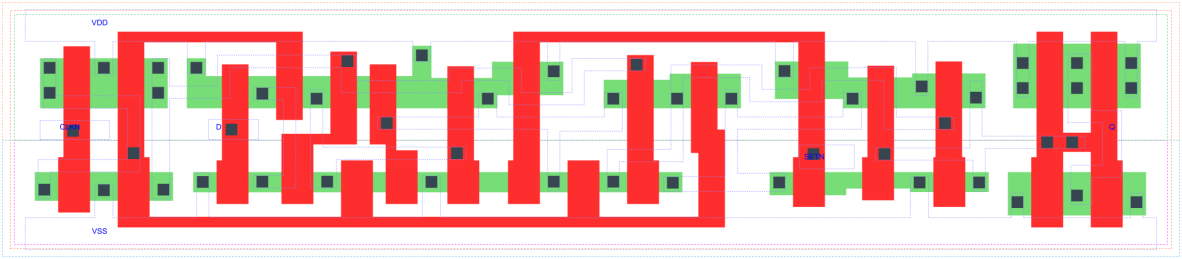

DFFNSNQ_X2 is a negative edge triggered D-type flip flop, active low set and 2X drive strength

Attributes

Attribute	Value
area	83.417600 μm^2

TRUTH TABLE

Input			Output
SETN	D	CLKN	Q
H	L	↓	L
H	H	↓	H
L	X	X	H

FUNCTIONAL SCHEMATIC

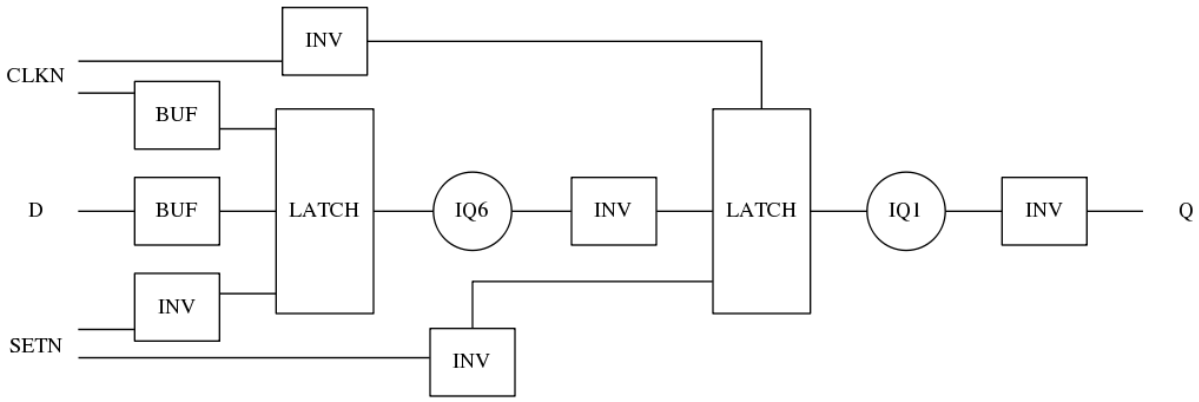

CONSTRAINTS

Constraint Pin	Related Pin	setup(ns)	hold(ns)
D(HL)	CLKN(HL)	0.3320	0.0230
D(LH)	CLKN(HL)	0.2290	0.1370

Constraint Pin	Related Pin	recovery(ns)	removal(ns)
SETN(LH)	CLKN(HL)	0.1030	0.1140

Constraint Pin	Related Pin	Minimum Pulse Width(ns)
CLKN(LHL)	CLKN(LH)	0.4610
CLKN(LHL)	CLKN(LH)	0.4310
CLKN(HLH)	CLKN(HL)	0.4760
CLKN(HLH)	CLKN(HL)	0.4850
SETN(HLH)	SETN(HL)	0.3880
SETN(HLH)	SETN(HL)	0.3880
SETN(HLH)	SETN(HL)	0.3880
SETN(HLH)	SETN(HL)	0.3880

PIN CAPACITANCE (pf)

Pin	Type	Capacitance (pf)
CLKN	input	0.0038
D	input	0.0026
SETN	input	0.0064

DELAY AND OUTPUT TRANSITION TIME corresponding to min slew and load

Input Pin	Output	When Condition	Tin (ns)	Out Load (pf)	Delay (ns)	Tout (ns)
CLKN(HL)	Q(LH)	D&SETN	0.0100	0.0010	0.7110	0.0431
CLKN(HL)	Q(HL)	!D&SETN	0.0100	0.0010	0.6654	0.0486
SETN(HL)	Q(LH)	!CLKN&!D	0.0100	0.0010	0.5939	0.0419
SETN(HL)	Q(LH)	CLKN&!D	0.0100	0.0010	0.5331	0.0413
SETN(HL)	Q(LH)	!CLKN&D	0.0100	0.0010	0.5939	0.0418
SETN(HL)	Q(LH)	CLKN&D	0.0100	0.0010	0.5334	0.0417

DYNAMIC ENERGY

Input Pin	When Condition	Tin (ns)	Output	Out Load (pf)	Energy (uW/MHz)
SETN	!CLKN&!D	0.0100	Q(LH)	0.0010	0.7160
SETN	CLKN&!D	0.0100	Q(LH)	0.0010	0.6351
SETN	!CLKN&D	0.0100	Q(LH)	0.0010	0.7160
SETN	CLKN&D	0.0100	Q(LH)	0.0010	0.5386
CLKN	D&SETN	0.0100	Q(LH)	0.0010	0.8951
CLKN	!D&SETN	0.0100	Q(HL)	0.0010	0.8245
SETN(HL)	!CLKN&!D	0.0100	n/a	n/a	0.0473
SETN(HL)	CLKN&!D	0.0100	n/a	n/a	0.1425
SETN(HL)	!CLKN&D	0.0100	n/a	n/a	0.0473
SETN(HL)	CLKN&D	0.0100	n/a	n/a	0.0472
CLKN(LH)	!D&!SETN	0.0100	n/a	n/a	0.3092
CLKN(LH)	D&!SETN	0.0100	n/a	n/a	0.2258
CLKN(LH)	!D&SETN	0.0100	n/a	n/a	0.2240
CLKN(LH)	D&SETN	0.0100	n/a	n/a	0.2258
CLKN(HL)	!D&!SETN	0.0100	n/a	n/a	0.3753
CLKN(HL)	D&!SETN	0.0100	n/a	n/a	0.3241
CLKN(HL)	!D&SETN	0.0100	n/a	n/a	0.3190
CLKN(HL)	D&SETN	0.0100	n/a	n/a	0.3240
D(HL)	!CLKN&!SETN	0.0100	n/a	n/a	0.0609
D(HL)	CLKN&!SETN	0.0100	n/a	n/a	0.1478
D(HL)	!CLKN&SETN	0.0100	n/a	n/a	0.0609
D(HL)	CLKN&SETN	0.0100	n/a	n/a	0.2183
D(LH)	!CLKN&!SETN	0.0100	n/a	n/a	0.0053
D(LH)	CLKN&!SETN	0.0100	n/a	n/a	0.0537
D(LH)	!CLKN&SETN	0.0100	n/a	n/a	0.0054
D(LH)	CLKN&SETN	0.0100	n/a	n/a	0.1750
SETN(LH)	!CLKN&!D	0.0100	n/a	n/a	-0.0251
SETN(LH)	!CLKN&D	0.0100	n/a	n/a	-0.0251
SETN(LH)	CLKN&!D	0.0100	n/a	n/a	0.0304
SETN(LH)	CLKN&D	0.0100	n/a	n/a	-0.0252

LEAKAGE POWER

When Condition	Power (nW)
!CLKN&!D&!SETN	0.4718
!CLKN&D&!SETN	0.4704
CLKN&!D&!SETN	0.4349
CLKN&D&!SETN	0.4322
!CLKN&!D&SETN	0.5572
CLKN&!D&SETN	0.6398
CLKN&D&SETN	0.6296
!CLKN&D&SETN	0.6633

gf180mcu_fd_sc_mcu7t5v0__dffnsnq_4

gf180mcu_fd_sc_mcu7t5v0__dffnsnq_4 symbol

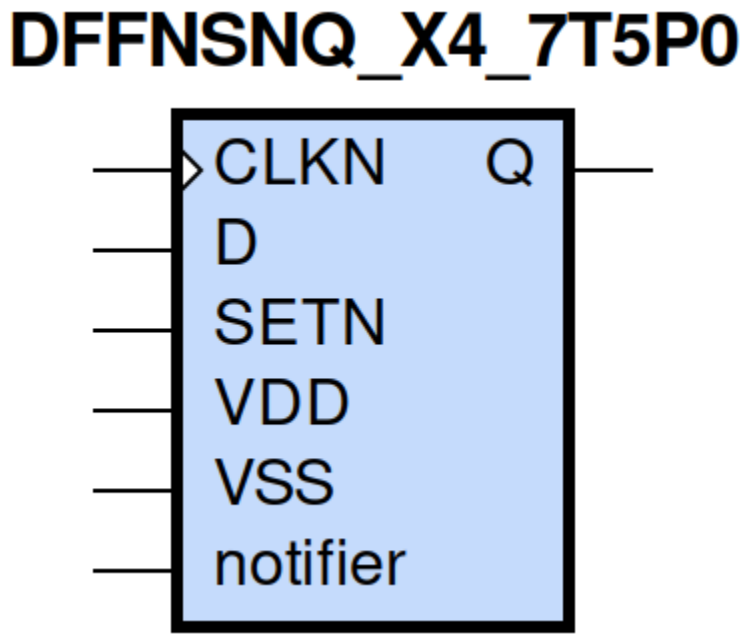

gf180mcu_fd_sc_mcu7t5v0__dffnsnq_4 schematic

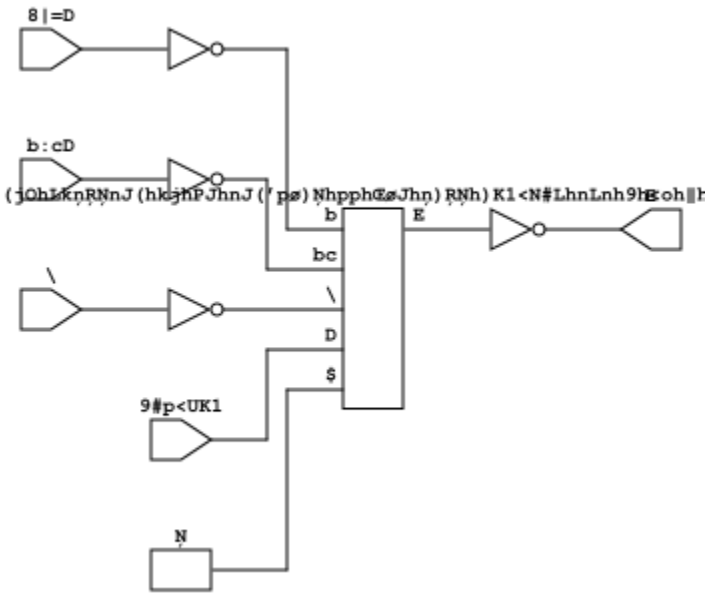

gf180mcu_fd_sc_mcu7t5v0__dffnsnq_4 layout

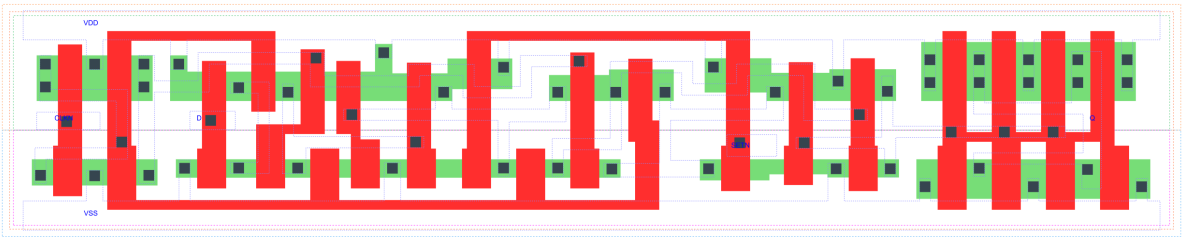

DFFNSNQ_X4 is a negative edge triggered D-type flip flop, active low set and 4X drive strength

Attributes

Attribute	Value
area	92.198400 μm^2

TRUTH TABLE

Input			Output
SETN	D	CLKN	Q
H	L	↓	L
H	H	↓	H
L	X	X	H

FUNCTIONAL SCHEMATIC

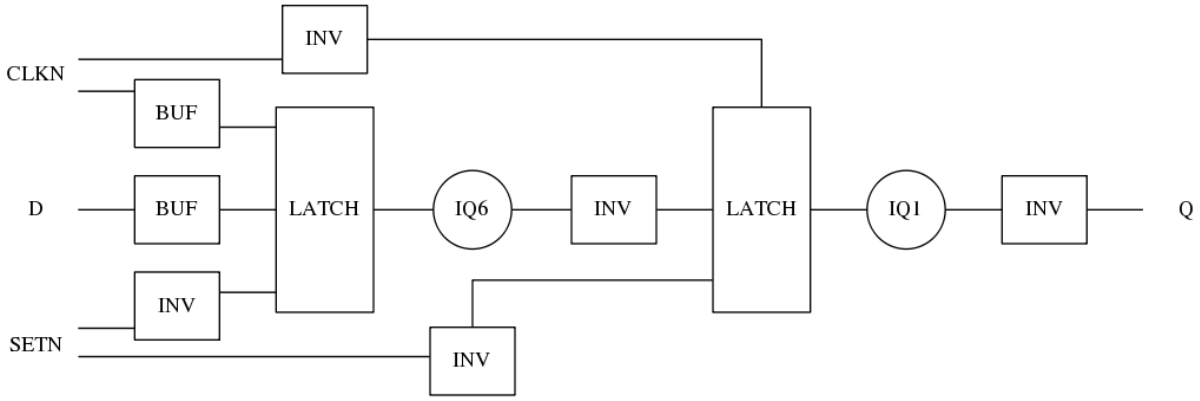

CONSTRAINTS

Constraint Pin	Related Pin	setup(ns)	hold(ns)
D(HL)	CLKN(HL)	0.3210	0.0230
D(LH)	CLKN(HL)	0.2290	0.1320

Constraint Pin	Related Pin	recovery(ns)	removal(ns)
SETN(LH)	CLKN(HL)	0.0970	0.1140

Constraint Pin	Related Pin	Minimum Pulse Width(ns)
CLKN(LHL)	CLKN(LH)	0.4610
CLKN(LHL)	CLKN(LH)	0.4310
CLKN(HLH)	CLKN(HL)	0.5730
CLKN(HLH)	CLKN(HL)	0.6120
SETN(HLH)	SETN(HL)	0.4070
SETN(HLH)	SETN(HL)	0.4850
SETN(HLH)	SETN(HL)	0.4070
SETN(HLH)	SETN(HL)	0.4850

PIN CAPACITANCE (pf)

Pin	Type	Capacitance (pf)
CLKN	input	0.0038
D	input	0.0026
SETN	input	0.0064

DELAY AND OUTPUT TRANSITION TIME corresponding to min slew and load

Input Pin	Output	When Condition	Tin (ns)	Out Load (pf)	Delay (ns)	Tout (ns)
CLKN(HL)	Q(LH)	D&SETN	0.0100	0.0010	0.8403	0.0540
CLKN(HL)	Q(HL)	!D&SETN	0.0100	0.0010	0.7965	0.0669
SETN(HL)	Q(LH)	!CLKN&!D	0.0100	0.0010	0.7163	0.0524
SETN(HL)	Q(LH)	CLKN&!D	0.0100	0.0010	0.6569	0.0525
SETN(HL)	Q(LH)	!CLKN&D	0.0100	0.0010	0.7161	0.0522
SETN(HL)	Q(LH)	CLKN&D	0.0100	0.0010	0.6570	0.0524

DYNAMIC ENERGY

Input Pin	When Condition	Tin (ns)	Output	Out Load (pf)	Energy (uW/MHz)
SETN	!CLKN&!D	0.0100	Q(LH)	0.0010	1.0906
SETN	CLKN&!D	0.0100	Q(LH)	0.0010	1.0125
SETN	!CLKN&D	0.0100	Q(LH)	0.0010	1.0908
SETN	CLKN&D	0.0100	Q(LH)	0.0010	0.9156
CLKN	D&SETN	0.0100	Q(LH)	0.0010	1.2966
CLKN	!D&SETN	0.0100	Q(HL)	0.0010	1.3502
SETN(HL)	!CLKN&!D	0.0100	n/a	n/a	0.0473
SETN(HL)	CLKN&!D	0.0100	n/a	n/a	0.1425

continues on next page

Table 42 – continued from previous page

SETN(HL)	!CLKN&D	0.0100	n/a	n/a	0.0473
SETN(HL)	CLKN&D	0.0100	n/a	n/a	0.0472
CLKN(LH)	!D&!SETN	0.0100	n/a	n/a	0.3092
CLKN(LH)	D&!SETN	0.0100	n/a	n/a	0.2258
CLKN(LH)	!D&SETN	0.0100	n/a	n/a	0.2240
CLKN(LH)	D&SETN	0.0100	n/a	n/a	0.2258
CLKN(HL)	!D&!SETN	0.0100	n/a	n/a	0.3753
CLKN(HL)	D&!SETN	0.0100	n/a	n/a	0.3241
CLKN(HL)	!D&SETN	0.0100	n/a	n/a	0.3189
CLKN(HL)	D&SETN	0.0100	n/a	n/a	0.3240
D(HL)	!CLKN&!SETN	0.0100	n/a	n/a	0.0609
D(HL)	CLKN&!SETN	0.0100	n/a	n/a	0.1478
D(HL)	!CLKN&SETN	0.0100	n/a	n/a	0.0610
D(HL)	CLKN&SETN	0.0100	n/a	n/a	0.2183
D(LH)	!CLKN&!SETN	0.0100	n/a	n/a	0.0054
D(LH)	CLKN&!SETN	0.0100	n/a	n/a	0.0538
D(LH)	!CLKN&SETN	0.0100	n/a	n/a	0.0054
D(LH)	CLKN&SETN	0.0100	n/a	n/a	0.1750
SETN(LH)	!CLKN&!D	0.0100	n/a	n/a	-0.0251
SETN(LH)	!CLKN&D	0.0100	n/a	n/a	-0.0251
SETN(LH)	CLKN&!D	0.0100	n/a	n/a	0.0303
SETN(LH)	CLKN&D	0.0100	n/a	n/a	-0.0252

LEAKAGE POWER

When Condition	Power (nW)
!CLKN&!D&!SETN	0.5227
!CLKN&D&!SETN	0.5213
CLKN&!D&!SETN	0.4858
CLKN&D&!SETN	0.4831
!CLKN&!D&SETN	0.6101
CLKN&!D&SETN	0.6907
CLKN&D&SETN	0.6806
!CLKN&D&SETN	0.7138

gf180mcu_fd_sc_mcu7t5v0__dffq_1

gf180mcu_fd_sc_mcu7t5v0__dffq_1 symbol

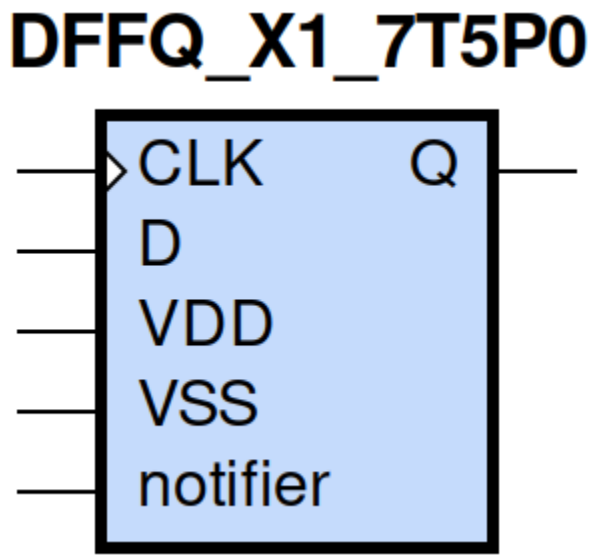

gf180mcu_fd_sc_mcu7t5v0__dffq_1 schematic

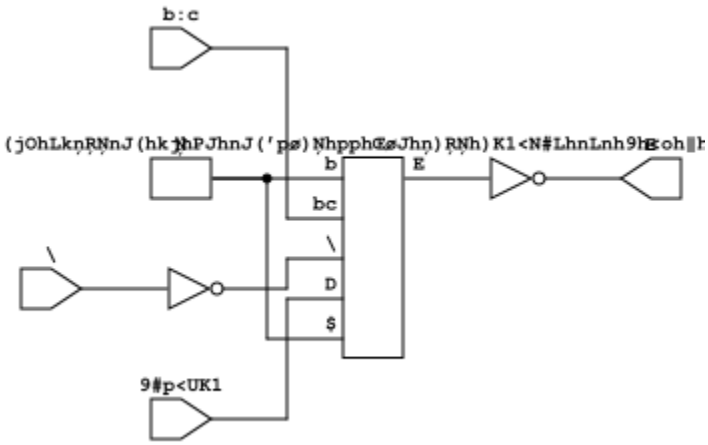

gf180mcu_fd_sc_mcu7t5v0__dffq_1 layout

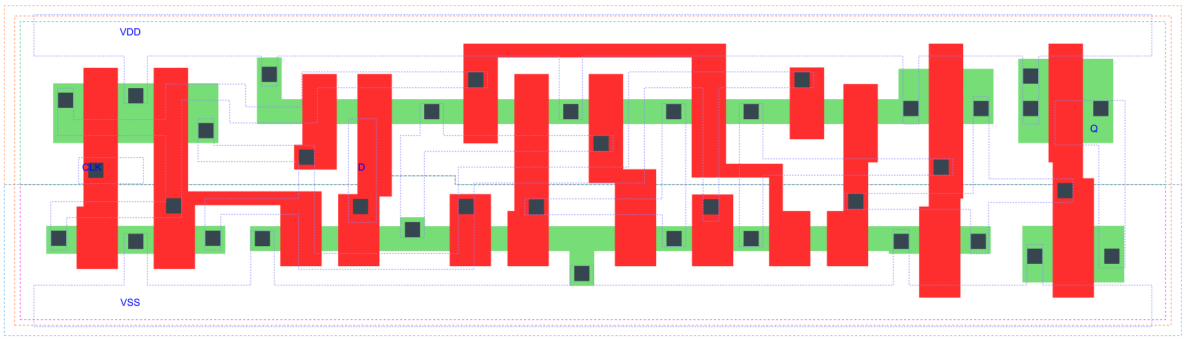

DFFQ_X1 is a poistive edge triggered D-type flip flop, 1X drive strength

Attributes

Attribute	Value
area	63.660800 μm^2

TRUTH TABLE

Input		Output
D	CLK	Q
L	↑	L
H	↑	H

FUNCTIONAL SCHEMATIC

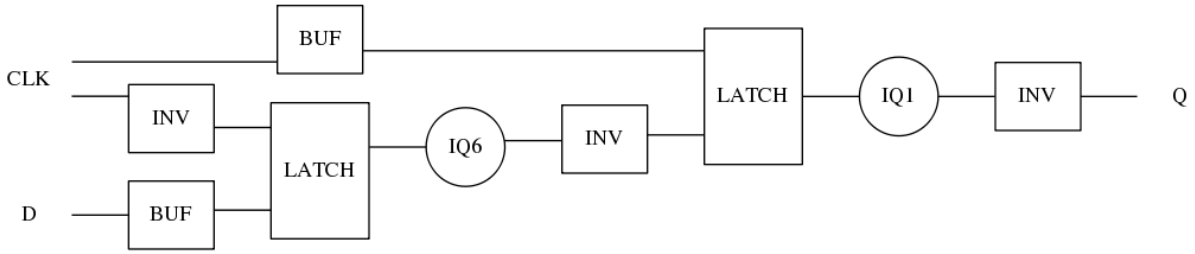

CONSTRAINTS

Constraint Pin	Related Pin	setup(ns)	hold(ns)
D(LH)	CLK(LH)	0.2180	0.0400
D(HL)	CLK(LH)	0.2290	0.0860

Constraint Pin	Related Pin	Minimum Pulse Width(ns)
CLK(LHL)	CLK(LH)	0.3000
CLK(LHL)	CLK(LH)	0.4950
CLK(HLH)	CLK(HL)	0.5530
CLK(HLH)	CLK(HL)	0.3570

PIN CAPACITANCE (pf)

Pin	Type	Capacitance (pf)
CLK	input	0.0032
D	input	0.0024

DELAY AND OUTPUT TRANSITION TIME corresponding to min slew and load

Input Pin	Output	When Condition	Tin (ns)	Out Load (pf)	Delay (ns)	Tout (ns)
CLK(LH)	Q(HL)	!D	0.0100	0.0010	0.5998	0.0392
CLK(LH)	Q(LH)	D	0.0100	0.0010	0.6763	0.0466

DYNAMIC ENERGY

Input Pin	When Condition	Tin (ns)	Output	Out Load (pf)	Energy (uW/MHz)
CLK	!D	0.0100	Q(HL)	0.0010	0.4882
CLK	D	0.0100	Q(LH)	0.0010	0.4972
D(LH)	!CLK	0.0100	n/a	n/a	0.1085
D(LH)	CLK	0.0100	n/a	n/a	-0.0067
CLK(LH)	!D	0.0100	n/a	n/a	0.2146
CLK(LH)	D	0.0100	n/a	n/a	0.2140
D(HL)	!CLK	0.0100	n/a	n/a	0.1615
D(HL)	CLK	0.0100	n/a	n/a	0.0096
CLK(HL)	!D	0.0100	n/a	n/a	0.2837
CLK(HL)	D	0.0100	n/a	n/a	0.2878

LEAKAGE POWER

When Condition	Power (nW)
!CLK&!D	0.3482
!CLK&D	0.3748
CLK&!D	0.4405
CLK&D	0.4693

gf180mcu_fd_sc_mcu7t5v0__dffq_2

gf180mcu_fd_sc_mcu7t5v0__dffq_2 symbol

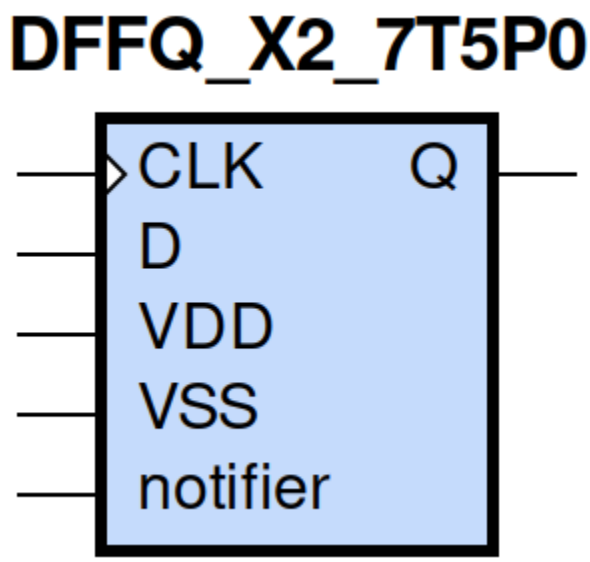

gf180mcu_fd_sc_mcu7t5v0__dffq_2 schematic

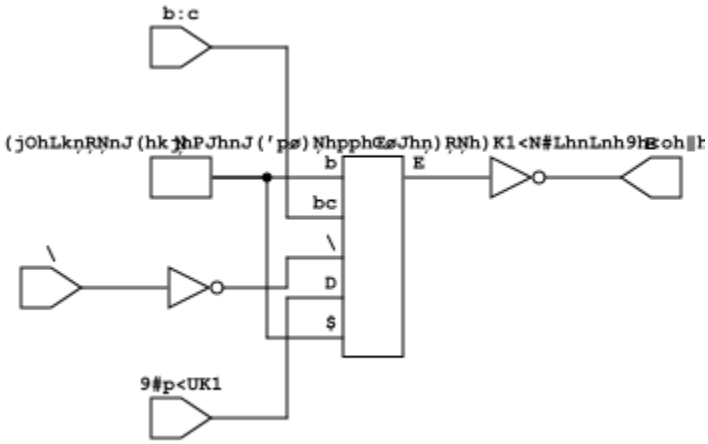

gf180mcu_fd_sc_mcu7t5v0__dffq_2 layout

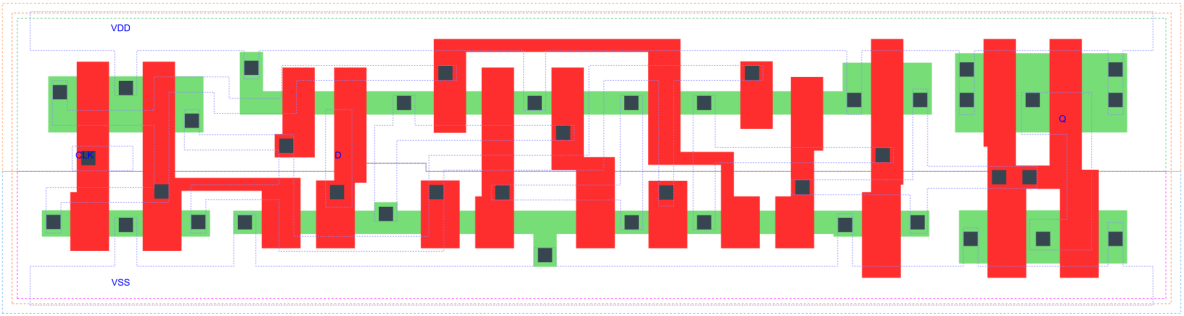

DFFQ_X2 is a poistive edge triggered D-type flip flop, 2X drive strength

Attributes

Attribute	Value
area	68.051200 μm^2

TRUTH TABLE

Input		Output
D	CLK	Q
L	↑	L
H	↑	H

FUNCTIONAL SCHEMATIC

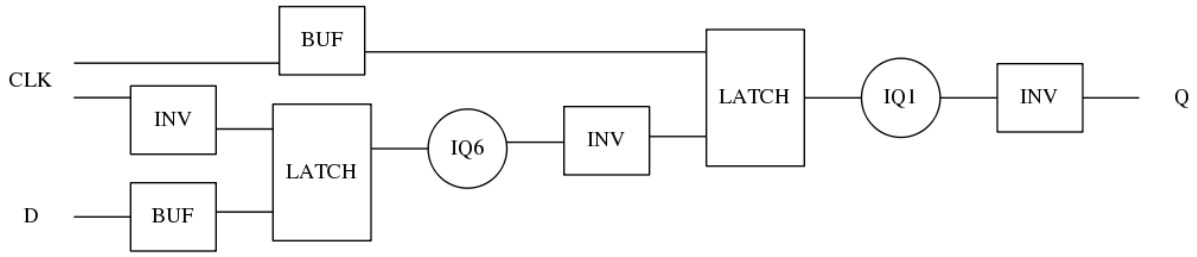

CONSTRAINTS

Constraint Pin	Related Pin	setup(ns)	hold(ns)
D(LH)	CLK(LH)	0.2350	0.0460
D(HL)	CLK(LH)	0.2350	0.0920

Constraint Pin	Related Pin	Minimum Pulse Width(ns)
CLK(LHL)	CLK(LH)	0.3100
CLK(LHL)	CLK(LH)	0.5540
CLK(HLH)	CLK(HL)	0.5590
CLK(HLH)	CLK(HL)	0.3760

PIN CAPACITANCE (pf)

Pin	Type	Capacitance (pf)
CLK	input	0.0032
D	input	0.0024

DELAY AND OUTPUT TRANSITION TIME corresponding to min slew and load

Input Pin	Output	When Condition	Tin (ns)	Out Load (pf)	Delay (ns)	Tout (ns)
CLK(LH)	Q(HL)	!D	0.0100	0.0010	0.6358	0.0398
CLK(LH)	Q(LH)	D	0.0100	0.0010	0.7275	0.0429

DYNAMIC ENERGY

Input Pin	When Condition	Tin (ns)	Output	Out Load (pf)	Energy (uW/MHz)
CLK	!D	0.0100	Q(HL)	0.0010	0.6237
CLK	D	0.0100	Q(LH)	0.0010	0.6252
D(LH)	!CLK	0.0100	n/a	n/a	0.1085
D(LH)	CLK	0.0100	n/a	n/a	-0.0067
CLK(LH)	!D	0.0100	n/a	n/a	0.2146
CLK(LH)	D	0.0100	n/a	n/a	0.2141
D(HL)	!CLK	0.0100	n/a	n/a	0.1615
D(HL)	CLK	0.0100	n/a	n/a	0.0097
CLK(HL)	!D	0.0100	n/a	n/a	0.2837
CLK(HL)	D	0.0100	n/a	n/a	0.2878

LEAKAGE POWER

When Condition	Power (nW)
!CLK&!D	0.3747
!CLK&D	0.4002
CLK&!D	0.4670
CLK&D	0.4946

gf180mcu_fd_sc_mcu7t5v0__dffq_4

gf180mcu_fd_sc_mcu7t5v0__dffq_4 symbol

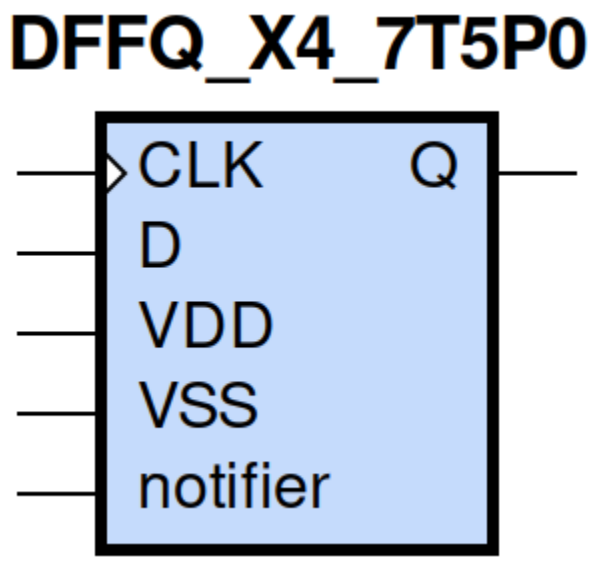

gf180mcu_fd_sc_mcu7t5v0__dffq_4 schematic

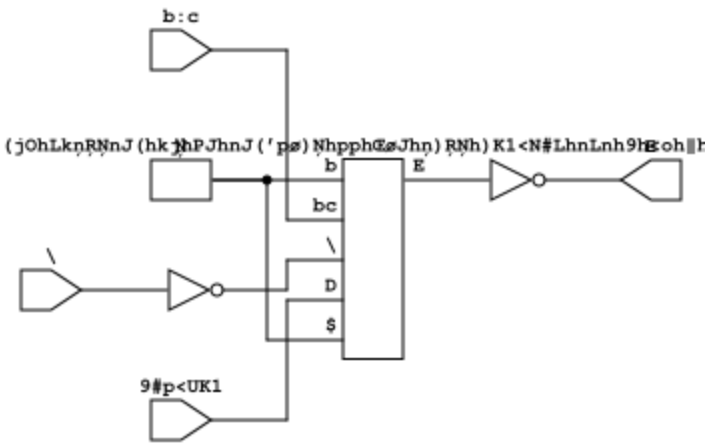

gf180mcu_fd_sc_mcu7t5v0__dffq_4 layout

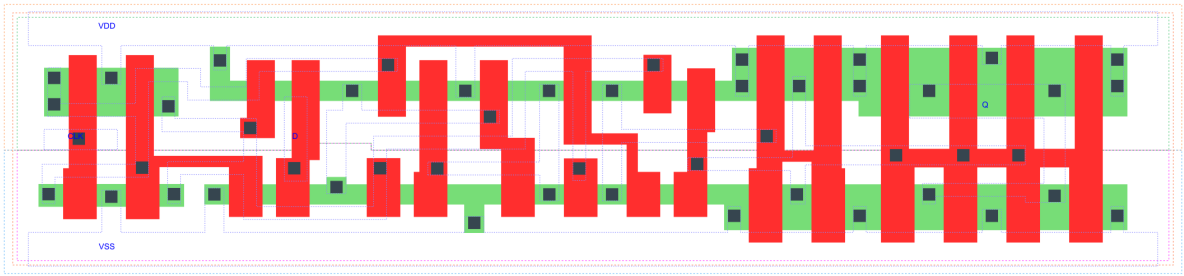

DFFQ_X4 is a poistive edge triggered D-type flip flop, 4X drive strength

Attributes

Attribute	Value
area	79.027200 μm^2

TRUTH TABLE

Input		Output
D	CLK	Q
L	↑	L
H	↑	H

FUNCTIONAL SCHEMATIC

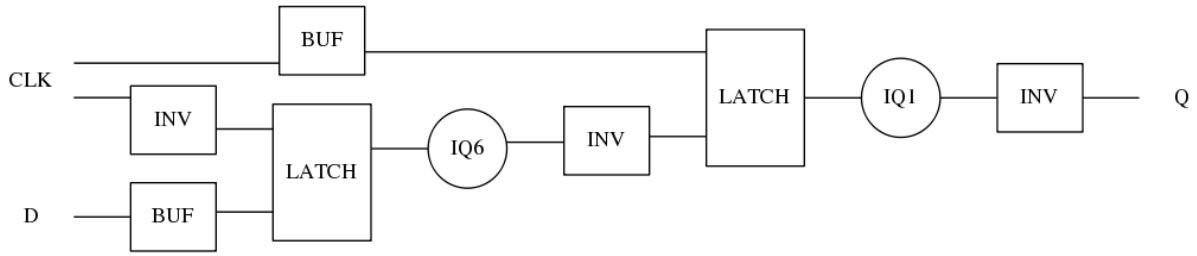

CONSTRAINTS

Constraint Pin	Related Pin	setup(ns)	hold(ns)
D(LH)	CLK(LH)	0.2460	0.0630
D(HL)	CLK(LH)	0.2460	0.1030

Constraint Pin	Related Pin	Minimum Pulse Width(ns)
CLK(LHL)	CLK(LH)	0.3680
CLK(LHL)	CLK(LH)	0.5440
CLK(HLH)	CLK(HL)	0.5650
CLK(HLH)	CLK(HL)	0.3820

PIN CAPACITANCE (pf)

Pin	Type	Capacitance (pf)
CLK	input	0.0034
D	input	0.0024

DELAY AND OUTPUT TRANSITION TIME corresponding to min slew and load

Input Pin	Output	When Condition	Tin (ns)	Out Load (pf)	Delay (ns)	Tout (ns)
CLK(LH)	Q(HL)	!D	0.0100	0.0010	0.7011	0.0343
CLK(LH)	Q(LH)	D	0.0100	0.0010	0.7111	0.0364

DYNAMIC ENERGY

Input Pin	When Condition	Tin (ns)	Output	Out Load (pf)	Energy (uW/MHz)
CLK	!D	0.0100	Q(HL)	0.0010	0.9839
CLK	D	0.0100	Q(LH)	0.0010	1.0675
D(LH)	!CLK	0.0100	n/a	n/a	0.1085
D(LH)	CLK	0.0100	n/a	n/a	-0.0067
CLK(LH)	!D	0.0100	n/a	n/a	0.2147
CLK(LH)	D	0.0100	n/a	n/a	0.2143
D(HL)	!CLK	0.0100	n/a	n/a	0.1614
D(HL)	CLK	0.0100	n/a	n/a	0.0097
CLK(HL)	!D	0.0100	n/a	n/a	0.2871
CLK(HL)	D	0.0100	n/a	n/a	0.2911

LEAKAGE POWER

When Condition	Power (nW)
!CLK&!D	0.4522
!CLK&D	0.4774
CLK&!D	0.5443
CLK&D	0.5720

gf180mcu_fd_sc_mcu7t5v0__dffrnq_1

gf180mcu_fd_sc_mcu7t5v0__dffrnq_1 symbol

DFFRNQ_X1_7T5P0

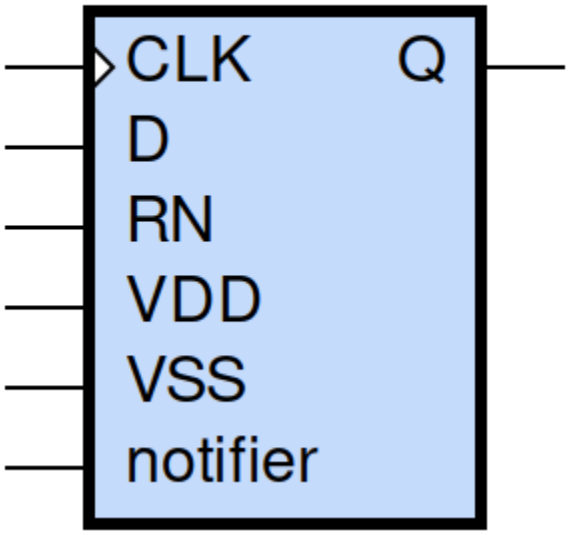

gf180mcu_fd_sc_mcu7t5v0__dffrnq_1 schematic

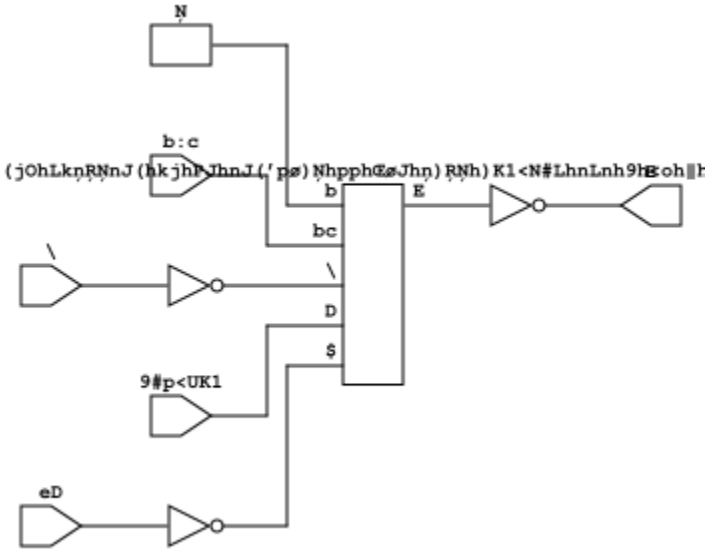

gf180mcu_fd_sc_mcu7t5v0__dffrnq_1 layout

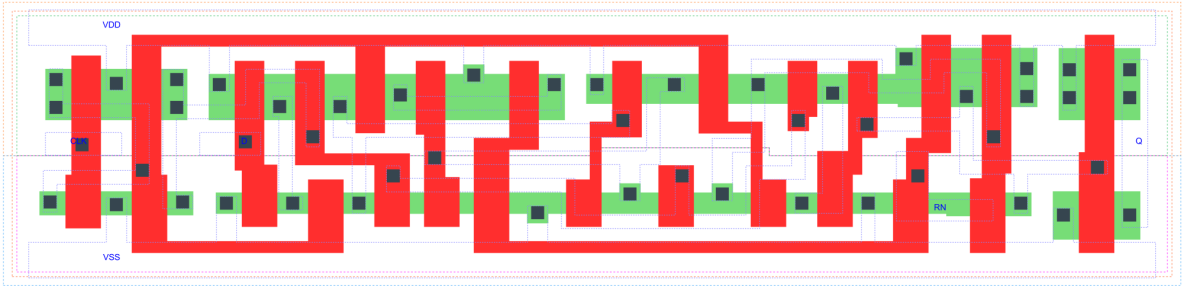

DFFRNQ_X1 is a positive edge triggered D-type flip flop, active low reset, 1X drive strength

Attributes

Attribute	Value
area	74.636800 μm^2

TRUTH TABLE

Input			Output
RN	D	CLK	Q
H	L	↑	L
H	H	↑	H
L	X	X	L

FUNCTIONAL SCHEMATIC

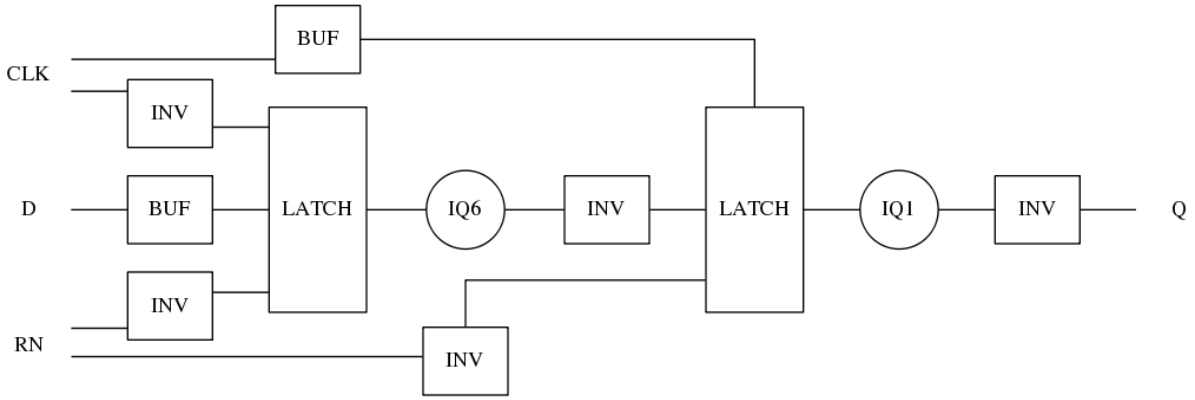

CONSTRAINTS

Constraint Pin	Related Pin	setup(ns)	hold(ns)
D(HL)	CLK(LH)	0.1260	0.1370
D(LH)	CLK(LH)	0.2980	-0.0860

Constraint Pin	Related Pin	recovery(ns)	removal(ns)
RN(LH)	CLK(LH)	-0.2000	0.3150

Constraint Pin	Related Pin	Minimum Pulse Width(ns)
CLK(HLH)	CLK(HL)	0.3570
CLK(HLH)	CLK(HL)	0.4490
CLK(LHL)	CLK(LH)	0.3580
CLK(LHL)	CLK(LH)	0.5730
RN(HLH)	RN(HL)	0.2800
RN(HLH)	RN(HL)	0.2800
RN(HLH)	RN(HL)	0.3490
RN(HLH)	RN(HL)	0.3390

PIN CAPACITANCE (pf)

Pin	Type	Capacitance (pf)
CLK	input	0.0034
D	input	0.0030
RN	input	0.0072

DELAY AND OUTPUT TRANSITION TIME corresponding to min slew and load

Input Pin	Output	When Condition	Tin (ns)	Out Load (pf)	Delay (ns)	Tout (ns)
CLK(LH)	Q(HL)	!D&RN	0.0100	0.0010	0.6362	0.0389
CLK(LH)	Q(LH)	D&RN	0.0100	0.0010	0.8167	0.0579
RN(HL)	Q(HL)	!CLK&!D	0.0100	0.0010	0.1763	0.0376
RN(HL)	Q(HL)	!CLK&D	0.0100	0.0010	0.1763	0.0378
RN(HL)	Q(HL)	CLK&!D	0.0100	0.0010	0.1766	0.0378
RN(HL)	Q(HL)	CLK&D	0.0100	0.0010	0.1765	0.0379

DYNAMIC ENERGY

Input Pin	When Condition	Tin (ns)	Output	Out Load (pf)	Energy (uW/MHz)
CLK	!D&RN	0.0100	Q(HL)	0.0010	0.5868
CLK	D&RN	0.0100	Q(LH)	0.0010	0.6682
RN	!CLK&!D	0.0100	Q(HL)	0.0010	0.3812
RN	!CLK&D	0.0100	Q(HL)	0.0010	0.3986
RN	CLK&!D	0.0100	Q(HL)	0.0010	0.6048
RN	CLK&D	0.0100	Q(HL)	0.0010	0.6047
D(HL)	!CLK&!RN	0.0100	n/a	n/a	0.2483
D(HL)	CLK&!RN	0.0100	n/a	n/a	0.0647
D(HL)	!CLK&RN	0.0100	n/a	n/a	0.2377
D(HL)	CLK&RN	0.0100	n/a	n/a	0.0647
CLK(LH)	!D&!RN	0.0100	n/a	n/a	0.2462
CLK(LH)	D&!RN	0.0100	n/a	n/a	0.4707
CLK(LH)	!D&RN	0.0100	n/a	n/a	0.2463
CLK(LH)	D&RN	0.0100	n/a	n/a	0.2357
CLK(HL)	!D&!RN	0.0100	n/a	n/a	0.2910
CLK(HL)	D&!RN	0.0100	n/a	n/a	0.4421
CLK(HL)	!D&RN	0.0100	n/a	n/a	0.2909
CLK(HL)	D&RN	0.0100	n/a	n/a	0.2862
D(LH)	!CLK&!RN	0.0100	n/a	n/a	0.1556
D(LH)	CLK&!RN	0.0100	n/a	n/a	0.0057
D(LH)	!CLK&RN	0.0100	n/a	n/a	0.1623
D(LH)	CLK&RN	0.0100	n/a	n/a	0.0056
RN(HL)	!CLK&!D	0.0100	n/a	n/a	0.0593
RN(HL)	!CLK&D	0.0100	n/a	n/a	0.0579
RN(HL)	CLK&!D	0.0100	n/a	n/a	0.0607
RN(HL)	CLK&D	0.0100	n/a	n/a	0.0606
RN(LH)	!CLK&!D	0.0100	n/a	n/a	-0.0570
RN(LH)	!CLK&D	0.0100	n/a	n/a	-0.0528
RN(LH)	CLK&!D	0.0100	n/a	n/a	-0.0569
RN(LH)	CLK&D	0.0100	n/a	n/a	-0.0569

LEAKAGE POWER

When Condition	Power (nW)
!CLK&!D&!RN	0.4119
!CLK&D&!RN	0.4142
CLK&!D&!RN	0.4526
CLK&D&!RN	0.4551
!CLK&!D&RN	0.4128
!CLK&D&RN	0.5218
CLK&!D&RN	0.4778
CLK&D&RN	0.6161

gf180mcu_fd_sc_mcu7t5v0__dffrnq_2

gf180mcu_fd_sc_mcu7t5v0__dffrnq_2 symbol

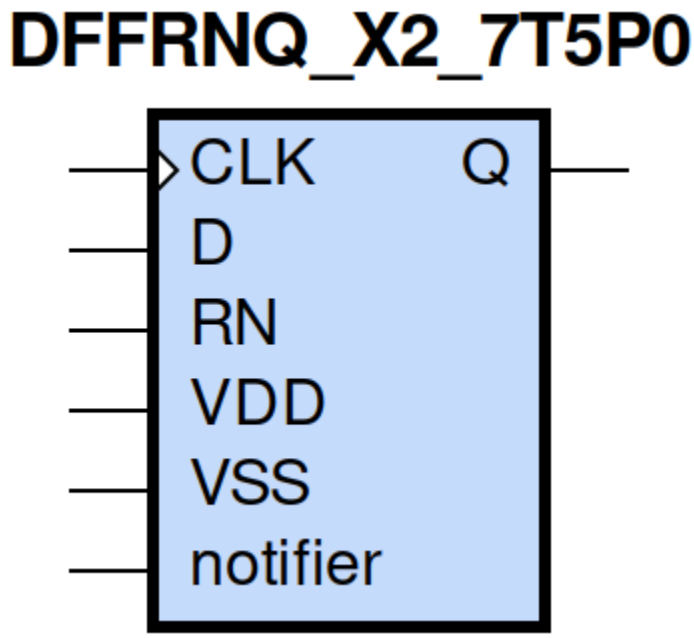

gf180mcu_fd_sc_mcu7t5v0__dffrnq_2 schematic

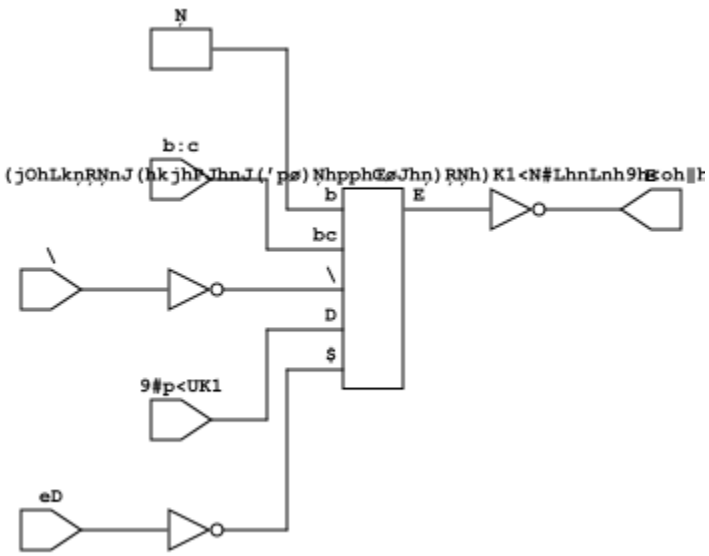

gf180mcu_fd_sc_mcu7t5v0__dffrnq_2 layout

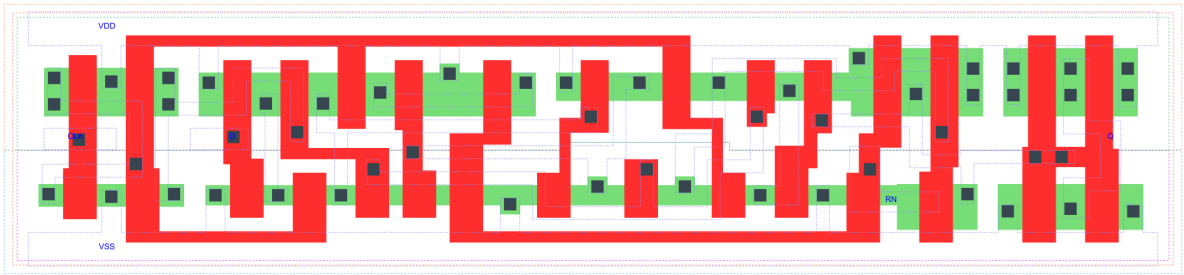

DFFRNQ_X2 is a positive edge triggered D-type flip flop, active low reset, 2X drive strength

Attributes

Attribute	Value
area	79.027200 μm^2

TRUTH TABLE

Input			Output
RN	D	CLK	Q
H	L	↑	L
H	H	↑	H
L	X	X	L

FUNCTIONAL SCHEMATIC

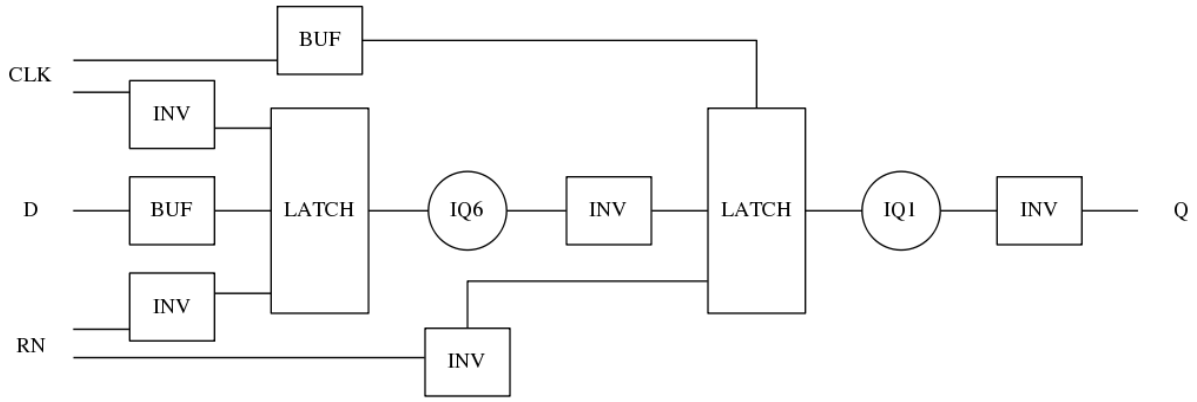

CONSTRAINTS

Constraint Pin	Related Pin	setup(ns)	hold(ns)
D(HL)	CLK(LH)	0.1320	0.1370
D(LH)	CLK(LH)	0.3090	-0.0800

Constraint Pin	Related Pin	recovery(ns)	removal(ns)
RN(LH)	CLK(LH)	-0.1950	0.3090

Constraint Pin	Related Pin	Minimum Pulse Width(ns)
CLK(HLH)	CLK(HL)	0.3630
CLK(HLH)	CLK(HL)	0.4610
CLK(LHL)	CLK(LH)	0.4070
CLK(LHL)	CLK(LH)	0.6030
RN(HLH)	RN(HL)	0.2800
RN(HLH)	RN(HL)	0.2800
RN(HLH)	RN(HL)	0.3490
RN(HLH)	RN(HL)	0.3490

PIN CAPACITANCE (pf)

Pin	Type	Capacitance (pf)
CLK	input	0.0034
D	input	0.0030
RN	input	0.0076

DELAY AND OUTPUT TRANSITION TIME corresponding to min slew and load

Input Pin	Output	When Condition	Tin (ns)	Out Load (pf)	Delay (ns)	Tout (ns)
CLK(LH)	Q(HL)	!D&RN	0.0100	0.0010	0.6719	0.0353
CLK(LH)	Q(LH)	D&RN	0.0100	0.0010	0.8342	0.0511
RN(HL)	Q(HL)	!CLK&!D	0.0100	0.0010	0.1884	0.0351
RN(HL)	Q(HL)	!CLK&D	0.0100	0.0010	0.1884	0.0349
RN(HL)	Q(HL)	CLK&!D	0.0100	0.0010	0.1884	0.0348
RN(HL)	Q(HL)	CLK&D	0.0100	0.0010	0.1884	0.0348

DYNAMIC ENERGY

Input Pin	When Condition	Tin (ns)	Output	Out Load (pf)	Energy (uW/MHz)
CLK	!D&RN	0.0100	Q(HL)	0.0010	0.7402
CLK	D&RN	0.0100	Q(LH)	0.0010	0.8598
RN	!CLK&!D	0.0100	Q(HL)	0.0010	0.5449
RN	!CLK&D	0.0100	Q(HL)	0.0010	0.5620
RN	CLK&!D	0.0100	Q(HL)	0.0010	0.7686
RN	CLK&D	0.0100	Q(HL)	0.0010	0.7686
D(HL)	!CLK&!RN	0.0100	n/a	n/a	0.2483
D(HL)	CLK&!RN	0.0100	n/a	n/a	0.0647

continues on next page

Table 44 – continued from previous page

D(HL)	!CLK&RN	0.0100	n/a	n/a	0.2377
D(HL)	CLK&RN	0.0100	n/a	n/a	0.0647
CLK(LH)	!D&!RN	0.0100	n/a	n/a	0.2462
CLK(LH)	D&!RN	0.0100	n/a	n/a	0.4717
CLK(LH)	!D&RN	0.0100	n/a	n/a	0.2462
CLK(LH)	D&RN	0.0100	n/a	n/a	0.2358
CLK(HL)	!D&!RN	0.0100	n/a	n/a	0.2910
CLK(HL)	D&!RN	0.0100	n/a	n/a	0.4421
CLK(HL)	!D&RN	0.0100	n/a	n/a	0.2909
CLK(HL)	D&RN	0.0100	n/a	n/a	0.2862
D(LH)	!CLK&!RN	0.0100	n/a	n/a	0.1556
D(LH)	CLK&!RN	0.0100	n/a	n/a	0.0057
D(LH)	!CLK&RN	0.0100	n/a	n/a	0.1622
D(LH)	CLK&RN	0.0100	n/a	n/a	0.0057
RN(HL)	!CLK&!D	0.0100	n/a	n/a	0.0663
RN(HL)	!CLK&D	0.0100	n/a	n/a	0.0648
RN(HL)	CLK&!D	0.0100	n/a	n/a	0.0676
RN(HL)	CLK&D	0.0100	n/a	n/a	0.0675
RN(LH)	!CLK&!D	0.0100	n/a	n/a	-0.0640
RN(LH)	!CLK&D	0.0100	n/a	n/a	-0.0599
RN(LH)	CLK&!D	0.0100	n/a	n/a	-0.0640
RN(LH)	CLK&D	0.0100	n/a	n/a	-0.0640

LEAKAGE POWER

When Condition	Power (nW)
!CLK&!D&!RN	0.4382
!CLK&D&!RN	0.4405
CLK&!D&!RN	0.4789
CLK&D&!RN	0.4814
!CLK&!D&RN	0.4383
!CLK&D&RN	0.5473
CLK&!D&RN	0.5033
CLK&D&RN	0.6418

gf180mcu_fd_sc_mcu7t5v0__dffrnq_4

gf180mcu_fd_sc_mcu7t5v0__dffrnq_4 symbol

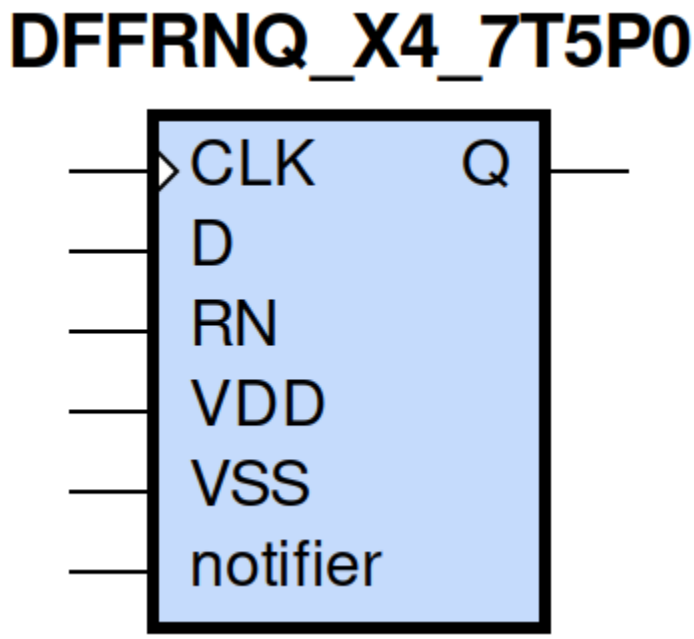

gf180mcu_fd_sc_mcu7t5v0__dffrnq_4 schematic

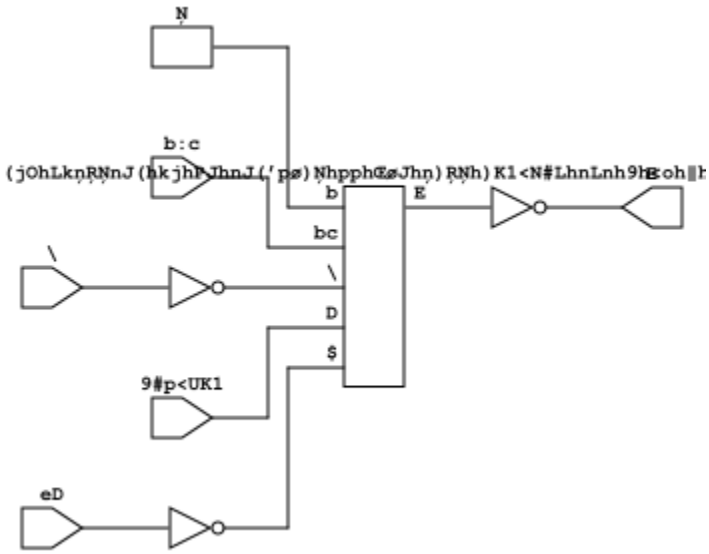

gf180mcu_fd_sc_mcu7t5v0__dffrnq_4 layout

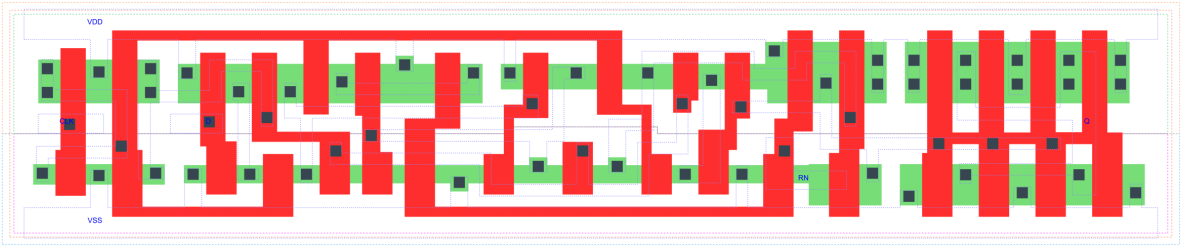

DFFRNQ_X4 is a positive edge triggered D-type flip flop, active low reset, 4X drive strength

Attributes

Attribute	Value
area	87.808000 μm^2

TRUTH TABLE

Input			Output
RN	D	CLK	Q
H	L	↑	L
H	H	↑	H
L	X	X	L

FUNCTIONAL SCHEMATIC

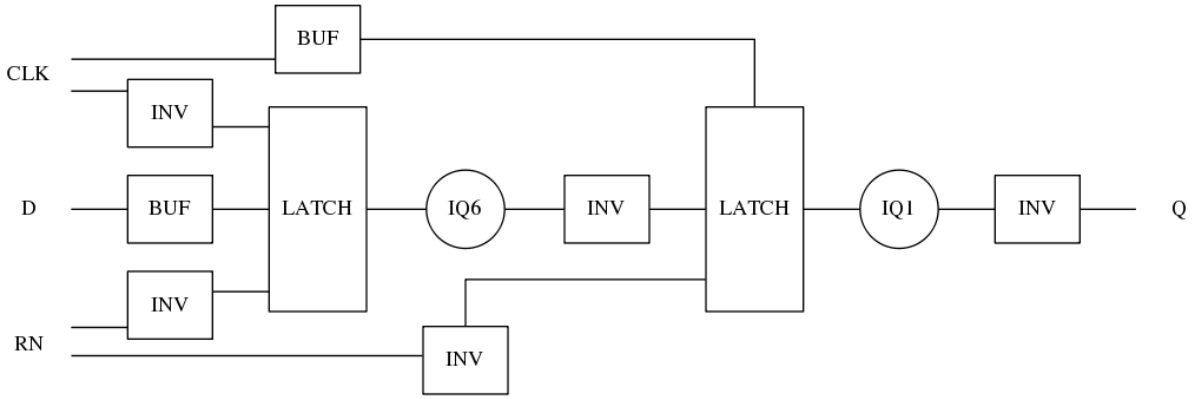

CONSTRAINTS

Constraint Pin	Related Pin	setup(ns)	hold(ns)
D(HL)	CLK(LH)	0.1260	0.1370
D(LH)	CLK(LH)	0.3090	-0.0860

Constraint Pin	Related Pin	recovery(ns)	removal(ns)
RN(LH)	CLK(LH)	-0.1890	0.3150

Constraint Pin	Related Pin	Minimum Pulse Width(ns)
CLK(HLH)	CLK(HL)	0.3630
CLK(HLH)	CLK(HL)	0.4610
CLK(LHL)	CLK(LH)	0.4660
CLK(LHL)	CLK(LH)	0.6910
RN(HLH)	RN(HL)	0.3190
RN(HLH)	RN(HL)	0.3190
RN(HLH)	RN(HL)	0.3490
RN(HLH)	RN(HL)	0.3490

PIN CAPACITANCE (pf)

Pin	Type	Capacitance (pf)
CLK	input	0.0034
D	input	0.0030
RN	input	0.0076

DELAY AND OUTPUT TRANSITION TIME corresponding to min slew and load

Input Pin	Output	When Condition	Tin (ns)	Out Load (pf)	Delay (ns)	Tout (ns)
CLK(LH)	Q(HL)	!D&RN	0.0100	0.0010	0.7446	0.0455
CLK(LH)	Q(LH)	D&RN	0.0100	0.0010	0.9713	0.0653
RN(HL)	Q(HL)	!CLK&!D	0.0100	0.0010	0.2560	0.0461
RN(HL)	Q(HL)	!CLK&D	0.0100	0.0010	0.2560	0.0462
RN(HL)	Q(HL)	CLK&!D	0.0100	0.0010	0.2559	0.0459
RN(HL)	Q(HL)	CLK&D	0.0100	0.0010	0.2558	0.0461

DYNAMIC ENERGY

Input Pin	When Condition	Tin (ns)	Output	Out Load (pf)	Energy (uW/MHz)
CLK	!D&RN	0.0100	Q(HL)	0.0010	1.0951
CLK	D&RN	0.0100	Q(LH)	0.0010	1.3423
RN	!CLK&!D	0.0100	Q(HL)	0.0010	0.9000
RN	!CLK&D	0.0100	Q(HL)	0.0010	0.9172
RN	CLK&!D	0.0100	Q(HL)	0.0010	1.1307
RN	CLK&D	0.0100	Q(HL)	0.0010	1.1307
D(HL)	!CLK&!RN	0.0100	n/a	n/a	0.2483
D(HL)	CLK&!RN	0.0100	n/a	n/a	0.0647
D(HL)	!CLK&RN	0.0100	n/a	n/a	0.2377
D(HL)	CLK&RN	0.0100	n/a	n/a	0.0647
CLK(LH)	!D&!RN	0.0100	n/a	n/a	0.2462
CLK(LH)	D&!RN	0.0100	n/a	n/a	0.4716
CLK(LH)	!D&RN	0.0100	n/a	n/a	0.2462
CLK(LH)	D&RN	0.0100	n/a	n/a	0.2358
CLK(HL)	!D&!RN	0.0100	n/a	n/a	0.2909
CLK(HL)	D&!RN	0.0100	n/a	n/a	0.4421
CLK(HL)	!D&RN	0.0100	n/a	n/a	0.2909
CLK(HL)	D&RN	0.0100	n/a	n/a	0.2861
D(LH)	!CLK&!RN	0.0100	n/a	n/a	0.1556
D(LH)	CLK&!RN	0.0100	n/a	n/a	0.0057
D(LH)	!CLK&RN	0.0100	n/a	n/a	0.1622
D(LH)	CLK&RN	0.0100	n/a	n/a	0.0057
RN(HL)	!CLK&!D	0.0100	n/a	n/a	0.0663
RN(HL)	!CLK&D	0.0100	n/a	n/a	0.0648
RN(HL)	CLK&!D	0.0100	n/a	n/a	0.0676
RN(HL)	CLK&D	0.0100	n/a	n/a	0.0675
RN(LH)	!CLK&!D	0.0100	n/a	n/a	-0.0640
RN(LH)	!CLK&D	0.0100	n/a	n/a	-0.0600
RN(LH)	CLK&!D	0.0100	n/a	n/a	-0.0641
RN(LH)	CLK&D	0.0100	n/a	n/a	-0.0641

LEAKAGE POWER

When Condition	Power (nW)
!CLK&!D&!RN	0.4911
!CLK&D&!RN	0.4935
CLK&!D&!RN	0.5319
CLK&D&!RN	0.5343
!CLK&!D&RN	0.4913
!CLK&D&RN	0.6003
CLK&!D&RN	0.5563
CLK&D&RN	0.6927

gf180mcu_fd_sc_mcu7t5v0__dffrsnq_1

gf180mcu_fd_sc_mcu7t5v0__dffrsnq_1 symbol

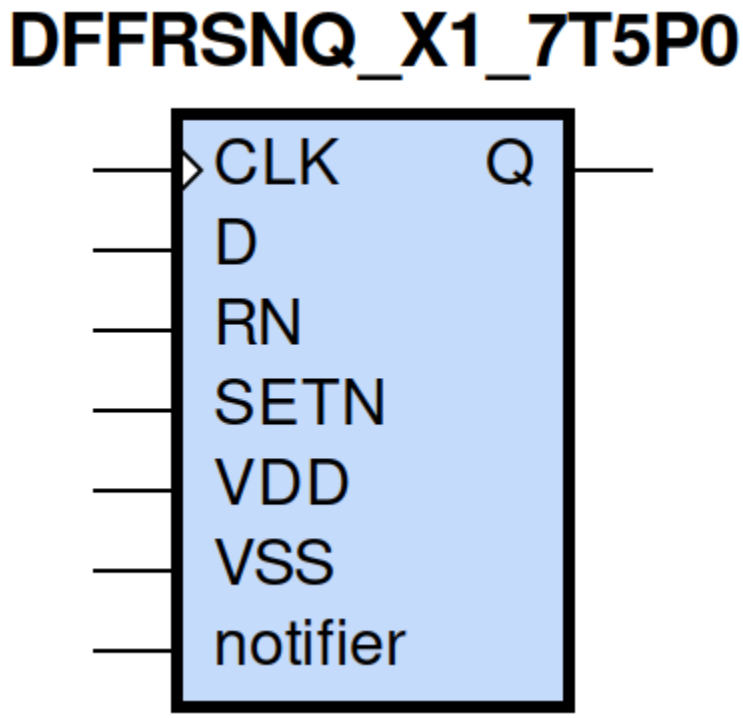

gf180mcu_fd_sc_mcu7t5v0__dffrsnq_1 schematic

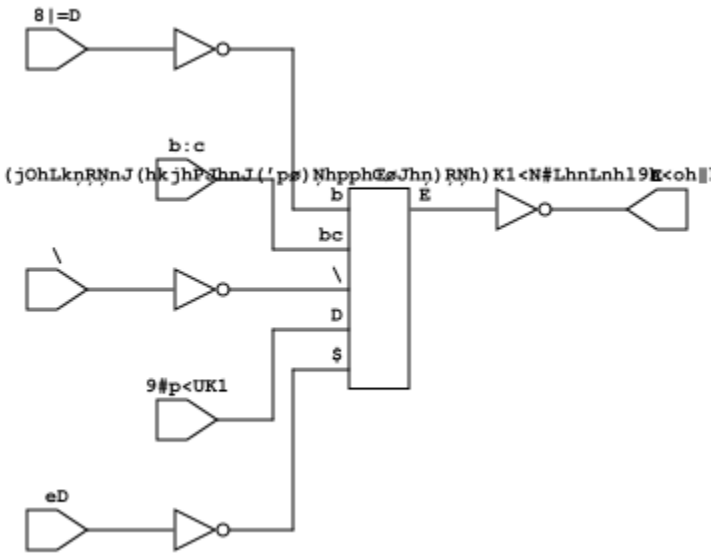

gf180mcu_fd_sc_mcu7t5v0__dffrsnq_1 layout

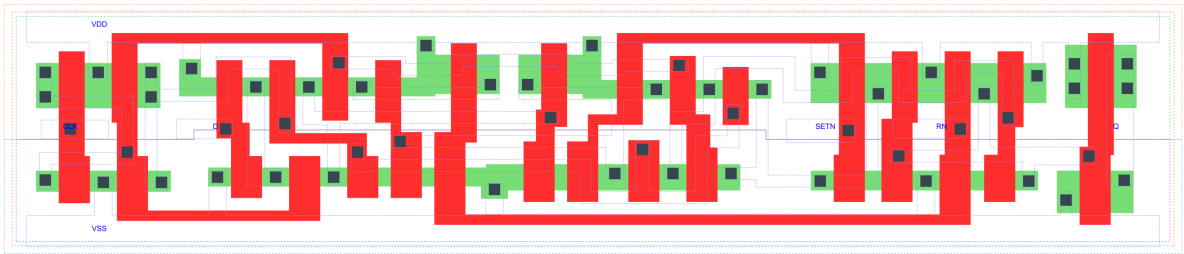

DFFRSNQ_X1 is a positive edge triggered D-type flip flop, active low set/reset, 1X drive strength

Attributes

Attribute	Value
area	85.612800 μm^2

TRUTH TABLE

Input				Output
RN	SETN	D	CLK	Q
H	H	L	↑	L
H	H	H	↑	H
L	H	X	X	L
H	L	X	X	H
L	L	X	X	L

FUNCTIONAL SCHEMATIC

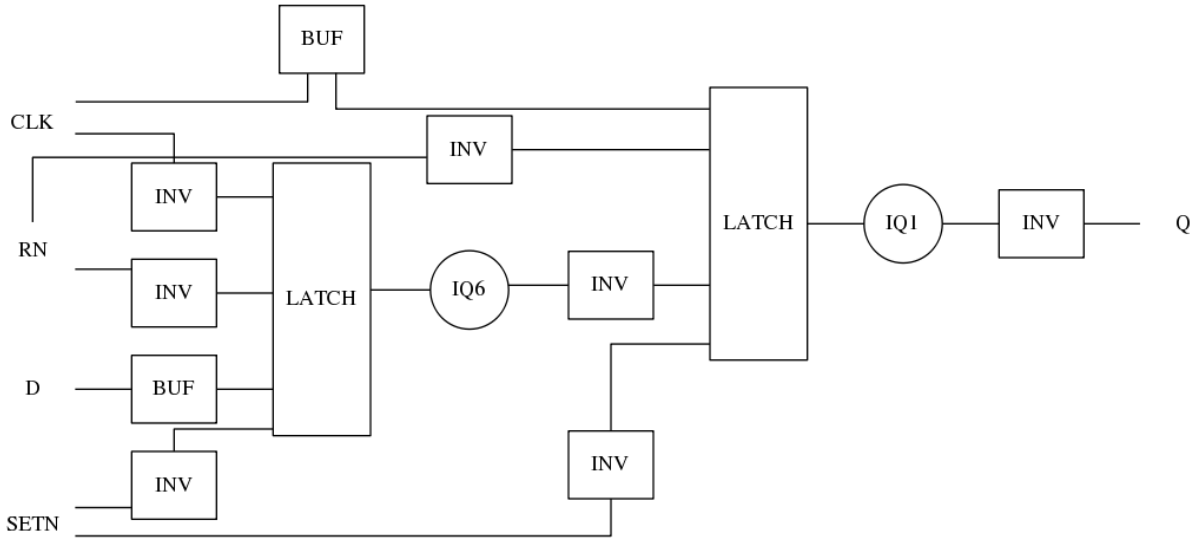

CONSTRAINTS

Constraint Pin	Related Pin	setup(ns)	hold(ns)
D(HL)	CLK(LH)	0.2920	0.0340
D(LH)	CLK(LH)	0.1600	-0.0170
SETN(LH)	RN(LH)	0.0110	0.0690
SETN(LH)	RN(LH)	-0.0630	0.1140
SETN(LH)	RN(LH)	0.0110	0.0690
SETN(LH)	RN(LH)	-0.0630	0.1140
RN(LH)	SETN(LH)	0.0690	0.0110
RN(LH)	SETN(LH)	0.1140	-0.0630
RN(LH)	SETN(LH)	0.0690	0.0110
RN(LH)	SETN(LH)	0.1140	-0.0630

Constraint Pin	Related Pin	recovery(ns)	removal(ns)
SETN(LH)	CLK(LH)	-0.0860	0.3320
RN(LH)	CLK(LH)	-0.3430	0.5270

Constraint Pin	Related Pin	Minimum Pulse Width(ns)
CLK(HLH)	CLK(HL)	0.4920
CLK(HLH)	CLK(HL)	0.3270
CLK(LHL)	CLK(LH)	0.4370
CLK(LHL)	CLK(LH)	0.5640
SETN(HLH)	SETN(HL)	0.3980
SETN(HLH)	SETN(HL)	0.6420
SETN(HLH)	SETN(HL)	0.3980
SETN(HLH)	SETN(HL)	0.6420
RN(HLH)	RN(HL)	0.3680
RN(HLH)	RN(HL)	0.5050
RN(HLH)	RN(HL)	0.3680
RN(HLH)	RN(HL)	0.5050

PIN CAPACITANCE (pf)

Pin	Type	Capacitance (pf)
CLK	input	0.0034
D	input	0.0023
SETN	input	0.0063
RN	input	0.0074

DELAY AND OUTPUT TRANSITION TIME corresponding to min slew and load

Input Pin	Output	When Condition	Tin (ns)	Out Load (pf)	Delay (ns)	Tout (ns)
CLK(LH)	Q(HL)	!D&RN&SETN	0.0100	0.0010	0.6858	0.0446
CLK(LH)	Q(LH)	D&RN&SETN	0.0100	0.0010	0.8109	0.0568
SETN(HL)	Q(LH)	!CLK&!D&RN	0.0100	0.0010	0.5886	0.0563
SETN(HL)	Q(LH)	CLK&!D&RN	0.0100	0.0010	0.8742	0.0577
SETN(HL)	Q(LH)	!CLK&D&RN	0.0100	0.0010	0.5887	0.0561
SETN(HL)	Q(LH)	CLK&D&RN	0.0100	0.0010	0.8744	0.0574
RN(HL)	Q(HL)	!CLK&!D&SETN	0.0100	0.0010	0.2092	0.0432
RN(HL)	Q(HL)	CLK&!D&SETN	0.0100	0.0010	0.2094	0.0431
RN(HL)	Q(HL)	!CLK&D&SETN	0.0100	0.0010	0.2093	0.0432
RN(HL)	Q(HL)	CLK&D&SETN	0.0100	0.0010	0.2094	0.0431
RN(HL)	Q(HL)	!CLK&!D&!SETN	0.0100	0.0010	0.2088	0.0426
RN(HL)	Q(HL)	!CLK&D&!SETN	0.0100	0.0010	0.2088	0.0426
RN(HL)	Q(HL)	CLK&!D&!SETN	0.0100	0.0010	0.2090	0.0427
RN(HL)	Q(HL)	CLK&D&!SETN	0.0100	0.0010	0.2090	0.0427
RN(LH)	Q(LH)	!CLK&!D&!SETN	0.0100	0.0010	0.2982	0.0540
RN(LH)	Q(LH)	!CLK&D&!SETN	0.0100	0.0010	0.2982	0.0540
RN(LH)	Q(LH)	CLK&!D&!SETN	0.0100	0.0010	0.3008	0.0542
RN(LH)	Q(LH)	CLK&D&!SETN	0.0100	0.0010	0.3010	0.0541

DYNAMIC ENERGY

Input Pin	When Condition	Tin (ns)	Output	Out Load (pf)	Energy (uW/MHz)
CLK	!D&RN&SETN	0.0100	Q(HL)	0.0010	0.5893
CLK	D&RN&SETN	0.0100	Q(LH)	0.0010	0.7112
SETN	!CLK&!D&RN	0.0100	Q(LH)	0.0010	0.5733
SETN	CLK&!D&RN	0.0100	Q(LH)	0.0010	0.6912
SETN	!CLK&D&RN	0.0100	Q(LH)	0.0010	0.4523
SETN	CLK&D&RN	0.0100	Q(LH)	0.0010	0.6913
RN	!CLK&!D&SETN	0.0100	Q(HL)	0.0010	0.3788
RN	CLK&!D&SETN	0.0100	Q(HL)	0.0010	0.6075
RN	!CLK&D&SETN	0.0100	Q(HL)	0.0010	0.3788
RN	CLK&D&SETN	0.0100	Q(HL)	0.0010	0.6067
RN	!CLK&!D&!SETN	0.0100	Q(HL)	0.0010	0.2655
RN	!CLK&D&!SETN	0.0100	Q(HL)	0.0010	0.2637
RN	CLK&!D&!SETN	0.0100	Q(HL)	0.0010	0.4117
RN	CLK&D&!SETN	0.0100	Q(HL)	0.0010	0.4117
RN	!CLK&!D&!SETN	0.0100	Q(LH)	0.0010	0.1495
RN	!CLK&D&!SETN	0.0100	Q(LH)	0.0010	0.1510
RN	CLK&!D&!SETN	0.0100	Q(LH)	0.0010	0.2358
RN	CLK&D&!SETN	0.0100	Q(LH)	0.0010	0.2361
SETN(HL)	!CLK&!D&!RN	0.0100	n/a	n/a	0.3510
SETN(HL)	!CLK&D&!RN	0.0100	n/a	n/a	0.2364
SETN(HL)	CLK&!D&!RN	0.0100	n/a	n/a	0.3511
SETN(HL)	CLK&D&!RN	0.0100	n/a	n/a	0.3511
SETN(HL)	!CLK&!D&RN	0.0100	n/a	n/a	0.1625
SETN(HL)	CLK&!D&RN	0.0100	n/a	n/a	0.0418

continues on next page

Table 46 – continued from previous page

SETN(HL)	!CLK&D&RN	0.0100	n/a	n/a	0.0418
SETN(HL)	CLK&D&RN	0.0100	n/a	n/a	0.0418
D(HL)	!CLK&!RN&!SETN	0.0100	n/a	n/a	0.1589
D(HL)	!CLK&!RN&SETN	0.0100	n/a	n/a	0.2485
D(HL)	CLK&!RN&!SETN	0.0100	n/a	n/a	0.0521
D(HL)	CLK&!RN&SETN	0.0100	n/a	n/a	0.0521
D(HL)	!CLK&RN&!SETN	0.0100	n/a	n/a	0.1588
D(HL)	CLK&RN&!SETN	0.0100	n/a	n/a	0.0521
D(HL)	!CLK&RN&SETN	0.0100	n/a	n/a	0.2385
D(HL)	CLK&RN&SETN	0.0100	n/a	n/a	0.0521
CLK(LH)	!D&!RN&!SETN	0.0100	n/a	n/a	0.2501
CLK(LH)	!D&!RN&SETN	0.0100	n/a	n/a	0.2473
CLK(LH)	D&!RN&!SETN	0.0100	n/a	n/a	0.3552
CLK(LH)	D&!RN&SETN	0.0100	n/a	n/a	0.5177
CLK(LH)	!D&RN&!SETN	0.0100	n/a	n/a	0.3048
CLK(LH)	D&RN&!SETN	0.0100	n/a	n/a	0.2557
CLK(LH)	!D&RN&SETN	0.0100	n/a	n/a	0.2472
CLK(LH)	D&RN&SETN	0.0100	n/a	n/a	0.2557
CLK(HL)	!D&!RN&!SETN	0.0100	n/a	n/a	0.3080
CLK(HL)	!D&!RN&SETN	0.0100	n/a	n/a	0.3115
CLK(HL)	D&!RN&!SETN	0.0100	n/a	n/a	0.3571
CLK(HL)	D&!RN&SETN	0.0100	n/a	n/a	0.5176
CLK(HL)	!D&RN&!SETN	0.0100	n/a	n/a	0.4594
CLK(HL)	D&RN&!SETN	0.0100	n/a	n/a	0.3097
CLK(HL)	!D&RN&SETN	0.0100	n/a	n/a	0.3115
CLK(HL)	D&RN&SETN	0.0100	n/a	n/a	0.3097
D(LH)	!CLK&!RN&!SETN	0.0100	n/a	n/a	0.0529
D(LH)	!CLK&!RN&SETN	0.0100	n/a	n/a	0.1995
D(LH)	CLK&!RN&!SETN	0.0100	n/a	n/a	0.0044
D(LH)	CLK&!RN&SETN	0.0100	n/a	n/a	0.0044
D(LH)	!CLK&RN&!SETN	0.0100	n/a	n/a	0.0529
D(LH)	CLK&RN&!SETN	0.0100	n/a	n/a	0.0044
D(LH)	!CLK&RN&SETN	0.0100	n/a	n/a	0.2059
D(LH)	CLK&RN&SETN	0.0100	n/a	n/a	0.0044
RN(HL)	!CLK&!D&SETN	0.0100	n/a	n/a	0.0510
RN(HL)	CLK&!D&SETN	0.0100	n/a	n/a	0.0524
RN(HL)	!CLK&D&SETN	0.0100	n/a	n/a	0.0493
RN(HL)	CLK&D&SETN	0.0100	n/a	n/a	0.0523
RN(LH)	!CLK&!D&SETN	0.0100	n/a	n/a	-0.0487
RN(LH)	!CLK&D&SETN	0.0100	n/a	n/a	-0.0444
RN(LH)	CLK&!D&SETN	0.0100	n/a	n/a	-0.0487
RN(LH)	CLK&D&SETN	0.0100	n/a	n/a	-0.0487
SETN(LH)	!CLK&!D&!RN	0.0100	n/a	n/a	0.1133
SETN(LH)	!CLK&D&!RN	0.0100	n/a	n/a	0.0649
SETN(LH)	CLK&!D&!RN	0.0100	n/a	n/a	0.1070
SETN(LH)	CLK&D&!RN	0.0100	n/a	n/a	0.1070
SETN(LH)	!CLK&!D&RN	0.0100	n/a	n/a	0.0155
SETN(LH)	!CLK&D&RN	0.0100	n/a	n/a	-0.0248
SETN(LH)	CLK&!D&RN	0.0100	n/a	n/a	-0.0248
SETN(LH)	CLK&D&RN	0.0100	n/a	n/a	-0.0248

LEAKAGE POWER

When Condition	Power (nW)
!CLK&!D&!RN&!SETN	0.4517
!CLK&!D&!RN&SETN	0.4639
!CLK&D&!RN&!SETN	0.4501
!CLK&D&!RN&SETN	0.4762
CLK&!D&!RN&!SETN	0.5333
CLK&!D&!RN&SETN	0.5046
CLK&D&!RN&!SETN	0.5353
CLK&D&!RN&SETN	0.5065
CLK&D&RN&SETN	0.7016
!CLK&!D&RN&!SETN	0.4362
!CLK&D&RN&!SETN	0.4330
CLK&!D&RN&!SETN	0.4930
CLK&D&RN&!SETN	0.4902
!CLK&!D&RN&SETN	0.6108
!CLK&D&RN&SETN	0.6014
CLK&!D&RN&SETN	0.5302

gf180mcu_fd_sc_mcu7t5v0__dffrsnq_2

gf180mcu_fd_sc_mcu7t5v0__dffrsnq_2 symbol

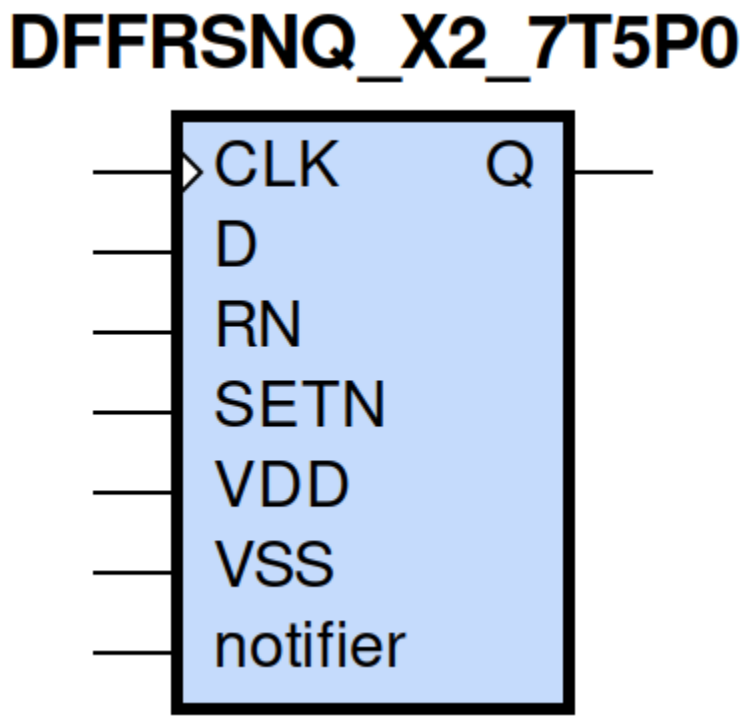

gf180mcu_fd_sc_mcu7t5v0__dffrsnq_2 schematic

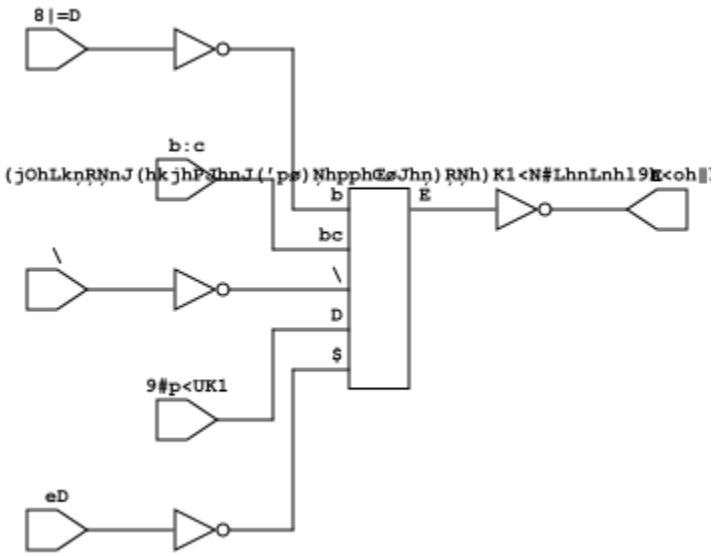

gf180mcu_fd_sc_mcu7t5v0__dffrsnq_2 layout

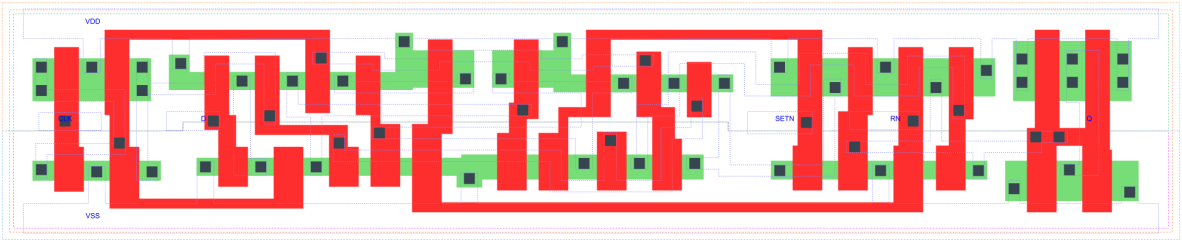

DFFRSNQ_X2 is a positive edge triggered D-type flip flop, active low set/reset, 2X drive strength

Attributes

Attribute	Value
area	90.003200 μm^2

TRUTH TABLE

Input				Output
RN	SETN	D	CLK	Q
H	H	L	↑	L
H	H	H	↑	H
L	H	X	X	L
H	L	X	X	H
L	L	X	X	L

FUNCTIONAL SCHEMATIC

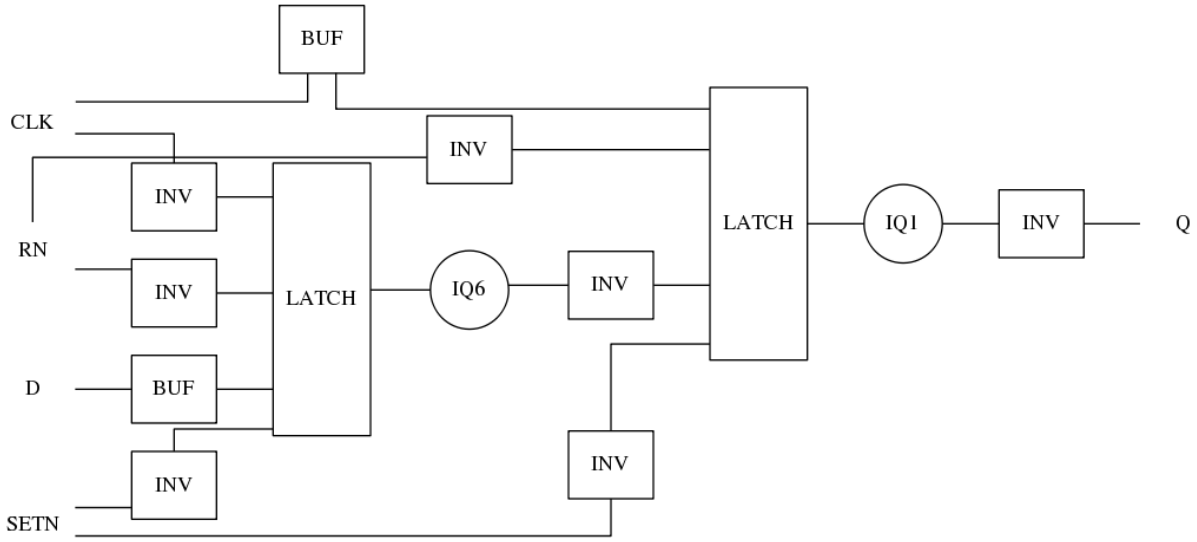

CONSTRAINTS

Constraint Pin	Related Pin	setup(ns)	hold(ns)
D(HL)	CLK(LH)	0.2980	0.0400
D(LH)	CLK(LH)	0.1660	-0.0170
SETN(LH)	RN(LH)	-0.0400	0.1370
SETN(LH)	RN(LH)	-0.0630	0.1490
SETN(LH)	RN(LH)	-0.0400	0.1370
SETN(LH)	RN(LH)	-0.0630	0.1490
RN(LH)	SETN(LH)	0.1370	-0.0400
RN(LH)	SETN(LH)	0.1490	-0.0630
RN(LH)	SETN(LH)	0.1370	-0.0400
RN(LH)	SETN(LH)	0.1490	-0.0630

Constraint Pin	Related Pin	recovery(ns)	removal(ns)
SETN(LH)	CLK(LH)	-0.0860	0.3320
RN(LH)	CLK(LH)	-0.3320	0.5270

Constraint Pin	Related Pin	Minimum Pulse Width(ns)
CLK(HLH)	CLK(HL)	0.4920
CLK(HLH)	CLK(HL)	0.3270
CLK(LHL)	CLK(LH)	0.4950
CLK(LHL)	CLK(LH)	0.6220
SETN(HLH)	SETN(HL)	0.4560
SETN(HLH)	SETN(HL)	0.6610
SETN(HLH)	SETN(HL)	0.4560
SETN(HLH)	SETN(HL)	0.6610
RN(HLH)	RN(HL)	0.3580
RN(HLH)	RN(HL)	0.5050
RN(HLH)	RN(HL)	0.3580
RN(HLH)	RN(HL)	0.5050

PIN CAPACITANCE (pf)

Pin	Type	Capacitance (pf)
CLK	input	0.0034
D	input	0.0023
SETN	input	0.0063
RN	input	0.0074

DELAY AND OUTPUT TRANSITION TIME corresponding to min slew and load

Input Pin	Output	When Condition	Tin (ns)	Out Load (pf)	Delay (ns)	Tout (ns)
CLK(LH)	Q(HL)	!D&RN&SETN	0.0100	0.0010	0.7282	0.0456
CLK(LH)	Q(LH)	D&RN&SETN	0.0100	0.0010	0.8823	0.0555
SETN(HL)	Q(LH)	!CLK&!D&RN	0.0100	0.0010	0.6599	0.0549
SETN(HL)	Q(LH)	CLK&!D&RN	0.0100	0.0010	0.9459	0.0559
SETN(HL)	Q(LH)	!CLK&D&RN	0.0100	0.0010	0.6602	0.0549
SETN(HL)	Q(LH)	CLK&D&RN	0.0100	0.0010	0.9461	0.0556
RN(HL)	Q(HL)	!CLK&!D&SETN	0.0100	0.0010	0.2462	0.0445
RN(HL)	Q(HL)	CLK&!D&SETN	0.0100	0.0010	0.2463	0.0444
RN(HL)	Q(HL)	!CLK&D&SETN	0.0100	0.0010	0.2462	0.0446
RN(HL)	Q(HL)	CLK&D&SETN	0.0100	0.0010	0.2462	0.0444
RN(HL)	Q(HL)	!CLK&!D&!SETN	0.0100	0.0010	0.2456	0.0439
RN(HL)	Q(HL)	!CLK&D&!SETN	0.0100	0.0010	0.2456	0.0439
RN(HL)	Q(HL)	CLK&!D&!SETN	0.0100	0.0010	0.2457	0.0438
RN(HL)	Q(HL)	CLK&D&!SETN	0.0100	0.0010	0.2457	0.0438
RN(LH)	Q(LH)	!CLK&!D&!SETN	0.0100	0.0010	0.3622	0.0530
RN(LH)	Q(LH)	!CLK&D&!SETN	0.0100	0.0010	0.3622	0.0530
RN(LH)	Q(LH)	CLK&!D&!SETN	0.0100	0.0010	0.3664	0.0531
RN(LH)	Q(LH)	CLK&D&!SETN	0.0100	0.0010	0.3664	0.0529

DYNAMIC ENERGY

Input Pin	When Condition	Tin (ns)	Output	Out Load (pf)	Energy (uW/MHz)
CLK	!D&RN&SETN	0.0100	Q(HL)	0.0010	0.7526
CLK	D&RN&SETN	0.0100	Q(LH)	0.0010	0.8968
SETN	!CLK&!D&RN	0.0100	Q(LH)	0.0010	0.7444
SETN	CLK&!D&RN	0.0100	Q(LH)	0.0010	0.8646
SETN	!CLK&D&RN	0.0100	Q(LH)	0.0010	0.6233
SETN	CLK&D&RN	0.0100	Q(LH)	0.0010	0.8647
RN	!CLK&!D&SETN	0.0100	Q(HL)	0.0010	0.5371
RN	CLK&!D&SETN	0.0100	Q(HL)	0.0010	0.7694
RN	!CLK&D&SETN	0.0100	Q(HL)	0.0010	0.5372
RN	CLK&D&SETN	0.0100	Q(HL)	0.0010	0.7686
RN	!CLK&!D&!SETN	0.0100	Q(HL)	0.0010	0.4159
RN	!CLK&D&!SETN	0.0100	Q(HL)	0.0010	0.4141
RN	CLK&!D&!SETN	0.0100	Q(HL)	0.0010	0.5618
RN	CLK&D&!SETN	0.0100	Q(HL)	0.0010	0.5618
RN	!CLK&!D&!SETN	0.0100	Q(LH)	0.0010	0.3132
RN	!CLK&D&!SETN	0.0100	Q(LH)	0.0010	0.3147
RN	CLK&!D&!SETN	0.0100	Q(LH)	0.0010	0.4013
RN	CLK&D&!SETN	0.0100	Q(LH)	0.0010	0.4012
SETN(HL)	!CLK&!D&!RN	0.0100	n/a	n/a	0.3509
SETN(HL)	!CLK&D&!RN	0.0100	n/a	n/a	0.2362
SETN(HL)	CLK&!D&!RN	0.0100	n/a	n/a	0.3510
SETN(HL)	CLK&D&!RN	0.0100	n/a	n/a	0.3510
SETN(HL)	!CLK&!D&RN	0.0100	n/a	n/a	0.1625
SETN(HL)	CLK&!D&RN	0.0100	n/a	n/a	0.0418

continues on next page

Table 47 – continued from previous page

SETN(HL)	!CLK&D&RN	0.0100	n/a	n/a	0.0418
SETN(HL)	CLK&D&RN	0.0100	n/a	n/a	0.0418
D(HL)	!CLK&!RN&!SETN	0.0100	n/a	n/a	0.1589
D(HL)	!CLK&!RN&SETN	0.0100	n/a	n/a	0.2485
D(HL)	CLK&!RN&!SETN	0.0100	n/a	n/a	0.0521
D(HL)	CLK&!RN&SETN	0.0100	n/a	n/a	0.0521
D(HL)	!CLK&RN&!SETN	0.0100	n/a	n/a	0.1588
D(HL)	CLK&RN&!SETN	0.0100	n/a	n/a	0.0521
D(HL)	!CLK&RN&SETN	0.0100	n/a	n/a	0.2385
D(HL)	CLK&RN&SETN	0.0100	n/a	n/a	0.0521
CLK(LH)	!D&!RN&!SETN	0.0100	n/a	n/a	0.2501
CLK(LH)	!D&!RN&SETN	0.0100	n/a	n/a	0.2473
CLK(LH)	D&!RN&!SETN	0.0100	n/a	n/a	0.3551
CLK(LH)	D&!RN&SETN	0.0100	n/a	n/a	0.5177
CLK(LH)	!D&RN&!SETN	0.0100	n/a	n/a	0.3048
CLK(LH)	D&RN&!SETN	0.0100	n/a	n/a	0.2557
CLK(LH)	!D&RN&SETN	0.0100	n/a	n/a	0.2473
CLK(LH)	D&RN&SETN	0.0100	n/a	n/a	0.2557
CLK(HL)	!D&!RN&!SETN	0.0100	n/a	n/a	0.3077
CLK(HL)	!D&!RN&SETN	0.0100	n/a	n/a	0.3112
CLK(HL)	D&!RN&!SETN	0.0100	n/a	n/a	0.3569
CLK(HL)	D&!RN&SETN	0.0100	n/a	n/a	0.5174
CLK(HL)	!D&RN&!SETN	0.0100	n/a	n/a	0.4592
CLK(HL)	D&RN&!SETN	0.0100	n/a	n/a	0.3094
CLK(HL)	!D&RN&SETN	0.0100	n/a	n/a	0.3113
CLK(HL)	D&RN&SETN	0.0100	n/a	n/a	0.3095
D(LH)	!CLK&!RN&!SETN	0.0100	n/a	n/a	0.0529
D(LH)	!CLK&!RN&SETN	0.0100	n/a	n/a	0.1995
D(LH)	CLK&!RN&!SETN	0.0100	n/a	n/a	0.0044
D(LH)	CLK&!RN&SETN	0.0100	n/a	n/a	0.0044
D(LH)	!CLK&RN&!SETN	0.0100	n/a	n/a	0.0529
D(LH)	CLK&RN&!SETN	0.0100	n/a	n/a	0.0044
D(LH)	!CLK&RN&SETN	0.0100	n/a	n/a	0.2059
D(LH)	CLK&RN&SETN	0.0100	n/a	n/a	0.0045
RN(HL)	!CLK&!D&SETN	0.0100	n/a	n/a	0.0510
RN(HL)	CLK&!D&SETN	0.0100	n/a	n/a	0.0524
RN(HL)	!CLK&D&SETN	0.0100	n/a	n/a	0.0493
RN(HL)	CLK&D&SETN	0.0100	n/a	n/a	0.0523
RN(LH)	!CLK&!D&SETN	0.0100	n/a	n/a	-0.0487
RN(LH)	!CLK&D&SETN	0.0100	n/a	n/a	-0.0444
RN(LH)	CLK&!D&SETN	0.0100	n/a	n/a	-0.0487
RN(LH)	CLK&D&SETN	0.0100	n/a	n/a	-0.0487
SETN(LH)	!CLK&!D&!RN	0.0100	n/a	n/a	0.1133
SETN(LH)	!CLK&D&!RN	0.0100	n/a	n/a	0.0649
SETN(LH)	CLK&!D&!RN	0.0100	n/a	n/a	0.1070
SETN(LH)	CLK&D&!RN	0.0100	n/a	n/a	0.1070
SETN(LH)	!CLK&!D&RN	0.0100	n/a	n/a	0.0155
SETN(LH)	!CLK&D&RN	0.0100	n/a	n/a	-0.0248
SETN(LH)	CLK&!D&RN	0.0100	n/a	n/a	-0.0248
SETN(LH)	CLK&D&RN	0.0100	n/a	n/a	-0.0248

LEAKAGE POWER

When Condition	Power (nW)
!CLK&!D&!RN&!SETN	0.4782
!CLK&!D&!RN&SETN	0.4904
!CLK&D&!RN&!SETN	0.4766
!CLK&D&!RN&SETN	0.5027
CLK&!D&!RN&!SETN	0.5598
CLK&!D&!RN&SETN	0.5311
CLK&D&!RN&!SETN	0.5617
CLK&D&!RN&SETN	0.5330
CLK&D&RN&SETN	0.7271
!CLK&!D&RN&!SETN	0.4616
!CLK&D&RN&!SETN	0.4585
CLK&!D&RN&!SETN	0.5184
CLK&D&RN&!SETN	0.5157
!CLK&!D&RN&SETN	0.6362
!CLK&D&RN&SETN	0.6269
CLK&!D&RN&SETN	0.5567

gf180mcu_fd_sc_mcu7t5v0__dffrsnq_4

gf180mcu_fd_sc_mcu7t5v0__dffrsnq_4 symbol

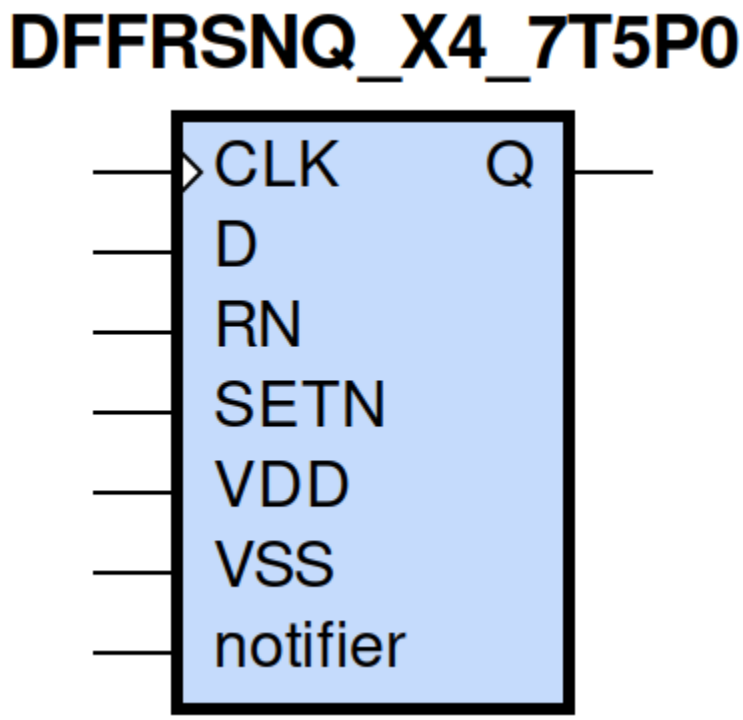

gf180mcu_fd_sc_mcu7t5v0__dffrsnq_4 schematic

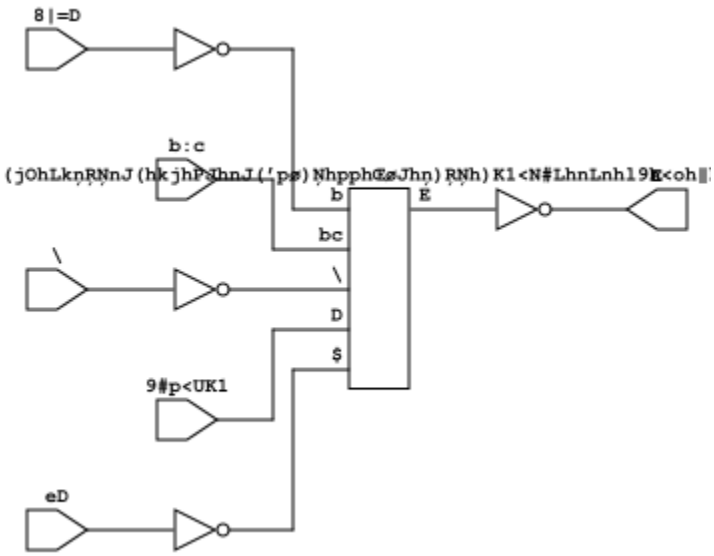

gf180mcu_fd_sc_mcu7t5v0__dffrsnq_4 layout

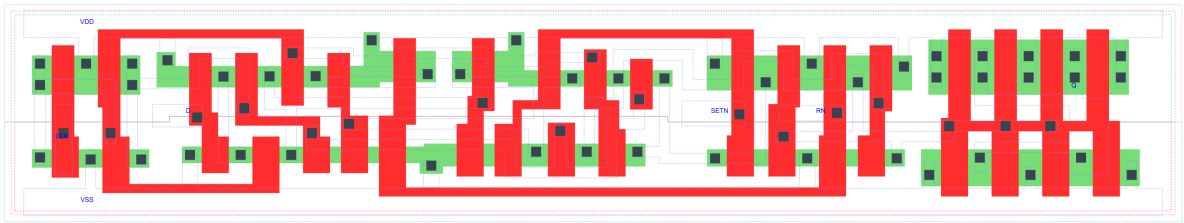

DFFRSNQ_X4 is a positive edge triggered D-type flip flop, active low set/reset, 4X drive strength

Attributes

Attribute	Value
area	98.784000 μm^2

TRUTH TABLE

Input				Output
RN	SETN	D	CLK	Q
H	H	L	↑	L
H	H	H	↑	H
L	H	X	X	L
H	L	X	X	H
L	L	X	X	L

FUNCTIONAL SCHEMATIC

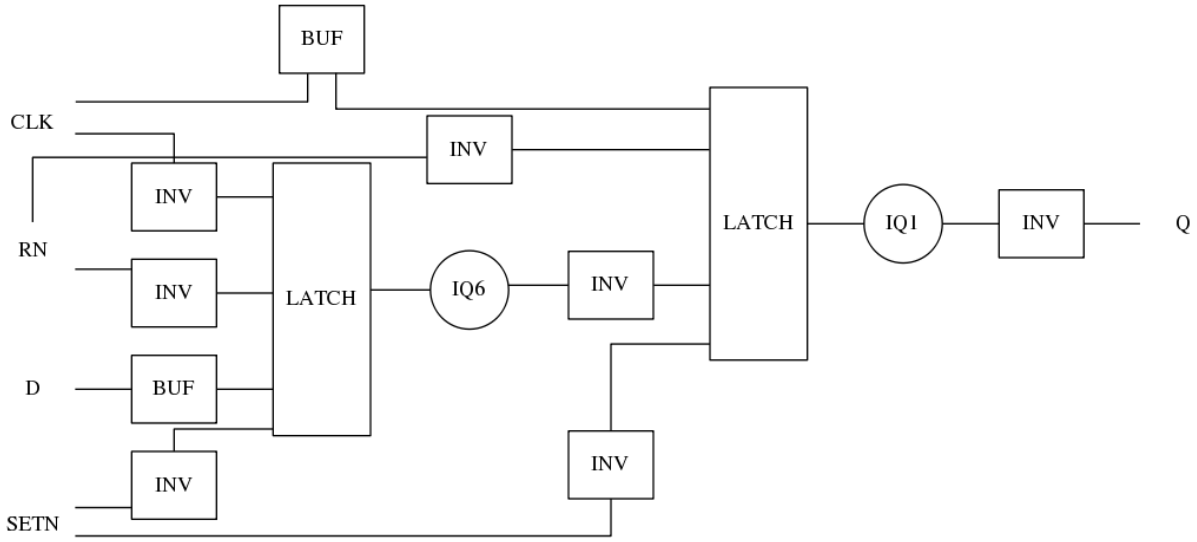

CONSTRAINTS

Constraint Pin	Related Pin	setup(ns)	hold(ns)
D(HL)	CLK(LH)	0.2290	0.0740
D(LH)	CLK(LH)	0.1950	-0.0340
SETN(LH)	RN(LH)	-0.1370	0.2690
SETN(LH)	RN(LH)	-0.0740	0.2060
SETN(LH)	RN(LH)	-0.1370	0.2690
SETN(LH)	RN(LH)	-0.0740	0.2060
RN(LH)	SETN(LH)	0.2690	-0.1370
RN(LH)	SETN(LH)	0.2060	-0.0740
RN(LH)	SETN(LH)	0.2690	-0.1370
RN(LH)	SETN(LH)	0.2060	-0.0740

Constraint Pin	Related Pin	recovery(ns)	removal(ns)
SETN(LH)	CLK(LH)	-0.0860	0.3550
RN(LH)	CLK(LH)	-0.3090	0.4690

Constraint Pin	Related Pin	Minimum Pulse Width(ns)
CLK(HLH)	CLK(HL)	0.4430
CLK(HLH)	CLK(HL)	0.3570
CLK(LHL)	CLK(LH)	0.6030
CLK(LHL)	CLK(LH)	0.7590
SETN(HLH)	SETN(HL)	0.5730
SETN(HLH)	SETN(HL)	0.6900
SETN(HLH)	SETN(HL)	0.5730
SETN(HLH)	SETN(HL)	0.6900
RN(HLH)	RN(HL)	0.4850
RN(HLH)	RN(HL)	0.4560
RN(HLH)	RN(HL)	0.4850
RN(HLH)	RN(HL)	0.4560

PIN CAPACITANCE (pf)

Pin	Type	Capacitance (pf)
CLK	input	0.0034
D	input	0.0026
SETN	input	0.0064
RN	input	0.0073

DELAY AND OUTPUT TRANSITION TIME corresponding to min slew and load

Input Pin	Output	When Condition	Tin (ns)	Out Load (pf)	Delay (ns)	Tout (ns)
CLK(LH)	Q(HL)	!D&RN&SETN	0.0100	0.0010	0.8434	0.0618
CLK(LH)	Q(LH)	D&RN&SETN	0.0100	0.0010	1.0647	0.0729
SETN(HL)	Q(LH)	!CLK&!D&RN	0.0100	0.0010	0.8354	0.0722
SETN(HL)	Q(LH)	CLK&!D&RN	0.0100	0.0010	1.1288	0.0727
SETN(HL)	Q(LH)	!CLK&D&RN	0.0100	0.0010	0.8354	0.0722
SETN(HL)	Q(LH)	CLK&D&RN	0.0100	0.0010	1.1288	0.0729
RN(HL)	Q(HL)	!CLK&!D&SETN	0.0100	0.0010	0.3533	0.0619
RN(HL)	Q(HL)	CLK&!D&SETN	0.0100	0.0010	0.3535	0.0620
RN(HL)	Q(HL)	!CLK&D&SETN	0.0100	0.0010	0.3533	0.0620
RN(HL)	Q(HL)	CLK&D&SETN	0.0100	0.0010	0.3535	0.0620
RN(HL)	Q(HL)	!CLK&!D&!SETN	0.0100	0.0010	0.3521	0.0614
RN(HL)	Q(HL)	!CLK&D&!SETN	0.0100	0.0010	0.3521	0.0614
RN(HL)	Q(HL)	CLK&!D&!SETN	0.0100	0.0010	0.3522	0.0609
RN(HL)	Q(HL)	CLK&D&!SETN	0.0100	0.0010	0.3522	0.0609
RN(LH)	Q(LH)	!CLK&!D&!SETN	0.0100	0.0010	0.5281	0.0710
RN(LH)	Q(LH)	!CLK&D&!SETN	0.0100	0.0010	0.5281	0.0710
RN(LH)	Q(LH)	CLK&!D&!SETN	0.0100	0.0010	0.5345	0.0716
RN(LH)	Q(LH)	CLK&D&!SETN	0.0100	0.0010	0.5345	0.0715

DYNAMIC ENERGY

Input Pin	When Condition	Tin (ns)	Output	Out Load (pf)	Energy (uW/MHz)
CLK	!D&RN&SETN	0.0100	Q(HL)	0.0010	1.2392
CLK	D&RN&SETN	0.0100	Q(LH)	0.0010	1.4751
SETN	!CLK&!D&RN	0.0100	Q(LH)	0.0010	1.2824
SETN	CLK&!D&RN	0.0100	Q(LH)	0.0010	1.4115
SETN	!CLK&D&RN	0.0100	Q(LH)	0.0010	1.1611
SETN	CLK&D&RN	0.0100	Q(LH)	0.0010	1.4114
RN	!CLK&!D&SETN	0.0100	Q(HL)	0.0010	1.0162
RN	CLK&!D&SETN	0.0100	Q(HL)	0.0010	1.2545
RN	!CLK&D&SETN	0.0100	Q(HL)	0.0010	1.0163
RN	CLK&D&SETN	0.0100	Q(HL)	0.0010	1.2536
RN	!CLK&!D&!SETN	0.0100	Q(HL)	0.0010	0.8751
RN	!CLK&D&!SETN	0.0100	Q(HL)	0.0010	0.8735
RN	CLK&!D&!SETN	0.0100	Q(HL)	0.0010	1.0228
RN	CLK&D&!SETN	0.0100	Q(HL)	0.0010	1.0228
RN	!CLK&!D&!SETN	0.0100	Q(LH)	0.0010	0.8451
RN	!CLK&D&!SETN	0.0100	Q(LH)	0.0010	0.8463
RN	CLK&!D&!SETN	0.0100	Q(LH)	0.0010	0.9367
RN	CLK&D&!SETN	0.0100	Q(LH)	0.0010	0.9367
SETN(HL)	!CLK&!D&!RN	0.0100	n/a	n/a	0.3527
SETN(HL)	!CLK&D&!RN	0.0100	n/a	n/a	0.2378
SETN(HL)	CLK&!D&!RN	0.0100	n/a	n/a	0.3528
SETN(HL)	CLK&D&!RN	0.0100	n/a	n/a	0.3528
SETN(HL)	!CLK&!D&RN	0.0100	n/a	n/a	0.1627
SETN(HL)	CLK&!D&RN	0.0100	n/a	n/a	0.0418

continues on next page

Table 48 – continued from previous page

SETN(HL)	!CLK&D&RN	0.0100	n/a	n/a	0.0418
SETN(HL)	CLK&D&RN	0.0100	n/a	n/a	0.0418
D(HL)	!CLK&!RN&!SETN	0.0100	n/a	n/a	0.1650
D(HL)	!CLK&!RN&SETN	0.0100	n/a	n/a	0.2457
D(HL)	CLK&!RN&!SETN	0.0100	n/a	n/a	0.0557
D(HL)	CLK&!RN&SETN	0.0100	n/a	n/a	0.0557
D(HL)	!CLK&RN&!SETN	0.0100	n/a	n/a	0.1650
D(HL)	CLK&RN&!SETN	0.0100	n/a	n/a	0.0557
D(HL)	!CLK&RN&SETN	0.0100	n/a	n/a	0.2366
D(HL)	CLK&RN&SETN	0.0100	n/a	n/a	0.0557
CLK(LH)	!D&!RN&!SETN	0.0100	n/a	n/a	0.2531
CLK(LH)	!D&!RN&SETN	0.0100	n/a	n/a	0.2502
CLK(LH)	D&!RN&!SETN	0.0100	n/a	n/a	0.3598
CLK(LH)	D&!RN&SETN	0.0100	n/a	n/a	0.5055
CLK(LH)	!D&RN&!SETN	0.0100	n/a	n/a	0.3102
CLK(LH)	D&RN&!SETN	0.0100	n/a	n/a	0.2578
CLK(LH)	!D&RN&SETN	0.0100	n/a	n/a	0.2504
CLK(LH)	D&RN&SETN	0.0100	n/a	n/a	0.2578
CLK(HL)	!D&!RN&!SETN	0.0100	n/a	n/a	0.3076
CLK(HL)	!D&!RN&SETN	0.0100	n/a	n/a	0.3110
CLK(HL)	D&!RN&!SETN	0.0100	n/a	n/a	0.3568
CLK(HL)	D&!RN&SETN	0.0100	n/a	n/a	0.5154
CLK(HL)	!D&RN&!SETN	0.0100	n/a	n/a	0.4600
CLK(HL)	D&RN&!SETN	0.0100	n/a	n/a	0.3072
CLK(HL)	!D&RN&SETN	0.0100	n/a	n/a	0.3111
CLK(HL)	D&RN&SETN	0.0100	n/a	n/a	0.3072
D(LH)	!CLK&!RN&!SETN	0.0100	n/a	n/a	0.0537
D(LH)	!CLK&!RN&SETN	0.0100	n/a	n/a	0.1998
D(LH)	CLK&!RN&!SETN	0.0100	n/a	n/a	0.0049
D(LH)	CLK&!RN&SETN	0.0100	n/a	n/a	0.0049
D(LH)	!CLK&RN&!SETN	0.0100	n/a	n/a	0.0537
D(LH)	CLK&RN&!SETN	0.0100	n/a	n/a	0.0050
D(LH)	!CLK&RN&SETN	0.0100	n/a	n/a	0.2063
D(LH)	CLK&RN&SETN	0.0100	n/a	n/a	0.0049
RN(HL)	!CLK&!D&SETN	0.0100	n/a	n/a	0.0489
RN(HL)	CLK&!D&SETN	0.0100	n/a	n/a	0.0503
RN(HL)	!CLK&D&SETN	0.0100	n/a	n/a	0.0473
RN(HL)	CLK&D&SETN	0.0100	n/a	n/a	0.0502
RN(LH)	!CLK&!D&SETN	0.0100	n/a	n/a	-0.0467
RN(LH)	!CLK&D&SETN	0.0100	n/a	n/a	-0.0426
RN(LH)	CLK&!D&SETN	0.0100	n/a	n/a	-0.0467
RN(LH)	CLK&D&SETN	0.0100	n/a	n/a	-0.0467
SETN(LH)	!CLK&!D&!RN	0.0100	n/a	n/a	0.1153
SETN(LH)	!CLK&D&!RN	0.0100	n/a	n/a	0.0649
SETN(LH)	CLK&!D&!RN	0.0100	n/a	n/a	0.1089
SETN(LH)	CLK&D&!RN	0.0100	n/a	n/a	0.1089
SETN(LH)	!CLK&!D&RN	0.0100	n/a	n/a	0.0174
SETN(LH)	!CLK&D&RN	0.0100	n/a	n/a	-0.0248
SETN(LH)	CLK&!D&RN	0.0100	n/a	n/a	-0.0248
SETN(LH)	CLK&D&RN	0.0100	n/a	n/a	-0.0248

LEAKAGE POWER

When Condition	Power (nW)
!CLK&!D&!RN&!SETN	0.5311
!CLK&!D&!RN&SETN	0.5433
!CLK&D&!RN&!SETN	0.5297
!CLK&D&!RN&SETN	0.5558
CLK&!D&!RN&!SETN	0.6128
CLK&!D&!RN&SETN	0.5841
CLK&D&!RN&!SETN	0.6149
CLK&D&!RN&SETN	0.5861
CLK&D&RN&SETN	0.7820
!CLK&!D&RN&!SETN	0.5126
!CLK&D&RN&!SETN	0.5096
CLK&!D&RN&!SETN	0.5693
CLK&D&RN&!SETN	0.5666
!CLK&!D&RN&SETN	0.6870
!CLK&D&RN&SETN	0.6780
CLK&!D&RN&SETN	0.6096

gf180mcu_fd_sc_mcu7t5v0__dffsnq_1

gf180mcu_fd_sc_mcu7t5v0__dffsnq_1 symbol

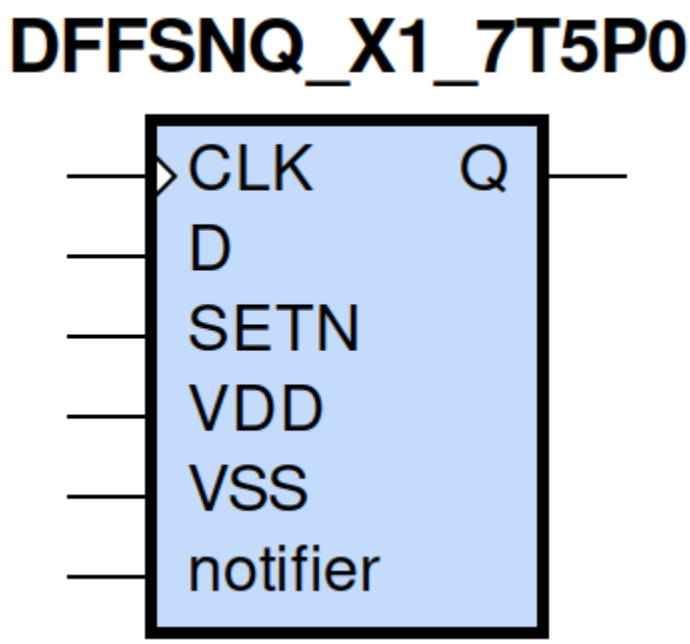

gf180mcu_fd_sc_mcu7t5v0__dffsnq_1 schematic

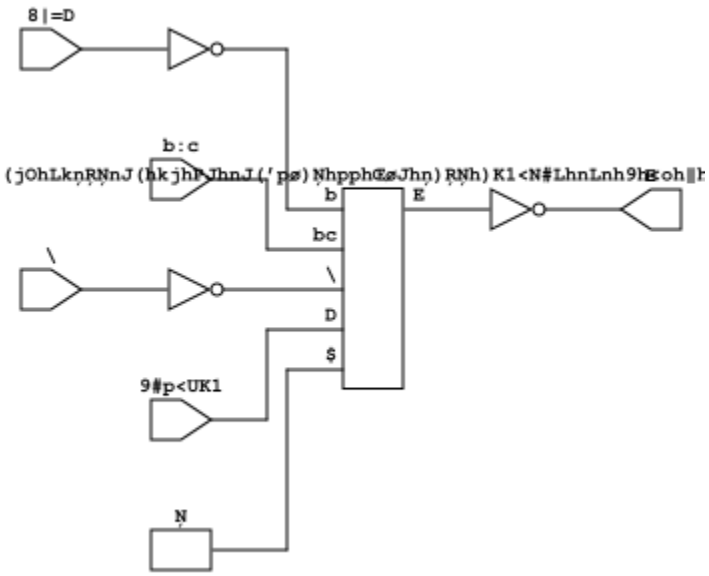

gf180mcu_fd_sc_mcu7t5v0__dffsnq_1 layout

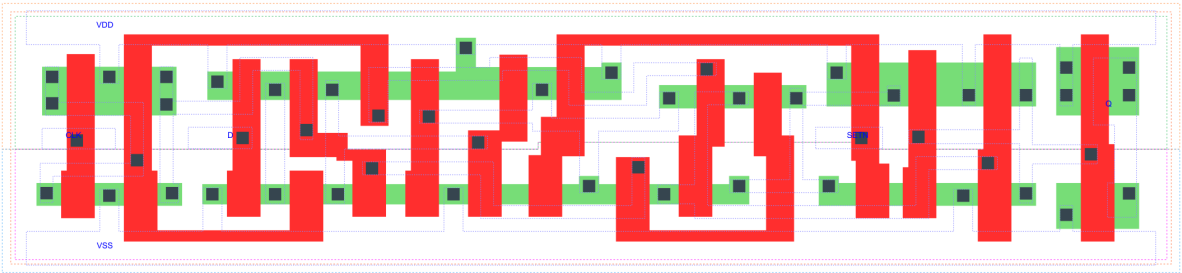

DFFSNQ_X1 is a positive edge triggered D-type flip flop, active low set, 1X drive strength

Attributes

Attribute	Value
area	79.027200 μm^2

TRUTH TABLE

Input			Output
SETN	D	CLK	Q
H	L	↑	L
H	H	↑	H
L	X	X	H

FUNCTIONAL SCHEMATIC

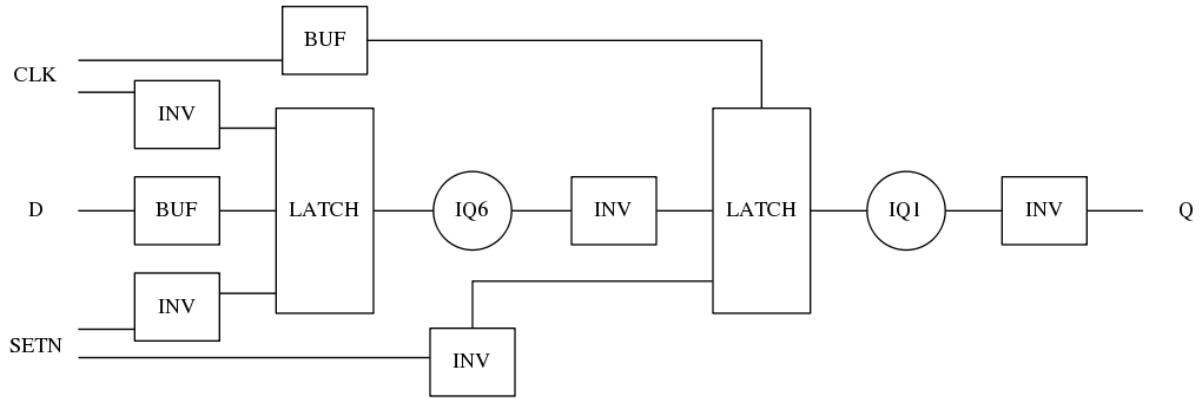

CONSTRAINTS

Constraint Pin	Related Pin	setup(ns)	hold(ns)
D(HL)	CLK(LH)	0.2400	0.0460
D(LH)	CLK(LH)	0.2290	-0.0230

Constraint Pin	Related Pin	recovery(ns)	removal(ns)
SETN(LH)	CLK(LH)	-0.0340	0.2400

Constraint Pin	Related Pin	Minimum Pulse Width(ns)
CLK(HLH)	CLK(HL)	0.4490
CLK(HLH)	CLK(HL)	0.3510
CLK(LHL)	CLK(LH)	0.4660
CLK(LHL)	CLK(LH)	0.4760
SETN(HLH)	SETN(HL)	0.3290
SETN(HLH)	SETN(HL)	0.3290
SETN(HLH)	SETN(HL)	0.3880
SETN(HLH)	SETN(HL)	0.3880

PIN CAPACITANCE (pf)

Pin	Type	Capacitance (pf)
CLK	input	0.0034
D	input	0.0026
SETN	input	0.0066

DELAY AND OUTPUT TRANSITION TIME corresponding to min slew and load

Input Pin	Output	When Condition	Tin (ns)	Out Load (pf)	Delay (ns)	Tout (ns)
CLK(LH)	Q(HL)	!D&SETN	0.0100	0.0010	0.7090	0.0458
CLK(LH)	Q(LH)	D&SETN	0.0100	0.0010	0.6946	0.0484
SETN(HL)	Q(LH)	!CLK&!D	0.0100	0.0010	0.4838	0.0473
SETN(HL)	Q(LH)	!CLK&D	0.0100	0.0010	0.4841	0.0477
SETN(HL)	Q(LH)	CLK&!D	0.0100	0.0010	0.5831	0.0482
SETN(HL)	Q(LH)	CLK&D	0.0100	0.0010	0.5830	0.0481

DYNAMIC ENERGY

Input Pin	When Condition	Tin (ns)	Output	Out Load (pf)	Energy (uW/MHz)
CLK	!D&SETN	0.0100	Q(HL)	0.0010	0.5962
CLK	D&SETN	0.0100	Q(LH)	0.0010	0.6638
SETN	!CLK&!D	0.0100	Q(LH)	0.0010	0.5363
SETN	!CLK&D	0.0100	Q(LH)	0.0010	0.4330
SETN	CLK&!D	0.0100	Q(LH)	0.0010	0.6246
SETN	CLK&D	0.0100	Q(LH)	0.0010	0.6245
SETN(HL)	!CLK&!D	0.0100	n/a	n/a	0.1501
SETN(HL)	!CLK&D	0.0100	n/a	n/a	0.0480

continues on next page

Table 49 – continued from previous page

SETN(HL)	CLK&!D	0.0100	n/a	n/a	0.0481
SETN(HL)	CLK&D	0.0100	n/a	n/a	0.0481
D(HL)	!CLK&!SETN	0.0100	n/a	n/a	0.1502
D(HL)	CLK&!SETN	0.0100	n/a	n/a	0.0569
D(HL)	!CLK&SETN	0.0100	n/a	n/a	0.2162
D(HL)	CLK&SETN	0.0100	n/a	n/a	0.0569
CLK(LH)	!D&!SETN	0.0100	n/a	n/a	0.2994
CLK(LH)	D&!SETN	0.0100	n/a	n/a	0.2430
CLK(LH)	!D&SETN	0.0100	n/a	n/a	0.2370
CLK(LH)	D&SETN	0.0100	n/a	n/a	0.2430
CLK(HL)	!D&!SETN	0.0100	n/a	n/a	0.4478
CLK(HL)	D&!SETN	0.0100	n/a	n/a	0.3008
CLK(HL)	!D&SETN	0.0100	n/a	n/a	0.3022
CLK(HL)	D&SETN	0.0100	n/a	n/a	0.3007
D(LH)	!CLK&!SETN	0.0100	n/a	n/a	0.0545
D(LH)	CLK&!SETN	0.0100	n/a	n/a	0.0050
D(LH)	!CLK&SETN	0.0100	n/a	n/a	0.1821
D(LH)	CLK&SETN	0.0100	n/a	n/a	0.0050
SETN(LH)	!CLK&!D	0.0100	n/a	n/a	0.0160
SETN(LH)	!CLK&D	0.0100	n/a	n/a	-0.0313
SETN(LH)	CLK&!D	0.0100	n/a	n/a	-0.0313
SETN(LH)	CLK&D	0.0100	n/a	n/a	-0.0313

LEAKAGE POWER

When Condition	Power (nW)
!CLK&!D&!SETN	0.4124
!CLK&D&!SETN	0.4073
CLK&!D&!SETN	0.4486
CLK&D&!SETN	0.4455
!CLK&!D&SETN	0.5905
!CLK&D&SETN	0.5709
CLK&!D&SETN	0.5353
CLK&D&SETN	0.5996

gf180mcu_fd_sc_mcu7t5v0__dffsnq_2

gf180mcu_fd_sc_mcu7t5v0__dffsnq_2 symbol

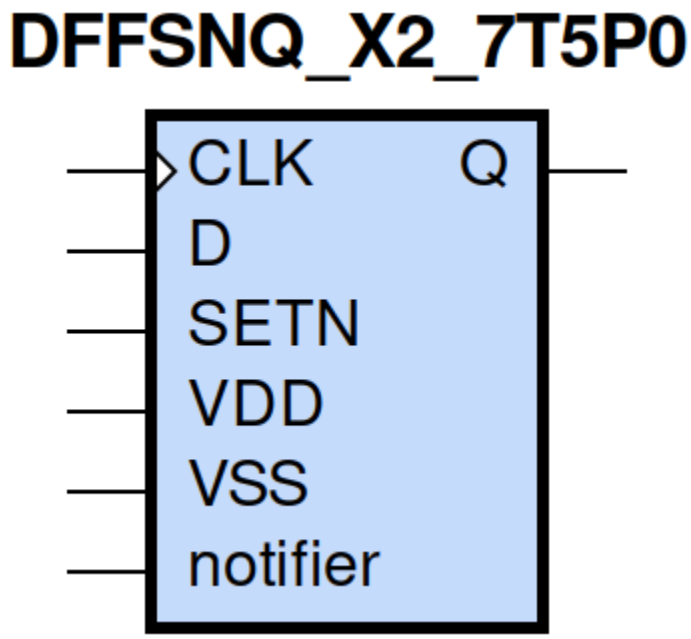

gf180mcu_fd_sc_mcu7t5v0__dffsnq_2 schematic

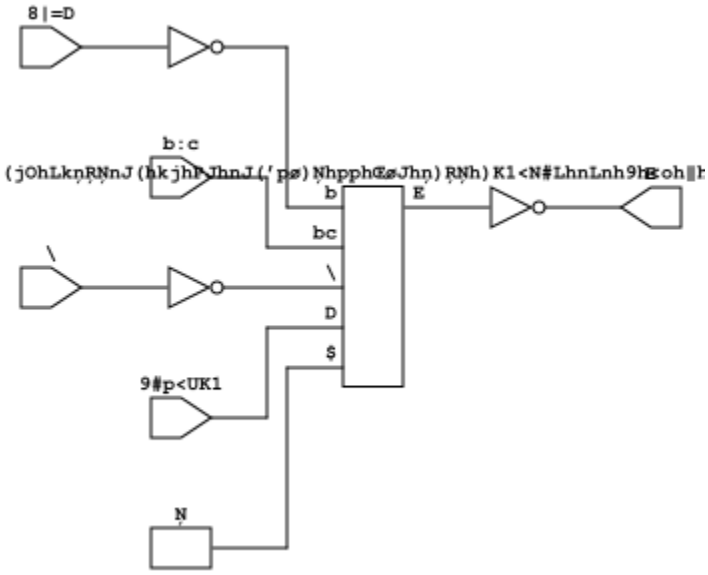

gf180mcu_fd_sc_mcu7t5v0__dffsnq_2 layout

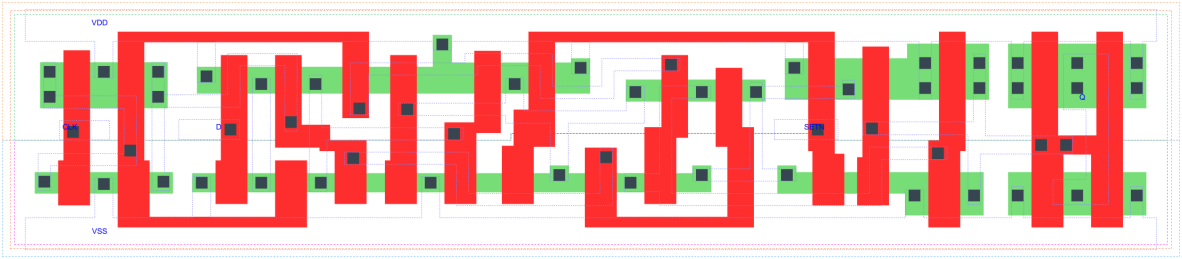

DFFSNQ_X2 is a positive edge triggered D-type flip flop, active low set, 2X drive strength

Attributes

Attribute	Value
area	83.417600 μm^2

TRUTH TABLE

Input			Output
SETN	D	CLK	Q
H	L	↑	L
H	H	↑	H
L	X	X	H

FUNCTIONAL SCHEMATIC

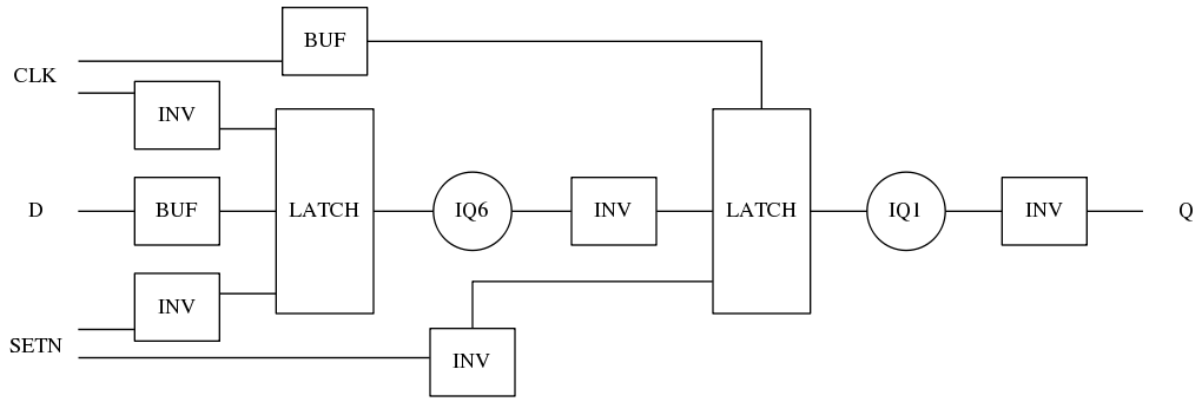

CONSTRAINTS

Constraint Pin	Related Pin	setup(ns)	hold(ns)
D(HL)	CLK(LH)	0.2520	0.0460
D(LH)	CLK(LH)	0.2460	-0.0170

Constraint Pin	Related Pin	recovery(ns)	removal(ns)
SETN(LH)	CLK(LH)	-0.0230	0.2350

Constraint Pin	Related Pin	Minimum Pulse Width(ns)
CLK(HLH)	CLK(HL)	0.4550
CLK(HLH)	CLK(HL)	0.3570
CLK(LHL)	CLK(LH)	0.5150
CLK(LHL)	CLK(LH)	0.4760
SETN(HLH)	SETN(HL)	0.3290
SETN(HLH)	SETN(HL)	0.3290
SETN(HLH)	SETN(HL)	0.3980
SETN(HLH)	SETN(HL)	0.3980

PIN CAPACITANCE (pf)

Pin	Type	Capacitance (pf)
CLK	input	0.0033
D	input	0.0026
SETN	input	0.0066

DELAY AND OUTPUT TRANSITION TIME corresponding to min slew and load

Input Pin	Output	When Condition	Tin (ns)	Out Load (pf)	Delay (ns)	Tout (ns)
CLK(LH)	Q(HL)	!D&SETN	0.0100	0.0010	0.7482	0.0413
CLK(LH)	Q(LH)	D&SETN	0.0100	0.0010	0.6701	0.0375
SETN(HL)	Q(LH)	!CLK&!D	0.0100	0.0010	0.4570	0.0361
SETN(HL)	Q(LH)	!CLK&D	0.0100	0.0010	0.4571	0.0366
SETN(HL)	Q(LH)	CLK&!D	0.0100	0.0010	0.5559	0.0377
SETN(HL)	Q(LH)	CLK&D	0.0100	0.0010	0.5559	0.0377

DYNAMIC ENERGY

Input Pin	When Condition	Tin (ns)	Output	Out Load (pf)	Energy (uW/MHz)
CLK	!D&SETN	0.0100	Q(HL)	0.0010	0.7770
CLK	D&SETN	0.0100	Q(LH)	0.0010	0.8076
SETN	!CLK&!D	0.0100	Q(LH)	0.0010	0.6749
SETN	!CLK&D	0.0100	Q(LH)	0.0010	0.5717
SETN	CLK&!D	0.0100	Q(LH)	0.0010	0.7750
SETN	CLK&D	0.0100	Q(LH)	0.0010	0.7751
SETN(HL)	!CLK&!D	0.0100	n/a	n/a	0.1501
SETN(HL)	!CLK&D	0.0100	n/a	n/a	0.0480
SETN(HL)	CLK&!D	0.0100	n/a	n/a	0.0481
SETN(HL)	CLK&D	0.0100	n/a	n/a	0.0481
D(HL)	!CLK&!SETN	0.0100	n/a	n/a	0.1503
D(HL)	CLK&!SETN	0.0100	n/a	n/a	0.0569
D(HL)	!CLK&SETN	0.0100	n/a	n/a	0.2161
D(HL)	CLK&SETN	0.0100	n/a	n/a	0.0569
CLK(LH)	!D&!SETN	0.0100	n/a	n/a	0.2994
CLK(LH)	D&!SETN	0.0100	n/a	n/a	0.2429
CLK(LH)	!D&SETN	0.0100	n/a	n/a	0.2367
CLK(LH)	D&SETN	0.0100	n/a	n/a	0.2428
CLK(HL)	!D&!SETN	0.0100	n/a	n/a	0.4454
CLK(HL)	D&!SETN	0.0100	n/a	n/a	0.2985
CLK(HL)	!D&SETN	0.0100	n/a	n/a	0.2999
CLK(HL)	D&SETN	0.0100	n/a	n/a	0.2985
D(LH)	!CLK&!SETN	0.0100	n/a	n/a	0.0545
D(LH)	CLK&!SETN	0.0100	n/a	n/a	0.0050
D(LH)	!CLK&SETN	0.0100	n/a	n/a	0.1821
D(LH)	CLK&SETN	0.0100	n/a	n/a	0.0050
SETN(LH)	!CLK&!D	0.0100	n/a	n/a	0.0160
SETN(LH)	!CLK&D	0.0100	n/a	n/a	-0.0313
SETN(LH)	CLK&!D	0.0100	n/a	n/a	-0.0313
SETN(LH)	CLK&D	0.0100	n/a	n/a	-0.0313

LEAKAGE POWER

When Condition	Power (nW)
!CLK&!D&!SETN	0.4380
!CLK&D&!SETN	0.4330
CLK&!D&!SETN	0.4742
CLK&D&!SETN	0.4711
!CLK&!D&SETN	0.6160
!CLK&D&SETN	0.5964
CLK&!D&SETN	0.5609
CLK&D&SETN	0.6251

gf180mcu_fd_sc_mcu7t5v0__dffsnq_4

gf180mcu_fd_sc_mcu7t5v0__dffsnq_4 symbol

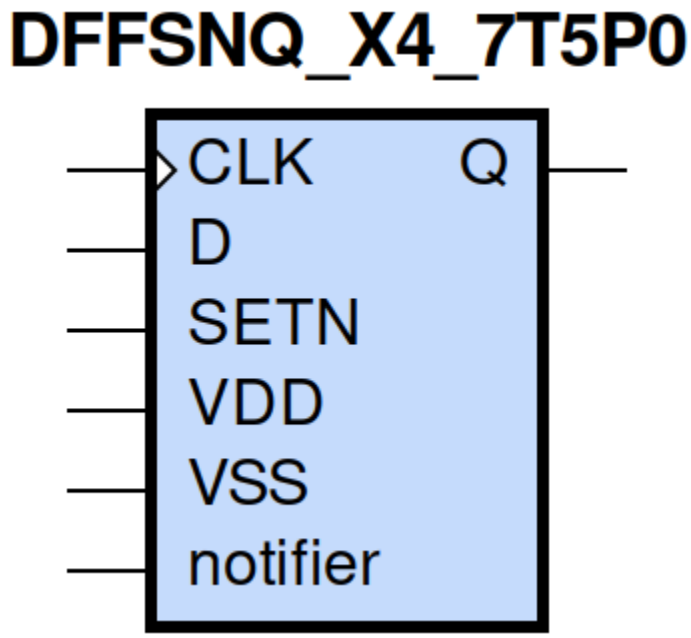

gf180mcu_fd_sc_mcu7t5v0__dffsnq_4 schematic

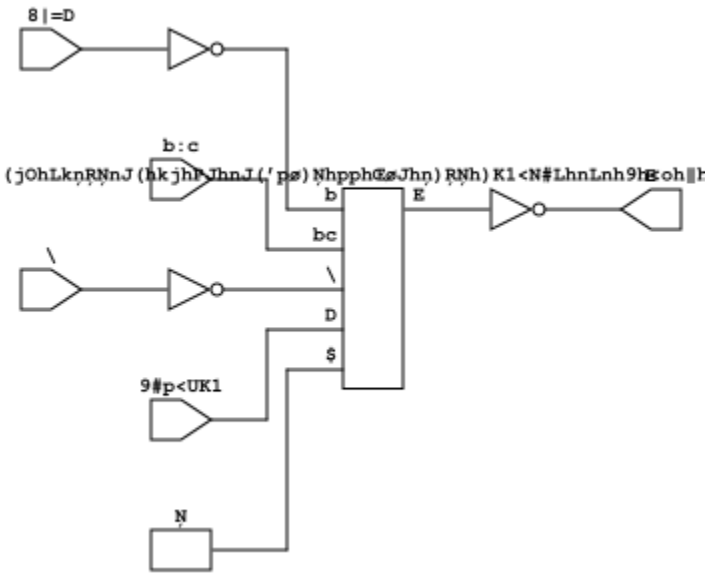

gf180mcu_fd_sc_mcu7t5v0__dffsnq_4 layout

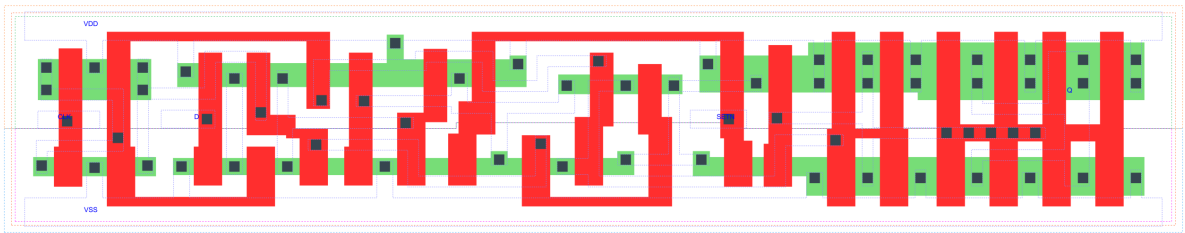

DFFSNQ_X4 is a positive edge triggered D-type flip flop, active low set, 4X drive strength

Attributes

Attribute	Value
area	94.393600 μm^2

TRUTH TABLE

Input			Output
SETN	D	CLK	Q
H	L	↑	L
H	H	↑	H
L	X	X	H

FUNCTIONAL SCHEMATIC

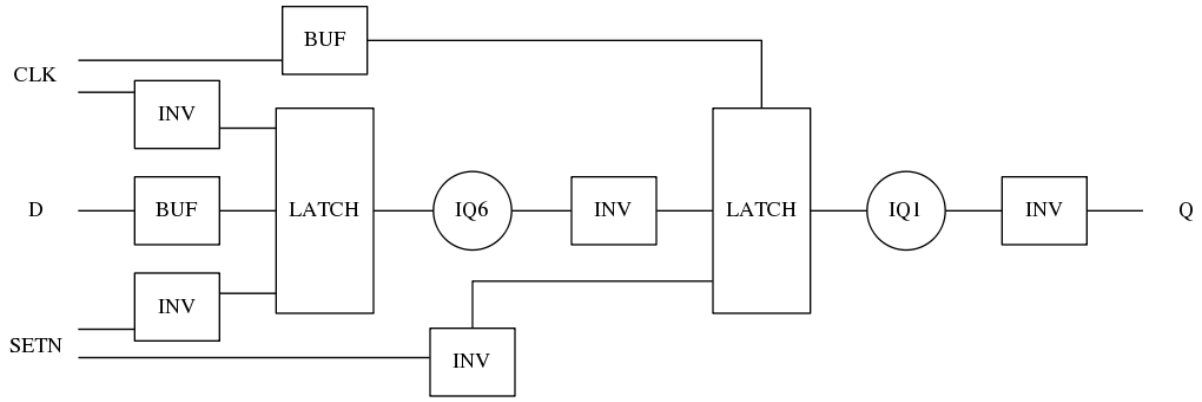

CONSTRAINTS

Constraint Pin	Related Pin	setup(ns)	hold(ns)
D(HL)	CLK(LH)	0.2520	0.0520
D(LH)	CLK(LH)	0.2460	-0.0060

Constraint Pin	Related Pin	recovery(ns)	removal(ns)
SETN(LH)	CLK(LH)	-0.0230	0.2180

Constraint Pin	Related Pin	Minimum Pulse Width(ns)
CLK(HLH)	CLK(HL)	0.4610
CLK(HLH)	CLK(HL)	0.3570
CLK(LHL)	CLK(LH)	0.5730
CLK(LHL)	CLK(LH)	0.5340
SETN(HLH)	SETN(HL)	0.3780
SETN(HLH)	SETN(HL)	0.3780
SETN(HLH)	SETN(HL)	0.4560
SETN(HLH)	SETN(HL)	0.4560

PIN CAPACITANCE (pf)

Pin	Type	Capacitance (pf)
CLK	input	0.0034
D	input	0.0026
SETN	input	0.0065

DELAY AND OUTPUT TRANSITION TIME corresponding to min slew and load

Input Pin	Output	When Condition	Tin (ns)	Out Load (pf)	Delay (ns)	Tout (ns)
CLK(LH)	Q(HL)	!D&SETN	0.0100	0.0010	0.8247	0.0390
CLK(LH)	Q(LH)	D&SETN	0.0100	0.0010	0.7267	0.0368
SETN(HL)	Q(LH)	!CLK&!D	0.0100	0.0010	0.5039	0.0349
SETN(HL)	Q(LH)	!CLK&D	0.0100	0.0010	0.5044	0.0349
SETN(HL)	Q(LH)	CLK&!D	0.0100	0.0010	0.6120	0.0363
SETN(HL)	Q(LH)	CLK&D	0.0100	0.0010	0.6117	0.0362

DYNAMIC ENERGY

Input Pin	When Condition	Tin (ns)	Output	Out Load (pf)	Energy (uW/MHz)
CLK	!D&SETN	0.0100	Q(HL)	0.0010	1.1992
CLK	D&SETN	0.0100	Q(LH)	0.0010	1.2253
SETN	!CLK&!D	0.0100	Q(LH)	0.0010	1.0598
SETN	!CLK&D	0.0100	Q(LH)	0.0010	0.9574
SETN	CLK&!D	0.0100	Q(LH)	0.0010	1.1938
SETN	CLK&D	0.0100	Q(LH)	0.0010	1.1931
SETN(HL)	!CLK&!D	0.0100	n/a	n/a	0.1502
SETN(HL)	!CLK&D	0.0100	n/a	n/a	0.0480

continues on next page

Table 51 – continued from previous page

SETN(HL)	CLK&!D	0.0100	n/a	n/a	0.0481
SETN(HL)	CLK&D	0.0100	n/a	n/a	0.0481
D(HL)	!CLK&!SETN	0.0100	n/a	n/a	0.1503
D(HL)	CLK&!SETN	0.0100	n/a	n/a	0.0569
D(HL)	!CLK&SETN	0.0100	n/a	n/a	0.2162
D(HL)	CLK&SETN	0.0100	n/a	n/a	0.0569
CLK(LH)	!D&!SETN	0.0100	n/a	n/a	0.2994
CLK(LH)	D&!SETN	0.0100	n/a	n/a	0.2431
CLK(LH)	!D&SETN	0.0100	n/a	n/a	0.2370
CLK(LH)	D&SETN	0.0100	n/a	n/a	0.2431
CLK(HL)	!D&!SETN	0.0100	n/a	n/a	0.4478
CLK(HL)	D&!SETN	0.0100	n/a	n/a	0.3007
CLK(HL)	!D&SETN	0.0100	n/a	n/a	0.3021
CLK(HL)	D&SETN	0.0100	n/a	n/a	0.3007
D(LH)	!CLK&!SETN	0.0100	n/a	n/a	0.0545
D(LH)	CLK&!SETN	0.0100	n/a	n/a	0.0050
D(LH)	!CLK&SETN	0.0100	n/a	n/a	0.1822
D(LH)	CLK&SETN	0.0100	n/a	n/a	0.0050
SETN(LH)	!CLK&!D	0.0100	n/a	n/a	0.0160
SETN(LH)	!CLK&D	0.0100	n/a	n/a	-0.0313
SETN(LH)	CLK&!D	0.0100	n/a	n/a	-0.0313
SETN(LH)	CLK&D	0.0100	n/a	n/a	-0.0313

LEAKAGE POWER

When Condition	Power (nW)
!CLK&!D&!SETN	0.5153
!CLK&D&!SETN	0.5102
CLK&!D&!SETN	0.5515
CLK&D&!SETN	0.5484
!CLK&!D&SETN	0.6933
!CLK&D&SETN	0.6736
CLK&!D&SETN	0.6394
CLK&D&SETN	0.7028

gf180mcu_fd_sc_mcu7t5v0__dlya_1

gf180mcu_fd_sc_mcu7t5v0__dlya_1 symbol

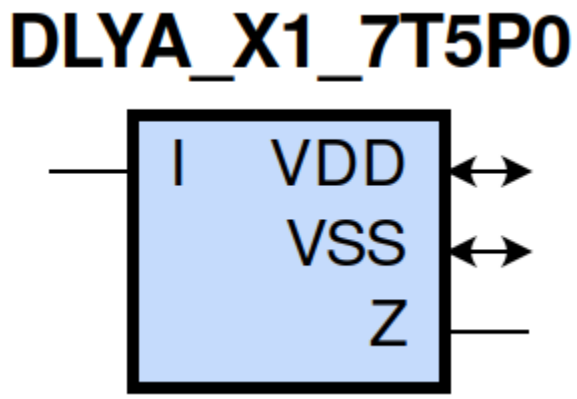

gf180mcu_fd_sc_mcu7t5v0__dlya_1 schematic

gf180mcu_fd_sc_mcu7t5v0__dlya_1 layout

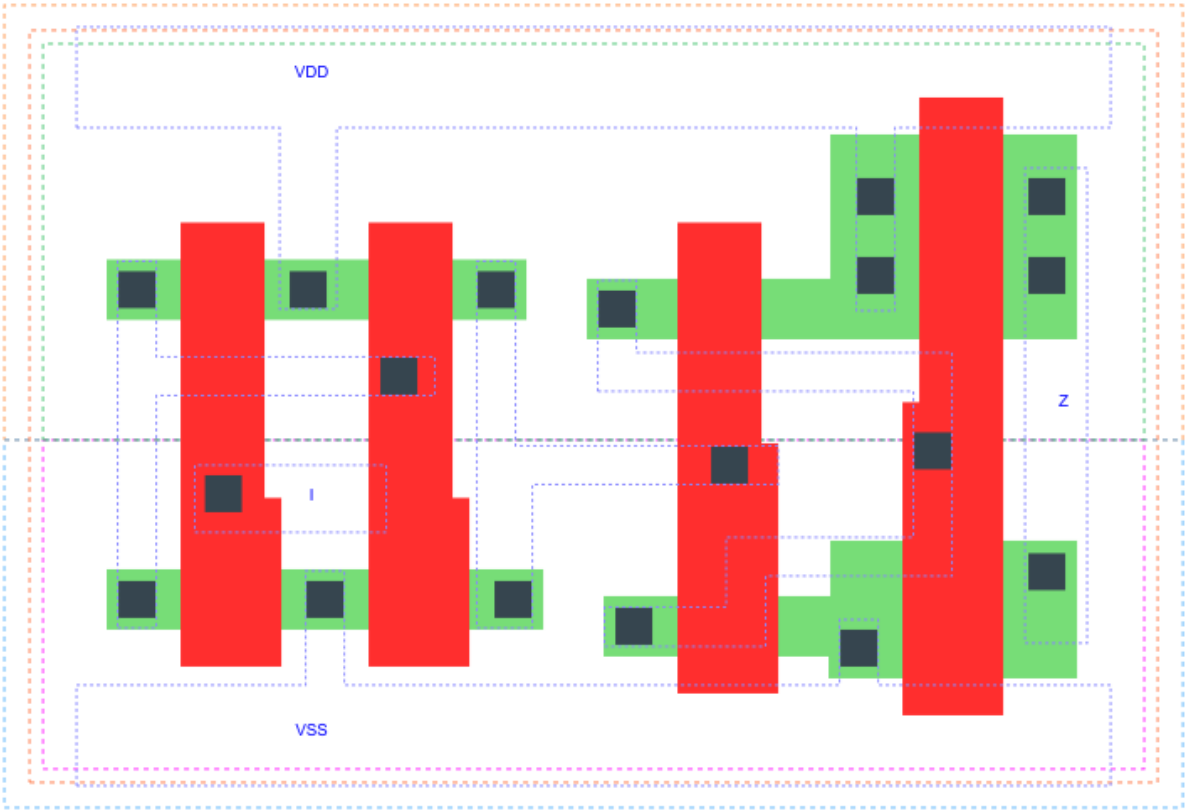

DLYA_X1 is a 2 buffer delay cell, 1X drive strength

Attributes

Attribute	Value
area	24.147200 μm^2

OUTPUT FUNCTIONS

Output Pin	Function
Z	I

TRUTH TABLE FOR Z

I	Z
1	1
0	0

FUNCTIONAL SCHEMATIC

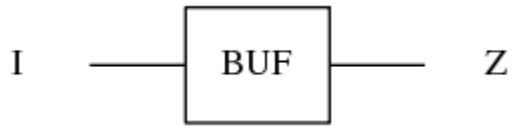

PIN CAPACITANCE (pf)

Pin	Type	Capacitance (pf)
I	input	0.0024

DELAY AND OUTPUT TRANSITION TIME corresponding to min slew and load

Input Pin	Output	When Condition	Tin (ns)	Out Load (pf)	Delay (ns)	Tout (ns)
I(LH)	Z(LH)	default	0.0100	0.0010	0.3725	0.0404
I(HL)	Z(HL)	default	0.0100	0.0010	0.4555	0.0490

DYNAMIC ENERGY

Input Pin	When Condition	Tin (ns)	Output	Out Load (pf)	Energy (uW/MHz)
I	default	0.0100	Z(LH)	0.0010	0.2101
I	default	0.0100	Z(HL)	0.0010	0.2903

LEAKAGE POWER

When Condition	Power (nW)
!I	0.1576
I	0.1549

gf180mcu_fd_sc_mcu7t5v0__dlya_2

gf180mcu_fd_sc_mcu7t5v0__dlya_2 symbol

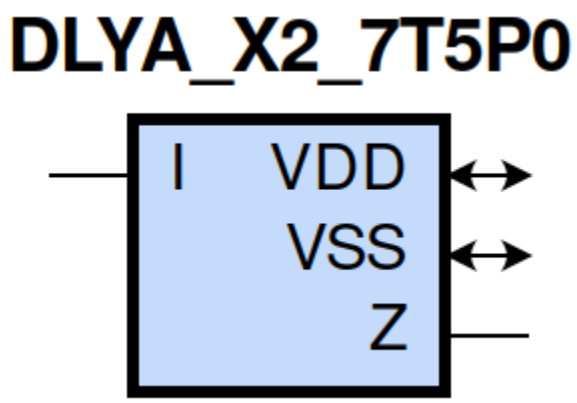

gf180mcu_fd_sc_mcu7t5v0__dlya_2 schematic

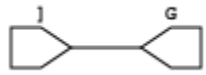

gf180mcu_fd_sc_mcu7t5v0__dlya_2 layout

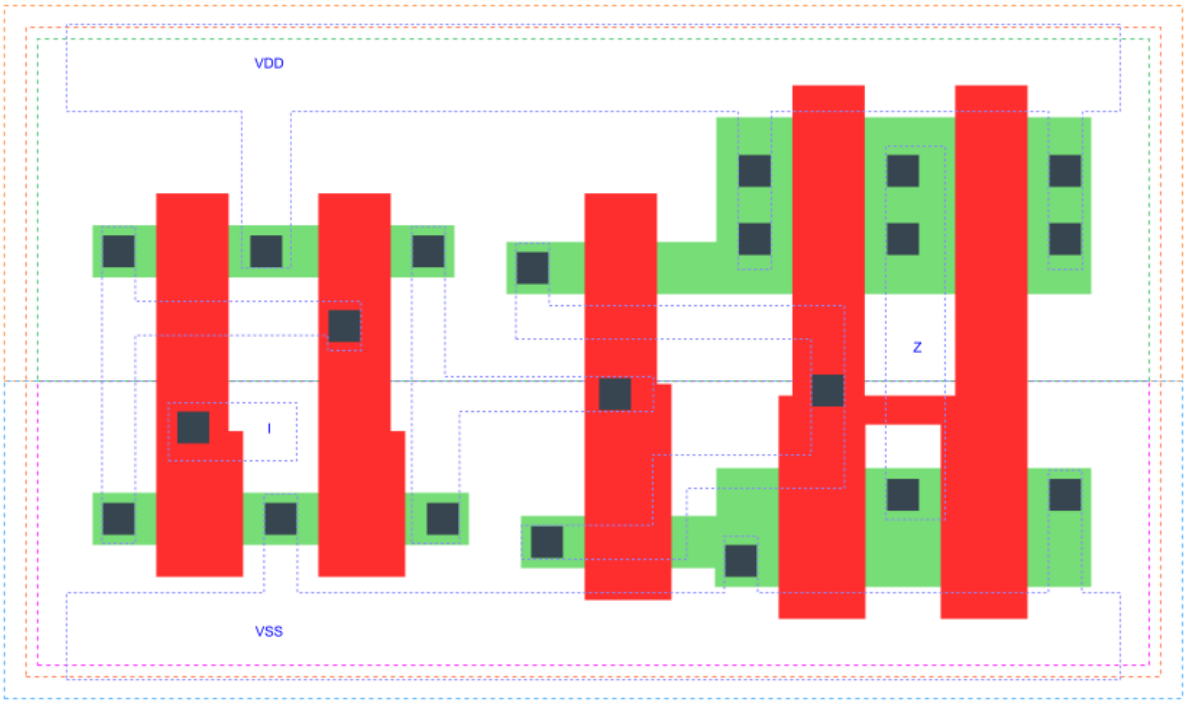

DLYA_X2 is a 2 buffer delay cell, 2X drive strength

Attributes

Attribute	Value
area	28.537600 μm^2

OUTPUT FUNCTIONS

Output Pin	Function
Z	I

TRUTH TABLE FOR Z

I	Z
1	1
0	0

FUNCTIONAL SCHEMATIC

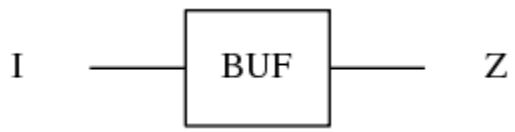

PIN CAPACITANCE (pf)

Pin	Type	Capacitance (pf)
I	input	0.0023

DELAY AND OUTPUT TRANSITION TIME corresponding to min slew and load

Input Pin	Output	When Condition	Tin (ns)	Out Load (pf)	Delay (ns)	Tout (ns)
I(LH)	Z(LH)	default	0.0100	0.0010	0.4202	0.0367
I(HL)	Z(HL)	default	0.0100	0.0010	0.5440	0.0587

DYNAMIC ENERGY

Input Pin	When Condition	Tin (ns)	Output	Out Load (pf)	Energy (uW/MHz)
I	default	0.0100	Z(LH)	0.0010	0.3165
I	default	0.0100	Z(HL)	0.0010	0.5045

LEAKAGE POWER

When Condition	Power (nW)
!I	0.1841
I	0.1804

gf180mcu_fd_sc_mcu7t5v0__dlya_4

gf180mcu_fd_sc_mcu7t5v0__dlya_4 symbol

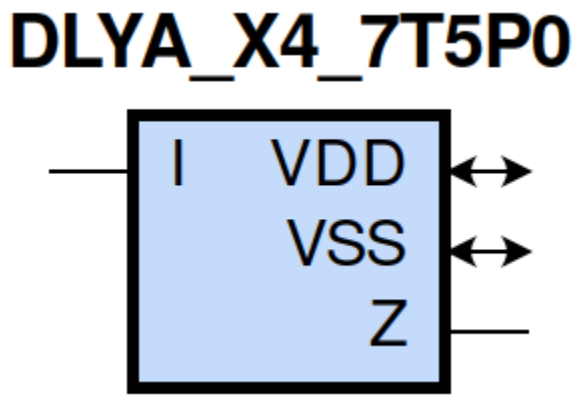

gf180mcu_fd_sc_mcu7t5v0__dlya_4 schematic

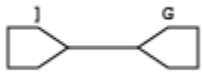

gf180mcu_fd_sc_mcu7t5v0__dlya_4 layout

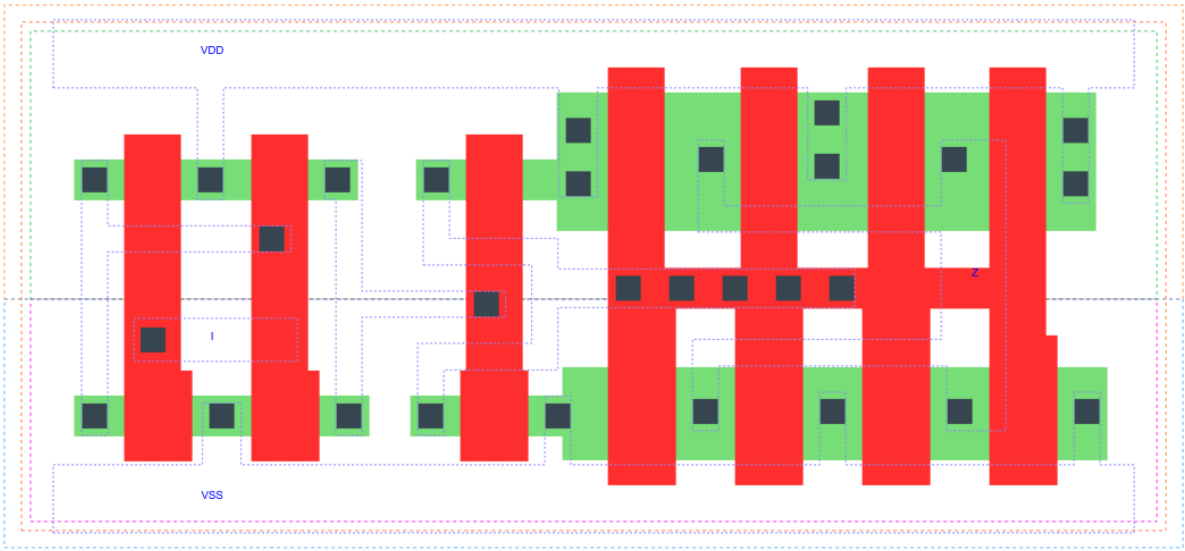

DLYA_X4 is a 2 buffer delay cell, 4X drive strength

Attributes

Attribute	Value
area	37.318400 μm^2

OUTPUT FUNCTIONS

Output Pin	Function
Z	I

TRUTH TABLE FOR Z

I	Z
1	1
0	0

FUNCTIONAL SCHEMATIC

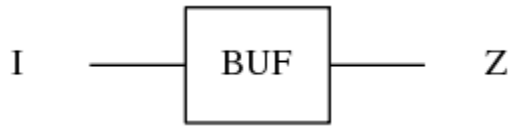

PIN CAPACITANCE (pf)

Pin	Type	Capacitance (pf)
I	input	0.0024

DELAY AND OUTPUT TRANSITION TIME corresponding to min slew and load

Input Pin	Output	When Condition	Tin (ns)	Out Load (pf)	Delay (ns)	Tout (ns)
I(LH)	Z(LH)	default	0.0100	0.0010	0.5440	0.0484
I(HL)	Z(HL)	default	0.0100	0.0010	0.7603	0.0921

DYNAMIC ENERGY

Input Pin	When Condition	Tin (ns)	Output	Out Load (pf)	Energy (uW/MHz)
I	default	0.0100	Z(LH)	0.0010	0.6721
I	default	0.0100	Z(HL)	0.0010	1.2368

LEAKAGE POWER

When Condition	Power (nW)
!I	0.2371
I	0.2313

gf180mcu_fd_sc_mcu7t5v0__dlyb_1

gf180mcu_fd_sc_mcu7t5v0__dlyb_1 symbol

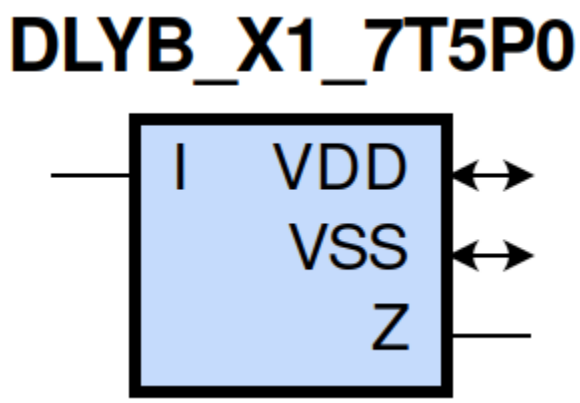

gf180mcu_fd_sc_mcu7t5v0__dlyb_1 schematic

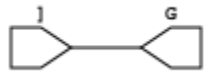

gf180mcu_fd_sc_mcu7t5v0__dlyb_1 layout

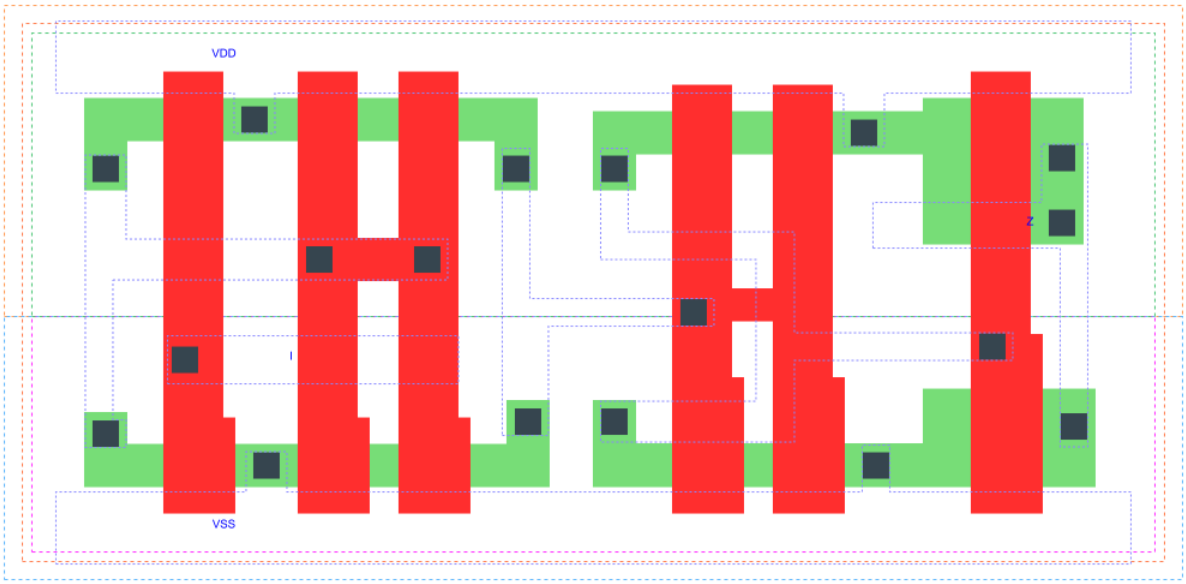

DLYB_X1 is a 4 buffer delay cell, 1X drive strength

Attributes

Attribute	Value
area	35.123200 μm^2

OUTPUT FUNCTIONS

Output Pin	Function
Z	I

TRUTH TABLE FOR Z

I	Z
1	1
0	0

FUNCTIONAL SCHEMATIC

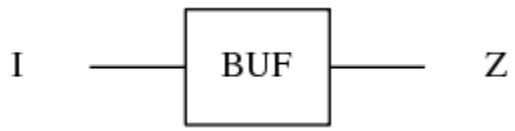

PIN CAPACITANCE (pf)

Pin	Type	Capacitance (pf)
I	input	0.0027

DELAY AND OUTPUT TRANSITION TIME corresponding to min slew and load

Input Pin	Output	When Condition	Tin (ns)	Out Load (pf)	Delay (ns)	Tout (ns)
I(LH)	Z(LH)	default	0.0100	0.0010	0.8170	0.0548
I(HL)	Z(HL)	default	0.0100	0.0010	0.8954	0.0789

DYNAMIC ENERGY

Input Pin	When Condition	Tin (ns)	Output	Out Load (pf)	Energy (uW/MHz)
I	default	0.0100	Z(LH)	0.0010	0.3178
I	default	0.0100	Z(HL)	0.0010	0.4300

LEAKAGE POWER

When Condition	Power (nW)
!I	0.1556
I	0.1530

gf180mcu_fd_sc_mcu7t5v0__dlyb_2

gf180mcu_fd_sc_mcu7t5v0__dlyb_2 symbol

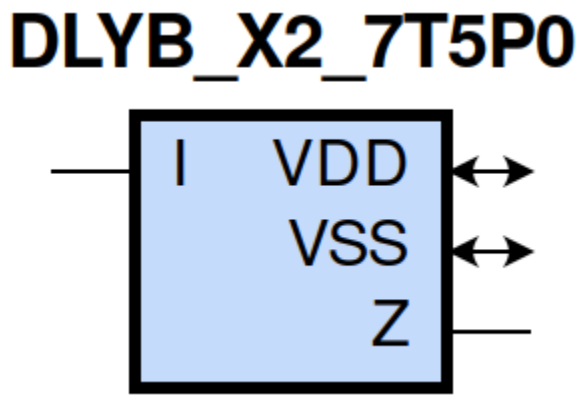

gf180mcu_fd_sc_mcu7t5v0__dlyb_2 schematic

gf180mcu_fd_sc_mcu7t5v0__dlyb_2 layout

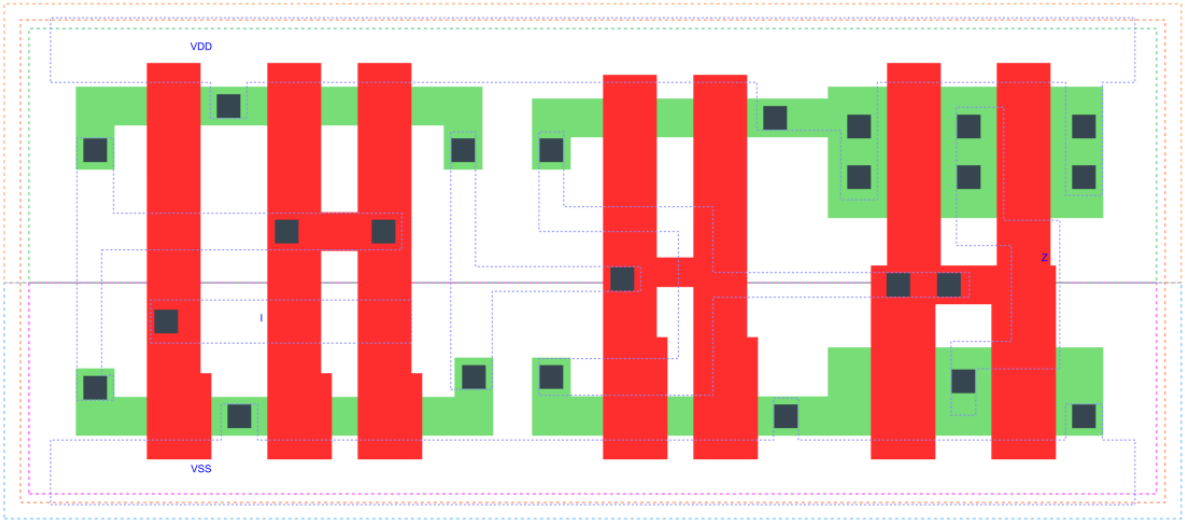

DLYB_X2 is a 4 buffer delay cell, 2X drive strength

Attributes

Attribute	Value
area	39.513600 μm^2

OUTPUT FUNCTIONS

Output Pin	Function
Z	I

TRUTH TABLE FOR Z

I	Z
1	1
0	0

FUNCTIONAL SCHEMATIC

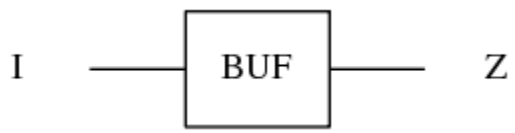

PIN CAPACITANCE (pf)

Pin	Type	Capacitance (pf)
I	input	0.0027

DELAY AND OUTPUT TRANSITION TIME corresponding to min slew and load

Input Pin	Output	When Condition	Tin (ns)	Out Load (pf)	Delay (ns)	Tout (ns)
I(LH)	Z(LH)	default	0.0100	0.0010	0.9087	0.0537
I(HL)	Z(HL)	default	0.0100	0.0010	1.0677	0.0972

DYNAMIC ENERGY

Input Pin	When Condition	Tin (ns)	Output	Out Load (pf)	Energy (uW/MHz)
I	default	0.0100	Z(LH)	0.0010	0.4865
I	default	0.0100	Z(HL)	0.0010	0.7942

LEAKAGE POWER

When Condition	Power (nW)
!I	0.1821
I	0.1784

gf180mcu_fd_sc_mcu7t5v0__dlyb_4

gf180mcu_fd_sc_mcu7t5v0__dlyb_4 symbol

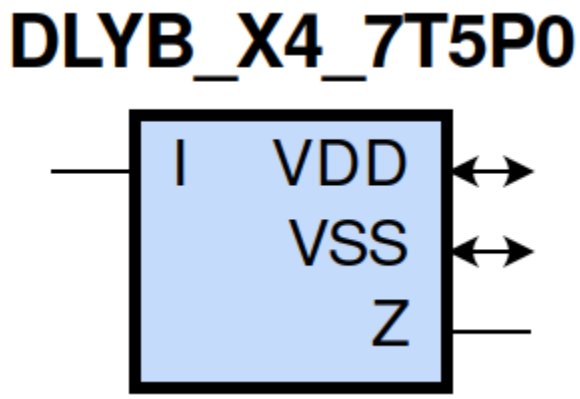

gf180mcu_fd_sc_mcu7t5v0__dlyb_4 schematic

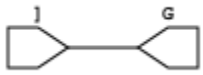

gf180mcu_fd_sc_mcu7t5v0__dlyb_4 layout

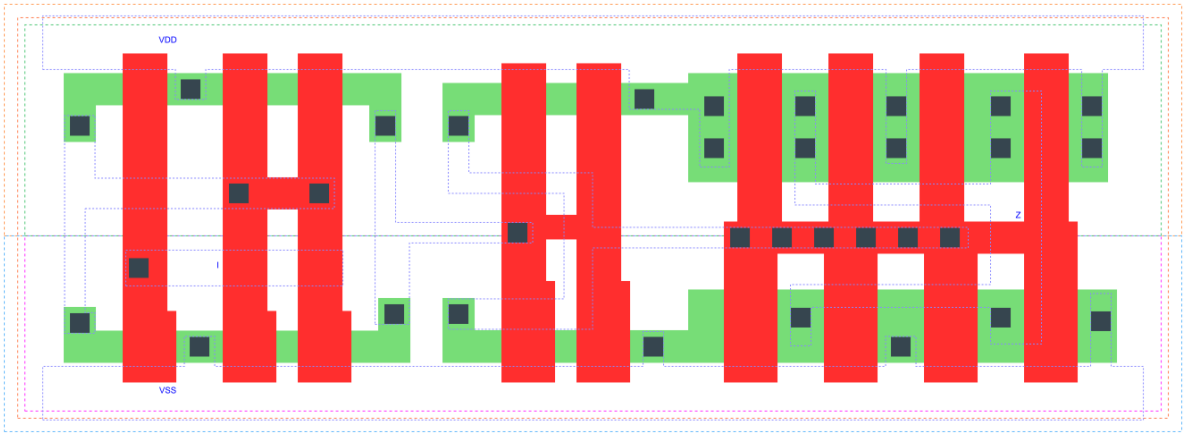

DLYB_X4 is a 4 buffer delay cell, 4X drive strength

Attributes

Attribute	Value
area	48.294400 μm^2

OUTPUT FUNCTIONS

Output Pin	Function
Z	I

TRUTH TABLE FOR Z

I	Z
1	1
0	0

FUNCTIONAL SCHEMATIC

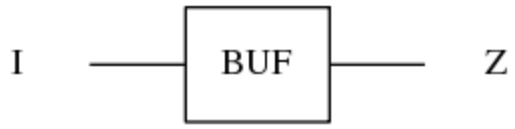

PIN CAPACITANCE (pf)

Pin	Type	Capacitance (pf)
I	input	0.0028

DELAY AND OUTPUT TRANSITION TIME corresponding to min slew and load

Input Pin	Output	When Condition	Tin (ns)	Out Load (pf)	Delay (ns)	Tout (ns)
I(LH)	Z(LH)	default	0.0100	0.0010	1.1058	0.0722
I(HL)	Z(HL)	default	0.0100	0.0010	1.4644	0.1558

DYNAMIC ENERGY

Input Pin	When Condition	Tin (ns)	Output	Out Load (pf)	Energy (uW/MHz)
I	default	0.0100	Z(LH)	0.0010	1.0214
I	default	0.0100	Z(HL)	0.0010	2.0871

LEAKAGE POWER

When Condition	Power (nW)
!I	0.2351
I	0.2293

gf180mcu_fd_sc_mcu7t5v0__dlyc_1

gf180mcu_fd_sc_mcu7t5v0__dlyc_1 symbol

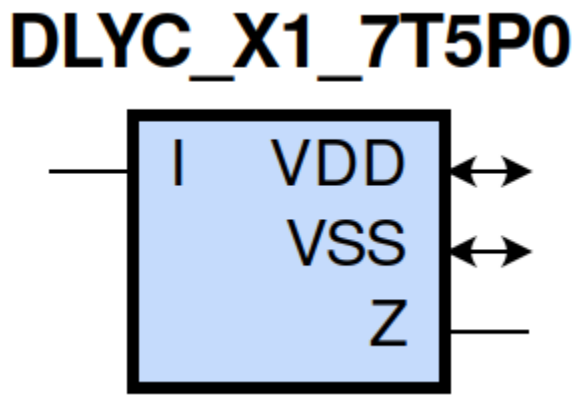

gf180mcu_fd_sc_mcu7t5v0__dlyc_1 schematic

gf180mcu_fd_sc_mcu7t5v0__dlyc_1 layout

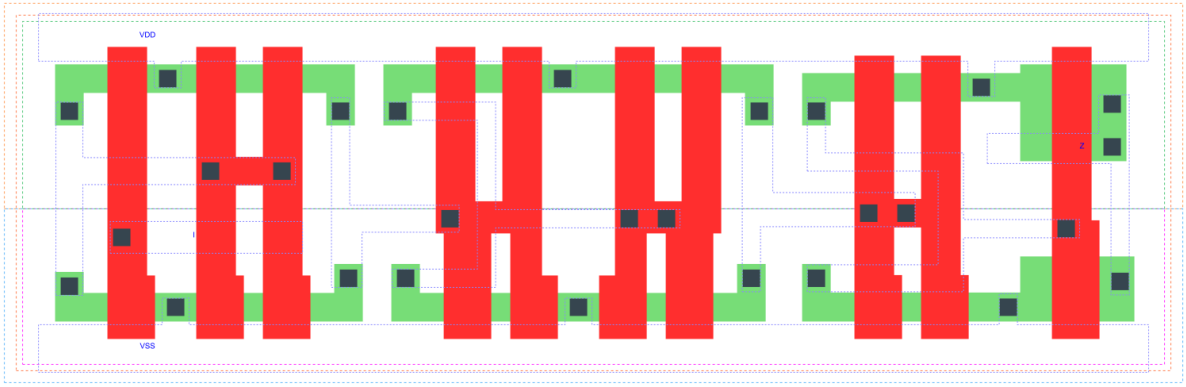

DLYC_X1 is a 8 buffer delay cell, 1X drive strength

Attributes

Attribute	Value
area	54.880000 μm^2

OUTPUT FUNCTIONS

Output Pin	Function
Z	I

TRUTH TABLE FOR Z

I	Z
1	1
0	0

FUNCTIONAL SCHEMATIC

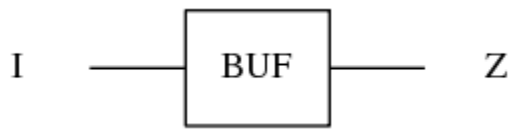

PIN CAPACITANCE (pf)

Pin	Type	Capacitance (pf)
I	input	0.0027

DELAY AND OUTPUT TRANSITION TIME corresponding to min slew and load

Input Pin	Output	When Condition	Tin (ns)	Out Load (pf)	Delay (ns)	Tout (ns)
I(LH)	Z(LH)	default	0.0100	0.0010	1.4978	0.0559
I(HL)	Z(HL)	default	0.0100	0.0010	1.5862	0.0808

DYNAMIC ENERGY

Input Pin	When Condition	Tin (ns)	Output	Out Load (pf)	Energy (uW/MHz)
I	default	0.0100	Z(LH)	0.0010	0.4958
I	default	0.0100	Z(HL)	0.0010	0.6220

LEAKAGE POWER

When Condition	Power (nW)
!I	0.2072
I	0.2045

gf180mcu_fd_sc_mcu7t5v0__dlyc_2

gf180mcu_fd_sc_mcu7t5v0__dlyc_2 symbol

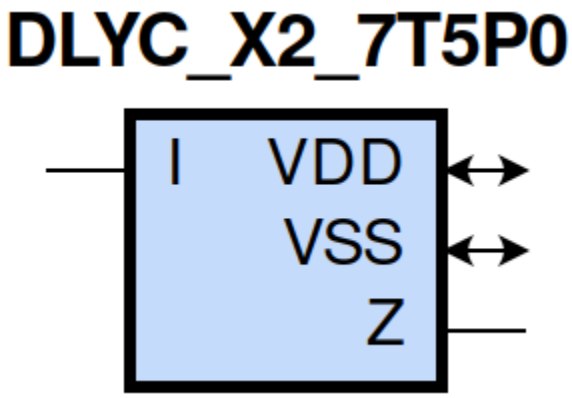

gf180mcu_fd_sc_mcu7t5v0__dlyc_2 schematic

gf180mcu_fd_sc_mcu7t5v0__dlyc_2 layout

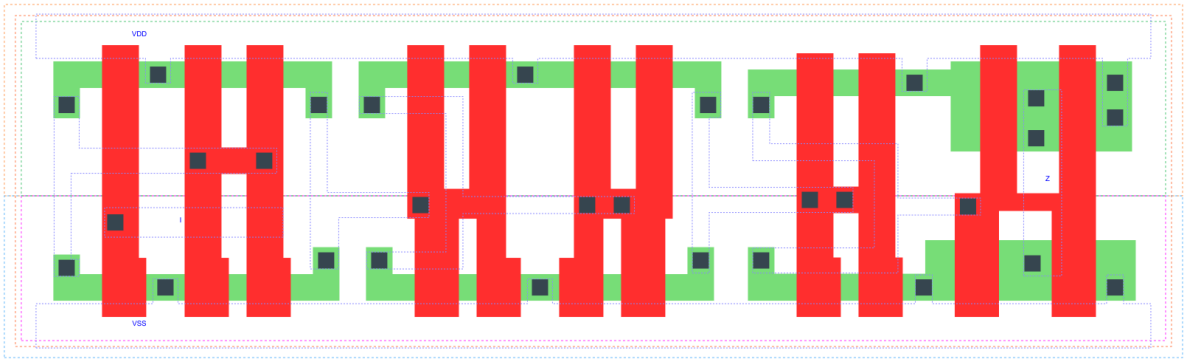

DLYC_X2 is a 8 buffer delay cell, 2X drive strength

Attributes

Attribute	Value
area	59.270400 μm^2

OUTPUT FUNCTIONS

Output Pin	Function
Z	I

TRUTH TABLE FOR Z

I	Z
1	1
0	0

FUNCTIONAL SCHEMATIC

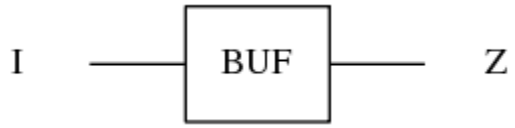

PIN CAPACITANCE (pf)

Pin	Type	Capacitance (pf)
I	input	0.0027

DELAY AND OUTPUT TRANSITION TIME corresponding to min slew and load

Input Pin	Output	When Condition	Tin (ns)	Out Load (pf)	Delay (ns)	Tout (ns)
I(LH)	Z(LH)	default	0.0100	0.0010	1.5797	0.0539
I(HL)	Z(HL)	default	0.0100	0.0010	1.7454	0.0975

DYNAMIC ENERGY

Input Pin	When Condition	Tin (ns)	Output	Out Load (pf)	Energy (uW/MHz)
I	default	0.0100	Z(LH)	0.0010	0.6596
I	default	0.0100	Z(HL)	0.0010	0.9818

LEAKAGE POWER

When Condition	Power (nW)
!I	0.2337
I	0.2300

gf180mcu_fd_sc_mcu7t5v0__dlyc_4

gf180mcu_fd_sc_mcu7t5v0__dlyc_4 symbol

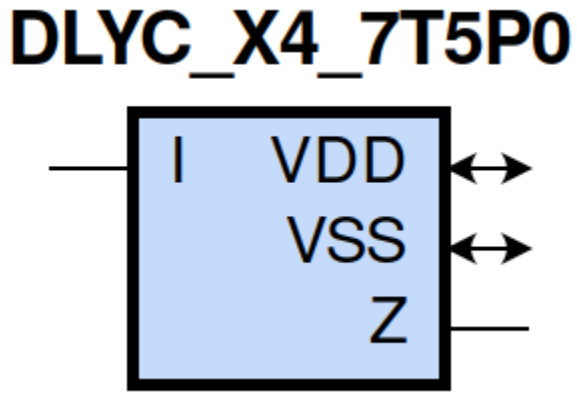

gf180mcu_fd_sc_mcu7t5v0__dlyc_4 schematic

gf180mcu_fd_sc_mcu7t5v0__dlyc_4 layout

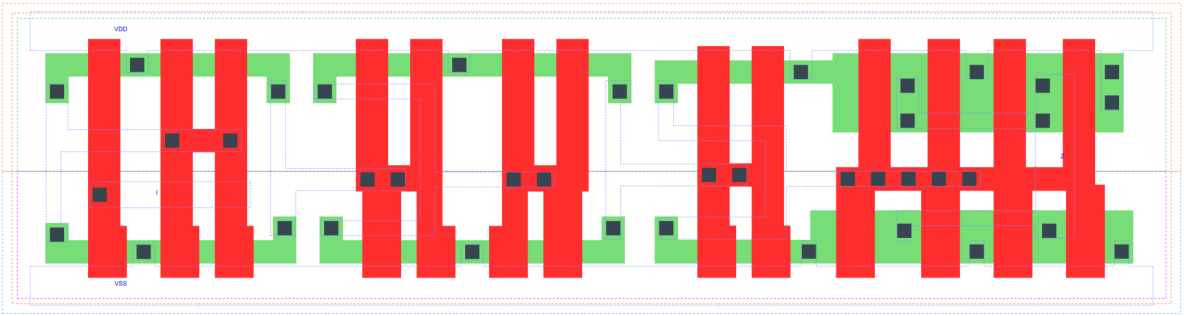

DLYC_X4 is a 8 buffer delay cell, 4X drive strength

Attributes

Attribute	Value
area	68.051200 μm^2

OUTPUT FUNCTIONS

Output Pin	Function
Z	I

TRUTH TABLE FOR Z

I	Z
1	1
0	0

FUNCTIONAL SCHEMATIC

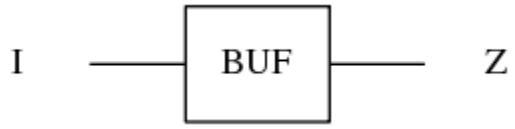

PIN CAPACITANCE (pf)

Pin	Type	Capacitance (pf)
I	input	0.0028

DELAY AND OUTPUT TRANSITION TIME corresponding to min slew and load

Input Pin	Output	When Condition	Tin (ns)	Out Load (pf)	Delay (ns)	Tout (ns)
I(LH)	Z(LH)	default	0.0100	0.0010	1.7645	0.0706
I(HL)	Z(HL)	default	0.0100	0.0010	2.1223	0.1541

DYNAMIC ENERGY

Input Pin	When Condition	Tin (ns)	Output	Out Load (pf)	Energy (uW/MHz)
I	default	0.0100	Z(LH)	0.0010	1.1863
I	default	0.0100	Z(HL)	0.0010	2.2542

LEAKAGE POWER

When Condition	Power (nW)
!I	0.2866
I	0.2809

gf180mcu_fd_sc_mcu7t5v0__dlyd_1

gf180mcu_fd_sc_mcu7t5v0__dlyd_1 symbol

DLYD_X1_7T5P0

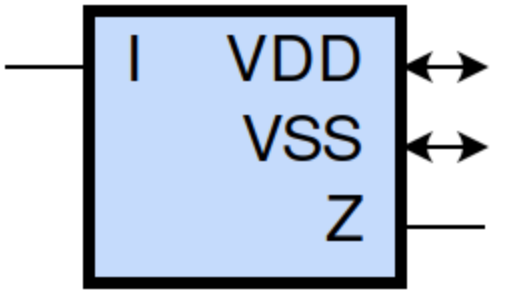

gf180mcu_fd_sc_mcu7t5v0__dlyd_1 schematic

gf180mcu_fd_sc_mcu7t5v0__dlyd_1 layout

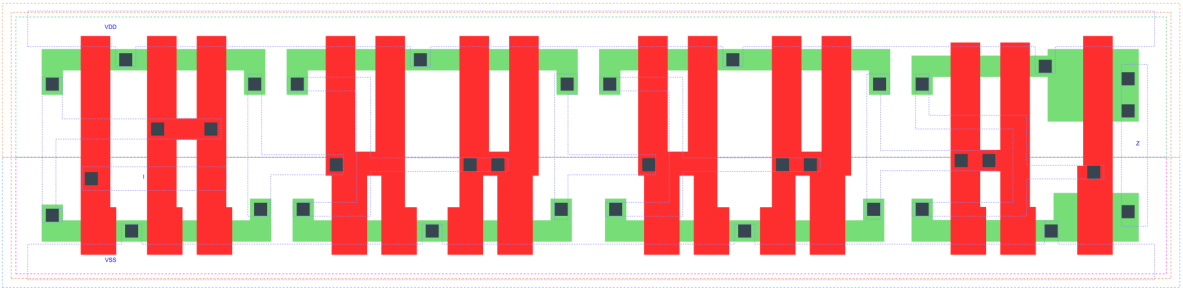

DLYD_X1 is a 16 buffer delay cell, 1X drive strength

Attributes

Attribute	Value
area	74.636800 μm^2

OUTPUT FUNCTIONS

Output Pin	Function
Z	I

TRUTH TABLE FOR Z

I	Z
1	1
0	0

FUNCTIONAL SCHEMATIC

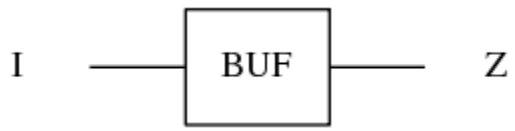

PIN CAPACITANCE (pf)

Pin	Type	Capacitance (pf)
I	input	0.0027

DELAY AND OUTPUT TRANSITION TIME corresponding to min slew and load

Input Pin	Output	When Condition	Tin (ns)	Out Load (pf)	Delay (ns)	Tout (ns)
I(LH)	Z(LH)	default	0.0100	0.0010	2.1522	0.0539
I(HL)	Z(HL)	default	0.0100	0.0010	2.2427	0.0780

DYNAMIC ENERGY

Input Pin	When Condition	Tin (ns)	Output	Out Load (pf)	Energy (uW/MHz)
I	default	0.0100	Z(LH)	0.0010	0.6631
I	default	0.0100	Z(HL)	0.0010	0.7937

LEAKAGE POWER

When Condition	Power (nW)
!I	0.2587
I	0.2561

gf180mcu_fd_sc_mcu7t5v0__dlyd_2

gf180mcu_fd_sc_mcu7t5v0__dlyd_2 symbol

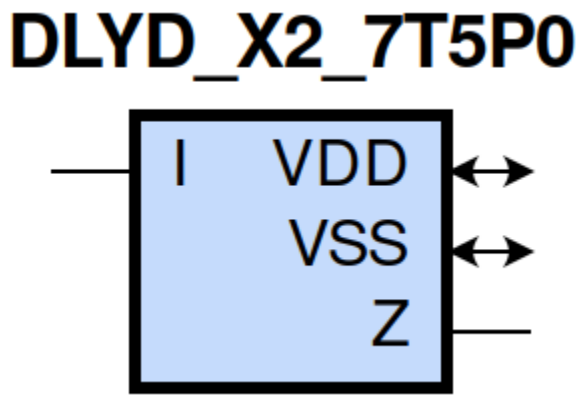

gf180mcu_fd_sc_mcu7t5v0__dlyd_2 schematic

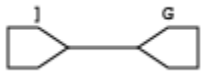

gf180mcu_fd_sc_mcu7t5v0__dlyd_2 layout

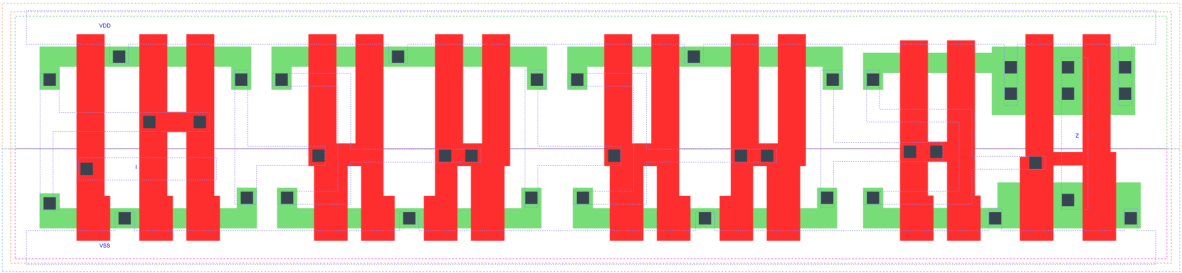

DLYD_X2 is a 16 buffer delay cell, 2X drive strength

Attributes

Attribute	Value
area	79.027200 μm^2

OUTPUT FUNCTIONS

Output Pin	Function
Z	I

TRUTH TABLE FOR Z

I	Z
1	1
0	0

FUNCTIONAL SCHEMATIC

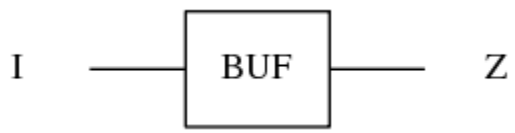

PIN CAPACITANCE (pf)

Pin	Type	Capacitance (pf)
I	input	0.0028

DELAY AND OUTPUT TRANSITION TIME corresponding to min slew and load

Input Pin	Output	When Condition	Tin (ns)	Out Load (pf)	Delay (ns)	Tout (ns)
I(LH)	Z(LH)	default	0.0100	0.0010	2.2425	0.0525
I(HL)	Z(HL)	default	0.0100	0.0010	2.4108	0.0959

DYNAMIC ENERGY

Input Pin	When Condition	Tin (ns)	Output	Out Load (pf)	Energy (uW/MHz)
I	default	0.0100	Z(LH)	0.0010	0.8305
I	default	0.0100	Z(HL)	0.0010	1.1565

LEAKAGE POWER

When Condition	Power (nW)
!I	0.2852
I	0.2815

gf180mcu_fd_sc_mcu7t5v0__dlyd_4

gf180mcu_fd_sc_mcu7t5v0__dlyd_4 symbol

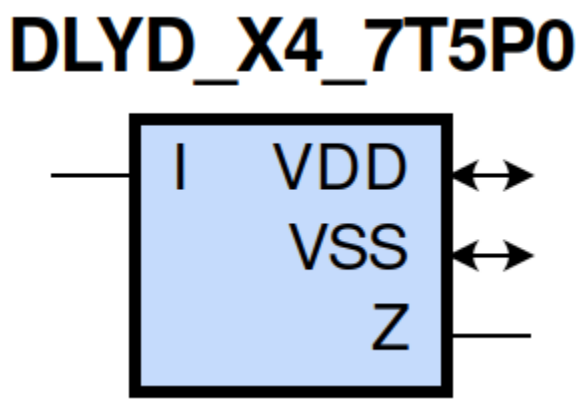

gf180mcu_fd_sc_mcu7t5v0__dlyd_4 schematic

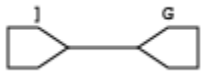

gf180mcu_fd_sc_mcu7t5v0__dlyd_4 layout

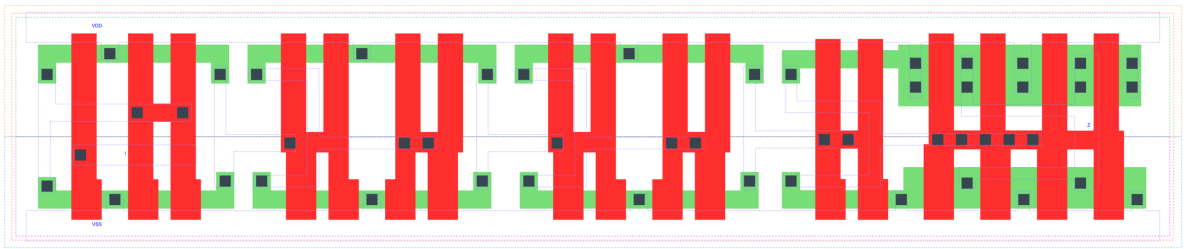

DLYD_X4 is a 16 buffer delay cell, 4X drive strength

Attributes

Attribute	Value
area	87.808000 μm^2

OUTPUT FUNCTIONS

Output Pin	Function
Z	I

TRUTH TABLE FOR Z

I	Z
1	1
0	0

FUNCTIONAL SCHEMATIC

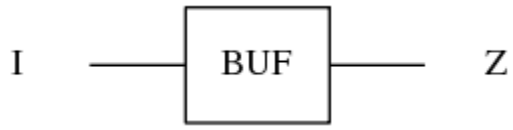

PIN CAPACITANCE (pf)

Pin	Type	Capacitance (pf)
I	input	0.0027

DELAY AND OUTPUT TRANSITION TIME corresponding to min slew and load

Input Pin	Output	When Condition	Tin (ns)	Out Load (pf)	Delay (ns)	Tout (ns)
I(LH)	Z(LH)	default	0.0100	0.0010	2.4366	0.0711
I(HL)	Z(HL)	default	0.0100	0.0010	2.7996	0.1536

DYNAMIC ENERGY

Input Pin	When Condition	Tin (ns)	Output	Out Load (pf)	Energy (uW/MHz)
I	default	0.0100	Z(LH)	0.0010	1.3633
I	default	0.0100	Z(HL)	0.0010	2.4343

LEAKAGE POWER

When Condition	Power (nW)
!I	0.3382
I	0.3324

gf180mcu_fd_sc_mcu7t5v0__endcap

gf180mcu_fd_sc_mcu7t5v0__endcap symbol

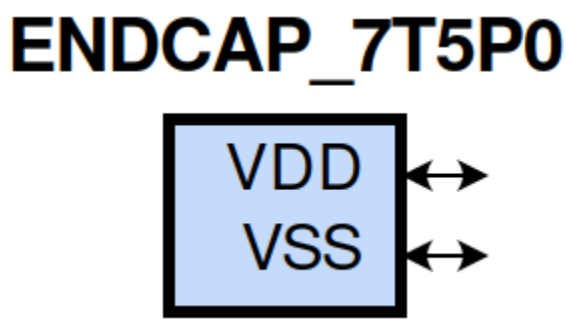

gf180mcu_fd_sc_mcu7t5v0__endcap schematic

gf180mcu_fd_sc_mcu7t5v0__endcap layout

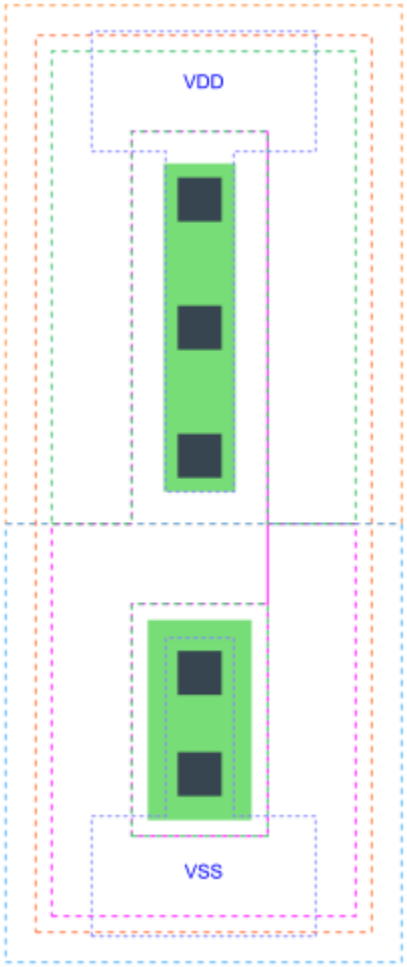

ENDCAP is a row end closure cell

Attributes

Attribute	Value
area	4.390400 μm^2

FUNCTIONAL SCHEMATIC

COMB

LEAKAGE POWER

When Condition	Power (nW)
default	0.0500

gf180mcu_fd_sc_mcu7t5v0__fill_1

gf180mcu_fd_sc_mcu7t5v0__fill_1 symbol

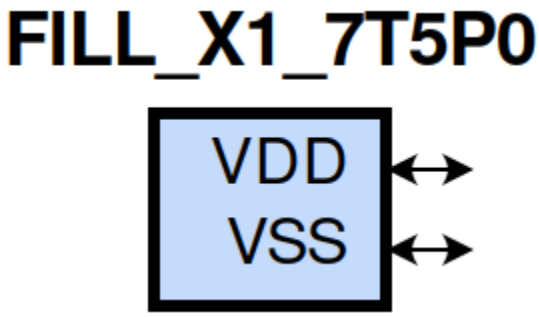

gf180mcu_fd_sc_mcu7t5v0__fill_1 schematic

gf180mcu_fd_sc_mcu7t5v0__fill_1 layout

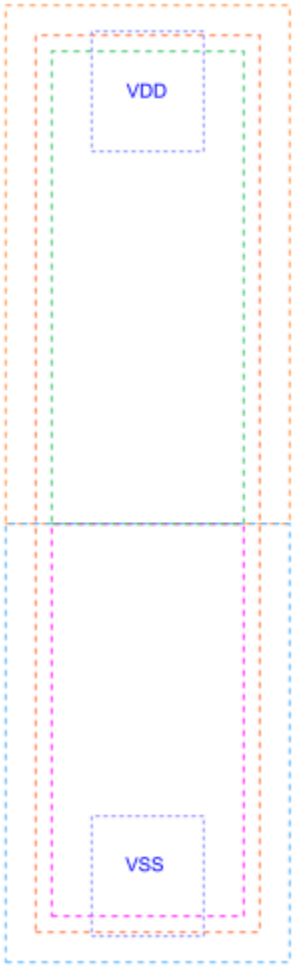

FILL_X1 is a filler whose cell width is 0.56um

Attributes

Attribute	Value
area	2.195200 μm^2

FUNCTIONAL SCHEMATIC

COMB

LEAKAGE POWER

When Condition	Power (nW)
default	0.0500

gf180mcu_fd_sc_mcu7t5v0__fill_x16

gf180mcu_fd_sc_mcu7t5v0__fill_x16 symbol

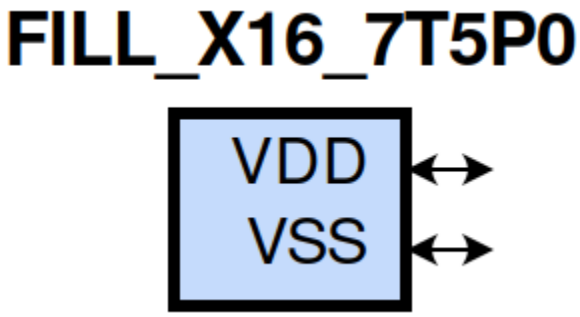

gf180mcu_fd_sc_mcu7t5v0__fill_x16 schematic

gf180mcu_fd_sc_mcu7t5v0__fill_x16 layout

FILL_X16 is a filler whose cell width is 8.96um

Attributes

Attribute	Value
area	35.123200 μm^2

FUNCTIONAL SCHEMATIC

LEAKAGE POWER

When Condition	Power (nW)
default	0.0500

gf180mcu_fd_sc_mcu7t5v0__fill_2

gf180mcu_fd_sc_mcu7t5v0__fill_2 symbol

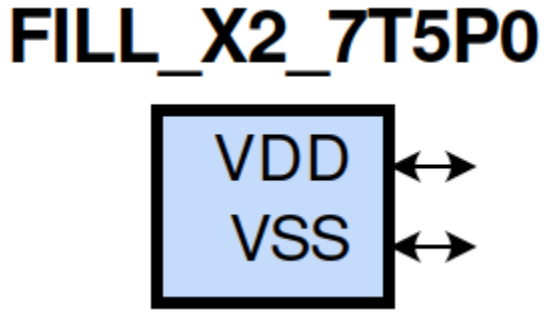

gf180mcu_fd_sc_mcu7t5v0__fill_2 schematic

gf180mcu_fd_sc_mcu7t5v0__fill_2 layout

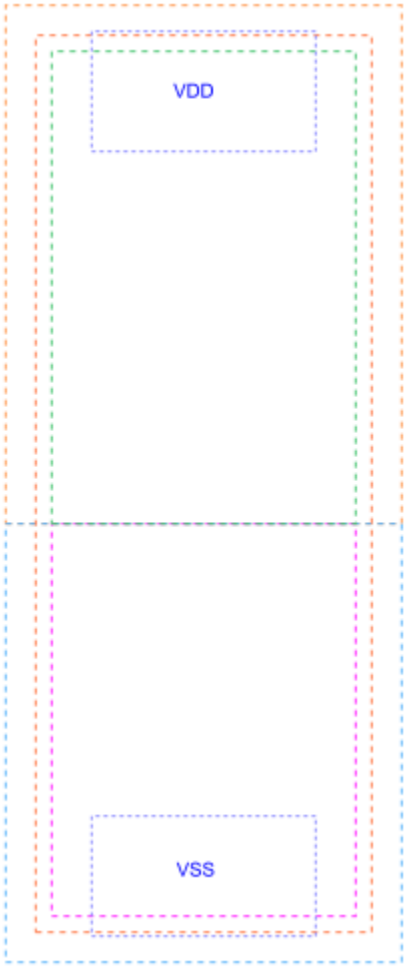

FILL_X2 is a filler whose cell width is is 1.12um

Attributes

Attribute	Value
area	4.390400 μm^2

FUNCTIONAL SCHEMATIC

COMB

LEAKAGE POWER

When Condition	Power (nW)
default	0.0500

gf180mcu_fd_sc_mcu7t5v0__fill_x32

gf180mcu_fd_sc_mcu7t5v0__fill_x32 symbol

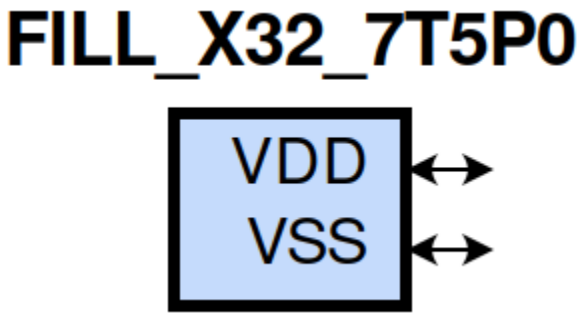

gf180mcu_fd_sc_mcu7t5v0__fill_x32 schematic

gf180mcu_fd_sc_mcu7t5v0__fill_x32 layout

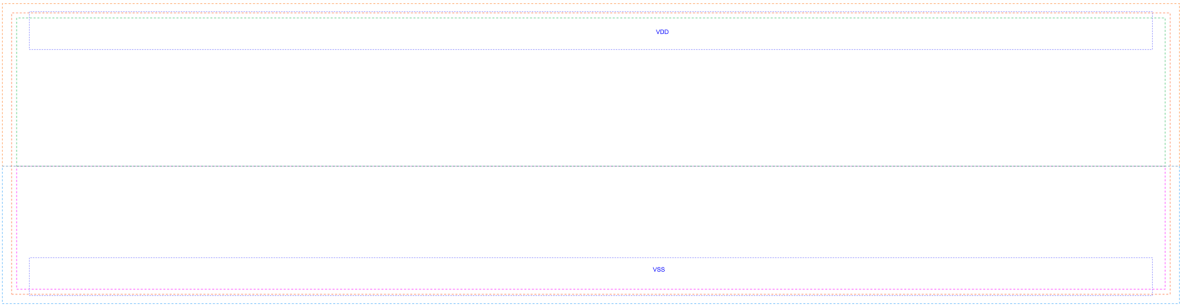

FILL_X32 is a filler whose cell width is 17.92um

Attributes

Attribute	Value
area	70.246400 μm^2

FUNCTIONAL SCHEMATIC

LEAKAGE POWER

When Condition	Power (nW)
default	0.0500

gf180mcu_fd_sc_mcu7t5v0__fill_4

gf180mcu_fd_sc_mcu7t5v0__fill_4 symbol

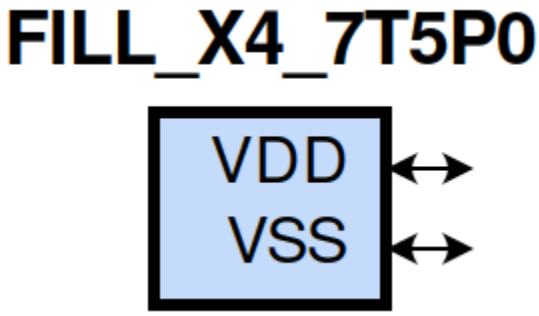

gf180mcu_fd_sc_mcu7t5v0__fill_4 schematic

gf180mcu_fd_sc_mcu7t5v0__fill_4 layout

FILL_X4 is a filler whose cell width is 2.24um

Attributes

Attribute	Value
area	8.780800 μm^2

FUNCTIONAL SCHEMATIC

LEAKAGE POWER

When Condition	Power (nW)
default	0.0500

gf180mcu_fd_sc_mcu7t5v0__fill_x64

gf180mcu_fd_sc_mcu7t5v0__fill_x64 symbol

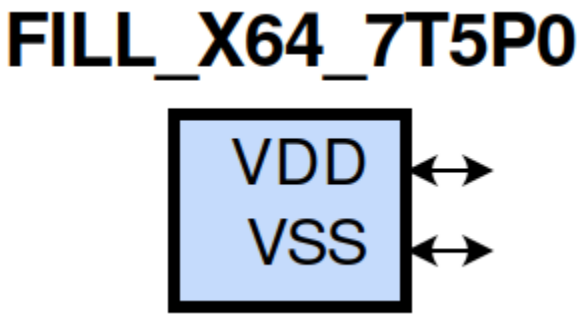

gf180mcu_fd_sc_mcu7t5v0__fill_x64 schematic

gf180mcu_fd_sc_mcu7t5v0__fill_x64 layout

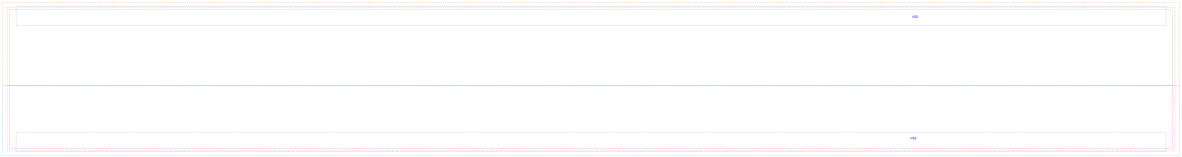

FILL_X64 is a filler whose cell width is 35.84um

Attributes

Attribute	Value
area	140.492800 μm^2

FUNCTIONAL SCHEMATIC

LEAKAGE POWER

When Condition	Power (nW)
default	0.0500

gf180mcu_fd_sc_mcu7t5v0__fill_8

gf180mcu_fd_sc_mcu7t5v0__fill_8 symbol

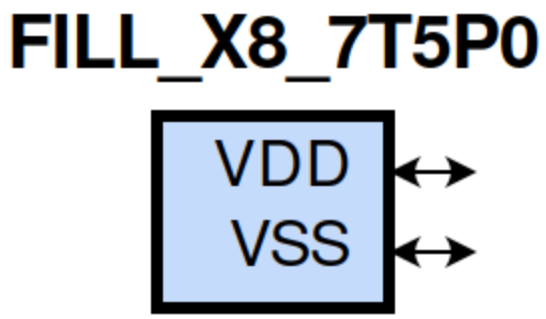

gf180mcu_fd_sc_mcu7t5v0__fill_8 schematic

gf180mcu_fd_sc_mcu7t5v0__fill_8 layout

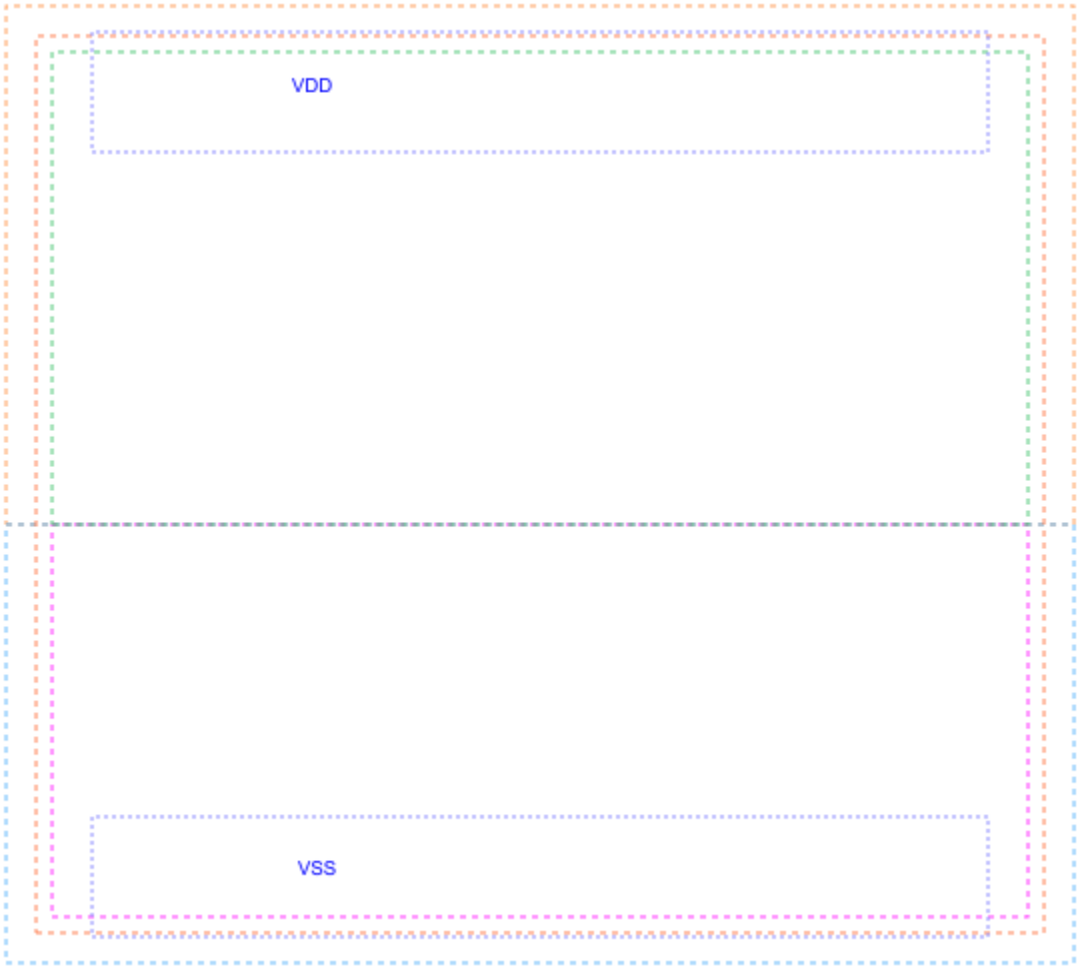

FILL_X8 is a filler whose cell width is 4.48um

Attributes

Attribute	Value
area	17.561600 μm^2

FUNCTIONAL SCHEMATIC

COMB

LEAKAGE POWER

When Condition	Power (nW)
default	0.0500

gf180mcu_fd_sc_mcu7t5v0__fillcap_x16

gf180mcu_fd_sc_mcu7t5v0__fillcap_x16 symbol

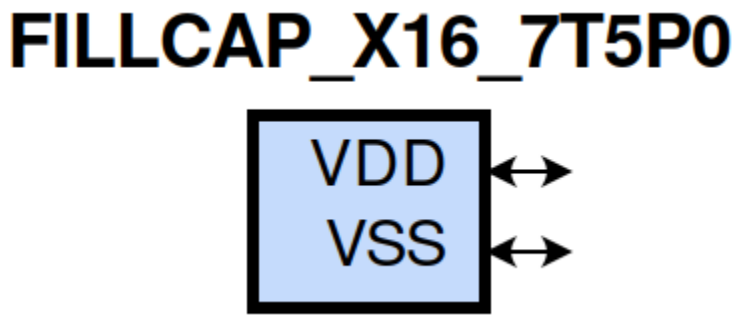

gf180mcu_fd_sc_mcu7t5v0__fillcap_x16 schematic

gf180mcu_fd_sc_mcu7t5v0__fillcap_x16 layout

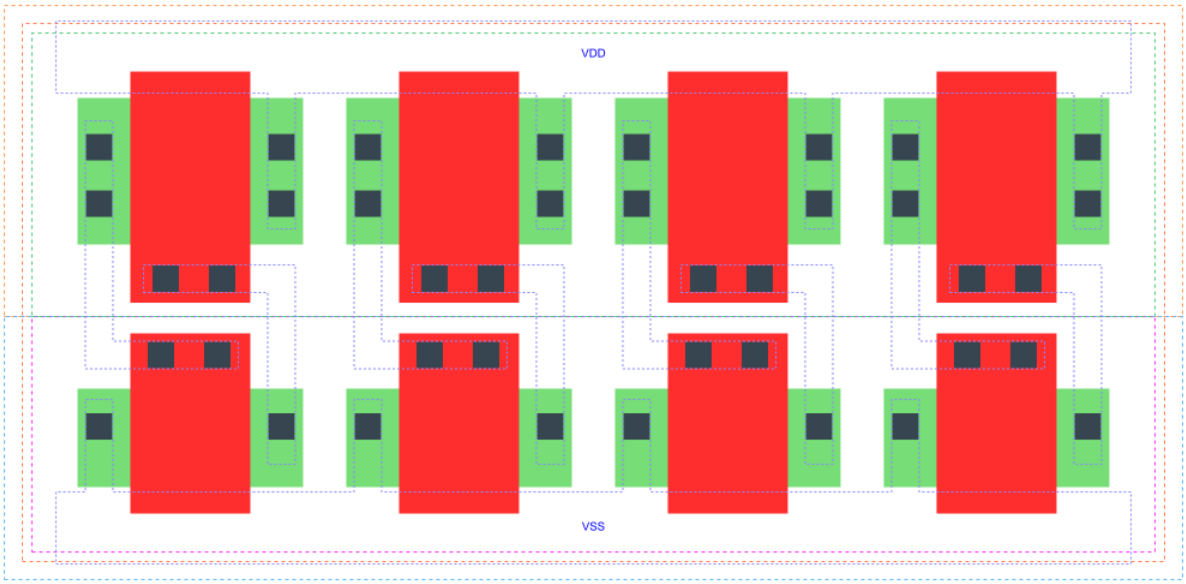

FILLCAP_X16 is a filler whose cell width is 8.96um with decoupling cap between VDD and VSS

Attributes

Attribute	Value
area	35.123200 μm^2

FUNCTIONAL SCHEMATIC

LEAKAGE POWER

When Condition	Power (nW)
default	0.0500

gf180mcu_fd_sc_mcu7t5v0__fillcap_x32

gf180mcu_fd_sc_mcu7t5v0__fillcap_x32 symbol

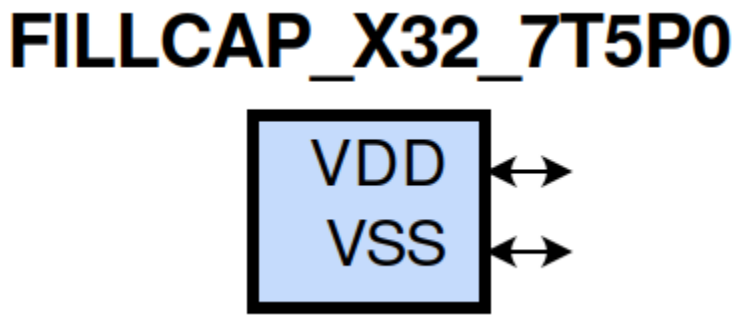

gf180mcu_fd_sc_mcu7t5v0__fillcap_x32 schematic

gf180mcu_fd_sc_mcu7t5v0__fillcap_x32 layout

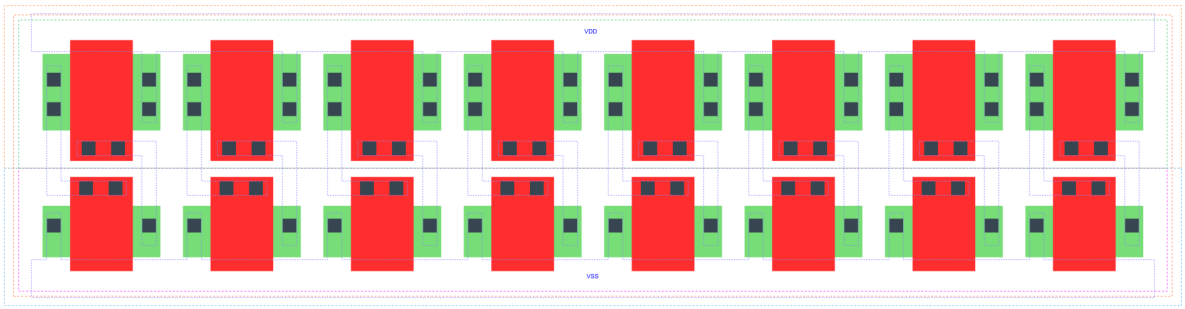

FILLCAP_X32 is a filler whose cell width is 17.92um with decoupling cap between VDD and VSS

Attributes

Attribute	Value
area	70.246400 μm^2

FUNCTIONAL SCHEMATIC

LEAKAGE POWER

When Condition	Power (nW)
default	0.0500

gf180mcu_fd_sc_mcu7t5v0__fillcap_4

gf180mcu_fd_sc_mcu7t5v0__fillcap_4 symbol

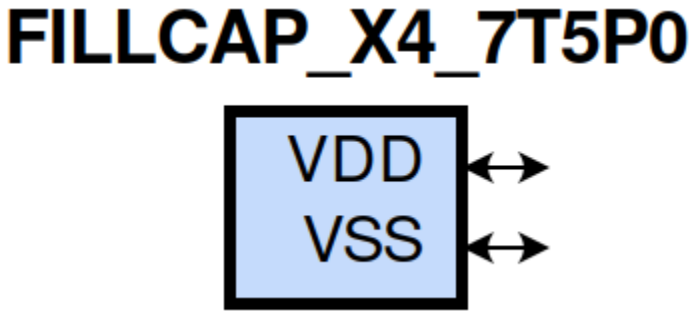

gf180mcu_fd_sc_mcu7t5v0__fillcap_4 schematic

gf180mcu_fd_sc_mcu7t5v0__fillcap_4 layout

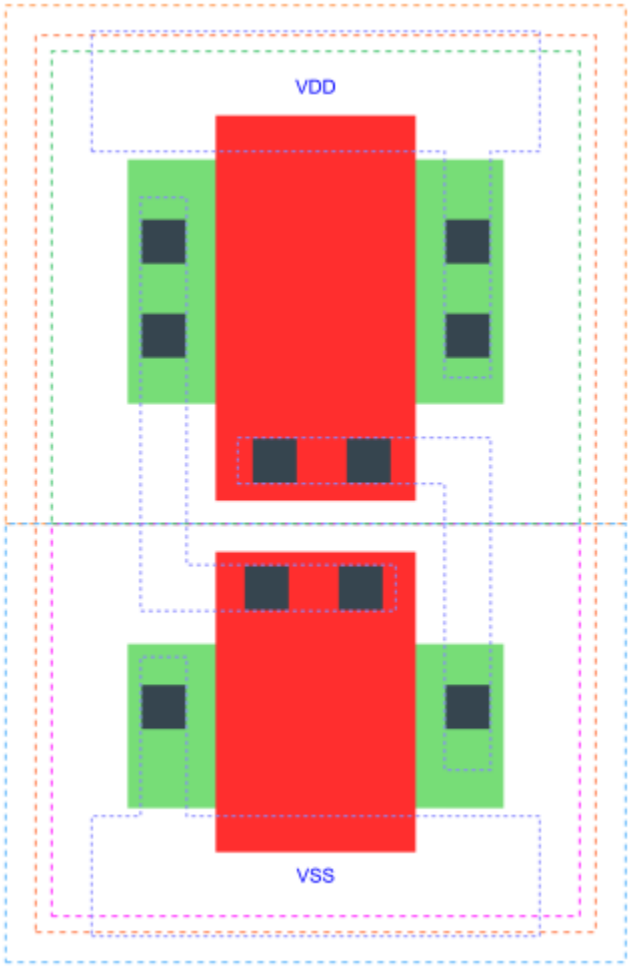

FILLCAP_X4 is a filler whose cell width is 2.24um with decoupling cap between VDD and VSS

Attributes

Attribute	Value
area	8.780800 μm^2

FUNCTIONAL SCHEMATIC

COMB

LEAKAGE POWER

When Condition	Power (nW)
default	0.0500

gf180mcu_fd_sc_mcu7t5v0__fillcap_x64

gf180mcu_fd_sc_mcu7t5v0__fillcap_x64 symbol

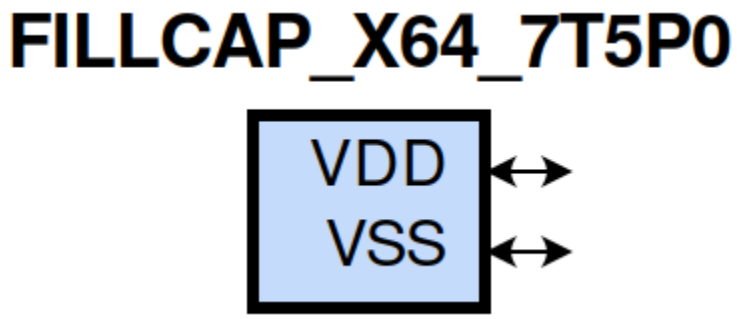

gf180mcu_fd_sc_mcu7t5v0__fillcap_x64 schematic

gf180mcu_fd_sc_mcu7t5v0__fillcap_x64 layout

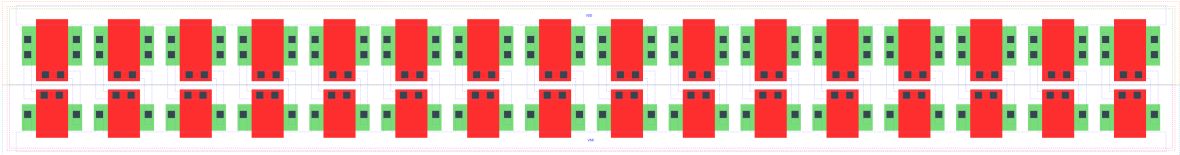

FILLCAP_X64 is a filler whose cell width is 35.84um with decoupling cap between VDD and VSS

Attributes

Attribute	Value
area	140.492800 μm^2

FUNCTIONAL SCHEMATIC

LEAKAGE POWER

When Condition	Power (nW)
default	0.0500

gf180mcu_fd_sc_mcu7t5v0__fillcap_8

gf180mcu_fd_sc_mcu7t5v0__fillcap_8 symbol

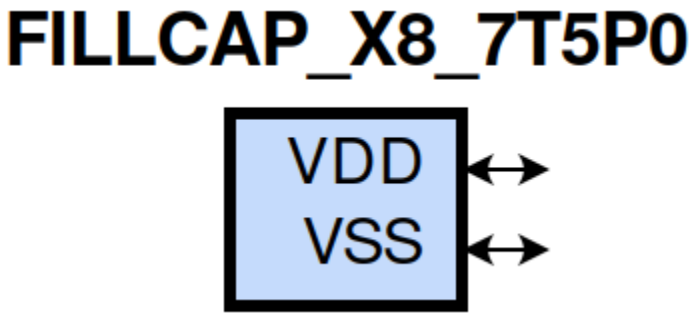

gf180mcu_fd_sc_mcu7t5v0__fillcap_8 schematic

gf180mcu_fd_sc_mcu7t5v0__fillcap_8 layout

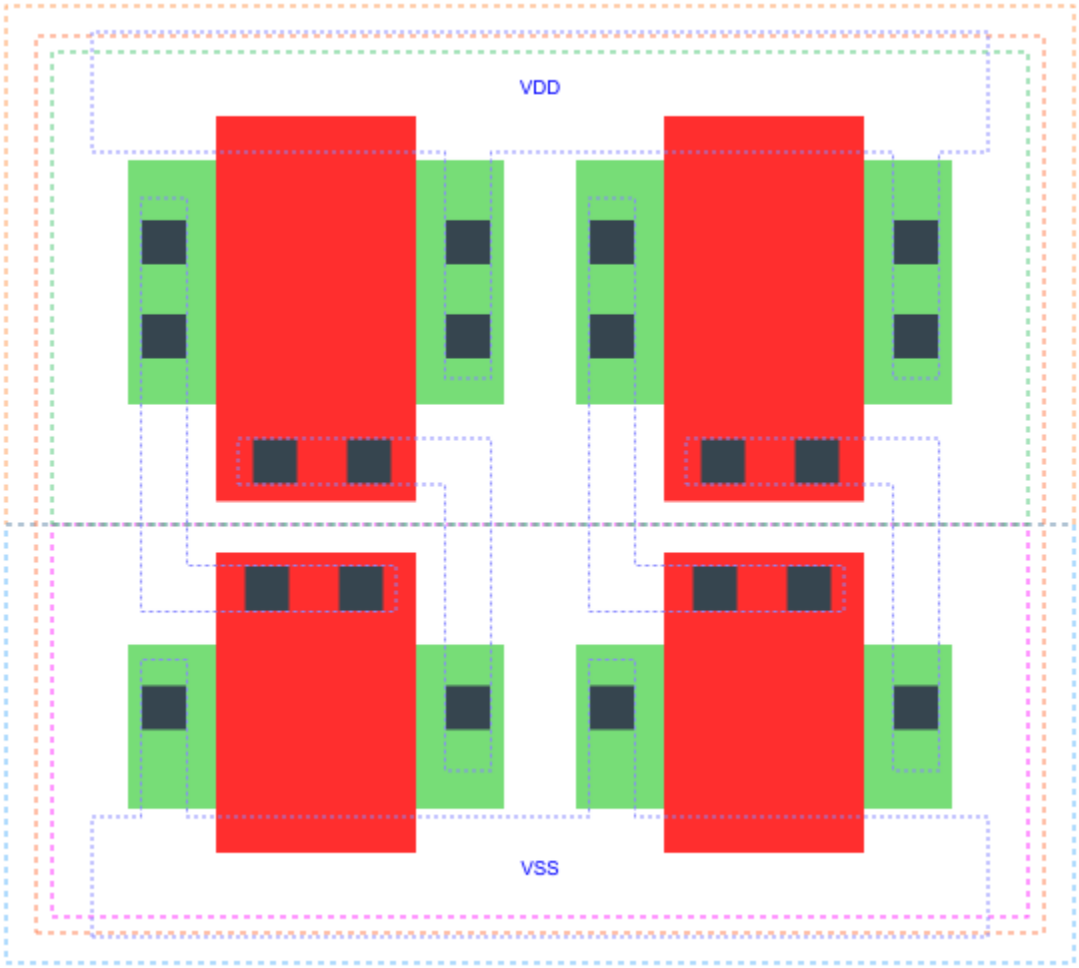

FILLCAP_X8 is a filler whose width is 4.48um with decoupling cap between VDD and VSS

Attributes

Attribute	Value
area	17.561600 μm^2

FUNCTIONAL SCHEMATIC

COMB

LEAKAGE POWER

When Condition	Power (nW)
default	0.0500

gf180mcu_fd_sc_mcu7t5v0__filltie

gf180mcu_fd_sc_mcu7t5v0__filltie symbol

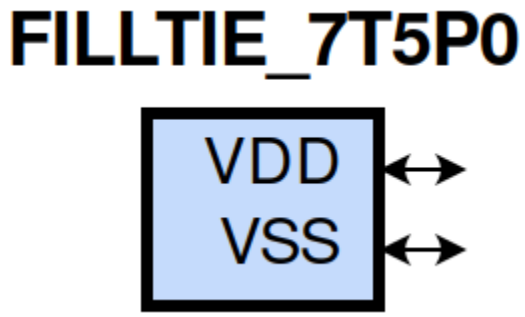

gf180mcu_fd_sc_mcu7t5v0__filltie schematic

gf180mcu_fd_sc_mcu7t5v0__filltie layout

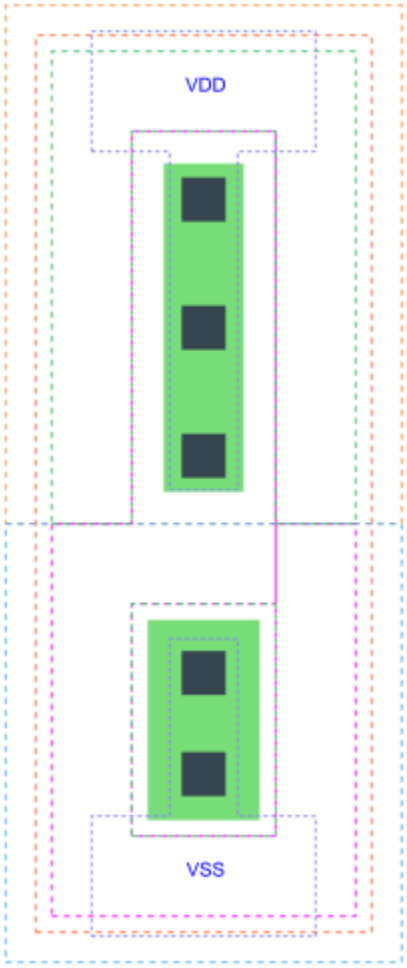

FILLTIE is a filler with well and substrate tap

Attributes

Attribute	Value
area	4.390400 μm^2

FUNCTIONAL SCHEMATIC

COMB

LEAKAGE POWER

When Condition	Power (nW)
default	0.0500

gf180mcu_fd_sc_mcu7t5v0__hold

gf180mcu_fd_sc_mcu7t5v0__hold symbol

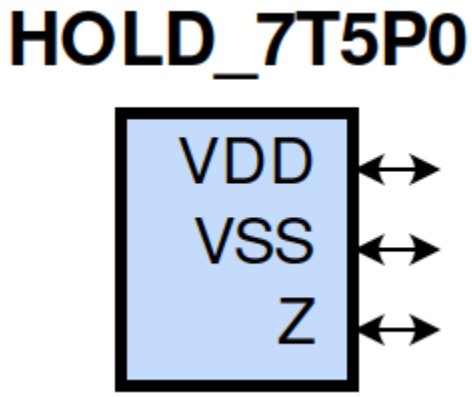

gf180mcu_fd_sc_mcu7t5v0__hold schematic

gf180mcu_fd_sc_mcu7t5v0__hold layout

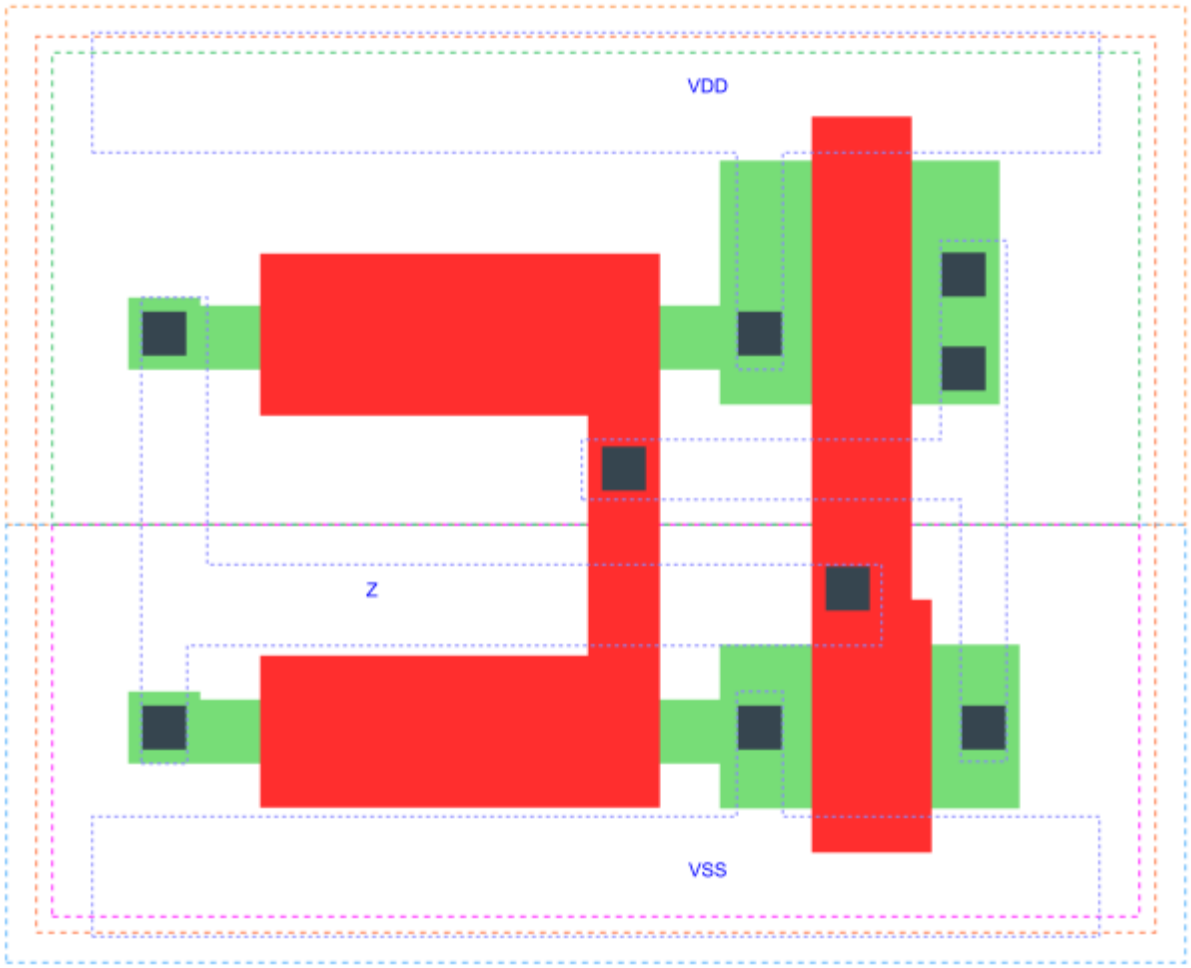

HOLD is a state holder cell

Attributes

Attribute	Value
area	bus_hold µm^2
area	19.756800 µm^2

OUTPUT FUNCTIONS

Output Pin	Function
Z	Z

TRUTH TABLE FOR Z

Z

FUNCTIONAL SCHEMATIC

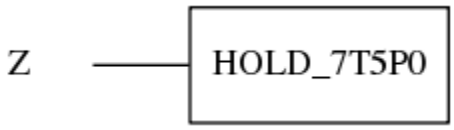

PIN CAPACITANCE (pf)

Pin	Type	Capacitance (pf)
Z	inout	0.0177

DYNAMIC ENERGY

Input Pin	When Condition	Tin (ns)	Energy (uW/MHz)
Z(HL)	default	0.0100	0.1988
Z(LH)	default	0.0100	0.0034

LEAKAGE POWER

When Condition	Power (nW)
!Z	0.1008
Z	0.1008

gf180mcu_fd_sc_mcu7t5v0__icgtn_1

gf180mcu_fd_sc_mcu7t5v0__icgtn_1 symbol

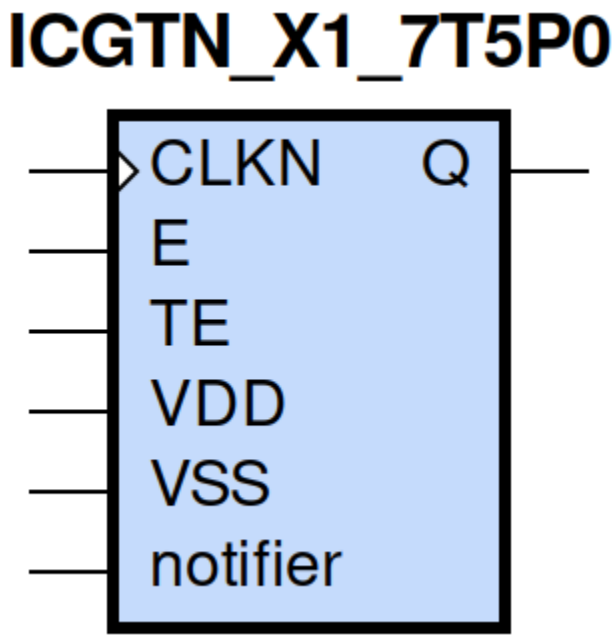

gf180mcu_fd_sc_mcu7t5v0__icgtn_1 schematic

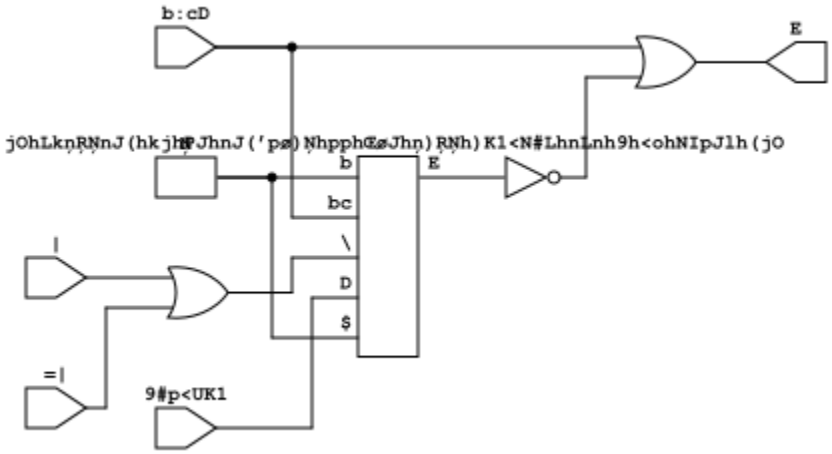

gf180mcu_fd_sc_mcu7t5v0__icgtn_1 layout

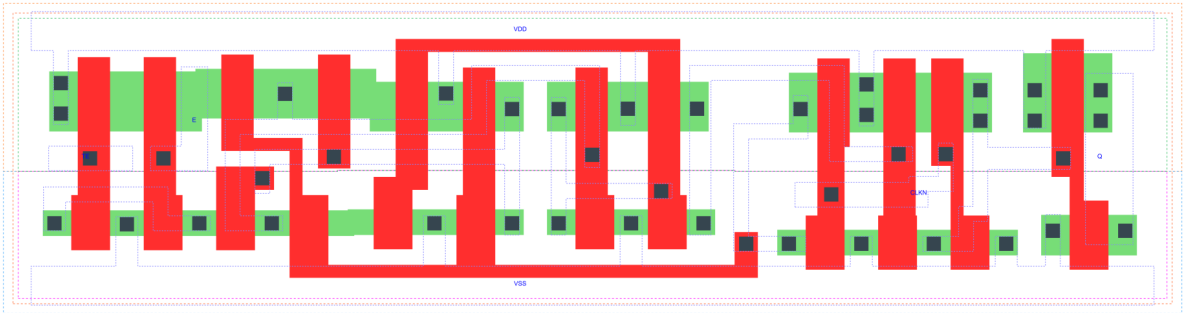

ICGTN_X1 is a negative-edge triggered clock-gating latch, 1X drive strength

Attributes

Attribute	Value
area	true µm^2
area	true µm^2
area	68.051200 µm^2
area	true µm^2
area	latch_negedge_precontrol µm^2
area	true µm^2

TRUTH TABLE

TE	E	CLKN	QDN(n+1)	Q(n+1)
L	L	H	H	H
L	H	H	L	H
H	L	H	L	H
H	H	H	L	H
X	X	L	QDN(n)	QDN(n)

FUNCTIONAL SCHEMATIC

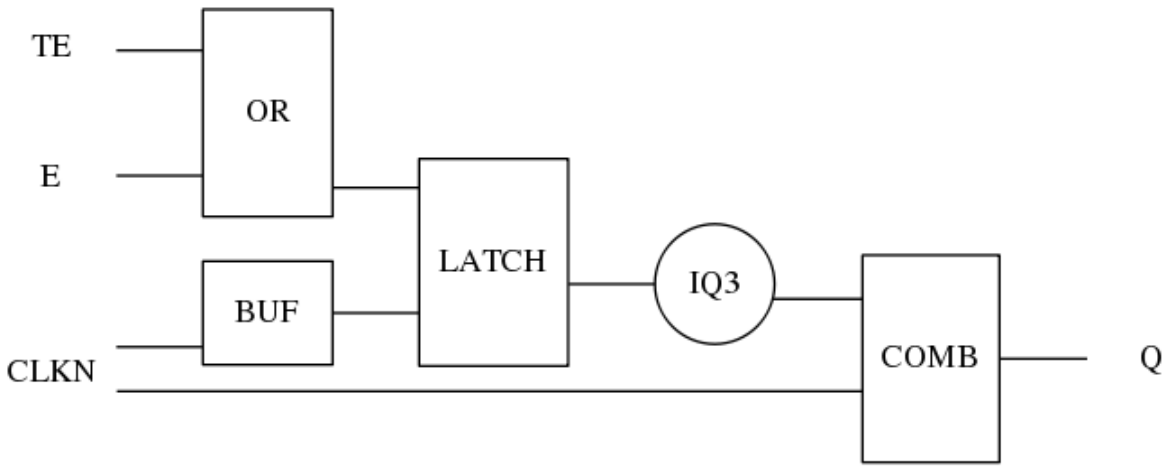

CONSTRAINTS

Constraint Pin	Related Pin	setup(ns)	hold(ns)
TE(LH)	CLKN(HL)	0.5670	-0.0860
TE(HL)	CLKN(HL)	0.4690	-0.4520
E(LH)	CLKN(HL)	0.5380	-0.0800
E(HL)	CLKN(HL)	0.4410	-0.4240

Constraint Pin	Related Pin	Minimum Pulse Width(ns)
CLKN(LHL)	CLKN(LH)	0.4760
CLKN(LHL)	CLKN(LH)	0.7910
CLKN(LHL)	CLKN(LH)	0.7480
CLKN(LHL)	CLKN(LH)	0.7110

PIN CAPACITANCE (pf)

Pin	Type	Capacitance (pf)
TE	input	0.0032
E	input	0.0034
CLKN	input	0.0069

DELAY AND OUTPUT TRANSITION TIME corresponding to min slew and load

Input Pin	Output	When Condition	Tin (ns)	Out Load (pf)	Delay (ns)	Tout (ns)
CLKN(HL)	Q(HL)	!E&TE	0.0100	0.0010	0.2281	0.0486
CLKN(HL)	Q(HL)	E&!TE	0.0100	0.0010	0.2281	0.0486
CLKN(HL)	Q(HL)	E&TE	0.0100	0.0010	0.2281	0.0486
CLKN(LH)	Q(LH)	!E&!TE	0.0100	0.0010	0.1562	0.0391
CLKN(LH)	Q(LH)	!E&TE	0.0100	0.0010	0.1564	0.0392
CLKN(LH)	Q(LH)	E&!TE	0.0100	0.0010	0.1564	0.0392
CLKN(LH)	Q(LH)	E&TE	0.0100	0.0010	0.1564	0.0392

DYNAMIC ENERGY

Input Pin	When Condition	Tin (ns)	Output	Out Load (pf)	Energy (uW/MHz)
CLKN	!E&TE	0.0100	Q(HL)	0.0010	0.4250
CLKN	E&!TE	0.0100	Q(HL)	0.0010	0.4247
CLKN	E&TE	0.0100	Q(HL)	0.0010	0.4247
CLKN	!E&!TE	0.0100	Q(LH)	0.0010	0.6172
CLKN	!E&TE	0.0100	Q(LH)	0.0010	0.2358
CLKN	E&!TE	0.0100	Q(LH)	0.0010	0.2360
CLKN	E&TE	0.0100	Q(LH)	0.0010	0.2359
E(LH)	!CLKN&!TE	0.0100	n/a	n/a	-0.0291
E(LH)	!CLKN&TE	0.0100	n/a	n/a	-0.0117
E(LH)	CLKN&!TE	0.0100	n/a	n/a	0.2707
E(LH)	CLKN&TE	0.0100	n/a	n/a	-0.0090
CLKN(LH)	!E&!TE	0.0100	n/a	n/a	0.1318
CLKN(LH)	!E&TE	0.0100	n/a	n/a	0.4486
CLKN(LH)	E&!TE	0.0100	n/a	n/a	0.4256
CLKN(LH)	E&TE	0.0100	n/a	n/a	0.4212
TE(HL)	!CLKN&!E	0.0100	n/a	n/a	0.0546
TE(HL)	CLKN&!E	0.0100	n/a	n/a	0.4458
TE(HL)	CLKN&E	0.0100	n/a	n/a	0.0296
TE(HL)	!CLKN&E	0.0100	n/a	n/a	0.0296
CLKN(HL)	!E&!TE	0.0100	n/a	n/a	0.2504
E(HL)	!CLKN&!TE	0.0100	n/a	n/a	0.0327
E(HL)	!CLKN&TE	0.0100	n/a	n/a	0.0135
E(HL)	CLKN&!TE	0.0100	n/a	n/a	0.4236
E(HL)	CLKN&TE	0.0100	n/a	n/a	0.0194
TE(LH)	!CLKN&!E	0.0100	n/a	n/a	-0.0259
TE(LH)	CLKN&!E	0.0100	n/a	n/a	0.2921
TE(LH)	CLKN&E	0.0100	n/a	n/a	-0.0258
TE(LH)	!CLKN&E	0.0100	n/a	n/a	-0.0281

LEAKAGE POWER

When Condition	Power (nW)
!CLKN&!E&!TE	0.4361
!CLKN&!E&TE	0.4276
!CLKN&E&!TE	0.4091
!CLKN&E&TE	0.4091
CLKN&!E&!TE	0.3206
CLKN&!E&TE	0.3310
CLKN&E&!TE	0.2956
CLKN&E&TE	0.2956

gf180mcu_fd_sc_mcu7t5v0__icgtn_2

gf180mcu_fd_sc_mcu7t5v0__icgtn_2 symbol

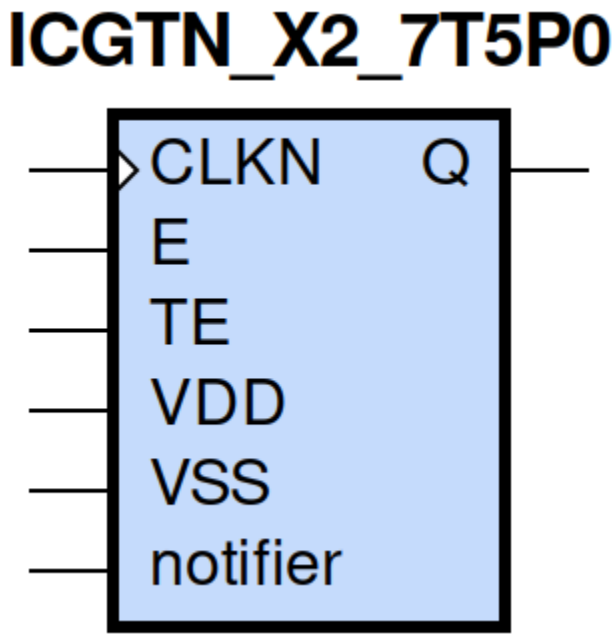

gf180mcu_fd_sc_mcu7t5v0__icgtn_2 schematic

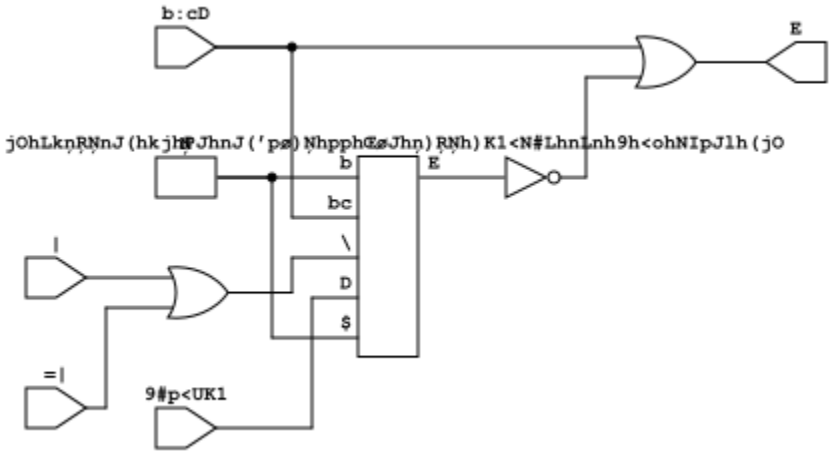

gf180mcu_fd_sc_mcu7t5v0__icgtn_2 layout

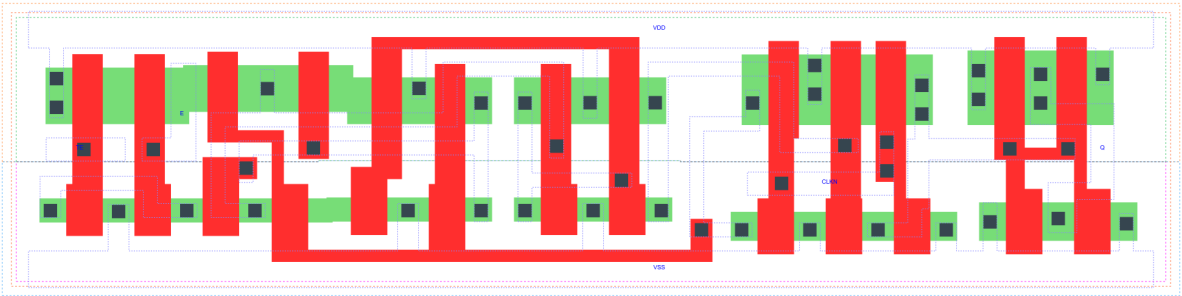

ICGTN_X2 is a negative-edge triggered clock-gating latch, 2X drive strength

Attributes

Attribute	Value
area	72.441600 μm^2
area	true μm^2
area	true μm^2
area	true μm^2
area	latch_negedge_precontrol μm^2
area	true μm^2

TRUTH TABLE

TE	E	CLKN	QDN(n+1)	Q(n+1)
L	L	H	H	H
L	H	H	L	H
H	L	H	L	H
H	H	H	L	H
X	X	L	QDN(n)	QDN(n)

FUNCTIONAL SCHEMATIC

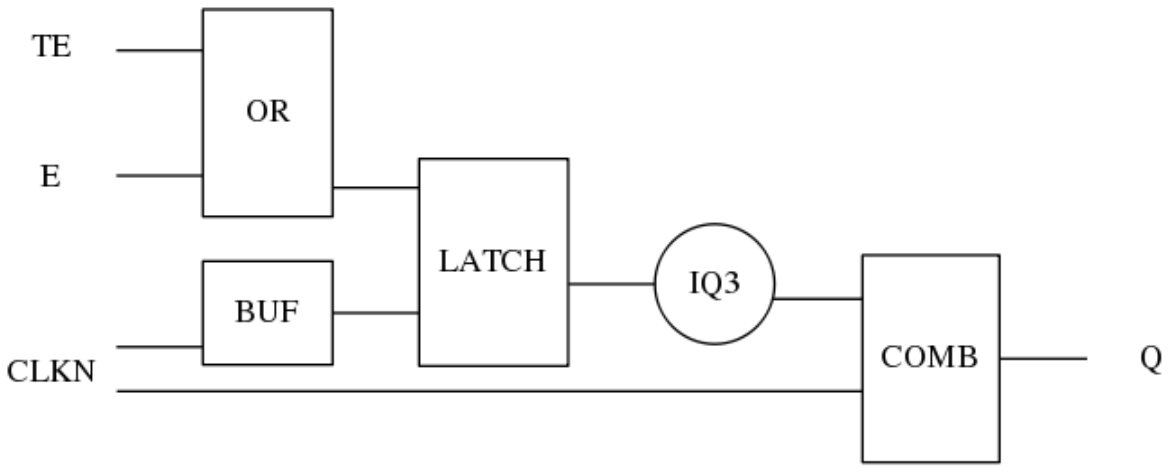

CONSTRAINTS

Constraint Pin	Related Pin	setup(ns)	hold(ns)
TE(LH)	CLKN(HL)	0.5900	-0.1140
TE(HL)	CLKN(HL)	0.4870	-0.4640
E(LH)	CLKN(HL)	0.5610	-0.1030
E(HL)	CLKN(HL)	0.4640	-0.4410

Constraint Pin	Related Pin	Minimum Pulse Width(ns)
CLKN(LHL)	CLKN(LH)	0.4760
CLKN(LHL)	CLKN(LH)	0.7970
CLKN(LHL)	CLKN(LH)	0.7600
CLKN(LHL)	CLKN(LH)	0.7170

PIN CAPACITANCE (pf)

Pin	Type	Capacitance (pf)
TE	input	0.0032
E	input	0.0034
CLKN	input	0.0081

DELAY AND OUTPUT TRANSITION TIME corresponding to min slew and load

Input Pin	Output	When Condition	Tin (ns)	Out Load (pf)	Delay (ns)	Tout (ns)
CLKN(HL)	Q(HL)	!E&TE	0.0100	0.0010	0.2496	0.0452
CLKN(HL)	Q(HL)	E&!TE	0.0100	0.0010	0.2495	0.0454
CLKN(HL)	Q(HL)	E&TE	0.0100	0.0010	0.2495	0.0452
CLKN(LH)	Q(LH)	!E&!TE	0.0100	0.0010	0.1770	0.0333
CLKN(LH)	Q(LH)	!E&TE	0.0100	0.0010	0.1770	0.0332
CLKN(LH)	Q(LH)	E&!TE	0.0100	0.0010	0.1770	0.0332
CLKN(LH)	Q(LH)	E&TE	0.0100	0.0010	0.1770	0.0332

DYNAMIC ENERGY

Input Pin	When Condition	Tin (ns)	Output	Out Load (pf)	Energy (uW/MHz)
CLKN	!E&TE	0.0100	Q(HL)	0.0010	0.5759
CLKN	E&!TE	0.0100	Q(HL)	0.0010	0.5756
CLKN	E&TE	0.0100	Q(HL)	0.0010	0.5755
CLKN	!E&!TE	0.0100	Q(LH)	0.0010	0.7065
CLKN	!E&TE	0.0100	Q(LH)	0.0010	0.3223
CLKN	E&!TE	0.0100	Q(LH)	0.0010	0.3222
CLKN	E&TE	0.0100	Q(LH)	0.0010	0.3224
E(LH)	!CLKN&!TE	0.0100	n/a	n/a	-0.0291
E(LH)	!CLKN&TE	0.0100	n/a	n/a	-0.0117
E(LH)	CLKN&!TE	0.0100	n/a	n/a	0.2782
E(LH)	CLKN&TE	0.0100	n/a	n/a	-0.0090
CLKN(LH)	!E&!TE	0.0100	n/a	n/a	0.1275
CLKN(LH)	!E&TE	0.0100	n/a	n/a	0.4528
CLKN(LH)	E&!TE	0.0100	n/a	n/a	0.4298
CLKN(LH)	E&TE	0.0100	n/a	n/a	0.4252
TE(HL)	!CLKN&!E	0.0100	n/a	n/a	0.0547
TE(HL)	CLKN&!E	0.0100	n/a	n/a	0.4490
TE(HL)	CLKN&E	0.0100	n/a	n/a	0.0296
TE(HL)	!CLKN&E	0.0100	n/a	n/a	0.0296
CLKN(HL)	!E&!TE	0.0100	n/a	n/a	0.2645
E(HL)	!CLKN&!TE	0.0100	n/a	n/a	0.0327
E(HL)	!CLKN&TE	0.0100	n/a	n/a	0.0135
E(HL)	CLKN&!TE	0.0100	n/a	n/a	0.4269
E(HL)	CLKN&TE	0.0100	n/a	n/a	0.0194
TE(LH)	!CLKN&!E	0.0100	n/a	n/a	-0.0260
TE(LH)	CLKN&!E	0.0100	n/a	n/a	0.2996
TE(LH)	CLKN&E	0.0100	n/a	n/a	-0.0258
TE(LH)	!CLKN&E	0.0100	n/a	n/a	-0.0281

LEAKAGE POWER

When Condition	Power (nW)
!CLKN&!E&!TE	0.4758
!CLKN&!E&TE	0.4518
!CLKN&E&!TE	0.4333
!CLKN&E&TE	0.4333
CLKN&!E&!TE	0.3464
CLKN&!E&TE	0.3567
CLKN&E&!TE	0.3213
CLKN&E&TE	0.3213

gf180mcu_fd_sc_mcu7t5v0__icgtn_4

gf180mcu_fd_sc_mcu7t5v0__icgtn_4 symbol

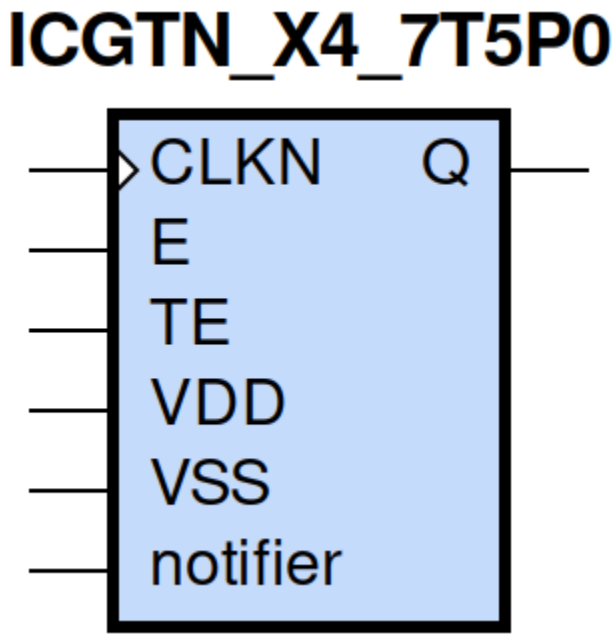

gf180mcu_fd_sc_mcu7t5v0__icgtn_4 schematic

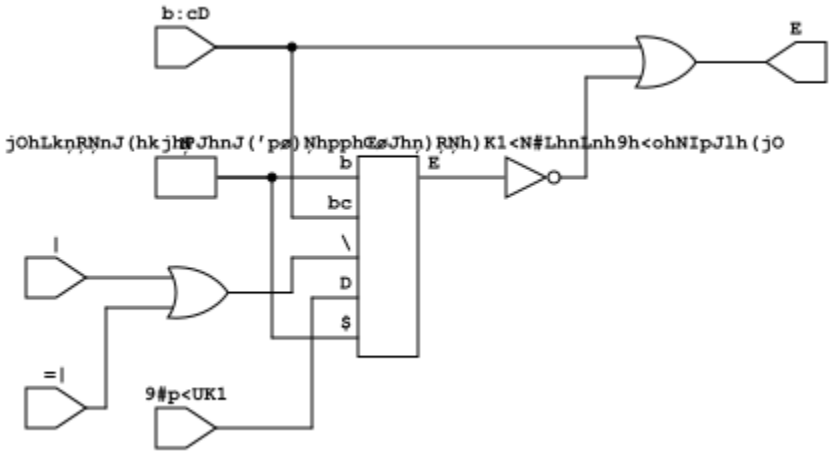

gf180mcu_fd_sc_mcu7t5v0__icgtn_4 layout

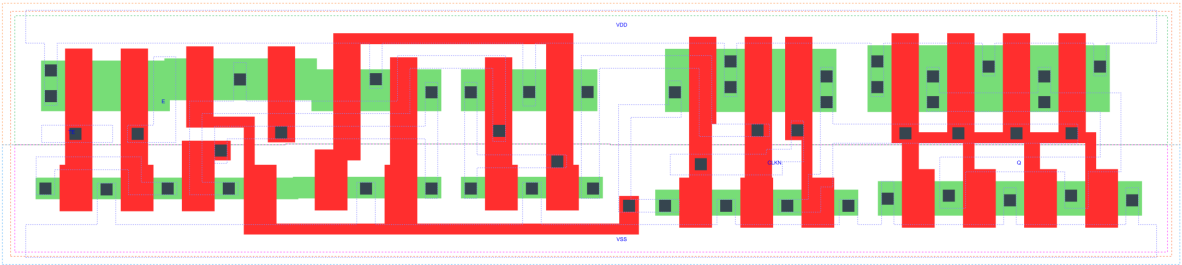

ICGTN_X4 is a negative-edge triggered clock-gating latch, 4X drive strength

Attributes

Attribute	Value
area	true µm^2
area	true µm^2
area	latch_negedge_precontrol µm^2
area	81.222400 µm^2
area	true µm^2
area	true µm^2

TRUTH TABLE

TE	E	CLKN	QDN(n+1)	Q(n+1)
L	L	H	H	H
L	H	H	L	H
H	L	H	L	H
H	H	H	L	H
X	X	L	QDN(n)	QDN(n)

FUNCTIONAL SCHEMATIC

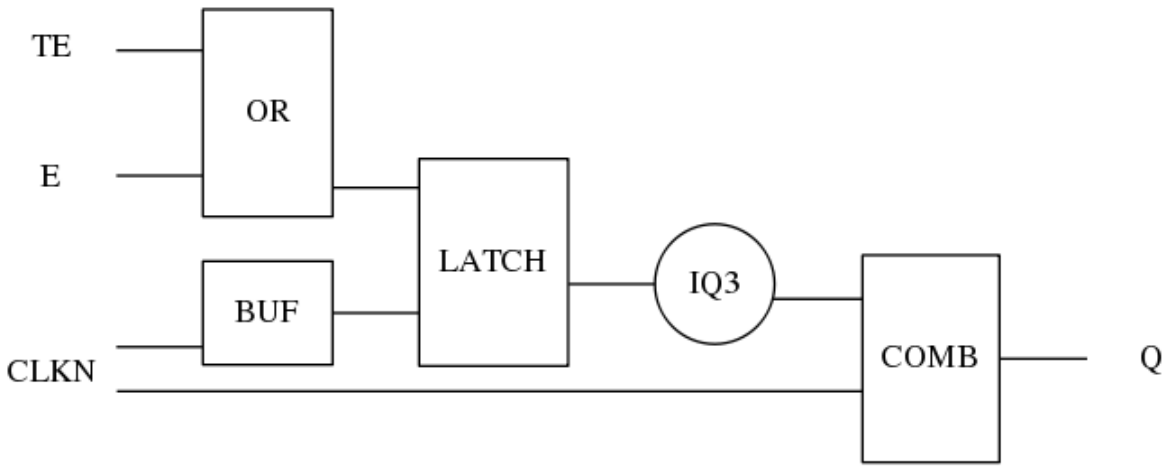

CONSTRAINTS

Constraint Pin	Related Pin	setup(ns)	hold(ns)
TE(LH)	CLKN(HL)	0.5900	-0.1140
TE(HL)	CLKN(HL)	0.4750	-0.4580
E(LH)	CLKN(HL)	0.5610	-0.1030
E(HL)	CLKN(HL)	0.4520	-0.4350

Constraint Pin	Related Pin	Minimum Pulse Width(ns)
CLKN(LHL)	CLKN(LH)	0.4760
CLKN(LHL)	CLKN(LH)	0.7970
CLKN(LHL)	CLKN(LH)	0.7600
CLKN(LHL)	CLKN(LH)	0.7230

PIN CAPACITANCE (pf)

Pin	Type	Capacitance (pf)
TE	input	0.0032
E	input	0.0034
CLKN	input	0.0080

DELAY AND OUTPUT TRANSITION TIME corresponding to min slew and load

Input Pin	Output	When Condition	Tin (ns)	Out Load (pf)	Delay (ns)	Tout (ns)
CLKN(HL)	Q(HL)	!E&TE	0.0100	0.0010	0.3772	0.0635
CLKN(HL)	Q(HL)	E&!TE	0.0100	0.0010	0.3772	0.0635
CLKN(HL)	Q(HL)	E&TE	0.0100	0.0010	0.3772	0.0635
CLKN(LH)	Q(LH)	!E&!TE	0.0100	0.0010	0.2591	0.0424
CLKN(LH)	Q(LH)	!E&TE	0.0100	0.0010	0.2591	0.0424
CLKN(LH)	Q(LH)	E&!TE	0.0100	0.0010	0.2591	0.0425
CLKN(LH)	Q(LH)	E&TE	0.0100	0.0010	0.2591	0.0426

DYNAMIC ENERGY

Input Pin	When Condition	Tin (ns)	Output	Out Load (pf)	Energy (uW/MHz)
CLKN	!E&TE	0.0100	Q(HL)	0.0010	1.0025
CLKN	E&!TE	0.0100	Q(HL)	0.0010	1.0023
CLKN	E&TE	0.0100	Q(HL)	0.0010	1.0022
CLKN	!E&!TE	0.0100	Q(LH)	0.0010	0.9868
CLKN	!E&TE	0.0100	Q(LH)	0.0010	0.6027
CLKN	E&!TE	0.0100	Q(LH)	0.0010	0.6030
CLKN	E&TE	0.0100	Q(LH)	0.0010	0.6034
E(LH)	!CLKN&!TE	0.0100	n/a	n/a	-0.0291
E(LH)	!CLKN&TE	0.0100	n/a	n/a	-0.0117
E(LH)	CLKN&!TE	0.0100	n/a	n/a	0.2782
E(LH)	CLKN&TE	0.0100	n/a	n/a	-0.0090
CLKN(LH)	!E&!TE	0.0100	n/a	n/a	0.1274
CLKN(LH)	!E&TE	0.0100	n/a	n/a	0.4529
CLKN(LH)	E&!TE	0.0100	n/a	n/a	0.4296
CLKN(LH)	E&TE	0.0100	n/a	n/a	0.4252
TE(HL)	!CLKN&!E	0.0100	n/a	n/a	0.0546
TE(HL)	CLKN&!E	0.0100	n/a	n/a	0.4490
TE(HL)	CLKN&E	0.0100	n/a	n/a	0.0296
TE(HL)	!CLKN&E	0.0100	n/a	n/a	0.0296
CLKN(HL)	!E&!TE	0.0100	n/a	n/a	0.2650
E(HL)	!CLKN&!TE	0.0100	n/a	n/a	0.0327
E(HL)	!CLKN&TE	0.0100	n/a	n/a	0.0135
E(HL)	CLKN&!TE	0.0100	n/a	n/a	0.4268
E(HL)	CLKN&TE	0.0100	n/a	n/a	0.0194
TE(LH)	!CLKN&!E	0.0100	n/a	n/a	-0.0259
TE(LH)	CLKN&!E	0.0100	n/a	n/a	0.2996
TE(LH)	CLKN&E	0.0100	n/a	n/a	-0.0258
TE(LH)	!CLKN&E	0.0100	n/a	n/a	-0.0281

LEAKAGE POWER

When Condition	Power (nW)
!CLKN&!E&!TE	0.5268
!CLKN&!E&TE	0.5048
!CLKN&E&!TE	0.4862
!CLKN&E&TE	0.4862
CLKN&!E&!TE	0.3978
CLKN&!E&TE	0.4077
CLKN&E&!TE	0.3722
CLKN&E&TE	0.3722

gf180mcu_fd_sc_mcu7t5v0__icgtp_1

gf180mcu_fd_sc_mcu7t5v0__icgtp_1 symbol

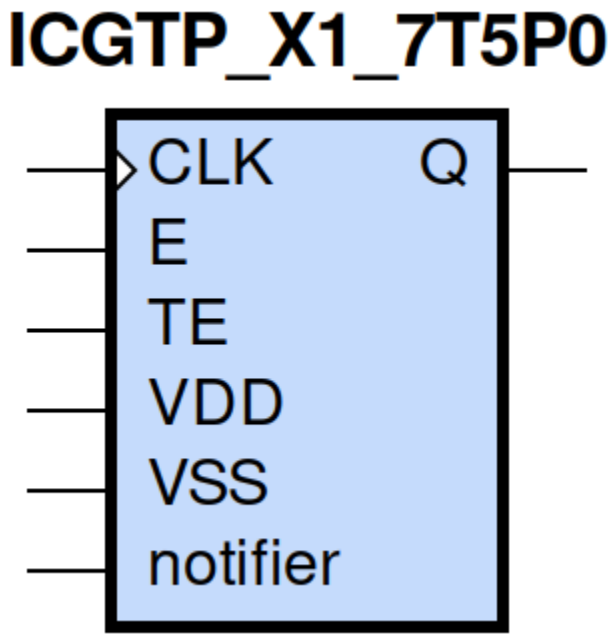

gf180mcu_fd_sc_mcu7t5v0__icgtp_1 schematic

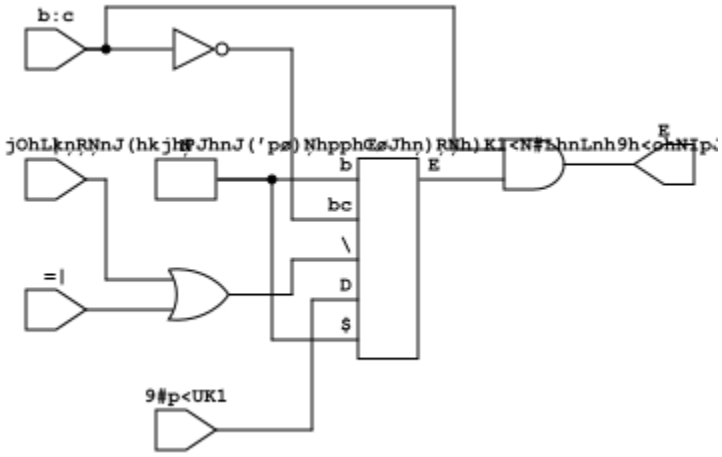

gf180mcu_fd_sc_mcu7t5v0__icgtp_1 layout

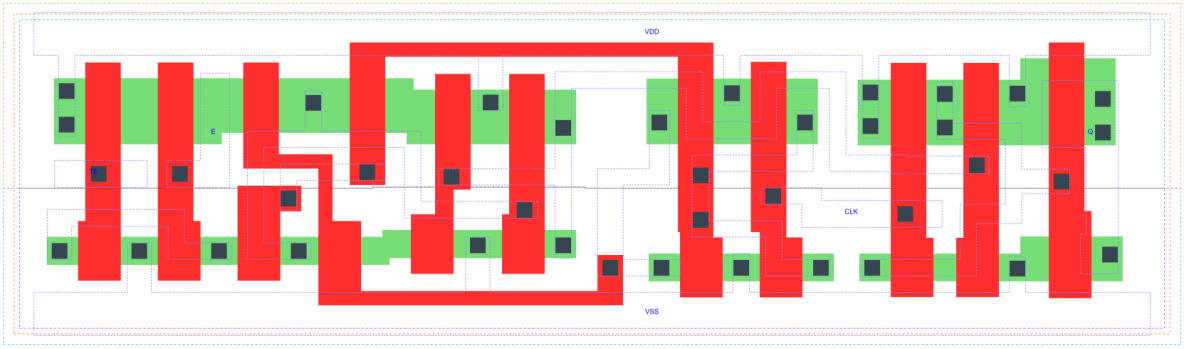

ICGTP_X1 is a positive-edge triggered clock-gating latch, 1X drive strength

Attributes

Attribute	Value
area	true μm^2
area	latch_posedge_precontrol μm^2
area	61.465600 μm^2
area	true μm^2
area	true μm^2
area	true μm^2

TRUTH TABLE

TE	E	CLK	QD(n+1)	Q(n+1)
L	L	L	L	L
L	H	L	H	L
H	L	L	H	L
H	H	L	H	L
X	X	H	QD(n)	QD(n)

FUNCTIONAL SCHEMATIC

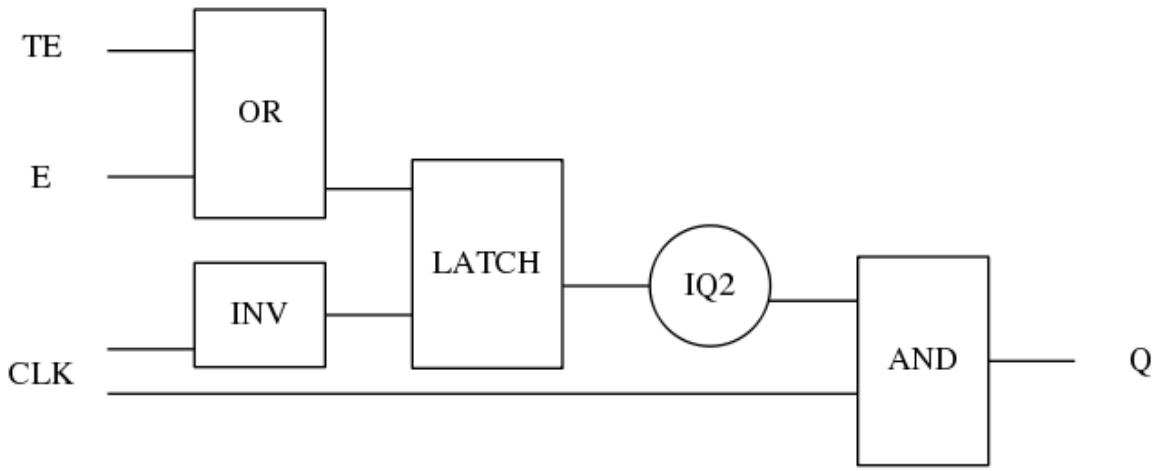

CONSTRAINTS

Constraint Pin	Related Pin	setup(ns)	hold(ns)
TE(HL)	CLK(LH)	0.2980	-0.2350
TE(LH)	CLK(LH)	0.5270	-0.2180
E(HL)	CLK(LH)	0.2690	-0.2120
E(LH)	CLK(LH)	0.4870	-0.1830

Constraint Pin	Related Pin	Minimum Pulse Width(ns)
CLK(HLH)	CLK(HL)	0.4660
CLK(HLH)	CLK(HL)	0.6260
CLK(HLH)	CLK(HL)	0.5890
CLK(HLH)	CLK(HL)	0.5530

PIN CAPACITANCE (pf)

Pin	Type	Capacitance (pf)
TE	input	0.0032
E	input	0.0034
CLK	input	0.0069

DELAY AND OUTPUT TRANSITION TIME corresponding to min slew and load

Input Pin	Output	When Condition	Tin (ns)	Out Load (pf)	Delay (ns)	Tout (ns)
CLK(LH)	Q(LH)	!E&TE	0.0100	0.0010	0.2240	0.0489
CLK(LH)	Q(LH)	E&!TE	0.0100	0.0010	0.2240	0.0489
CLK(LH)	Q(LH)	E&TE	0.0100	0.0010	0.2240	0.0489
CLK(HL)	Q(HL)	!E&!TE	0.0100	0.0010	0.1591	0.0367
CLK(HL)	Q(HL)	!E&TE	0.0100	0.0010	0.1591	0.0368
CLK(HL)	Q(HL)	E&!TE	0.0100	0.0010	0.1590	0.0367
CLK(HL)	Q(HL)	E&TE	0.0100	0.0010	0.1591	0.0368

DYNAMIC ENERGY

Input Pin	When Condition	Tin (ns)	Output	Out Load (pf)	Energy (uW/MHz)
CLK	!E&TE	0.0100	Q(LH)	0.0010	0.2784
CLK	E&!TE	0.0100	Q(LH)	0.0010	0.2781
CLK	E&TE	0.0100	Q(LH)	0.0010	0.2782
CLK	!E&!TE	0.0100	Q(HL)	0.0010	0.6830
CLK	!E&TE	0.0100	Q(HL)	0.0010	0.4184
CLK	E&!TE	0.0100	Q(HL)	0.0010	0.4185
CLK	E&TE	0.0100	Q(HL)	0.0010	0.4185
E(LH)	!CLK&!TE	0.0100	n/a	n/a	0.2349
E(LH)	!CLK&TE	0.0100	n/a	n/a	-0.0090
E(LH)	CLK&!TE	0.0100	n/a	n/a	-0.0291
E(LH)	CLK&TE	0.0100	n/a	n/a	-0.0117
CLK(LH)	!E&!TE	0.0100	n/a	n/a	0.1360
TE(HL)	!CLK&!E	0.0100	n/a	n/a	0.3208
TE(HL)	!CLK&E	0.0100	n/a	n/a	0.0296
TE(HL)	CLK&!E	0.0100	n/a	n/a	0.0545
TE(HL)	CLK&E	0.0100	n/a	n/a	0.0296
TE(LH)	!CLK&!E	0.0100	n/a	n/a	0.2551
TE(LH)	!CLK&E	0.0100	n/a	n/a	-0.0258
TE(LH)	CLK&!E	0.0100	n/a	n/a	-0.0260
TE(LH)	CLK&E	0.0100	n/a	n/a	-0.0281
E(HL)	!CLK&!TE	0.0100	n/a	n/a	0.2988
E(HL)	!CLK&TE	0.0100	n/a	n/a	0.0194
E(HL)	CLK&!TE	0.0100	n/a	n/a	0.0326
E(HL)	CLK&TE	0.0100	n/a	n/a	0.0135
CLK(HL)	!E&!TE	0.0100	n/a	n/a	0.2706
CLK(HL)	!E&TE	0.0100	n/a	n/a	0.5467
CLK(HL)	E&!TE	0.0100	n/a	n/a	0.5194
CLK(HL)	E&TE	0.0100	n/a	n/a	0.5171

LEAKAGE POWER

When Condition	Power (nW)
!CLK&!E&!TE	0.2950
!CLK&!E&TE	0.3062
!CLK&E&!TE	0.2707
!CLK&E&TE	0.2707
CLK&!E&!TE	0.4084
CLK&!E&TE	0.3991
CLK&E&!TE	0.3803
CLK&E&TE	0.3803

gf180mcu_fd_sc_mcu7t5v0__icgtp_2

gf180mcu_fd_sc_mcu7t5v0__icgtp_2 symbol

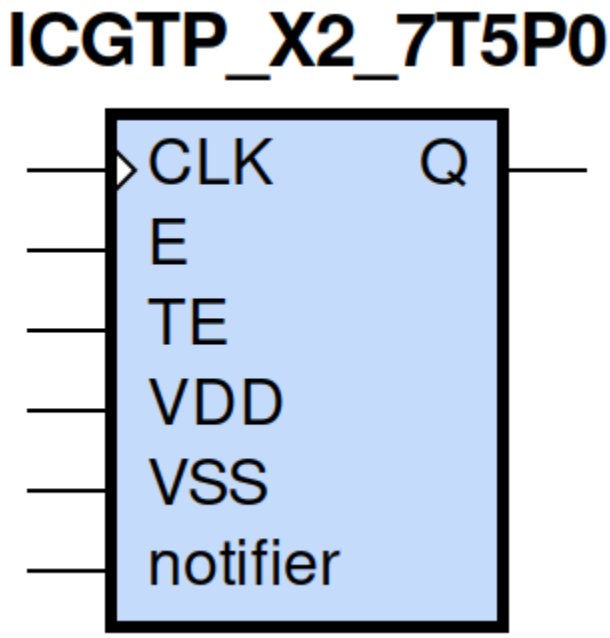

gf180mcu_fd_sc_mcu7t5v0__icgtp_2 schematic

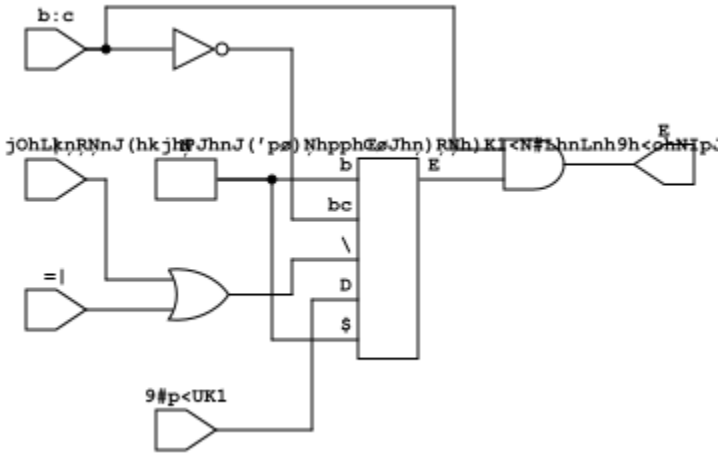

gf180mcu_fd_sc_mcu7t5v0__icgtp_2 layout

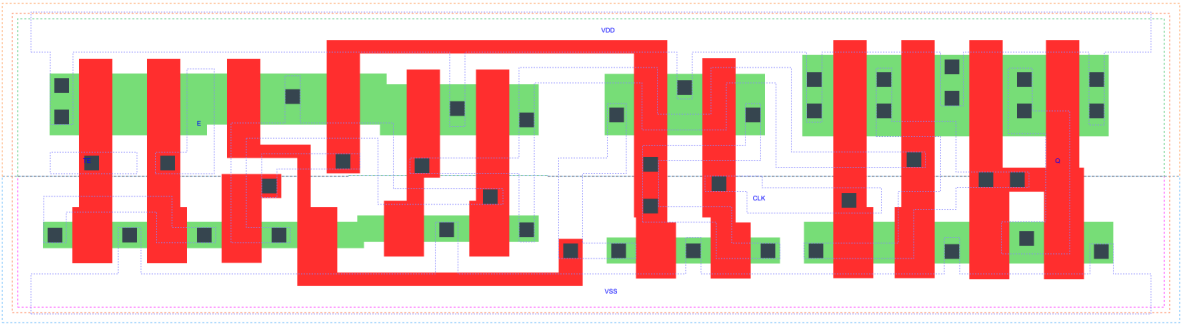

ICGTP_X2 is a positive-edge triggered clock-gating latch, 2X drive strength

Attributes

Attribute	Value
area	true μm^2
area	latch_posedge_precontrol μm^2
area	65.856000 μm^2
area	true μm^2
area	true μm^2
area	true μm^2

TRUTH TABLE

TE	E	CLK	QD(n+1)	Q(n+1)
L	L	L	L	L
L	H	L	H	L
H	L	L	H	L
H	H	L	H	L
X	X	H	QD(n)	QD(n)

FUNCTIONAL SCHEMATIC

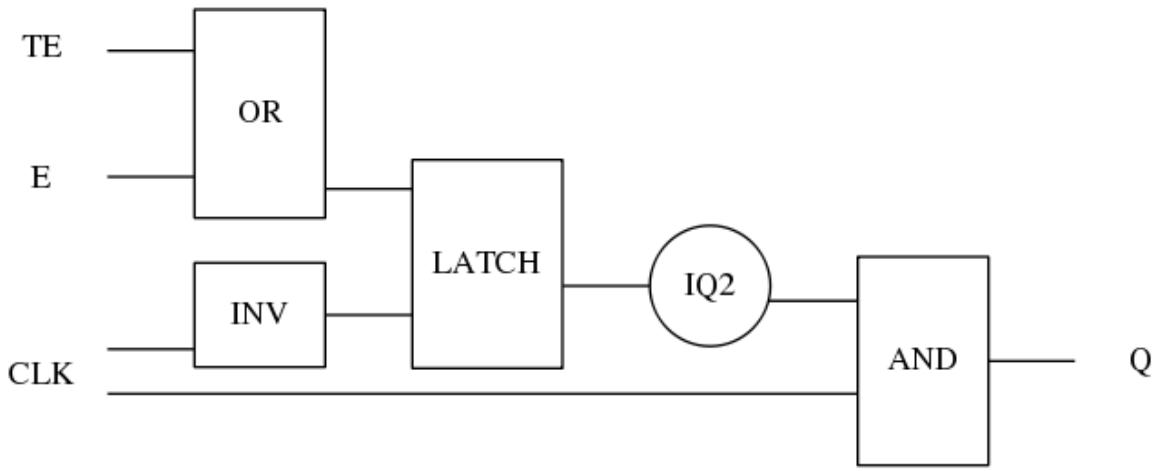

CONSTRAINTS

Constraint Pin	Related Pin	setup(ns)	hold(ns)
TE(HL)	CLK(LH)	0.3260	-0.2400
TE(LH)	CLK(LH)	0.5780	-0.2230
E(HL)	CLK(LH)	0.3030	-0.2120
E(LH)	CLK(LH)	0.5440	-0.1890

Constraint Pin	Related Pin	Minimum Pulse Width(ns)
CLK(HLH)	CLK(HL)	0.4760
CLK(HLH)	CLK(HL)	0.6870
CLK(HLH)	CLK(HL)	0.6440
CLK(HLH)	CLK(HL)	0.6070

PIN CAPACITANCE (pf)

Pin	Type	Capacitance (pf)
TE	input	0.0032
E	input	0.0034
CLK	input	0.0080

DELAY AND OUTPUT TRANSITION TIME corresponding to min slew and load

Input Pin	Output	When Condition	Tin (ns)	Out Load (pf)	Delay (ns)	Tout (ns)
CLK(LH)	Q(LH)	!E&TE	0.0100	0.0010	0.2105	0.0383
CLK(LH)	Q(LH)	E&!TE	0.0100	0.0010	0.2105	0.0386
CLK(LH)	Q(LH)	E&TE	0.0100	0.0010	0.2105	0.0383
CLK(HL)	Q(HL)	!E&!TE	0.0100	0.0010	0.1614	0.0302
CLK(HL)	Q(HL)	!E&TE	0.0100	0.0010	0.1615	0.0302
CLK(HL)	Q(HL)	E&!TE	0.0100	0.0010	0.1615	0.0303
CLK(HL)	Q(HL)	E&TE	0.0100	0.0010	0.1614	0.0303

DYNAMIC ENERGY

Input Pin	When Condition	Tin (ns)	Output	Out Load (pf)	Energy (uW/MHz)
CLK	!E&TE	0.0100	Q(LH)	0.0010	0.3673
CLK	E&!TE	0.0100	Q(LH)	0.0010	0.3671
CLK	E&TE	0.0100	Q(LH)	0.0010	0.3670
CLK	!E&!TE	0.0100	Q(HL)	0.0010	0.8053
CLK	!E&TE	0.0100	Q(HL)	0.0010	0.5314
CLK	E&!TE	0.0100	Q(HL)	0.0010	0.5315
CLK	E&TE	0.0100	Q(HL)	0.0010	0.5317
E(LH)	!CLK&!TE	0.0100	n/a	n/a	0.2450
E(LH)	!CLK&TE	0.0100	n/a	n/a	-0.0090
E(LH)	CLK&!TE	0.0100	n/a	n/a	-0.0291
E(LH)	CLK&TE	0.0100	n/a	n/a	-0.0117
CLK(LH)	!E&!TE	0.0100	n/a	n/a	0.1289
TE(HL)	!CLK&!E	0.0100	n/a	n/a	0.3300
TE(HL)	!CLK&E	0.0100	n/a	n/a	0.0296
TE(HL)	CLK&!E	0.0100	n/a	n/a	0.0545
TE(HL)	CLK&E	0.0100	n/a	n/a	0.0296
TE(LH)	!CLK&!E	0.0100	n/a	n/a	0.2652
TE(LH)	!CLK&E	0.0100	n/a	n/a	-0.0258
TE(LH)	CLK&!E	0.0100	n/a	n/a	-0.0260
TE(LH)	CLK&E	0.0100	n/a	n/a	-0.0281
E(HL)	!CLK&!TE	0.0100	n/a	n/a	0.3076
E(HL)	!CLK&TE	0.0100	n/a	n/a	0.0194
E(HL)	CLK&!TE	0.0100	n/a	n/a	0.0327
E(HL)	CLK&TE	0.0100	n/a	n/a	0.0135
CLK(HL)	!E&!TE	0.0100	n/a	n/a	0.2828
CLK(HL)	!E&TE	0.0100	n/a	n/a	0.5693
CLK(HL)	E&!TE	0.0100	n/a	n/a	0.5423
CLK(HL)	E&TE	0.0100	n/a	n/a	0.5403

LEAKAGE POWER

When Condition	Power (nW)
!CLK&!E&!TE	0.3213
!CLK&!E&TE	0.3316
!CLK&E&!TE	0.2961
!CLK&E&TE	0.2961
CLK&!E&!TE	0.4614
CLK&!E&TE	0.4249
CLK&E&!TE	0.4061
CLK&E&TE	0.4061

gf180mcu_fd_sc_mcu7t5v0__icgtp_4

gf180mcu_fd_sc_mcu7t5v0__icgtp_4 symbol

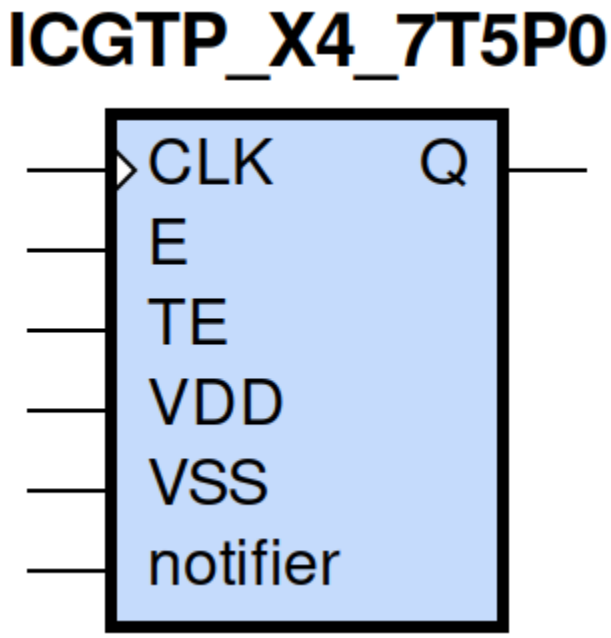

gf180mcu_fd_sc_mcu7t5v0__icgtp_4 schematic

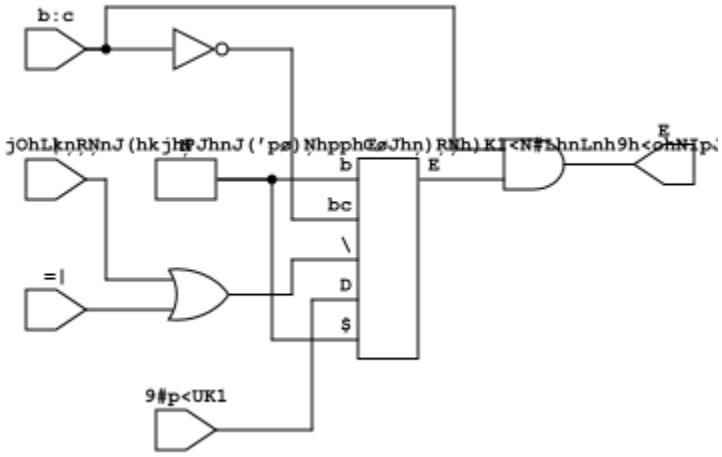

gf180mcu_fd_sc_mcu7t5v0__icgtp_4 layout

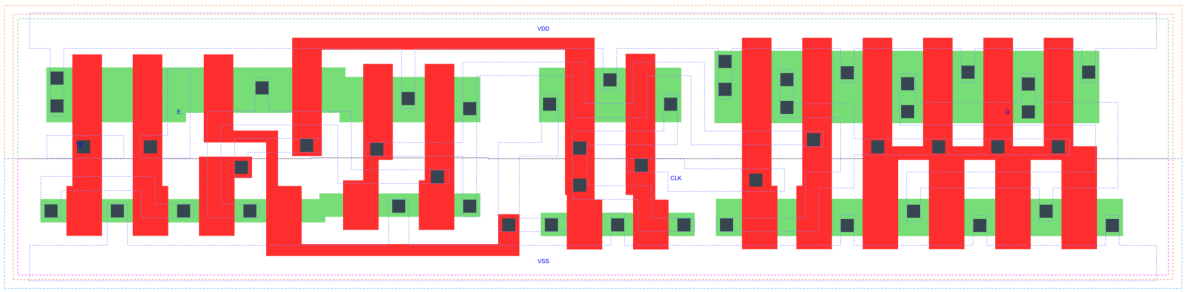

ICGTP_X4 is a positive-edge triggered clock-gating latch, 4X drive strength

Attributes

Attribute	Value
area	latch_posedge_precontrol µm^2
area	true µm^2
area	true µm^2
area	true µm^2
area	74.636800 µm^2
area	true µm^2

TRUTH TABLE

TE	E	CLK	QD(n+1)	Q(n+1)
L	L	L	L	L
L	H	L	H	L
H	L	L	H	L
H	H	L	H	L
X	X	H	QD(n)	QD(n)

FUNCTIONAL SCHEMATIC

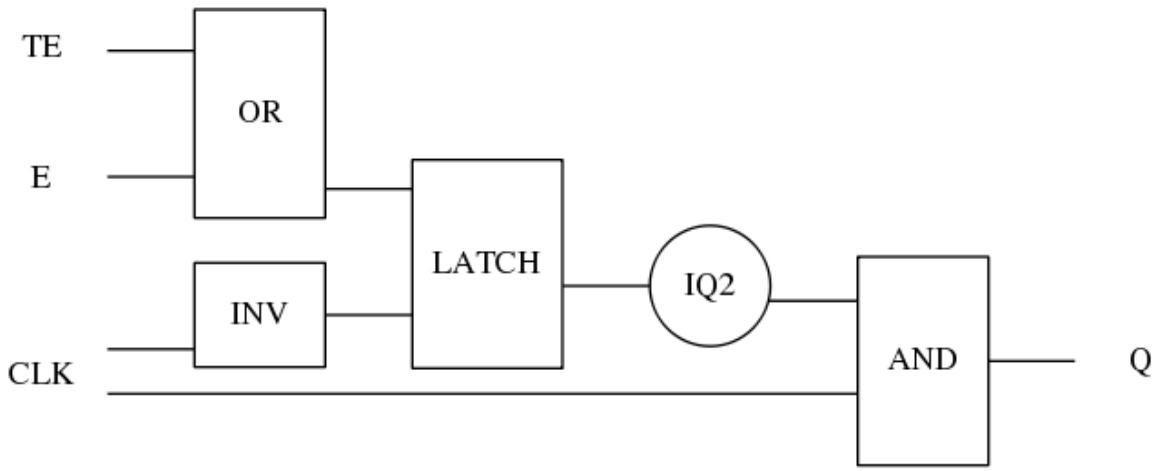

CONSTRAINTS

Constraint Pin	Related Pin	setup(ns)	hold(ns)
TE(HL)	CLK(LH)	0.3030	-0.2000
TE(LH)	CLK(LH)	0.5840	-0.2230
E(HL)	CLK(LH)	0.2810	-0.1720
E(LH)	CLK(LH)	0.5500	-0.1890

Constraint Pin	Related Pin	Minimum Pulse Width(ns)
CLK(HLH)	CLK(HL)	0.4760
CLK(HLH)	CLK(HL)	0.6990
CLK(HLH)	CLK(HL)	0.6620
CLK(HLH)	CLK(HL)	0.6140

PIN CAPACITANCE (pf)

Pin	Type	Capacitance (pf)
TE	input	0.0032
E	input	0.0033
CLK	input	0.0080

DELAY AND OUTPUT TRANSITION TIME corresponding to min slew and load

Input Pin	Output	When Condition	Tin (ns)	Out Load (pf)	Delay (ns)	Tout (ns)
CLK(LH)	Q(LH)	!E&TE	0.0100	0.0010	0.3052	0.0492
CLK(LH)	Q(LH)	E&!TE	0.0100	0.0010	0.3052	0.0492
CLK(LH)	Q(LH)	E&TE	0.0100	0.0010	0.3052	0.0492
CLK(HL)	Q(HL)	!E&!TE	0.0100	0.0010	0.2303	0.0406
CLK(HL)	Q(HL)	!E&TE	0.0100	0.0010	0.2303	0.0405
CLK(HL)	Q(HL)	E&!TE	0.0100	0.0010	0.2303	0.0404
CLK(HL)	Q(HL)	E&TE	0.0100	0.0010	0.2303	0.0405

DYNAMIC ENERGY

Input Pin	When Condition	Tin (ns)	Output	Out Load (pf)	Energy (uW/MHz)
CLK	!E&TE	0.0100	Q(LH)	0.0010	0.6942
CLK	E&!TE	0.0100	Q(LH)	0.0010	0.6938
CLK	E&TE	0.0100	Q(LH)	0.0010	0.6939
CLK	!E&!TE	0.0100	Q(HL)	0.0010	1.0826
CLK	!E&TE	0.0100	Q(HL)	0.0010	0.8094
CLK	E&!TE	0.0100	Q(HL)	0.0010	0.8092
CLK	E&TE	0.0100	Q(HL)	0.0010	0.8095
E(LH)	!CLK&!TE	0.0100	n/a	n/a	0.2427
E(LH)	!CLK&TE	0.0100	n/a	n/a	-0.0090
E(LH)	CLK&!TE	0.0100	n/a	n/a	-0.0291
E(LH)	CLK&TE	0.0100	n/a	n/a	-0.0117
CLK(LH)	!E&!TE	0.0100	n/a	n/a	0.1290
TE(HL)	!CLK&!E	0.0100	n/a	n/a	0.3295
TE(HL)	!CLK&E	0.0100	n/a	n/a	0.0296
TE(HL)	CLK&!E	0.0100	n/a	n/a	0.0546
TE(HL)	CLK&E	0.0100	n/a	n/a	0.0296
TE(LH)	!CLK&!E	0.0100	n/a	n/a	0.2629
TE(LH)	!CLK&E	0.0100	n/a	n/a	-0.0258
TE(LH)	CLK&!E	0.0100	n/a	n/a	-0.0259
TE(LH)	CLK&E	0.0100	n/a	n/a	-0.0281
E(HL)	!CLK&!TE	0.0100	n/a	n/a	0.3071
E(HL)	!CLK&TE	0.0100	n/a	n/a	0.0194
E(HL)	CLK&!TE	0.0100	n/a	n/a	0.0327
E(HL)	CLK&TE	0.0100	n/a	n/a	0.0135
CLK(HL)	!E&!TE	0.0100	n/a	n/a	0.2831
CLK(HL)	!E&TE	0.0100	n/a	n/a	0.5675
CLK(HL)	E&!TE	0.0100	n/a	n/a	0.5403
CLK(HL)	E&TE	0.0100	n/a	n/a	0.5383

LEAKAGE POWER

When Condition	Power (nW)
!CLK&!E&!TE	0.3741
!CLK&!E&TE	0.3845
!CLK&E&!TE	0.3490
!CLK&E&TE	0.3490
CLK&!E&!TE	0.5149
CLK&!E&TE	0.4758
CLK&E&!TE	0.4571
CLK&E&TE	0.4571

gf180mcu_fd_sc_mcu7t5v0__inv_1

gf180mcu_fd_sc_mcu7t5v0__inv_1 symbol

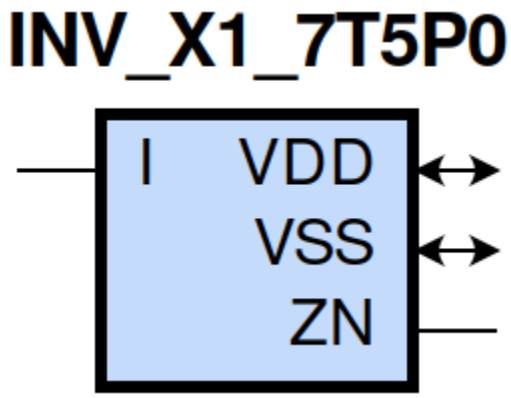

gf180mcu_fd_sc_mcu7t5v0__inv_1 schematic

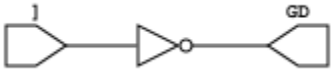

gf180mcu_fd_sc_mcu7t5v0__inv_1 layout

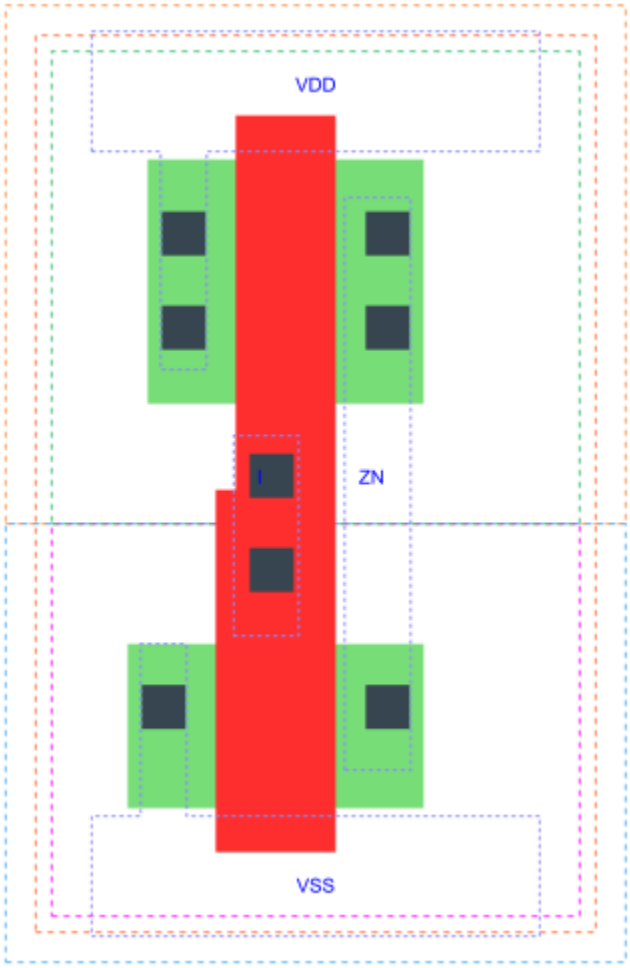

INV_X1 is an inverter, 1X drive strength

Attributes

Attribute	Value
area	8.780800 μm^2

OUTPUT FUNCTIONS

Output Pin	Function
ZN	(!I)

TRUTH TABLE FOR ZN

I	ZN
0	1
1	0

FUNCTIONAL SCHEMATIC

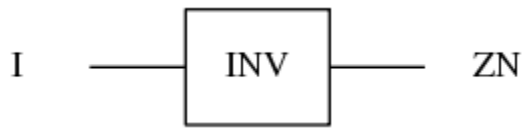

PIN CAPACITANCE (pf)

Pin	Type	Capacitance (pf)
I	input	0.0047

DELAY AND OUTPUT TRANSITION TIME corresponding to min slew and load

Input Pin	Output	When Condition	Tin (ns)	Out Load (pf)	Delay (ns)	Tout (ns)
I(LH)	ZN(HL)	default	0.0100	0.0010	0.0377	0.0189
I(HL)	ZN(LH)	default	0.0100	0.0010	0.0499	0.0328

DYNAMIC ENERGY

Input Pin	When Condition	Tin (ns)	Output	Out Load (pf)	Energy (uW/MHz)
I	default	0.0100	ZN(HL)	0.0010	-0.0021
I	default	0.0100	ZN(LH)	0.0010	0.0946

LEAKAGE POWER

When Condition	Power (nW)
!I	0.0754
I	0.0765

gf180mcu_fd_sc_mcu7t5v0__inv_x12

gf180mcu_fd_sc_mcu7t5v0__inv_x12 symbol

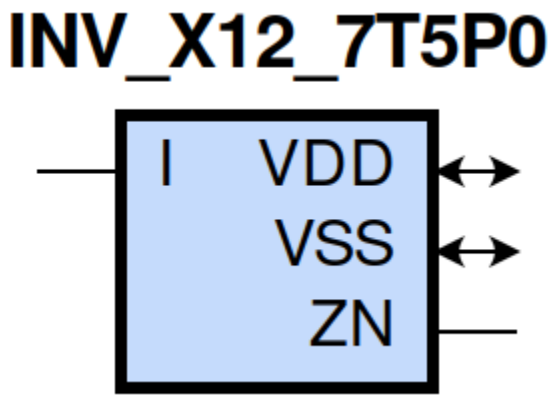

gf180mcu_fd_sc_mcu7t5v0__inv_x12 schematic

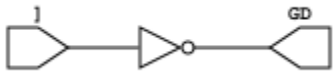

gf180mcu_fd_sc_mcu7t5v0__inv_x12 layout

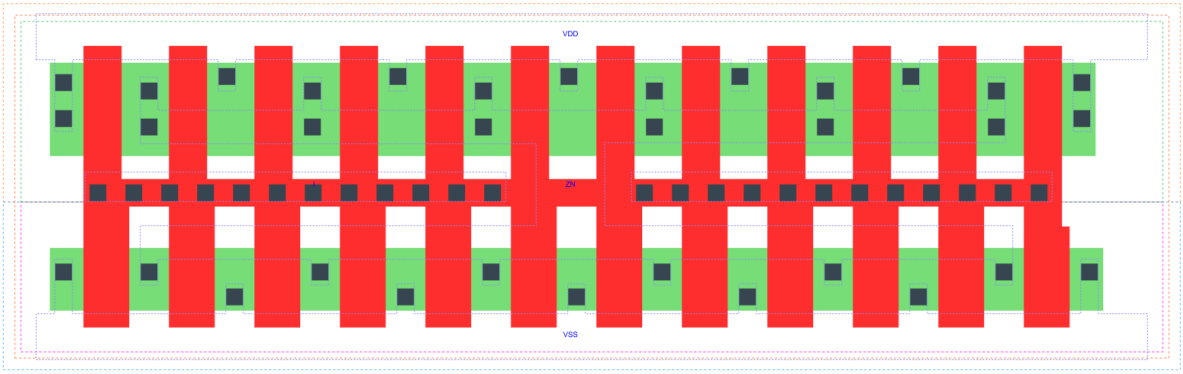

INV_X12 is an inverter, 12X drive strength

Attributes

Attribute	Value
area	57.075200 μm^2

OUTPUT FUNCTIONS

Output Pin	Function
ZN	(!I)

TRUTH TABLE FOR ZN

I	ZN
0	1
1	0

FUNCTIONAL SCHEMATIC

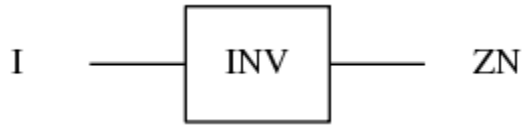

PIN CAPACITANCE (pf)

Pin	Type	Capacitance (pf)
I	input	0.0555

DELAY AND OUTPUT TRANSITION TIME corresponding to min slew and load

Input Pin	Output	When Condition	Tin (ns)	Out Load (pf)	Delay (ns)	Tout (ns)
I(LH)	ZN(HL)	default	0.0100	0.0010	0.0280	0.0110
I(HL)	ZN(LH)	default	0.0100	0.0010	0.0340	0.0194

DYNAMIC ENERGY

Input Pin	When Condition	Tin (ns)	Output	Out Load (pf)	Energy (uW/MHz)
I	default	0.0100	ZN(HL)	0.0010	-0.1269
I	default	0.0100	ZN(LH)	0.0010	0.9949

LEAKAGE POWER

When Condition	Power (nW)
!I	0.3554
I	0.3679

gf180mcu_fd_sc_mcu7t5v0__inv_x16

gf180mcu_fd_sc_mcu7t5v0__inv_x16 symbol

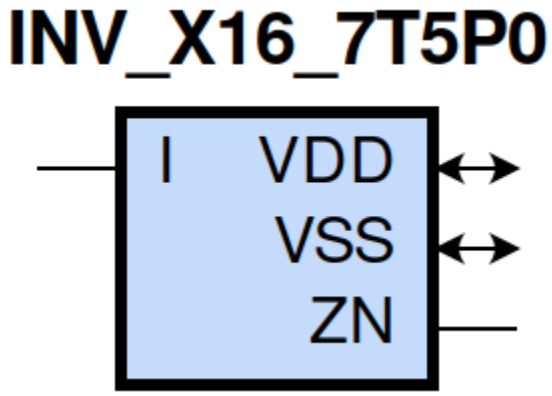

gf180mcu_fd_sc_mcu7t5v0__inv_x16 schematic

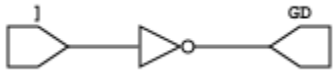

gf180mcu_fd_sc_mcu7t5v0__inv_x16 layout

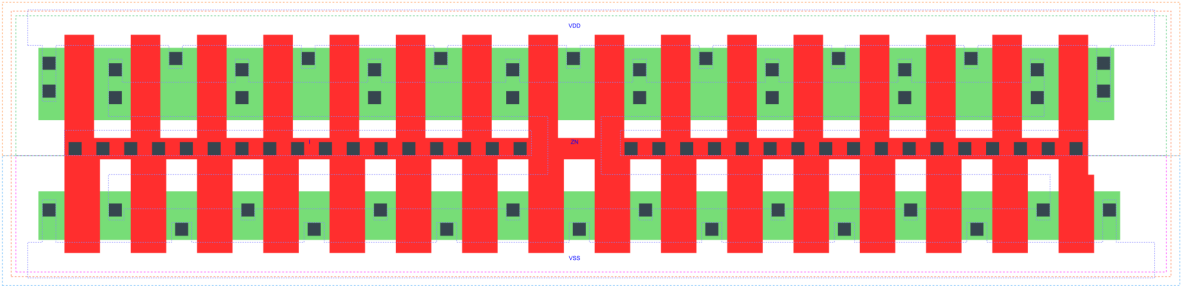

INV_X16 is an inverter, 16X drive strength

Attributes

Attribute	Value
area	74.636800 μm^2

OUTPUT FUNCTIONS

Output Pin	Function
ZN	(!I)

TRUTH TABLE FOR ZN

I	ZN
0	1
1	0

FUNCTIONAL SCHEMATIC

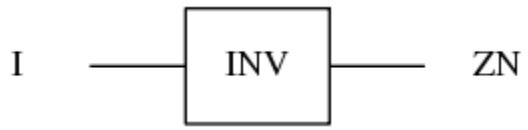

PIN CAPACITANCE (pf)

Pin	Type	Capacitance (pf)
I	input	0.0748

DELAY AND OUTPUT TRANSITION TIME corresponding to min slew and load

Input Pin	Output	When Condition	Tin (ns)	Out Load (pf)	Delay (ns)	Tout (ns)
I(LH)	ZN(HL)	default	0.0100	0.0010	0.0287	0.0114
I(HL)	ZN(LH)	default	0.0100	0.0010	0.0350	0.0201

DYNAMIC ENERGY

Input Pin	When Condition	Tin (ns)	Output	Out Load (pf)	Energy (uW/MHz)
I	default	0.0100	ZN(HL)	0.0010	-0.1686
I	default	0.0100	ZN(LH)	0.0010	1.3656

LEAKAGE POWER

When Condition	Power (nW)
!I	0.4572
I	0.4739

gf180mcu_fd_sc_mcu7t5v0__inv_2

gf180mcu_fd_sc_mcu7t5v0__inv_2 symbol

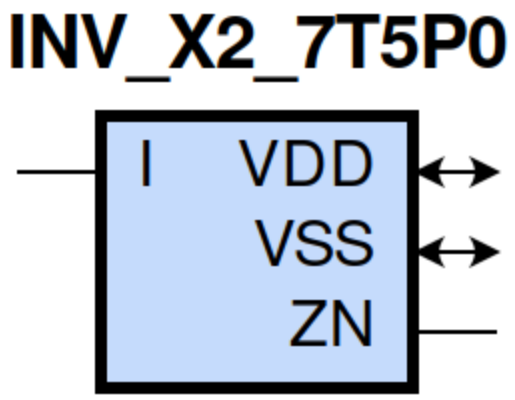

gf180mcu_fd_sc_mcu7t5v0__inv_2 schematic

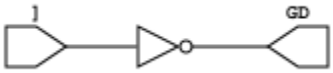

gf180mcu_fd_sc_mcu7t5v0__inv_2 layout

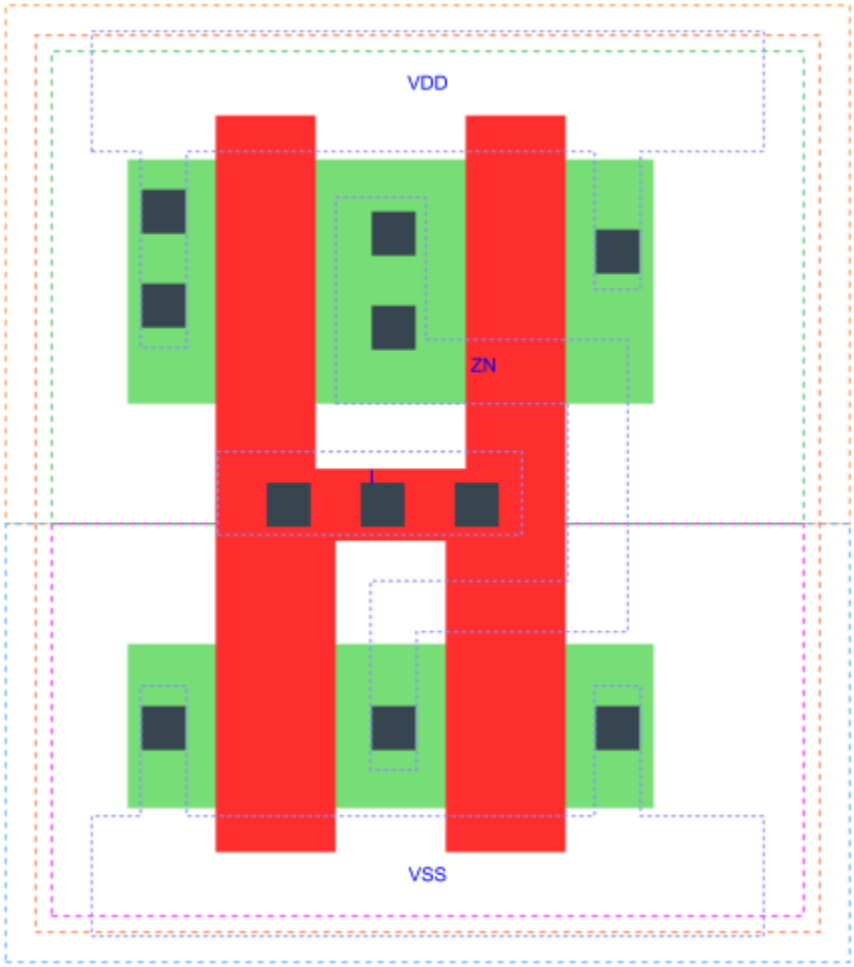

INV_X2 is an inverter, 2X drive strength

Attributes

Attribute	Value
area	13.171200 μm^2

OUTPUT FUNCTIONS

Output Pin	Function
ZN	(!I)

TRUTH TABLE FOR ZN

I	ZN
0	1
1	0

FUNCTIONAL SCHEMATIC

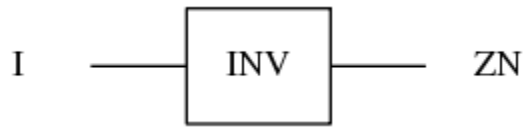

PIN CAPACITANCE (pf)

Pin	Type	Capacitance (pf)
I	input	0.0093

DELAY AND OUTPUT TRANSITION TIME corresponding to min slew and load

Input Pin	Output	When Condition	Tin (ns)	Out Load (pf)	Delay (ns)	Tout (ns)
I(LH)	ZN(HL)	default	0.0100	0.0010	0.0308	0.0134
I(HL)	ZN(LH)	default	0.0100	0.0010	0.0387	0.0235

DYNAMIC ENERGY

Input Pin	When Condition	Tin (ns)	Output	Out Load (pf)	Energy (uW/MHz)
I	default	0.0100	ZN(HL)	0.0010	-0.0169
I	default	0.0100	ZN(LH)	0.0010	0.1684

LEAKAGE POWER

When Condition	Power (nW)
!I	0.1009
I	0.1030

gf180mcu_fd_sc_mcu7t5v0__inv_x20

gf180mcu_fd_sc_mcu7t5v0__inv_x20 symbol

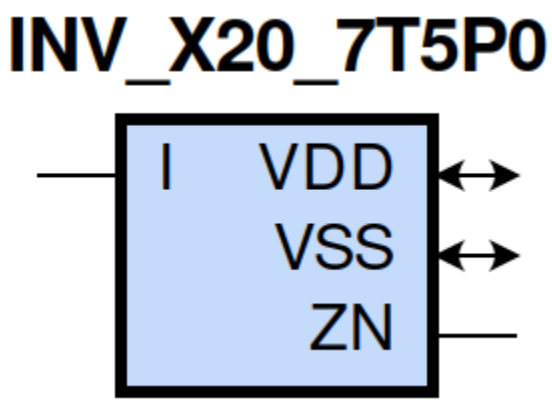

gf180mcu_fd_sc_mcu7t5v0__inv_x20 schematic

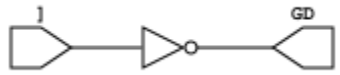

gf180mcu_fd_sc_mcu7t5v0__inv_x20 layout

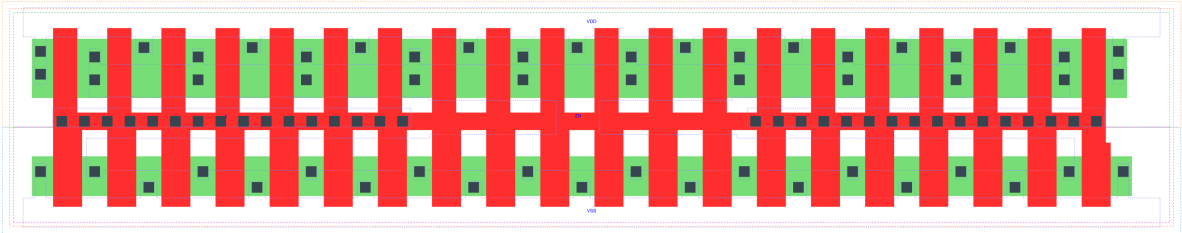

INV_X20 is an inverter, 20X drive strength

Attributes

Attribute	Value
area	92.198400 μm^2

OUTPUT FUNCTIONS

Output Pin	Function
ZN	(!I)

TRUTH TABLE FOR ZN

I	ZN
0	1
1	0

FUNCTIONAL SCHEMATIC

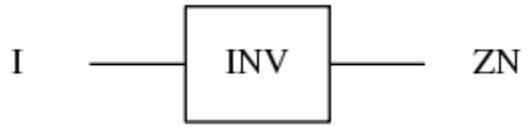

PIN CAPACITANCE (pf)

Pin	Type	Capacitance (pf)
I	input	0.0929

DELAY AND OUTPUT TRANSITION TIME corresponding to min slew and load

Input Pin	Output	When Condition	Tin (ns)	Out Load (pf)	Delay (ns)	Tout (ns)
I(LH)	ZN(HL)	default	0.0100	0.0010	0.0303	0.0114
I(HL)	ZN(LH)	default	0.0100	0.0010	0.0367	0.0202

DYNAMIC ENERGY

Input Pin	When Condition	Tin (ns)	Output	Out Load (pf)	Energy (uW/MHz)
I	default	0.0100	ZN(HL)	0.0010	-0.2122
I	default	0.0100	ZN(LH)	0.0010	1.7092

LEAKAGE POWER

When Condition	Power (nW)
!I	0.5589
I	0.5799

gf180mcu_fd_sc_mcu7t5v0__inv_3

gf180mcu_fd_sc_mcu7t5v0__inv_3 symbol

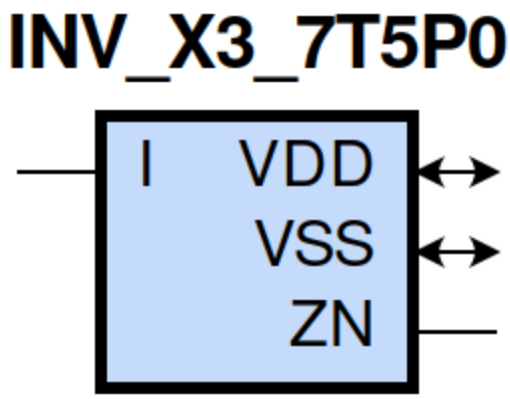

gf180mcu_fd_sc_mcu7t5v0__inv_3 schematic

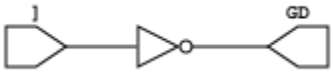

gf180mcu_fd_sc_mcu7t5v0__inv_3 layout

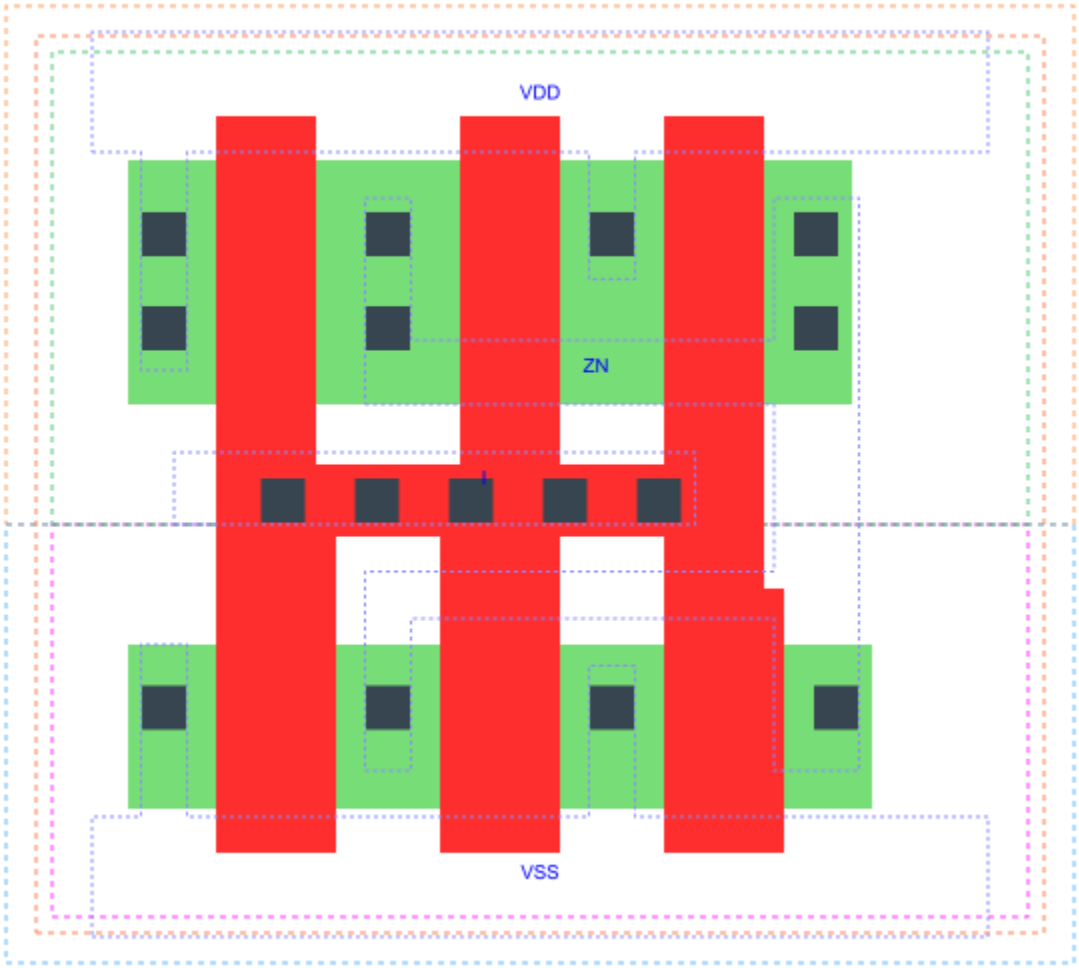

INV_X3 is an inverter, 3X drive strength

Attributes

Attribute	Value
area	17.561600 μm^2

OUTPUT FUNCTIONS

Output Pin	Function
ZN	(!I)

TRUTH TABLE FOR ZN

I	ZN
0	1
1	0

FUNCTIONAL SCHEMATIC

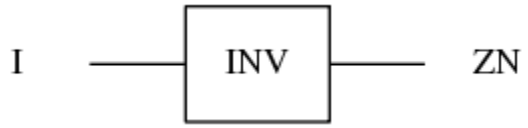

PIN CAPACITANCE (pf)

Pin	Type	Capacitance (pf)
I	input	0.0140

DELAY AND OUTPUT TRANSITION TIME corresponding to min slew and load

Input Pin	Output	When Condition	Tin (ns)	Out Load (pf)	Delay (ns)	Tout (ns)
I(LH)	ZN(HL)	default	0.0100	0.0010	0.0309	0.0135
I(HL)	ZN(LH)	default	0.0100	0.0010	0.0388	0.0237

DYNAMIC ENERGY

Input Pin	When Condition	Tin (ns)	Output	Out Load (pf)	Energy (uW/MHz)
I	default	0.0100	ZN(HL)	0.0010	-0.0205
I	default	0.0100	ZN(LH)	0.0010	0.2613

LEAKAGE POWER

When Condition	Power (nW)
!I	0.1263
I	0.1295

gf180mcu_fd_sc_mcu7t5v0__inv_4

gf180mcu_fd_sc_mcu7t5v0__inv_4 symbol

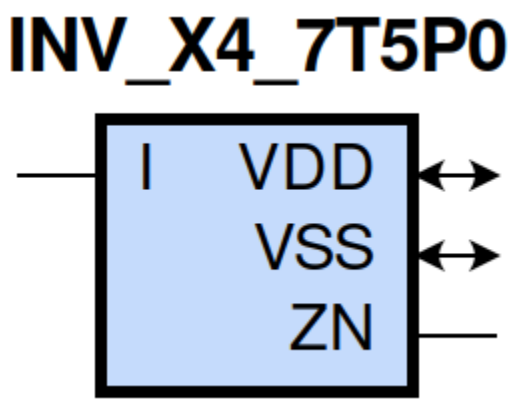

gf180mcu_fd_sc_mcu7t5v0__inv_4 schematic

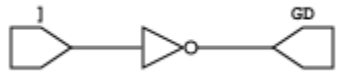

gf180mcu_fd_sc_mcu7t5v0__inv_4 layout

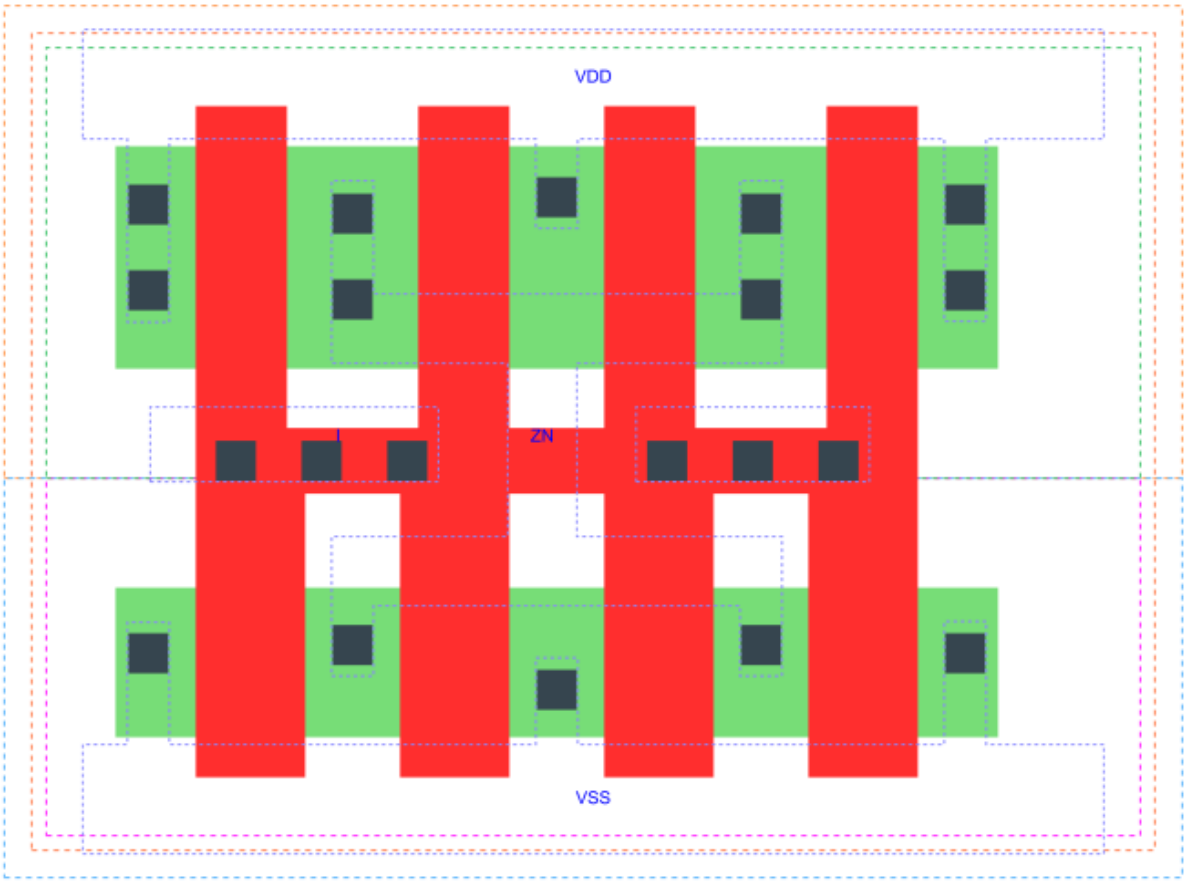

INV_X4 is an inverter, 4X drive strength

Attributes

Attribute	Value
area	21.952000 μm^2

OUTPUT FUNCTIONS

Output Pin	Function
ZN	(!I)

TRUTH TABLE FOR ZN

I	ZN
0	1
1	0

FUNCTIONAL SCHEMATIC

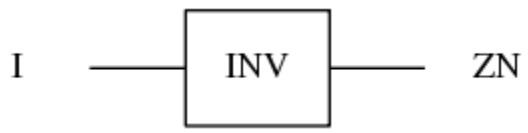

PIN CAPACITANCE (pf)

Pin	Type	Capacitance (pf)
I	input	0.0185

DELAY AND OUTPUT TRANSITION TIME corresponding to min slew and load

Input Pin	Output	When Condition	Tin (ns)	Out Load (pf)	Delay (ns)	Tout (ns)
I(LH)	ZN(HL)	default	0.0100	0.0010	0.0282	0.0114
I(HL)	ZN(LH)	default	0.0100	0.0010	0.0345	0.0201

DYNAMIC ENERGY

Input Pin	When Condition	Tin (ns)	Output	Out Load (pf)	Energy (uW/MHz)
I	default	0.0100	ZN(HL)	0.0010	-0.0368
I	default	0.0100	ZN(LH)	0.0010	0.3192

LEAKAGE POWER

When Condition	Power (nW)
!I	0.1518
I	0.1560

gf180mcu_fd_sc_mcu7t5v0__inv_8

gf180mcu_fd_sc_mcu7t5v0__inv_8 symbol

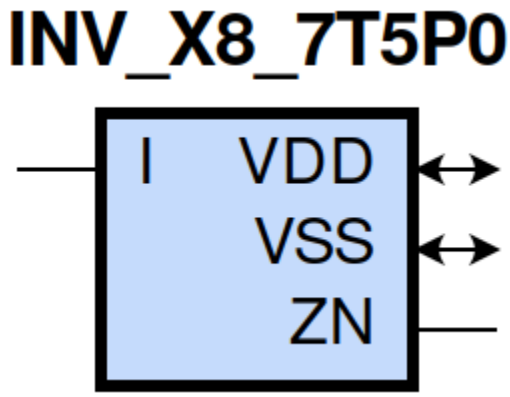

gf180mcu_fd_sc_mcu7t5v0__inv_8 schematic

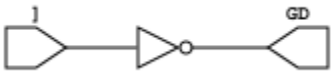

gf180mcu_fd_sc_mcu7t5v0__inv_8 layout

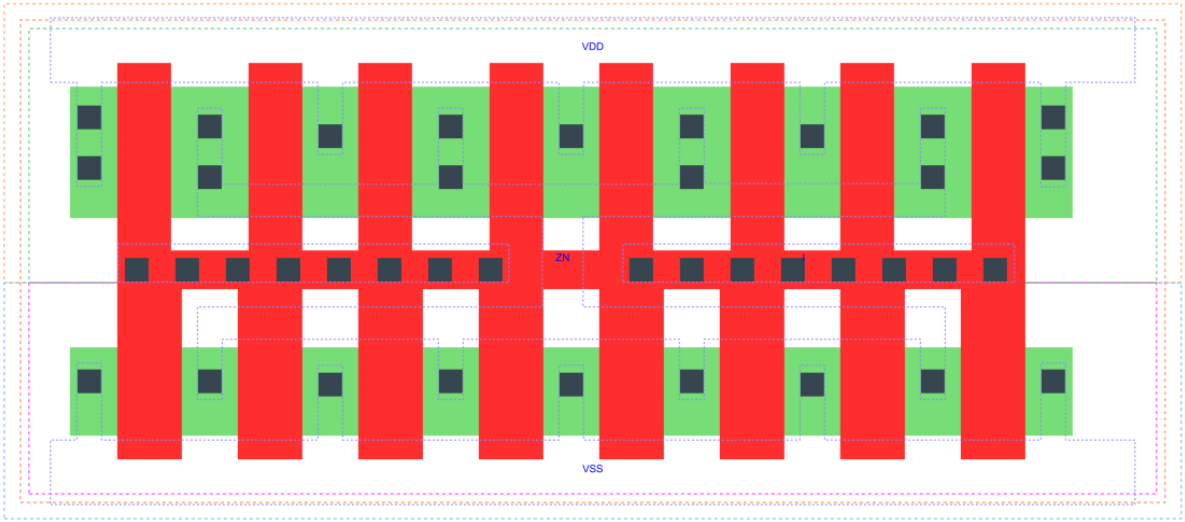

INV_X8 is an inverter, 8X drive strength

Attributes

Attribute	Value
area	39.513600 μm^2

OUTPUT FUNCTIONS

Output Pin	Function
ZN	(!I)

TRUTH TABLE FOR ZN

I	ZN
0	1
1	0

FUNCTIONAL SCHEMATIC

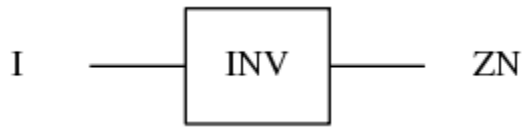

PIN CAPACITANCE (pf)

Pin	Type	Capacitance (pf)
I	input	0.0373

DELAY AND OUTPUT TRANSITION TIME corresponding to min slew and load

Input Pin	Output	When Condition	Tin (ns)	Out Load (pf)	Delay (ns)	Tout (ns)
I(LH)	ZN(HL)	default	0.0100	0.0010	0.0282	0.0112
I(HL)	ZN(LH)	default	0.0100	0.0010	0.0344	0.0200

DYNAMIC ENERGY

Input Pin	When Condition	Tin (ns)	Output	Out Load (pf)	Energy (uW/MHz)
I	default	0.0100	ZN(HL)	0.0010	-0.0741
I	default	0.0100	ZN(LH)	0.0010	0.6588

LEAKAGE POWER

When Condition	Power (nW)
!I	0.2536
I	0.2620

gf180mcu_fd_sc_mcu7t5v0__invz_1

gf180mcu_fd_sc_mcu7t5v0__invz_1 symbol

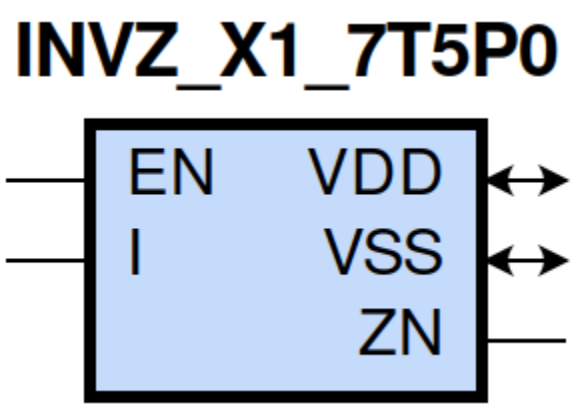

gf180mcu_fd_sc_mcu7t5v0__invz_1 schematic

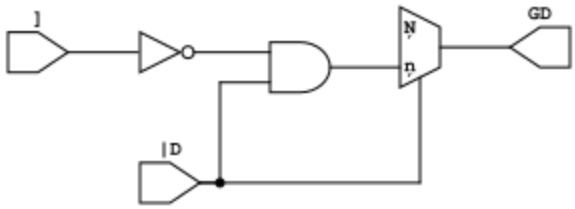

gf180mcu_fd_sc_mcu7t5v0__invz_1 layout

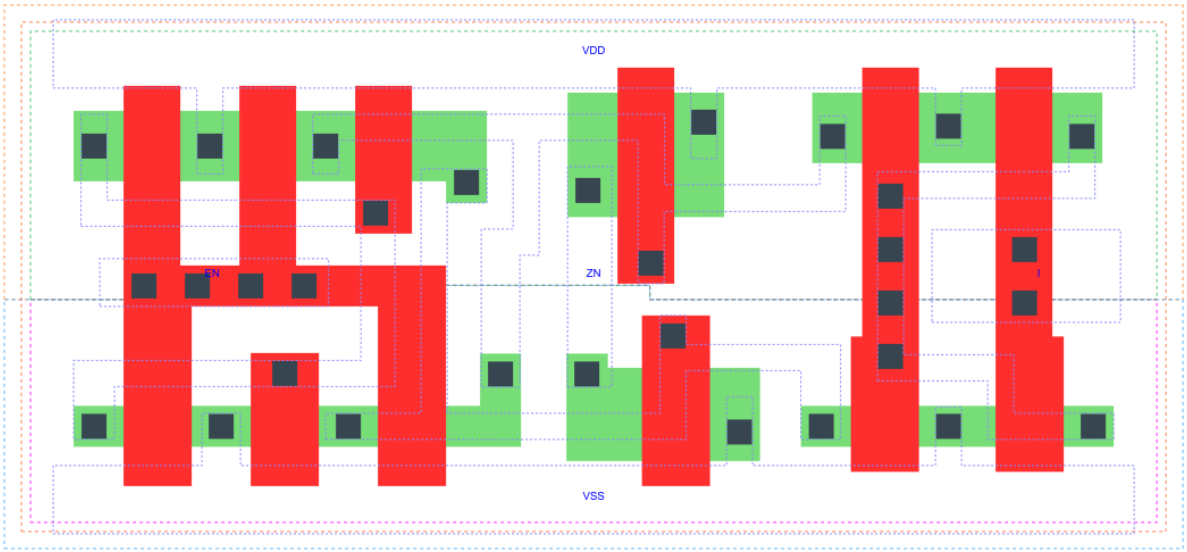

INVZ_X1 is a tri-state inverter, 1X drive strength | | Attributes

Attribute	Value
area	37.318400 μm^2

OUTPUT FUNCTIONS

Output Pin	Function
ZN	(!I)

TRUTH TABLE FOR ZN

EN	I	ZN
1	0	1
1	1	0
0	?	z

FUNCTIONAL SCHEMATIC

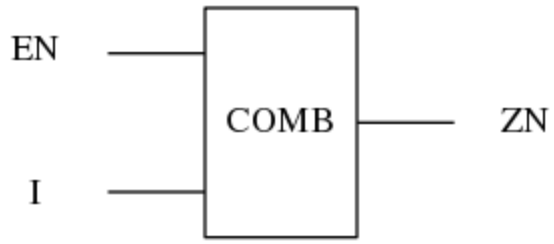

PIN CAPACITANCE (pf)

Pin	Type	Capacitance (pf)
EN	input	0.0059
I	input	0.0031

DELAY AND OUTPUT TRANSITION TIME corresponding to min slew and load

Input Pin	Output	When Condition	Tin (ns)	Out Load (pf)	Delay (ns)	Tout (ns)
EN(LH)	ZN(ZL)	I	0.0100	0.0010	0.1906	0.0525
EN(LH)	ZN(ZH)	!I	0.0100	0.0010	0.1743	0.0557
EN(HL)	ZN(HZ)	!I	0.0100		0.1650	0.0000
EN(HL)	ZN(LZ)	I	0.0100		0.2530	0.0000
I(LH)	ZN(HL)	EN	0.0100	0.0010	0.3949	0.0602
I(HL)	ZN(LH)	EN	0.0100	0.0010	0.4291	0.0579

DYNAMIC ENERGY

Input Pin	When Condition	Tin (ns)	Output	Out Load (pf)	Energy (uW/MHz)
I	EN	0.0100	ZN(HL)	0.0010	0.3262
I	EN	0.0100	ZN(LH)	0.0010	0.2671
EN	I	0.0100	ZN(HL)	0.0010	0.1966
EN(HL)	I	0.0100	n/a	n/a	0.1698
EN(HL)	!I	0.0100	n/a	n/a	0.2411
EN	!I	0.0100	ZN(LH)	0.0010	0.1092
I(LH)	!EN	0.0100	n/a	n/a	0.0210
I(HL)	!EN	0.0100	n/a	n/a	0.1055

LEAKAGE POWER

When Condition	Power (nW)
!EN&!I	0.1718
!EN&I	0.1704
EN&!I	0.2314
EN&I	0.2338

gf180mcu_fd_sc_mcu7t5v0__invz_x12

gf180mcu_fd_sc_mcu7t5v0__invz_x12 symbol

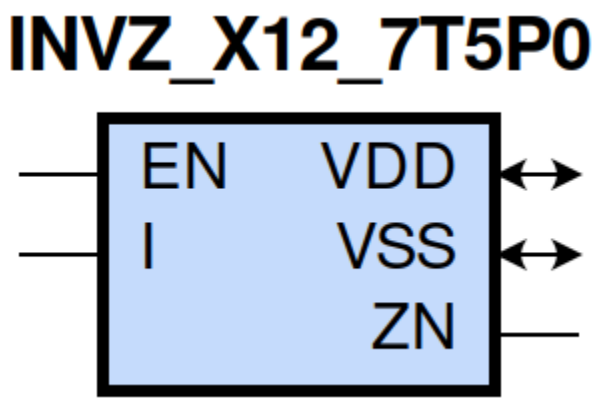

gf180mcu_fd_sc_mcu7t5v0__invz_x12 schematic

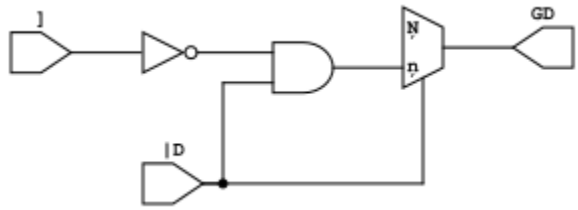

gf180mcu_fd_sc_mcu7t5v0__invz_x12 layout

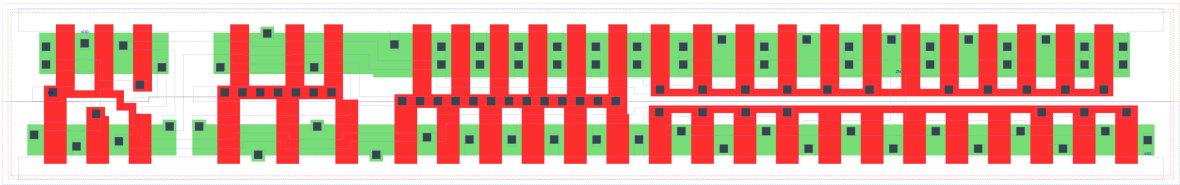

INVZ_X12 is a tri-state inverter, 12X drive strength

Attributes

Attribute	Value
area	118.540800 μm^2

OUTPUT FUNCTIONS

Output Pin	Function
ZN	(!I)

TRUTH TABLE FOR ZN

EN	I	ZN
1	0	1
1	1	0
0	?	z

FUNCTIONAL SCHEMATIC

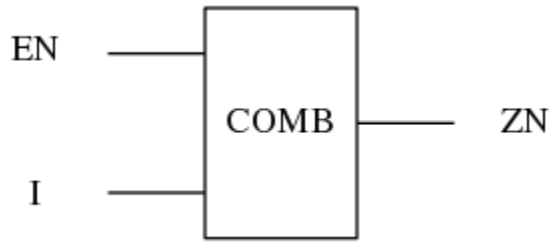

PIN CAPACITANCE (pf)

Pin	Type	Capacitance (pf)
EN	input	0.0090
I	input	0.0137

DELAY AND OUTPUT TRANSITION TIME corresponding to min slew and load

Input Pin	Output	When Condition	Tin (ns)	Out Load (pf)	Delay (ns)	Tout (ns)
EN(LH)	ZN(ZL)	I	0.0100	0.0010	0.1855	0.0460
EN(LH)	ZN(ZH)	!I	0.0100	0.0010	0.2232	0.0555
EN(HL)	ZN(HZ)	!I	0.0100		0.5190	0.0000
EN(HL)	ZN(LZ)	I	0.0100		0.3910	0.0000
I(LH)	ZN(HL)	EN	0.0100	0.0010	0.3249	0.0446
I(HL)	ZN(LH)	EN	0.0100	0.0010	0.4067	0.0531

DYNAMIC ENERGY

Input Pin	When Condition	Tin (ns)	Output	Out Load (pf)	Energy (uW/MHz)
I	EN	0.0100	ZN(HL)	0.0010	1.8073
I	EN	0.0100	ZN(LH)	0.0010	1.7887
EN	I	0.0100	ZN(HL)	0.0010	1.0784
EN(HL)	I	0.0100	n/a	n/a	0.2443
EN(HL)	!I	0.0100	n/a	n/a	0.5934
EN	!I	0.0100	ZN(LH)	0.0010	0.9881
I(LH)	!EN	0.0100	n/a	n/a	0.2119
I(HL)	!EN	0.0100	n/a	n/a	0.6242

LEAKAGE POWER

When Condition	Power (nW)
!EN&!I	0.3590
!EN&I	0.3619
EN&!I	0.6934
EN&I	0.7014

gf180mcu_fd_sc_mcu7t5v0__invz_x16

gf180mcu_fd_sc_mcu7t5v0__invz_x16 symbol

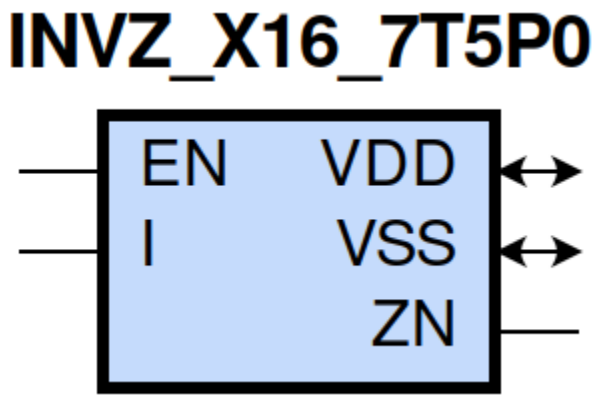

gf180mcu_fd_sc_mcu7t5v0__invz_x16 schematic

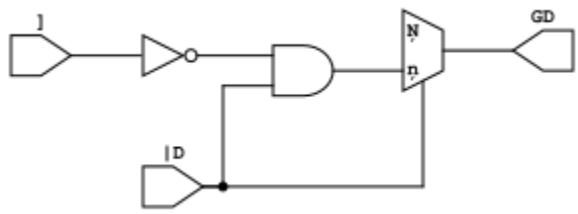

gf180mcu_fd_sc_mcu7t5v0__invz_x16 layout

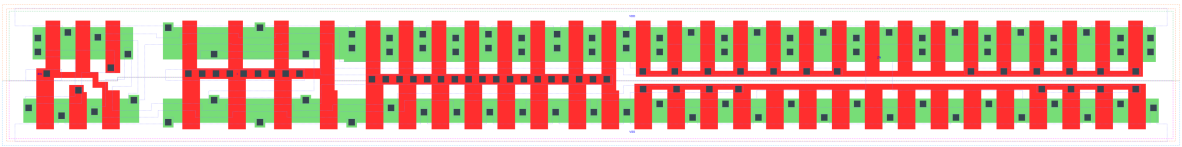

INVZ_X16 is a tri-state inverter, 16X drive strength

Attributes

Attribute	Value
area	153.664000 μm^2

OUTPUT FUNCTIONS

Output Pin	Function
ZN	(!I)

TRUTH TABLE FOR ZN

EN	I	ZN
1	0	1
1	1	0
0	?	z

FUNCTIONAL SCHEMATIC

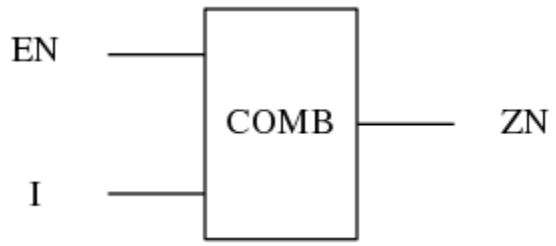

PIN CAPACITANCE (pf)

Pin	Type	Capacitance (pf)
EN	input	0.0090
I	input	0.0181

DELAY AND OUTPUT TRANSITION TIME corresponding to min slew and load

Input Pin	Output	When Condition	Tin (ns)	Out Load (pf)	Delay (ns)	Tout (ns)
EN(LH)	ZN(ZL)	I	0.0100	0.0010	0.2097	0.0527
EN(LH)	ZN(ZH)	!I	0.0100	0.0010	0.2621	0.0648
EN(HL)	ZN(HZ)	!I	0.0100		0.6750	0.0000
EN(HL)	ZN(LZ)	I	0.0100		0.4670	0.0000
I(LH)	ZN(HL)	EN	0.0100	0.0010	0.3480	0.0505
I(HL)	ZN(LH)	EN	0.0100	0.0010	0.4443	0.0616

DYNAMIC ENERGY

Input Pin	When Condition	Tin (ns)	Output	Out Load (pf)	Energy (uW/MHz)
I	EN	0.0100	ZN(HL)	0.0010	2.3424
I	EN	0.0100	ZN(LH)	0.0010	2.3656
EN	I	0.0100	ZN(HL)	0.0010	1.4016
EN(HL)	I	0.0100	n/a	n/a	0.2490
EN(HL)	!I	0.0100	n/a	n/a	0.6917
EN	!I	0.0100	ZN(LH)	0.0010	1.3432
I(LH)	!EN	0.0100	n/a	n/a	0.2972
I(HL)	!EN	0.0100	n/a	n/a	0.8016

LEAKAGE POWER

When Condition	Power (nW)
!EN&!I	0.4362
!EN&I	0.4401
EN&!I	0.8735
EN&I	0.8846

gf180mcu_fd_sc_mcu7t5v0__invz_2

gf180mcu_fd_sc_mcu7t5v0__invz_2 symbol

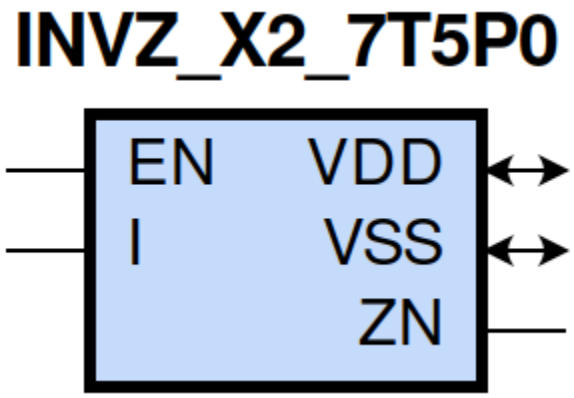

gf180mcu_fd_sc_mcu7t5v0__invz_2 schematic

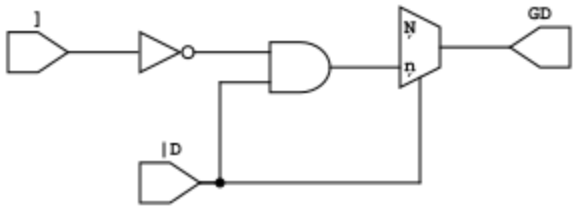

gf180mcu_fd_sc_mcu7t5v0__invz_2 layout

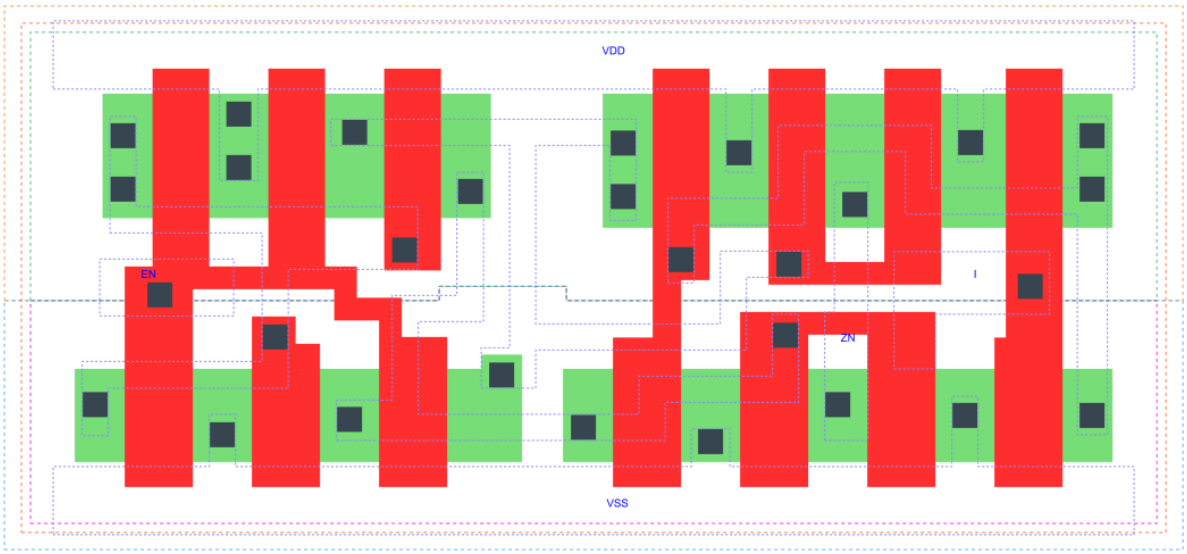

INVZ_X2 is a tri-state inverter, 2X drive strength | | Attributes

Attribute	Value
area	37.318400 μm^2

OUTPUT FUNCTIONS

Output Pin	Function
ZN	(!I)

TRUTH TABLE FOR ZN

EN	I	ZN
1	0	1
1	1	0
0	?	z

FUNCTIONAL SCHEMATIC

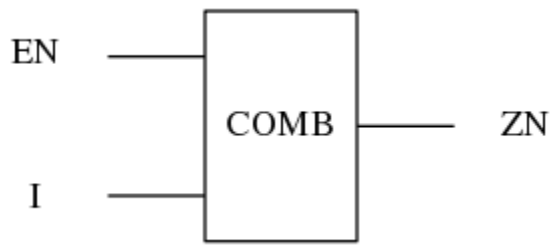

PIN CAPACITANCE (pf)

Pin	Type	Capacitance (pf)
EN	input	0.0092
I	input	0.0050

DELAY AND OUTPUT TRANSITION TIME corresponding to min slew and load

Input Pin	Output	When Condition	Tin (ns)	Out Load (pf)	Delay (ns)	Tout (ns)
EN(LH)	ZN(ZL)	I	0.0100	0.0010	0.1384	0.0361
EN(LH)	ZN(ZH)	!I	0.0100	0.0010	0.1202	0.0345
EN(HL)	ZN(HZ)	!I	0.0100		0.1460	0.0000
EN(HL)	ZN(LZ)	I	0.0100		0.2000	0.0000
I(LH)	ZN(HL)	EN	0.0100	0.0010	0.3154	0.0419
I(HL)	ZN(LH)	EN	0.0100	0.0010	0.3296	0.0368

DYNAMIC ENERGY

Input Pin	When Condition	Tin (ns)	Output	Out Load (pf)	Energy (uW/MHz)
I	EN	0.0100	ZN(HL)	0.0010	0.5136
I	EN	0.0100	ZN(LH)	0.0010	0.4244
EN	I	0.0100	ZN(HL)	0.0010	0.3084
EN(HL)	I	0.0100	n/a	n/a	0.2464
EN(HL)	!I	0.0100	n/a	n/a	0.3425
EN	!I	0.0100	ZN(LH)	0.0010	0.1718
I(LH)	!EN	0.0100	n/a	n/a	0.0371
I(HL)	!EN	0.0100	n/a	n/a	0.1695

LEAKAGE POWER

When Condition	Power (nW)
!EN&!I	0.1787
!EN&I	0.1797
EN&!I	0.2557
EN&I	0.2567

gf180mcu_fd_sc_mcu7t5v0__invz_3

gf180mcu_fd_sc_mcu7t5v0__invz_3 symbol

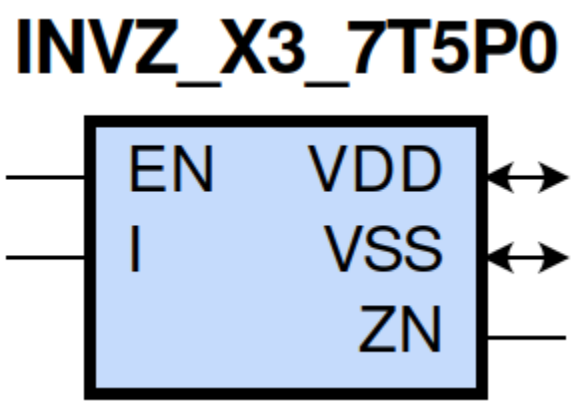

gf180mcu_fd_sc_mcu7t5v0__invz_3 schematic

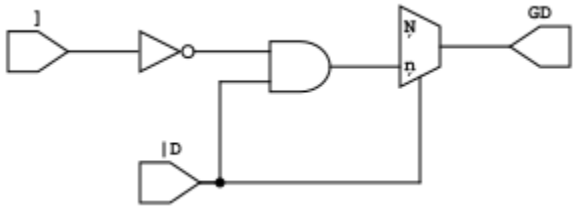

gf180mcu_fd_sc_mcu7t5v0__invz_3 layout

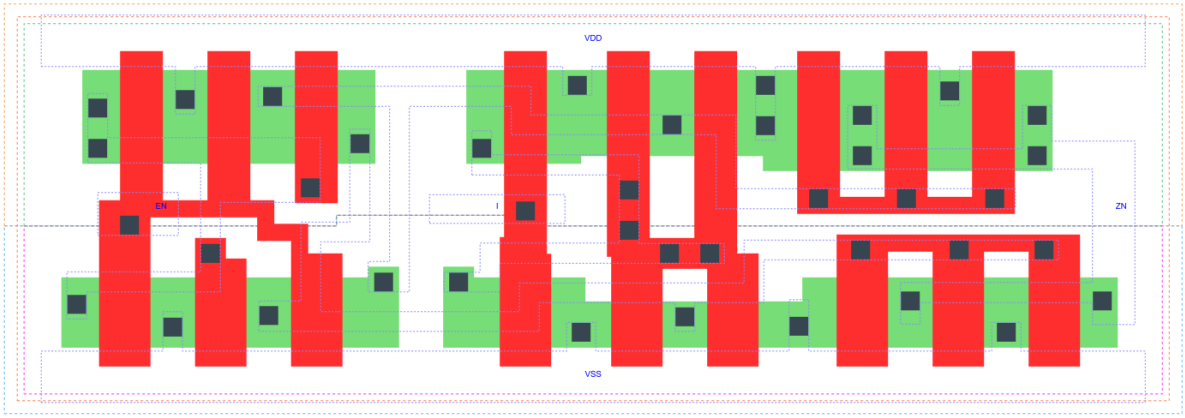

INVZ_X3 is a tri-state inverter, 3X drive strength | | Attributes

Attribute	Value
area	50.489600 μm^2

OUTPUT FUNCTIONS

Output Pin	Function
ZN	(!I)

TRUTH TABLE FOR ZN

EN	I	ZN
1	0	1
1	1	0
0	?	z

FUNCTIONAL SCHEMATIC

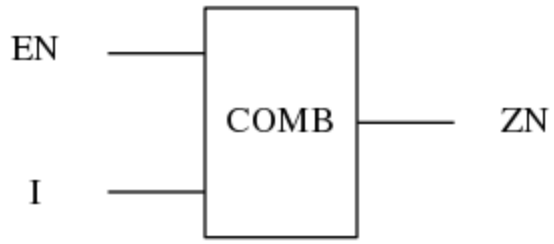

PIN CAPACITANCE (pf)

Pin	Type	Capacitance (pf)
EN	input	0.0090
I	input	0.0047

DELAY AND OUTPUT TRANSITION TIME corresponding to min slew and load

Input Pin	Output	When Condition	Tin (ns)	Out Load (pf)	Delay (ns)	Tout (ns)
EN(LH)	ZN(ZL)	I	0.0100	0.0010	0.1444	0.0370
EN(LH)	ZN(ZH)	!I	0.0100	0.0010	0.1411	0.0403
EN(HL)	ZN(HZ)	!I	0.0100		0.1860	0.0000
EN(HL)	ZN(LZ)	I	0.0100		0.2230	0.0000
I(LH)	ZN(HL)	EN	0.0100	0.0010	0.2996	0.0393
I(HL)	ZN(LH)	EN	0.0100	0.0010	0.3711	0.0412

DYNAMIC ENERGY

Input Pin	When Condition	Tin (ns)	Output	Out Load (pf)	Energy (uW/MHz)
I	EN	0.0100	ZN(HL)	0.0010	0.6696
I	EN	0.0100	ZN(LH)	0.0010	0.5615
EN	I	0.0100	ZN(HL)	0.0010	0.3879
EN(HL)	I	0.0100	n/a	n/a	0.2451
EN(HL)	!I	0.0100	n/a	n/a	0.3791
EN	!I	0.0100	ZN(LH)	0.0010	0.2705
I(LH)	!EN	0.0100	n/a	n/a	0.0642
I(HL)	!EN	0.0100	n/a	n/a	0.1948

LEAKAGE POWER

When Condition	Power (nW)
!EN&!I	0.1902
!EN&I	0.1912
EN&!I	0.3074
EN&I	0.3088

gf180mcu_fd_sc_mcu7t5v0__invz_4

gf180mcu_fd_sc_mcu7t5v0__invz_4 symbol

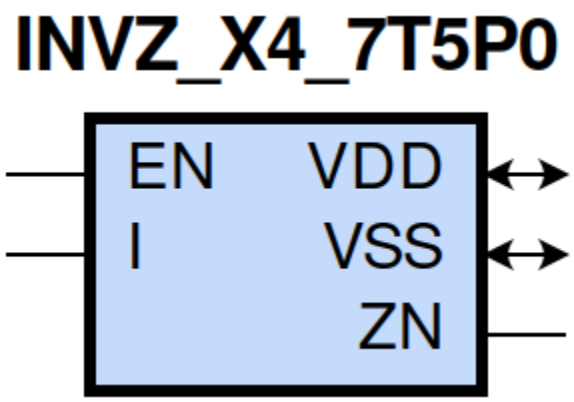

gf180mcu_fd_sc_mcu7t5v0__invz_4 schematic

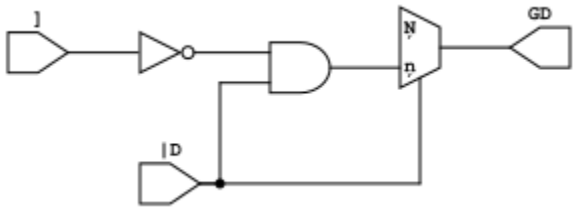

gf180mcu_fd_sc_mcu7t5v0__invz_4 layout

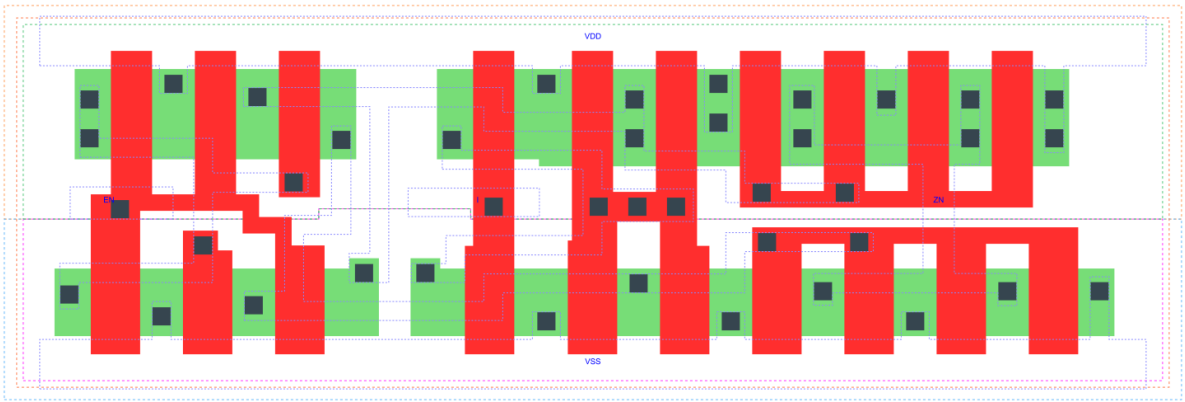

INVZ_X4 is a tri-state inverter, 4X drive strength | | Attributes

Attribute	Value
area	52.684800 μm^2

OUTPUT FUNCTIONS

Output Pin	Function
ZN	(!I)

TRUTH TABLE FOR ZN

EN	I	ZN
1	0	1
1	1	0
0	?	z

FUNCTIONAL SCHEMATIC

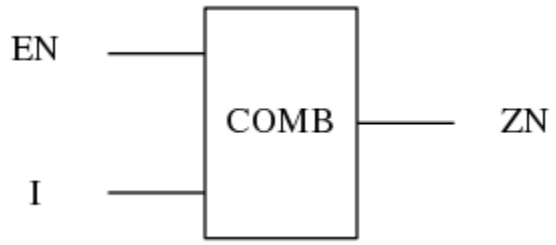

PIN CAPACITANCE (pf)

Pin	Type	Capacitance (pf)
EN	input	0.0090
I	input	0.0047

DELAY AND OUTPUT TRANSITION TIME corresponding to min slew and load

Input Pin	Output	When Condition	Tin (ns)	Out Load (pf)	Delay (ns)	Tout (ns)
EN(LH)	ZN(ZL)	I	0.0100	0.0010	0.1389	0.0339
EN(LH)	ZN(ZH)	!I	0.0100	0.0010	0.1394	0.0366
EN(HL)	ZN(HZ)	!I	0.0100		0.2140	0.0000
EN(HL)	ZN(LZ)	I	0.0100		0.2350	0.0000
I(LH)	ZN(HL)	EN	0.0100	0.0010	0.3050	0.0359
I(HL)	ZN(LH)	EN	0.0100	0.0010	0.3537	0.0370

DYNAMIC ENERGY

Input Pin	When Condition	Tin (ns)	Output	Out Load (pf)	Energy (uW/MHz)
I	EN	0.0100	ZN(HL)	0.0010	0.7707
I	EN	0.0100	ZN(LH)	0.0010	0.6400
EN	I	0.0100	ZN(HL)	0.0010	0.4374
EN(HL)	I	0.0100	n/a	n/a	0.2428
EN(HL)	!I	0.0100	n/a	n/a	0.3906
EN	!I	0.0100	ZN(LH)	0.0010	0.3221
I(LH)	!EN	0.0100	n/a	n/a	0.0760
I(HL)	!EN	0.0100	n/a	n/a	0.2188

LEAKAGE POWER

When Condition	Power (nW)
!EN&!I	0.2047
!EN&I	0.2056
EN&!I	0.3330
EN&I	0.3351

gf180mcu_fd_sc_mcu7t5v0__invz_8

gf180mcu_fd_sc_mcu7t5v0__invz_8 symbol

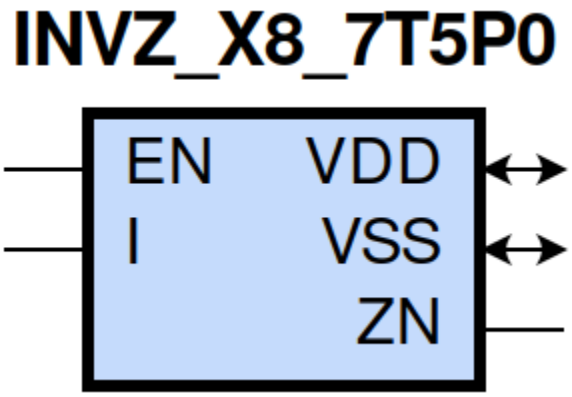

gf180mcu_fd_sc_mcu7t5v0__invz_8 schematic

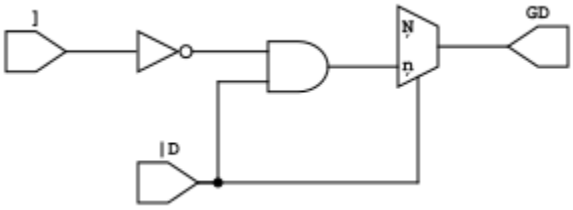

gf180mcu_fd_sc_mcu7t5v0__invz_8 layout

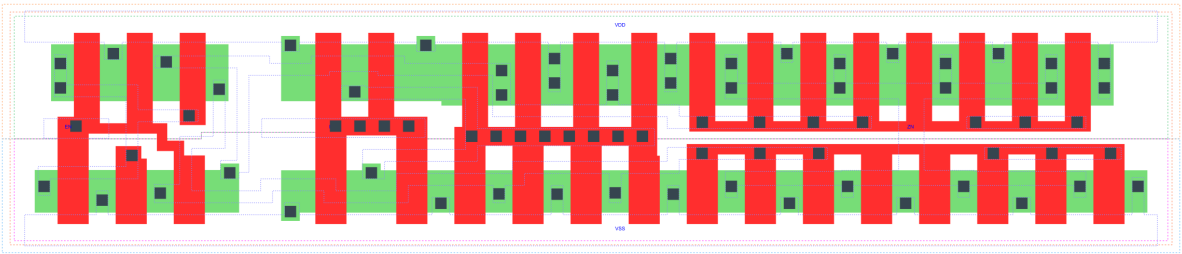

INVZ_X8 is a tri-state inverter, 8X drive strength | | Attributes

Attribute	Value
area	85.612800 μm^2

OUTPUT FUNCTIONS

Output Pin	Function
ZN	(!I)

TRUTH TABLE FOR ZN

EN	I	ZN
1	0	1
1	1	0
0	?	z

FUNCTIONAL SCHEMATIC

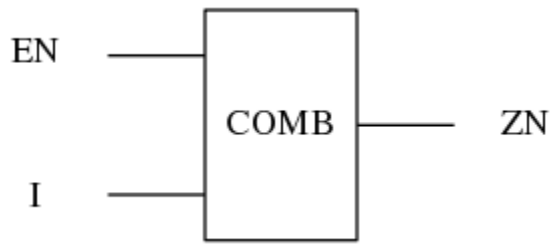

PIN CAPACITANCE (pf)

Pin	Type	Capacitance (pf)
EN	input	0.0090
I	input	0.0092

DELAY AND OUTPUT TRANSITION TIME corresponding to min slew and load

Input Pin	Output	When Condition	Tin (ns)	Out Load (pf)	Delay (ns)	Tout (ns)
EN(LH)	ZN(ZL)	I	0.0100	0.0010	0.1629	0.0397
EN(LH)	ZN(ZH)	!I	0.0100	0.0010	0.1826	0.0457
EN(HL)	ZN(HZ)	!I	0.0100		0.3630	0.0000
EN(HL)	ZN(LZ)	I	0.0100		0.3170	0.0000
I(LH)	ZN(HL)	EN	0.0100	0.0010	0.3016	0.0388
I(HL)	ZN(LH)	EN	0.0100	0.0010	0.3640	0.0445

DYNAMIC ENERGY

Input Pin	When Condition	Tin (ns)	Output	Out Load (pf)	Energy (uW/MHz)
I	EN	0.0100	ZN(HL)	0.0010	1.2755
I	EN	0.0100	ZN(LH)	0.0010	1.1823
EN	I	0.0100	ZN(HL)	0.0010	0.7587
EN(HL)	I	0.0100	n/a	n/a	0.2440
EN(HL)	!I	0.0100	n/a	n/a	0.4858
EN	!I	0.0100	ZN(LH)	0.0010	0.6525
I(LH)	!EN	0.0100	n/a	n/a	0.1359
I(HL)	!EN	0.0100	n/a	n/a	0.3976

LEAKAGE POWER

When Condition	Power (nW)
!EN&!I	0.2816
!EN&I	0.2836
EN&!I	0.5132
EN&I	0.5182

gf180mcu_fd_sc_mcu7t5v0__latq_1

gf180mcu_fd_sc_mcu7t5v0__latq_1 symbol

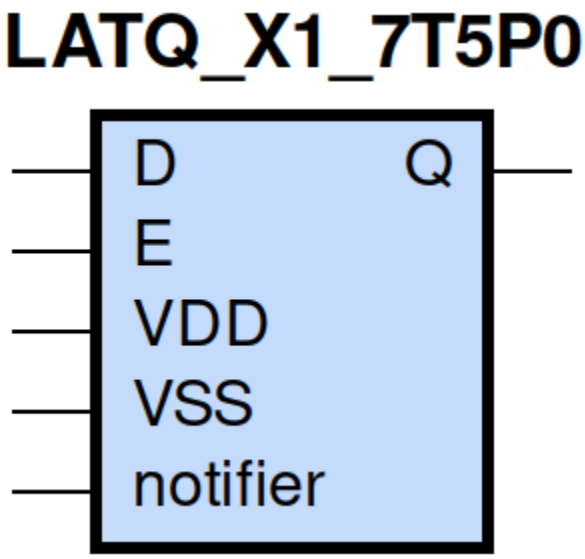

gf180mcu_fd_sc_mcu7t5v0__latq_1 schematic

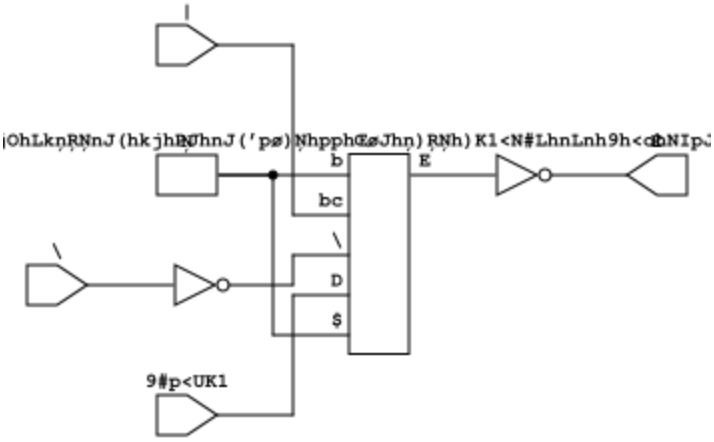

gf180mcu_fd_sc_mcu7t5v0__latq_1 layout

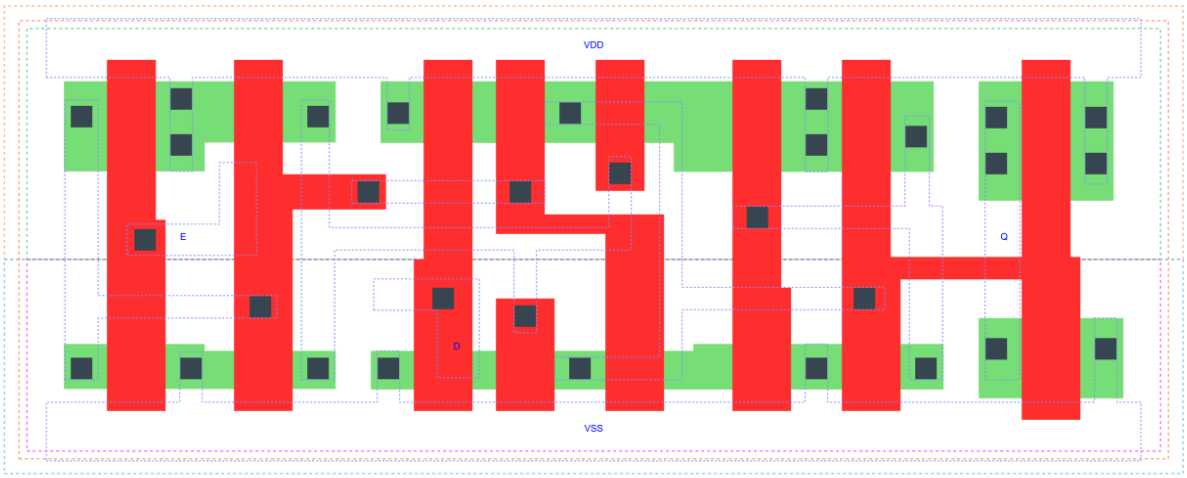

LATQ_X1 is a positive D-latch, 1X drive strength

Attributes

Attribute	Value
area	43.904000 μm^2

TRUTH TABLE

Input		Output
D	E	Q
L	H	L
H	H	H
X	L	Q

FUNCTIONAL SCHEMATIC

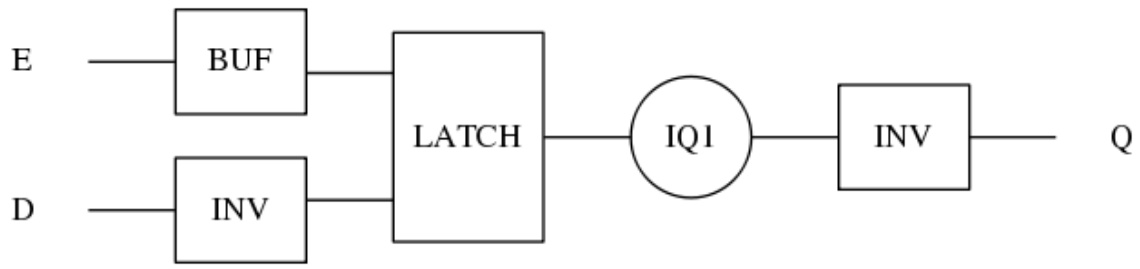

CONSTRAINTS

Constraint Pin	Related Pin	setup(ns)	hold(ns)
D(LH)	E(HL)	0.1660	-0.0860
D(HL)	E(HL)	0.5610	-0.3950

Constraint Pin	Related Pin	Minimum Pulse Width(ns)
E(LHL)	E(LH)	0.6120
E(LHL)	E(LH)	0.4170

PIN CAPACITANCE (pf)

Pin	Type	Capacitance (pf)
E	input	0.0037
D	input	0.0030

DELAY AND OUTPUT TRANSITION TIME corresponding to min slew and load

Input Pin	Output	When Condition	Tin (ns)	Out Load (pf)	Delay (ns)	Tout (ns)
E(LH)	Q(LH)	D	0.0100	0.0010	0.5578	0.0579
E(LH)	Q(HL)	!D	0.0100	0.0010	0.4988	0.0766
D(LH)	Q(LH)	E	0.0100	0.0010	0.3327	0.0580
D(HL)	Q(HL)	E	0.0100	0.0010	0.4429	0.0774

DYNAMIC ENERGY

Input Pin	When Condition	Tin (ns)	Output	Out Load (pf)	Energy (uW/MHz)
D	E	0.0100	Q(LH)	0.0010	0.3062
D	E	0.0100	Q(HL)	0.0010	0.4620
E	D	0.0100	Q(LH)	0.0010	0.4499
E	!D	0.0100	Q(HL)	0.0010	0.5495
E(LH)	!D	0.0100	n/a	n/a	0.1273
E(LH)	D	0.0100	n/a	n/a	0.1247
D(LH)	!E	0.0100	n/a	n/a	-0.0198
E(HL)	!D	0.0100	n/a	n/a	0.2239
E(HL)	D	0.0100	n/a	n/a	0.2283
D(HL)	!E	0.0100	n/a	n/a	0.0218

LEAKAGE POWER

When Condition	Power (nW)
!D&!E	0.3042
D&!E	0.3454
!D&E	0.2478
D&E	0.2423

gf180mcu_fd_sc_mcu7t5v0__latq_2

gf180mcu_fd_sc_mcu7t5v0__latq_2 symbol

LATQ_X2_7T5P0

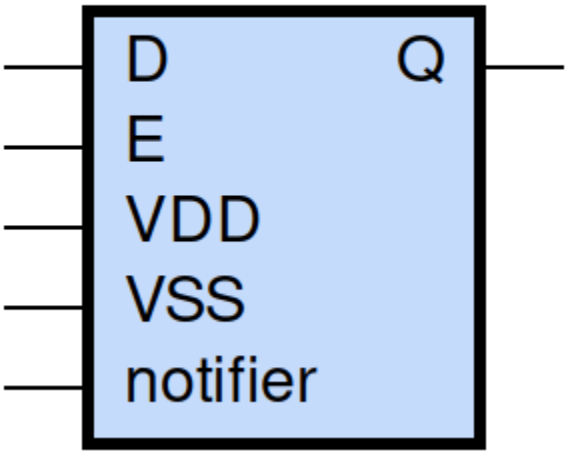

gf180mcu_fd_sc_mcu7t5v0__latq_2 schematic

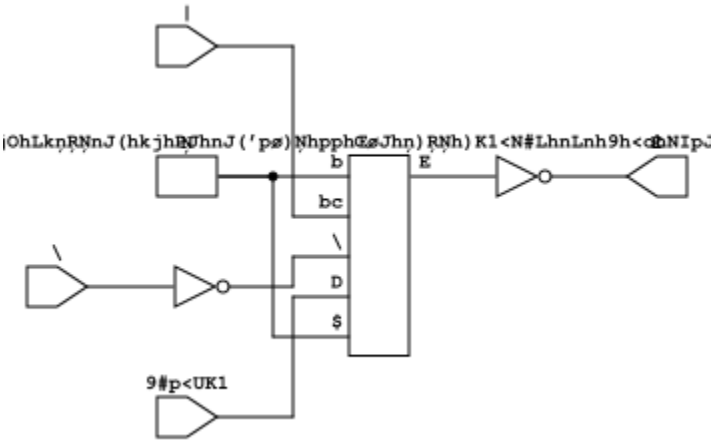

gf180mcu_fd_sc_mcu7t5v0__latq_2 layout

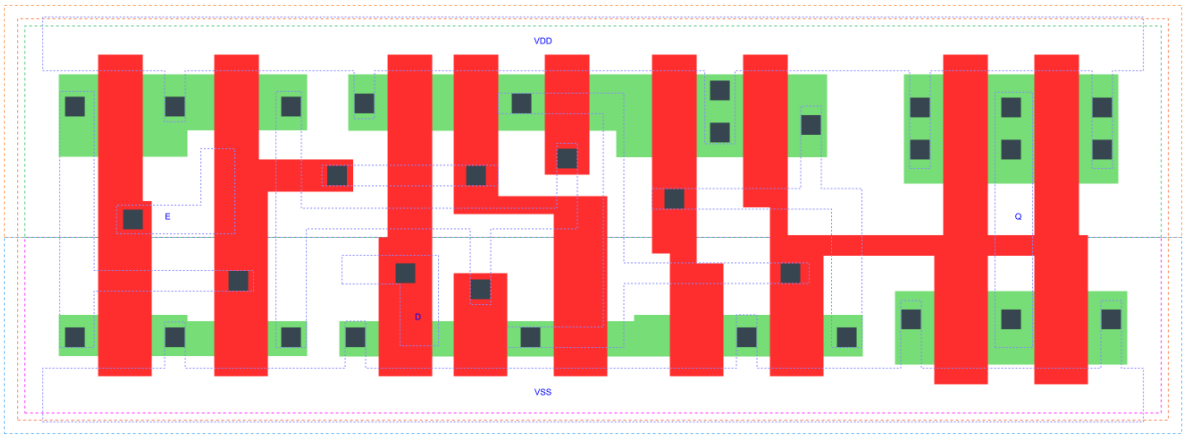

LATQ_X2 is a positive D-latch, 2X drive strength

Attributes

Attribute	Value
area	48.294400 μm^2

TRUTH TABLE

Input		Output
D	E	Q
L	H	L
H	H	H
X	L	Q

FUNCTIONAL SCHEMATIC

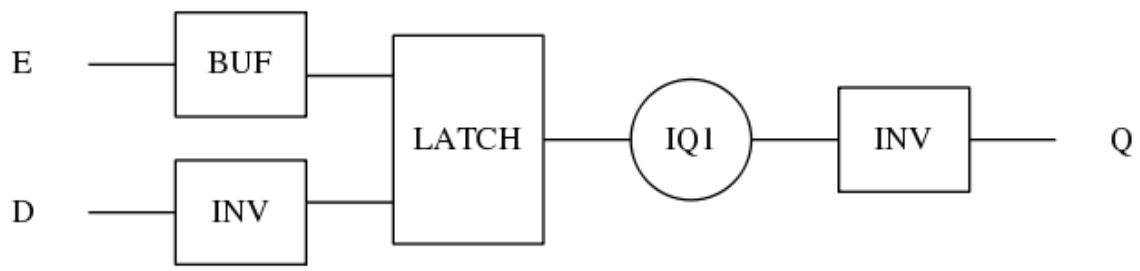

CONSTRAINTS

Constraint Pin	Related Pin	setup(ns)	hold(ns)
D(LH)	E(HL)	0.2400	-0.1600
D(HL)	E(HL)	0.6070	-0.5040

Constraint Pin	Related Pin	Minimum Pulse Width(ns)
E(LHL)	E(LH)	0.6610
E(LHL)	E(LH)	0.4850

PIN CAPACITANCE (pf)

Pin	Type	Capacitance (pf)
E	input	0.0037
D	input	0.0030

DELAY AND OUTPUT TRANSITION TIME corresponding to min slew and load

Input Pin	Output	When Condition	Tin (ns)	Out Load (pf)	Delay (ns)	Tout (ns)
E(LH)	Q(LH)	D	0.0100	0.0010	0.6136	0.0546
E(LH)	Q(HL)	!D	0.0100	0.0010	0.5855	0.0814
D(LH)	Q(LH)	E	0.0100	0.0010	0.3893	0.0547
D(HL)	Q(HL)	E	0.0100	0.0010	0.5293	0.0818

DYNAMIC ENERGY

Input Pin	When Condition	Tin (ns)	Output	Out Load (pf)	Energy (uW/MHz)
D	E	0.0100	Q(LH)	0.0010	0.4898
D	E	0.0100	Q(HL)	0.0010	0.7831
E	D	0.0100	Q(LH)	0.0010	0.6321
E	!D	0.0100	Q(HL)	0.0010	0.8705
E(LH)	!D	0.0100	n/a	n/a	0.1273
E(LH)	D	0.0100	n/a	n/a	0.1246
D(LH)	!E	0.0100	n/a	n/a	-0.0198
E(HL)	!D	0.0100	n/a	n/a	0.2244
E(HL)	D	0.0100	n/a	n/a	0.2257
D(HL)	!E	0.0100	n/a	n/a	0.0218

LEAKAGE POWER

When Condition	Power (nW)
!D&!E	0.3307
D&!E	0.3548
!D&E	0.2743
D&E	0.2677

gf180mcu_fd_sc_mcu7t5v0__latq_4

gf180mcu_fd_sc_mcu7t5v0__latq_4 symbol

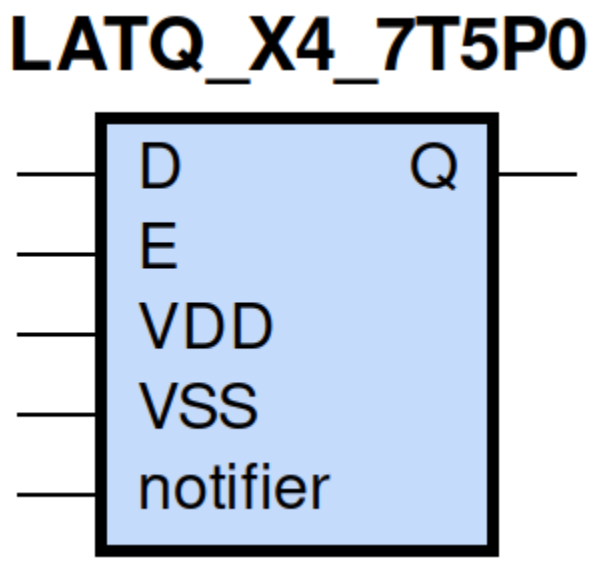

gf180mcu_fd_sc_mcu7t5v0__latq_4 schematic

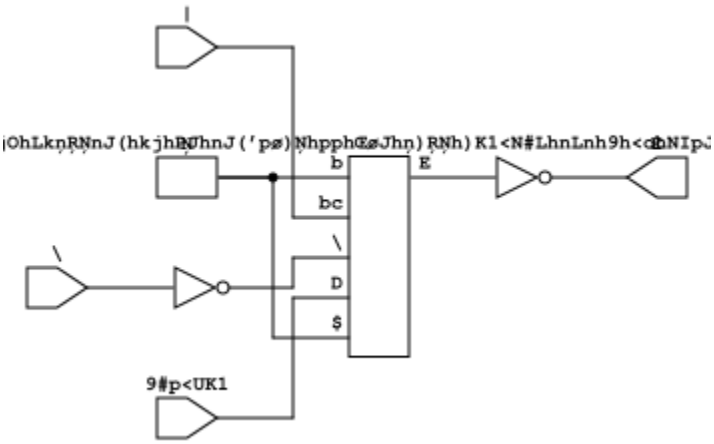

gf180mcu_fd_sc_mcu7t5v0__latq_4 layout

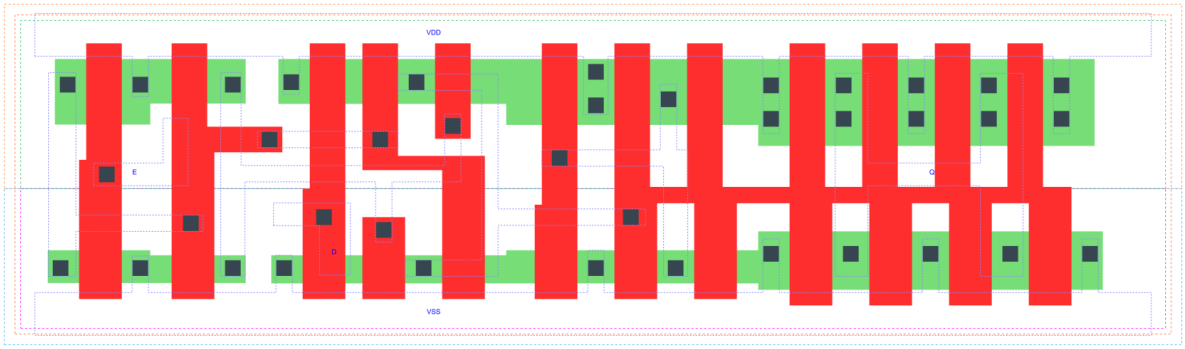

LATQ_X4 is a positive D-latch, 4X drive strength

Attributes

Attribute	Value
area	61.465600 μm^2

TRUTH TABLE

Input		Output
D	E	Q
L	H	L
H	H	H
X	L	Q

FUNCTIONAL SCHEMATIC

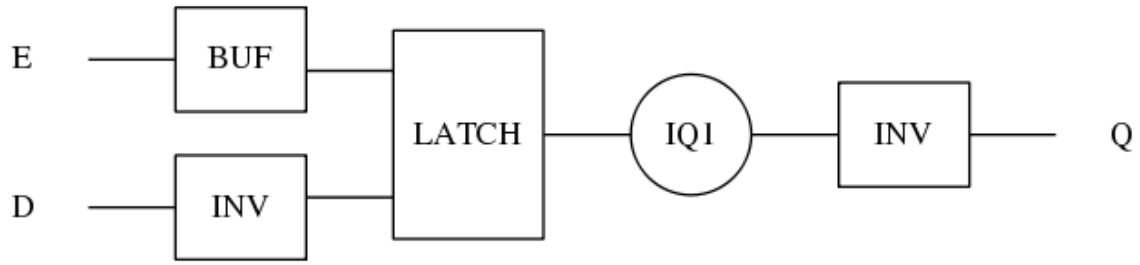

CONSTRAINTS

Constraint Pin	Related Pin	setup(ns)	hold(ns)
D(LH)	E(HL)	0.4060	-0.3260
D(HL)	E(HL)	0.8530	-0.7390

Constraint Pin	Related Pin	Minimum Pulse Width(ns)
E(LHL)	E(LH)	0.9150
E(LHL)	E(LH)	0.6420

PIN CAPACITANCE (pf)

Pin	Type	Capacitance (pf)
E	input	0.0037
D	input	0.0030

DELAY AND OUTPUT TRANSITION TIME corresponding to min slew and load

Input Pin	Output	When Condition	Tin (ns)	Out Load (pf)	Delay (ns)	Tout (ns)
E(LH)	Q(LH)	D	0.0100	0.0010	0.8139	0.0769
E(LH)	Q(HL)	!D	0.0100	0.0010	0.8816	0.1236
D(LH)	Q(LH)	E	0.0100	0.0010	0.5924	0.0772
D(HL)	Q(HL)	E	0.0100	0.0010	0.8242	0.1238

DYNAMIC ENERGY

Input Pin	When Condition	Tin (ns)	Output	Out Load (pf)	Energy (uW/MHz)
D	E	0.0100	Q(LH)	0.0010	1.2894
D	E	0.0100	Q(HL)	0.0010	2.1612
E	D	0.0100	Q(LH)	0.0010	1.4282
E	!D	0.0100	Q(HL)	0.0010	2.2519
E(LH)	!D	0.0100	n/a	n/a	0.1272
E(LH)	D	0.0100	n/a	n/a	0.1244
D(LH)	!E	0.0100	n/a	n/a	-0.0198
E(HL)	!D	0.0100	n/a	n/a	0.2244
E(HL)	D	0.0100	n/a	n/a	0.2297
D(HL)	!E	0.0100	n/a	n/a	0.0217

LEAKAGE POWER

When Condition	Power (nW)
!D&!E	0.4100
D&!E	0.4521
!D&E	0.3536
D&E	0.3444

gf180mcu_fd_sc_mcu7t5v0__latrnq_1

gf180mcu_fd_sc_mcu7t5v0__latrnq_1 symbol

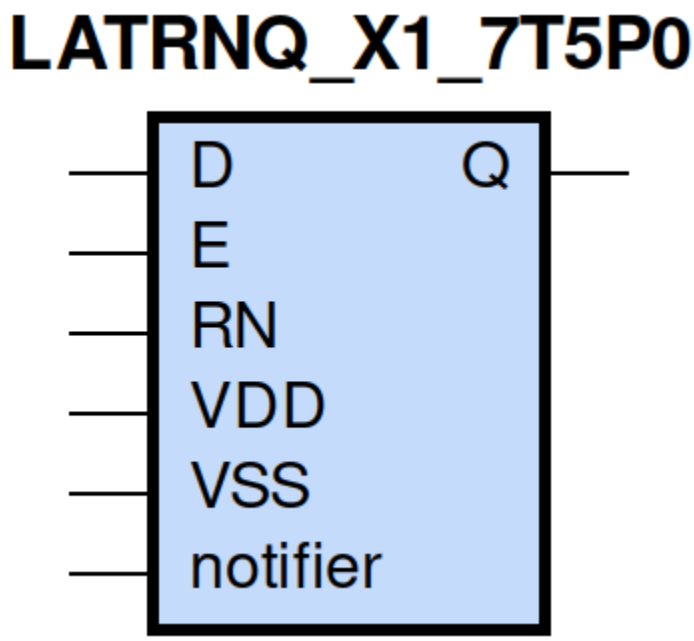

gf180mcu_fd_sc_mcu7t5v0__latrnq_1 schematic

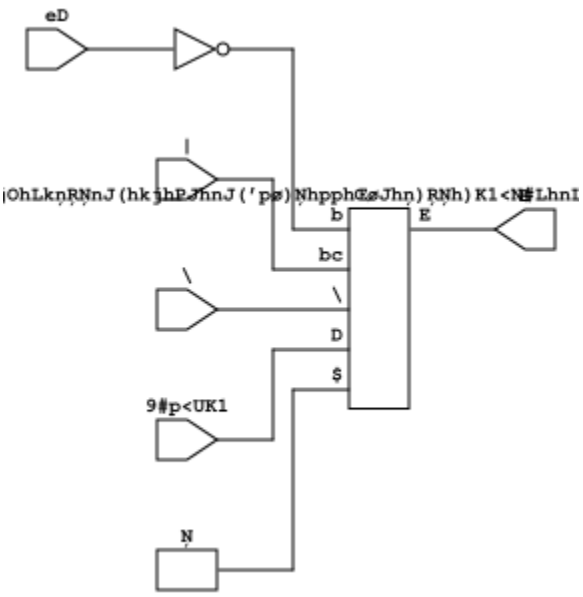

gf180mcu_fd_sc_mcu7t5v0__latrnq_1 layout

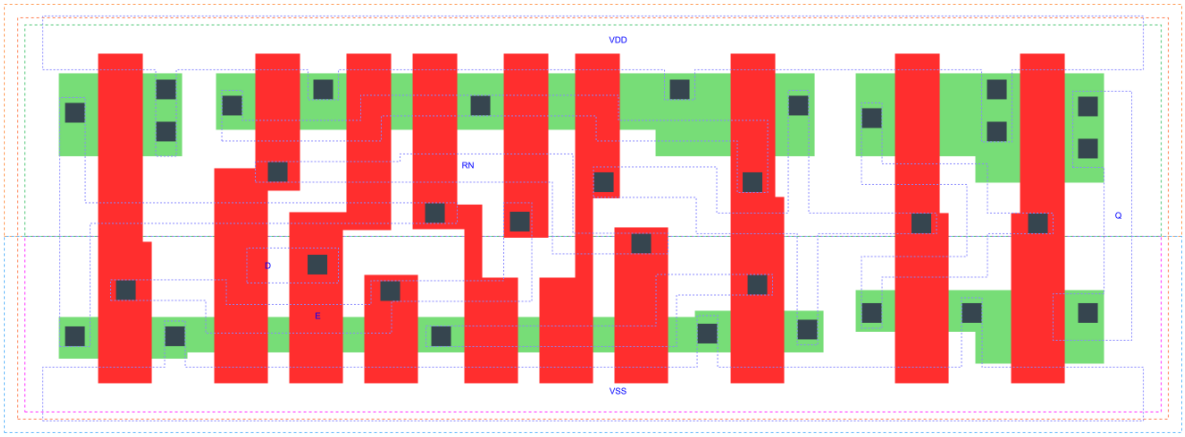

LATRNQ_X1 is a positive D-latch, active low reset, 1X drive strength

Attributes

Attribute	Value
area	48.294400 μm^2

TRUTH TABLE

Input			Output
RN	D	E	Q
H	L	H	L
H	H	H	H
H	X	L	Q
L	X	X	L

FUNCTIONAL SCHEMATIC

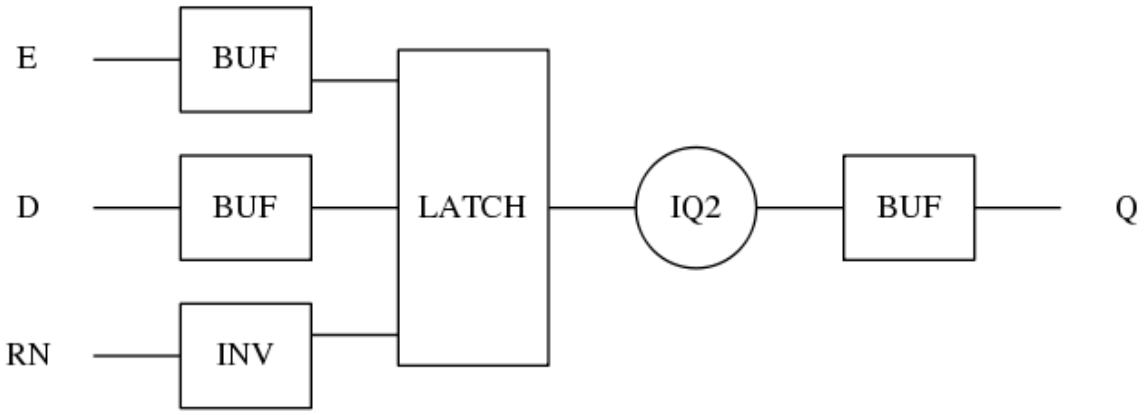

CONSTRAINTS

Constraint Pin	Related Pin	setup(ns)	hold(ns)
D(HL)	E(HL)	0.4290	-0.3720
D(LH)	E(HL)	0.4010	-0.3490

Constraint Pin	Related Pin	recovery(ns)	removal(ns)
RN(LH)	E(HL)	0.4120	-0.3610

Constraint Pin	Related Pin	Minimum Pulse Width(ns)
E(LHL)	E(LH)	0.4950
E(LHL)	E(LH)	0.3580
RN(HLH)	RN(HL)	0.3100
RN(HLH)	RN(HL)	0.3100

PIN CAPACITANCE (pf)

Pin	Type	Capacitance (pf)
E	input	0.0074
D	input	0.0031
RN	input	0.0052

DELAY AND OUTPUT TRANSITION TIME corresponding to min slew and load

Input Pin	Output	When Condition	Tin (ns)	Out Load (pf)	Delay (ns)	Tout (ns)
E(LH)	Q(LH)	D&RN	0.0100	0.0010	0.5865	0.0402
E(LH)	Q(HL)	!D&RN	0.0100	0.0010	0.7359	0.0334
D(LH)	Q(LH)	E&RN	0.0100	0.0010	0.6376	0.0401
D(HL)	Q(HL)	E&RN	0.0100	0.0010	0.6930	0.0334
RN(HL)	Q(HL)	!D&!E	0.0100	0.0010	0.5283	0.0330
RN(HL)	Q(HL)	D&!E	0.0100	0.0010	0.5285	0.0330
RN(HL)	Q(HL)	D&E	0.0100	0.0010	0.5300	0.0331
RN(LH)	Q(LH)	D&E	0.0100	0.0010	0.6492	0.0401

DYNAMIC ENERGY

Input Pin	When Condition	Tin (ns)	Output	Out Load (pf)	Energy (uW/MHz)
E	D&RN	0.0100	Q(LH)	0.0010	0.3758
RN	!D&!E	0.0100	Q(HL)	0.0010	0.4653
RN	D&!E	0.0100	Q(HL)	0.0010	0.4663
RN	D&E	0.0100	Q(HL)	0.0010	0.4996
E	!D&RN	0.0100	Q(HL)	0.0010	0.4647
RN	D&E	0.0100	Q(LH)	0.0010	0.3731
D	E&RN	0.0100	Q(LH)	0.0010	0.3723
D	E&RN	0.0100	Q(HL)	0.0010	0.4898
D(HL)	!E&!RN	0.0100	n/a	n/a	0.0264
D(HL)	E&!RN	0.0100	n/a	n/a	0.0222
D(HL)	!E&RN	0.0100	n/a	n/a	0.0217
E(LH)	!D&!RN	0.0100	n/a	n/a	0.0072
E(LH)	D&!RN	0.0100	n/a	n/a	0.0269
E(LH)	!D&RN	0.0100	n/a	n/a	0.0000
E(LH)	D&RN	0.0100	n/a	n/a	-0.0005
D(LH)	!E&!RN	0.0100	n/a	n/a	-0.0198
D(LH)	E&!RN	0.0100	n/a	n/a	-0.0159
D(LH)	!E&RN	0.0100	n/a	n/a	-0.0198
RN(HL)	!D&!E	0.0100	n/a	n/a	0.0218
RN(HL)	D&!E	0.0100	n/a	n/a	0.0238
RN(HL)	!D&E	0.0100	n/a	n/a	0.0218
RN(LH)	!D&!E	0.0100	n/a	n/a	-0.0201
RN(LH)	!D&E	0.0100	n/a	n/a	-0.0201
RN(LH)	D&!E	0.0100	n/a	n/a	-0.0202
E(HL)	!D&!RN	0.0100	n/a	n/a	0.1494
E(HL)	!D&RN	0.0100	n/a	n/a	0.1494
E(HL)	D&!RN	0.0100	n/a	n/a	0.1498
E(HL)	D&RN	0.0100	n/a	n/a	0.1493

LEAKAGE POWER

When Condition	Power (nW)
!D&!E&!RN	0.2457
!D&E&!RN	0.2463
!D&E&RN	0.2470
D&!E&!RN	0.2459
D&E&!RN	0.2868
!D&!E&RN	0.2721
D&!E&RN	0.3106
D&E&RN	0.2682

gf180mcu_fd_sc_mcu7t5v0__latrnq_2

gf180mcu_fd_sc_mcu7t5v0__latrnq_2 symbol

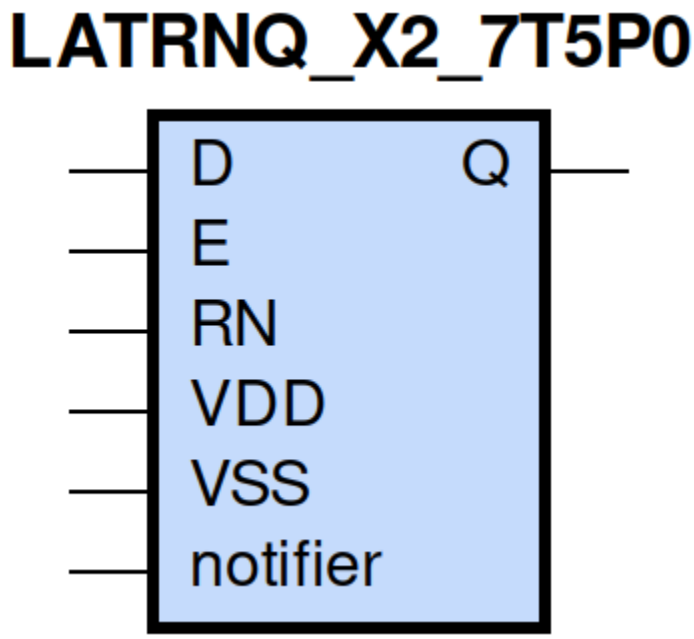

gf180mcu_fd_sc_mcu7t5v0__latrnq_2 schematic

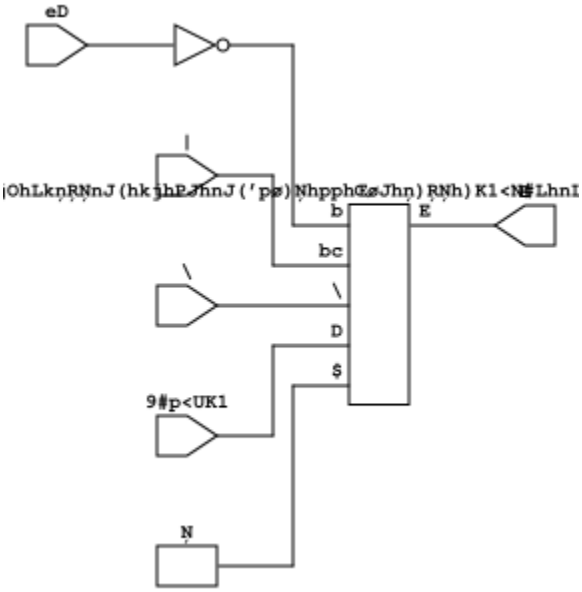

gf180mcu_fd_sc_mcu7t5v0__latrnq_2 layout

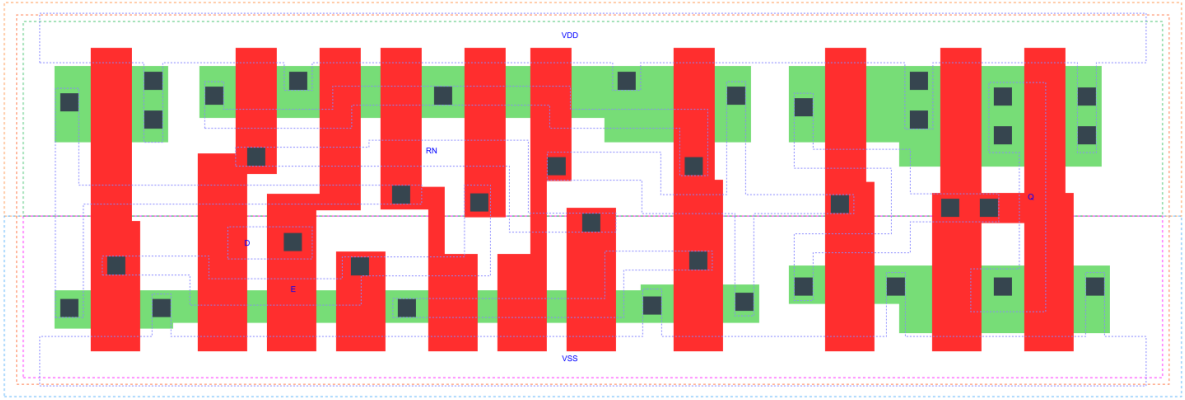

LATRNQ_X2 is a positive D-latch, active low reset, 2X drive strength

Attributes

Attribute	Value
area	52.684800 μm^2

TRUTH TABLE

Input			Output
RN	D	E	Q
H	L	H	L
H	H	H	H
H	X	L	Q
L	X	X	L

FUNCTIONAL SCHEMATIC

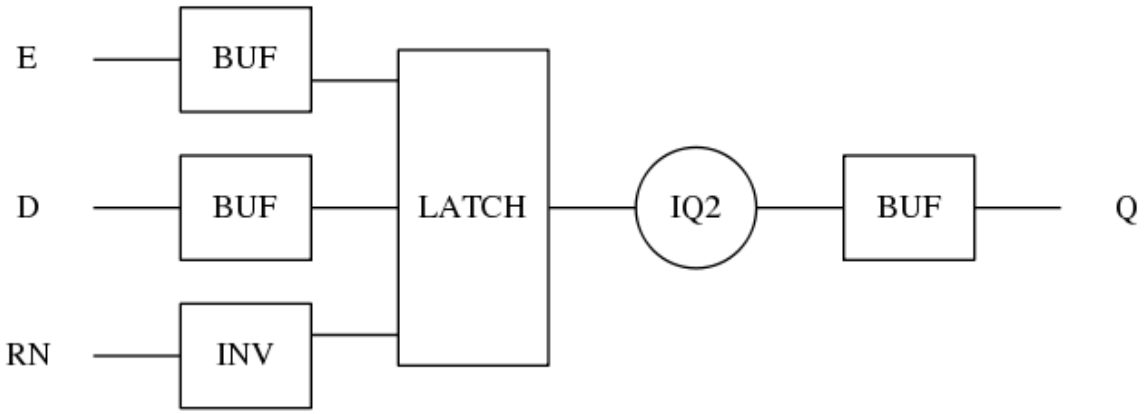

CONSTRAINTS

Constraint Pin	Related Pin	setup(ns)	hold(ns)
D(HL)	E(HL)	0.4290	-0.3720
D(LH)	E(HL)	0.4120	-0.3490

Constraint Pin	Related Pin	recovery(ns)	removal(ns)
RN(LH)	E(HL)	0.4240	-0.3610

Constraint Pin	Related Pin	Minimum Pulse Width(ns)
E(LHL)	E(LH)	0.4950
E(LHL)	E(LH)	0.3680
RN(HLH)	RN(HL)	0.3190
RN(HLH)	RN(HL)	0.3190

PIN CAPACITANCE (pf)

Pin	Type	Capacitance (pf)
E	input	0.0074
D	input	0.0031
RN	input	0.0052

DELAY AND OUTPUT TRANSITION TIME corresponding to min slew and load

Input Pin	Output	When Condition	Tin (ns)	Out Load (pf)	Delay (ns)	Tout (ns)
E(LH)	Q(LH)	D&RN	0.0100	0.0010	0.6245	0.0346
E(LH)	Q(HL)	!D&RN	0.0100	0.0010	0.7684	0.0338
D(LH)	Q(LH)	E&RN	0.0100	0.0010	0.6752	0.0346
D(HL)	Q(HL)	E&RN	0.0100	0.0010	0.7251	0.0337
RN(HL)	Q(HL)	!D&!E	0.0100	0.0010	0.5605	0.0335
RN(HL)	Q(HL)	D&!E	0.0100	0.0010	0.5607	0.0335
RN(HL)	Q(HL)	D&E	0.0100	0.0010	0.5625	0.0336
RN(LH)	Q(LH)	D&E	0.0100	0.0010	0.6871	0.0348

DYNAMIC ENERGY

Input Pin	When Condition	Tin (ns)	Output	Out Load (pf)	Energy (uW/MHz)
E	D&RN	0.0100	Q(LH)	0.0010	0.4756
RN	!D&!E	0.0100	Q(HL)	0.0010	0.5856
RN	D&!E	0.0100	Q(HL)	0.0010	0.5867
RN	D&E	0.0100	Q(HL)	0.0010	0.6202
E	!D&RN	0.0100	Q(HL)	0.0010	0.5854
RN	D&E	0.0100	Q(LH)	0.0010	0.4727
D	E&RN	0.0100	Q(LH)	0.0010	0.4721
D	E&RN	0.0100	Q(HL)	0.0010	0.6101
D(HL)	!E&!RN	0.0100	n/a	n/a	0.0264
D(HL)	E&!RN	0.0100	n/a	n/a	0.0222
D(HL)	!E&RN	0.0100	n/a	n/a	0.0217
E(LH)	!D&!RN	0.0100	n/a	n/a	0.0072
E(LH)	D&!RN	0.0100	n/a	n/a	0.0270
E(LH)	!D&RN	0.0100	n/a	n/a	0.0000
E(LH)	D&RN	0.0100	n/a	n/a	-0.0005
D(LH)	!E&!RN	0.0100	n/a	n/a	-0.0198
D(LH)	E&!RN	0.0100	n/a	n/a	-0.0159
D(LH)	!E&RN	0.0100	n/a	n/a	-0.0198
RN(HL)	!D&!E	0.0100	n/a	n/a	0.0219
RN(HL)	D&!E	0.0100	n/a	n/a	0.0238
RN(HL)	!D&E	0.0100	n/a	n/a	0.0218
RN(LH)	!D&!E	0.0100	n/a	n/a	-0.0202
RN(LH)	!D&E	0.0100	n/a	n/a	-0.0202
RN(LH)	D&!E	0.0100	n/a	n/a	-0.0202
E(HL)	!D&!RN	0.0100	n/a	n/a	0.1494
E(HL)	!D&RN	0.0100	n/a	n/a	0.1493
E(HL)	D&!RN	0.0100	n/a	n/a	0.1498
E(HL)	D&RN	0.0100	n/a	n/a	0.1493

LEAKAGE POWER

When Condition	Power (nW)
!D&!E&!RN	0.2722
!D&E&!RN	0.2728
!D&E&RN	0.2735
D&!E&!RN	0.2724
D&E&!RN	0.3133
!D&!E&RN	0.2986
D&!E&RN	0.3361
D&E&RN	0.2936

gf180mcu_fd_sc_mcu7t5v0__latrnq_4

gf180mcu_fd_sc_mcu7t5v0__latrnq_4 symbol

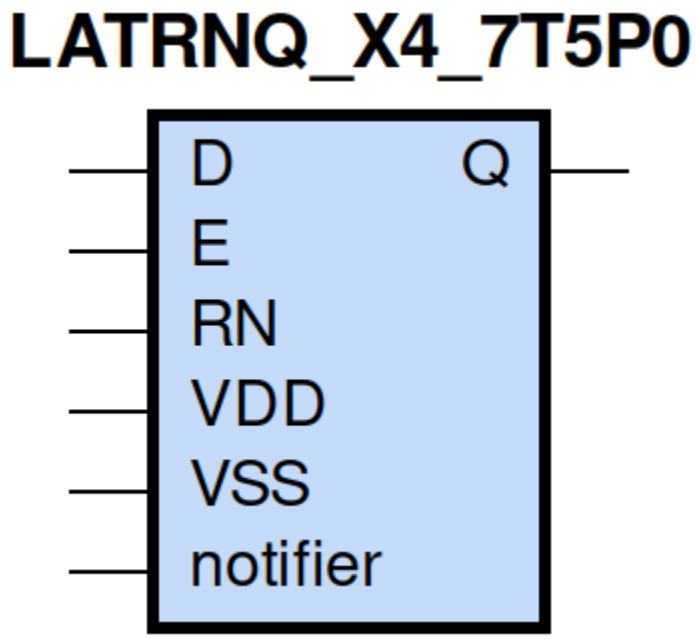

gf180mcu_fd_sc_mcu7t5v0__latrnq_4 schematic

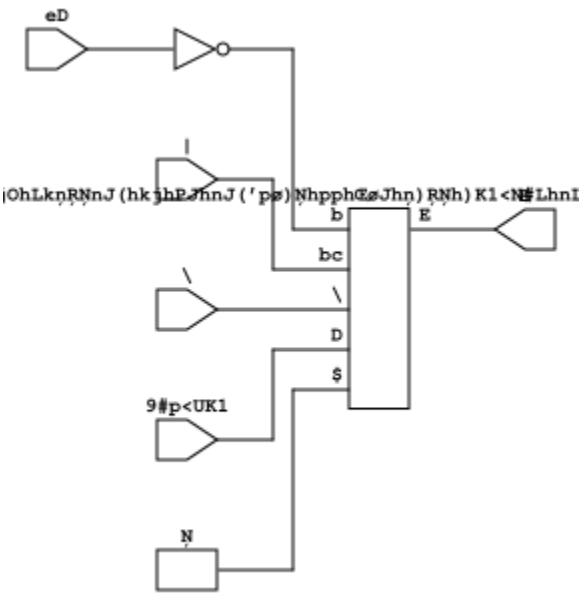

gf180mcu_fd_sc_mcu7t5v0__latrnq_4 layout

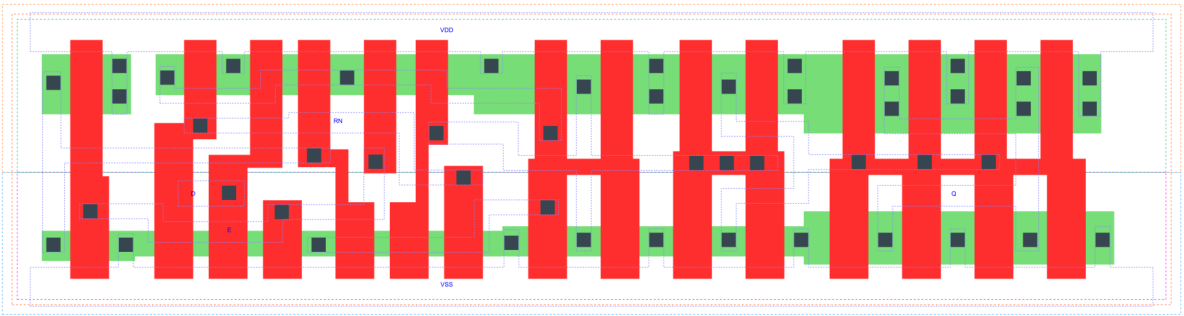

LATRNQ_X4 is a positive D-latch, active low reset, 4X drive strength

Attributes

Attribute	Value
area	68.051200 μm^2

TRUTH TABLE

Input			Output
RN	D	E	Q
H	L	H	L
H	H	H	H
H	X	L	Q
L	X	X	L

FUNCTIONAL SCHEMATIC

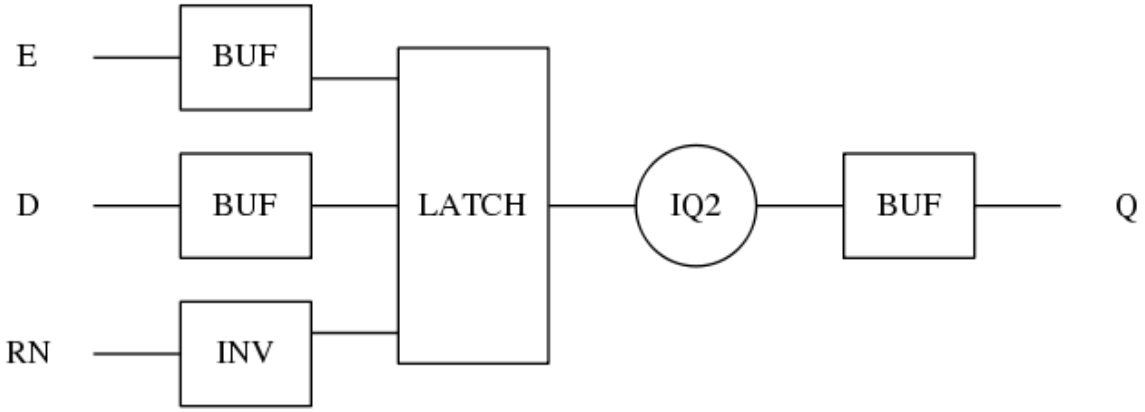

CONSTRAINTS

Constraint Pin	Related Pin	setup(ns)	hold(ns)
D(HL)	E(HL)	0.4980	-0.4410
D(LH)	E(HL)	0.4690	-0.4060

Constraint Pin	Related Pin	recovery(ns)	removal(ns)
RN(LH)	E(HL)	0.4810	-0.4180

Constraint Pin	Related Pin	Minimum Pulse Width(ns)
E(LHL)	E(LH)	0.5540
E(LHL)	E(LH)	0.4270
RN(HLH)	RN(HL)	0.3580
RN(HLH)	RN(HL)	0.3490

PIN CAPACITANCE (pf)

Pin	Type	Capacitance (pf)
E	input	0.0074
D	input	0.0031
RN	input	0.0052

DELAY AND OUTPUT TRANSITION TIME corresponding to min slew and load

Input Pin	Output	When Condition	Tin (ns)	Out Load (pf)	Delay (ns)	Tout (ns)
E(LH)	Q(LH)	D&RN	0.0100	0.0010	0.6454	0.0313
E(LH)	Q(HL)	!D&RN	0.0100	0.0010	0.8074	0.0305
D(LH)	Q(LH)	E&RN	0.0100	0.0010	0.6969	0.0312
D(HL)	Q(HL)	E&RN	0.0100	0.0010	0.7673	0.0305
RN(HL)	Q(HL)	!D&!E	0.0100	0.0010	0.5627	0.0300
RN(HL)	Q(HL)	D&!E	0.0100	0.0010	0.5630	0.0301
RN(HL)	Q(HL)	D&E	0.0100	0.0010	0.5659	0.0302
RN(LH)	Q(LH)	D&E	0.0100	0.0010	0.7087	0.0312

DYNAMIC ENERGY

Input Pin	When Condition	Tin (ns)	Output	Out Load (pf)	Energy (uW/MHz)
E	D&RN	0.0100	Q(LH)	0.0010	0.8448
RN	!D&!E	0.0100	Q(HL)	0.0010	0.9556
RN	D&!E	0.0100	Q(HL)	0.0010	0.9566
RN	D&E	0.0100	Q(HL)	0.0010	0.9958
E	!D&RN	0.0100	Q(HL)	0.0010	1.0083
RN	D&E	0.0100	Q(LH)	0.0010	0.8424
D	E&RN	0.0100	Q(LH)	0.0010	0.8419
D	E&RN	0.0100	Q(HL)	0.0010	1.0348
D(HL)	!E&!RN	0.0100	n/a	n/a	0.0264
D(HL)	E&!RN	0.0100	n/a	n/a	0.0222
D(HL)	!E&RN	0.0100	n/a	n/a	0.0217
E(LH)	!D&!RN	0.0100	n/a	n/a	0.0072
E(LH)	D&!RN	0.0100	n/a	n/a	0.0270
E(LH)	!D&RN	0.0100	n/a	n/a	0.0000
E(LH)	D&RN	0.0100	n/a	n/a	-0.0005
D(LH)	!E&!RN	0.0100	n/a	n/a	-0.0198
D(LH)	E&!RN	0.0100	n/a	n/a	-0.0159
D(LH)	!E&RN	0.0100	n/a	n/a	-0.0198
RN(HL)	!D&!E	0.0100	n/a	n/a	0.0218
RN(HL)	D&!E	0.0100	n/a	n/a	0.0238
RN(HL)	!D&E	0.0100	n/a	n/a	0.0218
RN(LH)	!D&!E	0.0100	n/a	n/a	-0.0202
RN(LH)	!D&E	0.0100	n/a	n/a	-0.0202
RN(LH)	D&!E	0.0100	n/a	n/a	-0.0202
E(HL)	!D&!RN	0.0100	n/a	n/a	0.1494
E(HL)	!D&RN	0.0100	n/a	n/a	0.1494
E(HL)	D&!RN	0.0100	n/a	n/a	0.1498
E(HL)	D&RN	0.0100	n/a	n/a	0.1493

LEAKAGE POWER

When Condition	Power (nW)
!D&!E&!RN	0.3773
!D&E&!RN	0.3778
!D&E&RN	0.3786
D&!E&!RN	0.3774
D&E&!RN	0.4183
!D&!E&RN	0.4036
D&!E&RN	0.4390
D&E&RN	0.3966

gf180mcu_fd_sc_mcu7t5v0__latrsnq_1

gf180mcu_fd_sc_mcu7t5v0__latrsnq_1 symbol

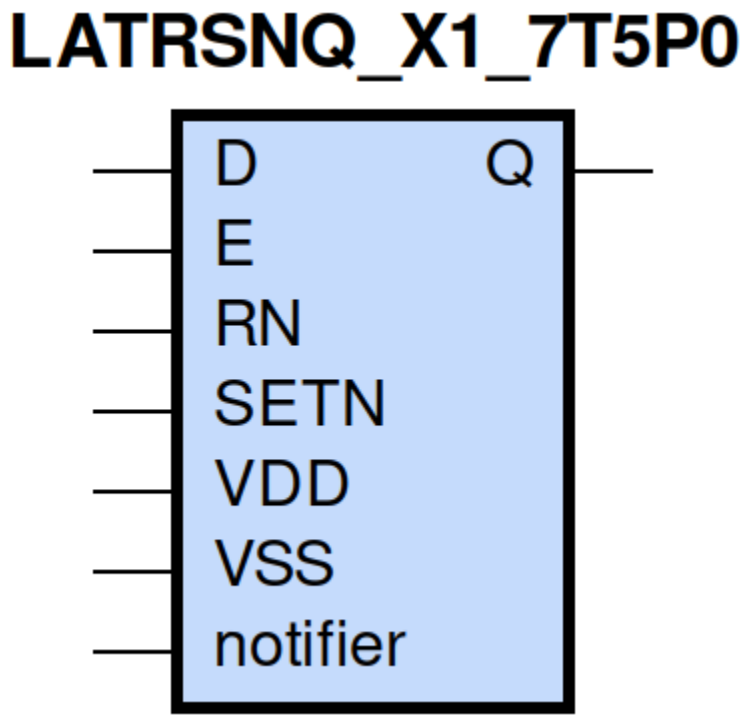

gf180mcu_fd_sc_mcu7t5v0__latrsnq_1 schematic

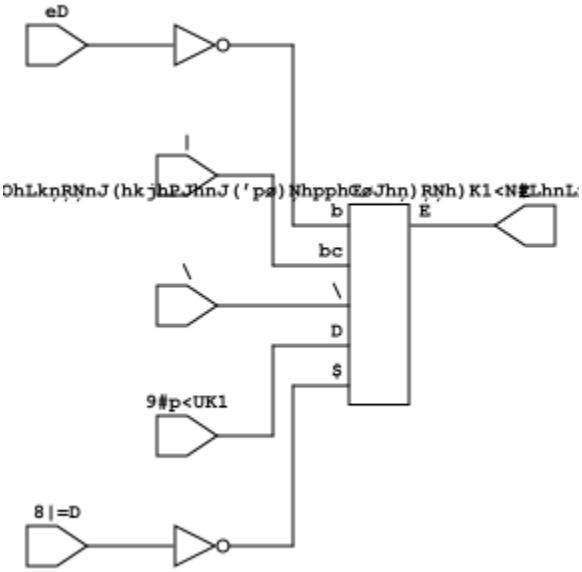

gf180mcu_fd_sc_mcu7t5v0__latrsnq_1 layout

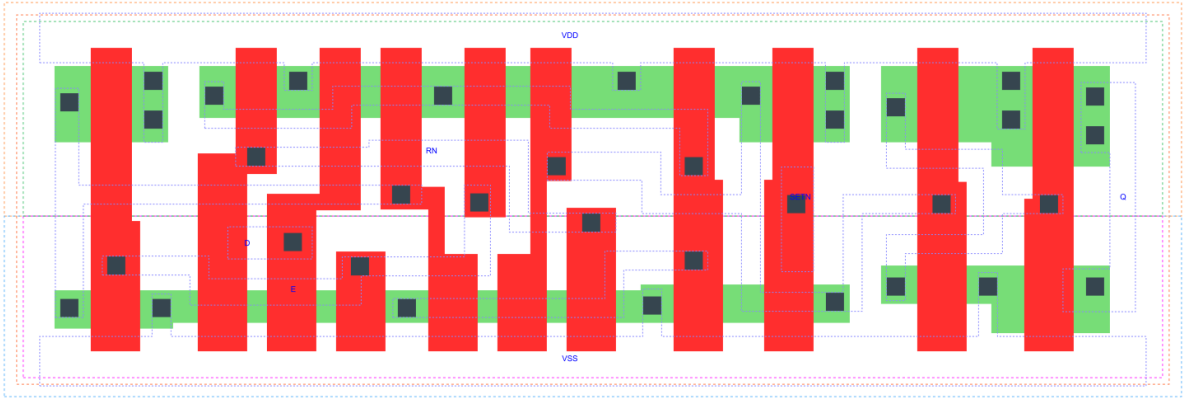

LATRSNQ_X1 is a positive D-latch, active low set/reset, 1X drive strength

Attributes

Attribute	Value
area	52.684800 μm^2

TRUTH TABLE

Input				Output
RN	SETN	D	E	Q
H	H	L	H	L
H	H	H	H	H
H	H	X	L	Q
L	H	X	X	L
H	L	X	X	H
L	L	X	X	H

FUNCTIONAL SCHEMATIC

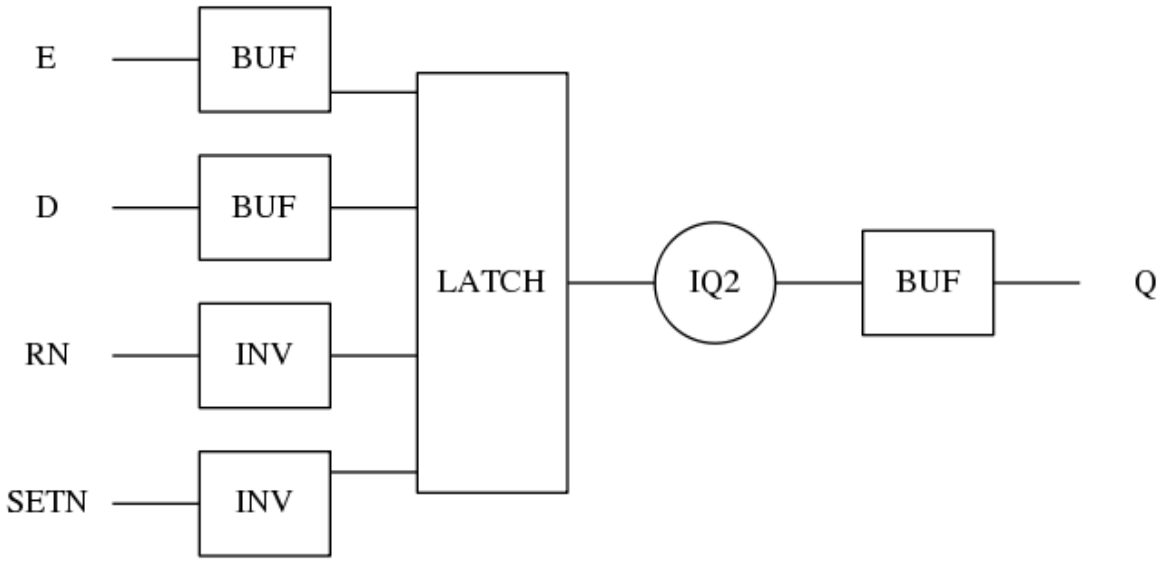

CONSTRAINTS

Constraint Pin	Related Pin	setup(ns)	hold(ns)
D(HL)	E(HL)	0.4240	-0.3610
D(LH)	E(HL)	0.4580	-0.3950
RN(LH)	SETN(LH)	0.0970	-0.0170
RN(LH)	SETN(LH)	0.0970	-0.0170
SETN(LH)	RN(LH)	-0.0170	0.0970
SETN(LH)	RN(LH)	-0.0170	0.0970

Constraint Pin	Related Pin	recovery(ns)	removal(ns)
RN(LH)	E(HL)	0.4690	-0.4060
SETN(LH)	E(HL)	-0.0170	0.1370

Constraint Pin	Related Pin	Minimum Pulse Width(ns)
E(LHL)	E(LH)	0.4850
E(LHL)	E(LH)	0.4170
RN(HLH)	RN(HL)	0.3100
RN(HLH)	RN(HL)	0.3100
SETN(HLH)	SETN(HL)	0.2800
SETN(HLH)	SETN(HL)	0.2800

PIN CAPACITANCE (pf)

Pin	Type	Capacitance (pf)
E	input	0.0074
D	input	0.0031
RN	input	0.0052
SETN	input	0.0037

DELAY AND OUTPUT TRANSITION TIME corresponding to min slew and load

Input Pin	Output	When Condition	Tin (ns)	Out Load (pf)	Delay (ns)	Tout (ns)
E(LH)	Q(LH)	D&RN&SETN	0.0100	0.0010	0.6919	0.0413
E(LH)	Q(HL)	!D&RN&SETN	0.0100	0.0010	0.7694	0.0352
D(LH)	Q(LH)	E&RN&SETN	0.0100	0.0010	0.7419	0.0414
D(HL)	Q(HL)	E&RN&SETN	0.0100	0.0010	0.7267	0.0353
RN(HL)	Q(HL)	!D&!E&SETN	0.0100	0.0010	0.5803	0.0348
RN(HL)	Q(HL)	D&!E&SETN	0.0100	0.0010	0.5807	0.0349
RN(HL)	Q(HL)	D&E&SETN	0.0100	0.0010	0.5788	0.0350
RN(LH)	Q(LH)	D&E&SETN	0.0100	0.0010	0.7539	0.0415
SETN(LH)	Q(HL)	!D&!E&!RN	0.0100	0.0010	0.3451	0.0347
SETN(LH)	Q(HL)	!D&E&!RN	0.0100	0.0010	0.3509	0.0348
SETN(LH)	Q(HL)	!D&E&RN	0.0100	0.0010	0.3527	0.0349
SETN(LH)	Q(HL)	D&!E&!RN	0.0100	0.0010	0.3451	0.0347
SETN(LH)	Q(HL)	D&E&!RN	0.0100	0.0010	0.3509	0.0348
SETN(HL)	Q(LH)	!D&!E&RN	0.0100	0.0010	0.3125	0.0401
SETN(HL)	Q(LH)	D&!E&RN	0.0100	0.0010	0.3125	0.0400
SETN(HL)	Q(LH)	!D&!E&!RN	0.0100	0.0010	0.3083	0.0400
SETN(HL)	Q(LH)	!D&E&!RN	0.0100	0.0010	0.3099	0.0401
SETN(HL)	Q(LH)	!D&E&RN	0.0100	0.0010	0.3127	0.0401
SETN(HL)	Q(LH)	D&!E&!RN	0.0100	0.0010	0.3083	0.0400
SETN(HL)	Q(LH)	D&E&!RN	0.0100	0.0010	0.3099	0.0401

DYNAMIC ENERGY

Input Pin	When Condition	Tin (ns)	Output	Out Load (pf)	Energy (uW/MHz)
SETN	!D&!E&!RN	0.0100	Q(HL)	0.0010	0.2338
SETN	!D&E&!RN	0.0100	Q(HL)	0.0010	0.2427
SETN	!D&E&RN	0.0100	Q(HL)	0.0010	0.2330
SETN	D&!E&!RN	0.0100	Q(HL)	0.0010	0.2338
SETN	D&E&!RN	0.0100	Q(HL)	0.0010	0.2427

continues on next page

Table 52 – continued from previous page

SETN	!D&!E&RN	0.0100	Q(LH)	0.0010	0.4210
SETN	D&!E&RN	0.0100	Q(LH)	0.0010	0.4210
SETN	!D&!E&!RN	0.0100	Q(LH)	0.0010	0.3280
SETN	!D&E&!RN	0.0100	Q(LH)	0.0010	0.3285
SETN	!D&E&RN	0.0100	Q(LH)	0.0010	0.3346
SETN	D&!E&!RN	0.0100	Q(LH)	0.0010	0.3280
SETN	D&E&!RN	0.0100	Q(LH)	0.0010	0.3285
E	D&RN&SETN	0.0100	Q(LH)	0.0010	0.4122
RN	!D&!E&SETN	0.0100	Q(HL)	0.0010	0.4646
RN	D&!E&SETN	0.0100	Q(HL)	0.0010	0.4663
RN	D&E&SETN	0.0100	Q(HL)	0.0010	0.4985
E	!D&RN&SETN	0.0100	Q(HL)	0.0010	0.4547
RN	D&E&SETN	0.0100	Q(LH)	0.0010	0.4093
D	E&RN&SETN	0.0100	Q(LH)	0.0010	0.4082
D	E&RN&SETN	0.0100	Q(HL)	0.0010	0.4795
SETN(HL)	!D&!E&RN	0.0100	n/a	n/a	0.0322
SETN(HL)	D&!E&RN	0.0100	n/a	n/a	0.0322
SETN(HL)	D&E&RN	0.0100	n/a	n/a	0.0322
D(HL)	!E&!RN&!SETN	0.0100	n/a	n/a	0.0264
D(HL)	!E&RN&!SETN	0.0100	n/a	n/a	0.0201
D(HL)	E&!RN&!SETN	0.0100	n/a	n/a	0.0222
D(HL)	E&RN&!SETN	0.0100	n/a	n/a	0.1964
D(HL)	!E&!RN&SETN	0.0100	n/a	n/a	0.0264
D(HL)	E&!RN&SETN	0.0100	n/a	n/a	0.0222
D(HL)	!E&RN&SETN	0.0100	n/a	n/a	0.0217
E(LH)	!D&!RN&!SETN	0.0100	n/a	n/a	0.0081
E(LH)	!D&RN&!SETN	0.0100	n/a	n/a	0.1682
E(LH)	D&!RN&!SETN	0.0100	n/a	n/a	0.0280
E(LH)	D&RN&!SETN	0.0100	n/a	n/a	0.0055
E(LH)	!D&!RN&SETN	0.0100	n/a	n/a	0.0072
E(LH)	D&!RN&SETN	0.0100	n/a	n/a	0.0269
E(LH)	!D&RN&SETN	0.0100	n/a	n/a	0.0000
E(LH)	D&RN&SETN	0.0100	n/a	n/a	-0.0005
D(LH)	!E&!RN&!SETN	0.0100	n/a	n/a	-0.0198
D(LH)	!E&RN&!SETN	0.0100	n/a	n/a	-0.0173
D(LH)	E&!RN&!SETN	0.0100	n/a	n/a	-0.0159
D(LH)	E&RN&!SETN	0.0100	n/a	n/a	0.0459
D(LH)	!E&!RN&SETN	0.0100	n/a	n/a	-0.0198
D(LH)	E&!RN&SETN	0.0100	n/a	n/a	-0.0159
D(LH)	!E&RN&SETN	0.0100	n/a	n/a	-0.0198
RN(HL)	!D&!E&!SETN	0.0100	n/a	n/a	0.1860
RN(HL)	!D&E&!SETN	0.0100	n/a	n/a	0.0245
RN(HL)	D&!E&!SETN	0.0100	n/a	n/a	0.1877
RN(HL)	D&E&!SETN	0.0100	n/a	n/a	0.2166
RN(HL)	!D&!E&SETN	0.0100	n/a	n/a	0.0219
RN(HL)	D&!E&SETN	0.0100	n/a	n/a	0.0238
RN(HL)	!D&E&SETN	0.0100	n/a	n/a	0.0218
RN(LH)	!D&!E&!SETN	0.0100	n/a	n/a	0.0760
RN(LH)	!D&E&!SETN	0.0100	n/a	n/a	-0.0201
RN(LH)	D&!E&!SETN	0.0100	n/a	n/a	0.0760
RN(LH)	D&E&!SETN	0.0100	n/a	n/a	0.0469
RN(LH)	!D&!E&SETN	0.0100	n/a	n/a	-0.0202

continues on next page

Table 52 – continued from previous page

RN(LH)	!D&E&SETN	0.0100	n/a	n/a	-0.0201
RN(LH)	D&!E&SETN	0.0100	n/a	n/a	-0.0202
SETN(LH)	!D&!E&RN	0.0100	n/a	n/a	-0.0206
SETN(LH)	D&!E&RN	0.0100	n/a	n/a	-0.0206
SETN(LH)	D&E&RN	0.0100	n/a	n/a	-0.0206
E(HL)	!D&!RN&!SETN	0.0100	n/a	n/a	0.1574
E(HL)	!D&RN&!SETN	0.0100	n/a	n/a	0.2160
E(HL)	D&!RN&!SETN	0.0100	n/a	n/a	0.1578
E(HL)	D&RN&!SETN	0.0100	n/a	n/a	0.1493
E(HL)	D&RN&SETN	0.0100	n/a	n/a	0.1493
E(HL)	!D&!RN&SETN	0.0100	n/a	n/a	0.1494
E(HL)	!D&RN&SETN	0.0100	n/a	n/a	0.1494
E(HL)	D&!RN&SETN	0.0100	n/a	n/a	0.1498

LEAKAGE POWER

When Condition	Power (nW)
!D&!E&!RN&!SETN	0.2852
!D&!E&RN&!SETN	0.2672
!D&E&!RN&!SETN	0.2454
!D&E&RN&!SETN	0.2470
D&!E&!RN&!SETN	0.2853
D&!E&RN&!SETN	0.2672
D&E&!RN&!SETN	0.2859
D&E&RN&!SETN	0.2677
D&E&RN&SETN	0.3084
!D&!E&!RN&SETN	0.2718
!D&E&!RN&SETN	0.2724
!D&E&RN&SETN	0.2732
D&!E&!RN&SETN	0.2720
D&E&!RN&SETN	0.3129
!D&!E&RN&SETN	0.2982
D&!E&RN&SETN	0.3508

gf180mcu_fd_sc_mcu7t5v0__latrsnq_2

gf180mcu_fd_sc_mcu7t5v0__latrsnq_2 symbol

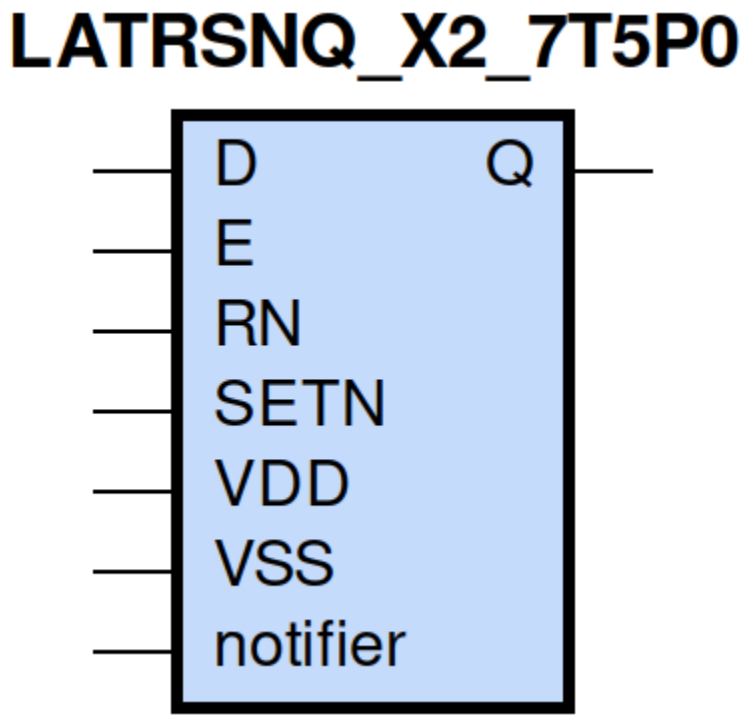

gf180mcu_fd_sc_mcu7t5v0__latrsnq_2 schematic

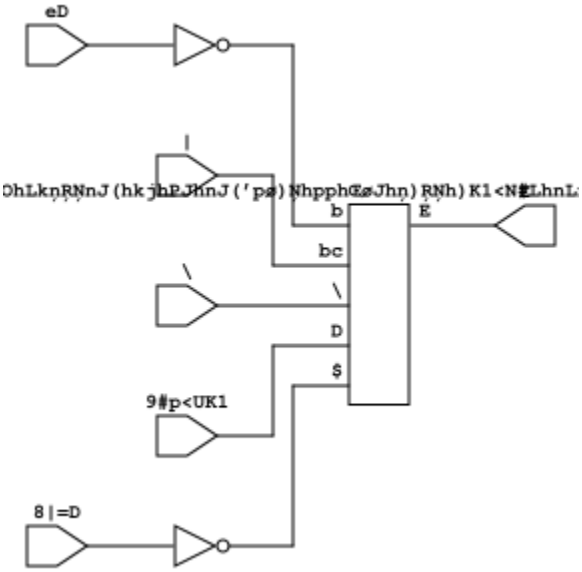

gf180mcu_fd_sc_mcu7t5v0__latrsnq_2 layout

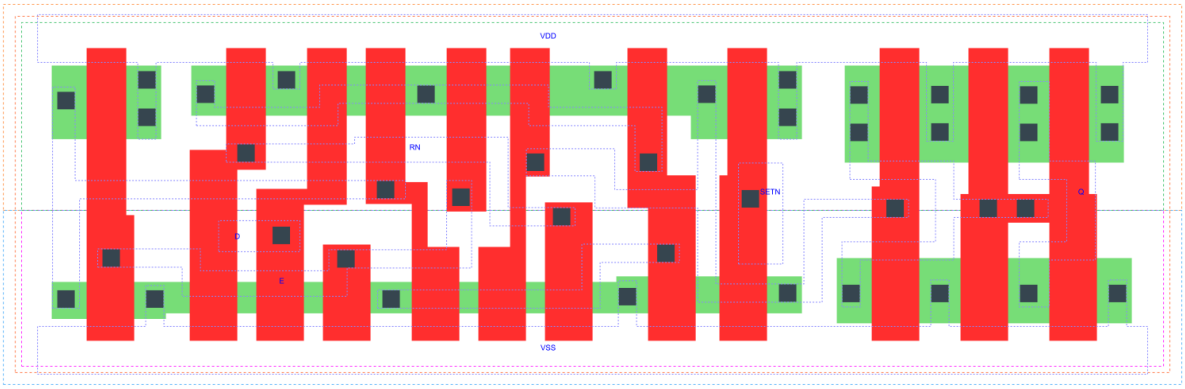

LATRSNQ_X2 is a positive D-latch, active low set/reset, 2X drive strength

Attributes

Attribute	Value
area	54.880000 μm^2

TRUTH TABLE

Input				Output
RN	SETN	D	E	Q
H	H	L	H	L
H	H	H	H	H
H	H	X	L	Q
L	H	X	X	L
H	L	X	X	H
L	L	X	X	H

FUNCTIONAL SCHEMATIC

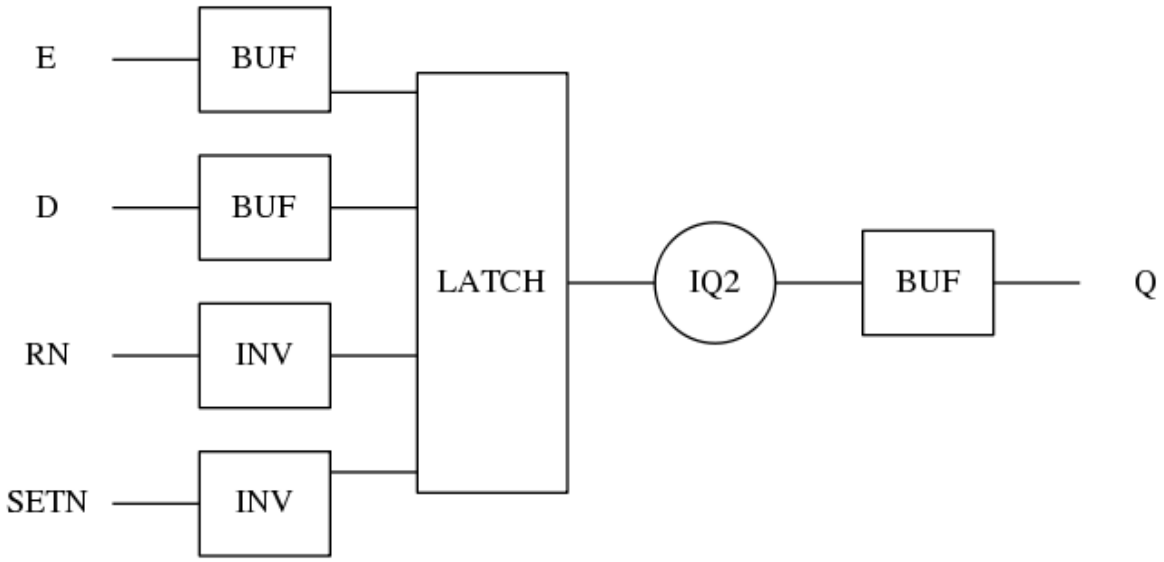

CONSTRAINTS

Constraint Pin	Related Pin	setup(ns)	hold(ns)
D(HL)	E(HL)	0.4410	-0.3720
D(LH)	E(HL)	0.4750	-0.4010
RN(LH)	SETN(LH)	0.0860	-0.0000
RN(LH)	SETN(LH)	0.0860	-0.0000
SETN(LH)	RN(LH)	0.0000	0.0860
SETN(LH)	RN(LH)	0.0000	0.0860

Constraint Pin	Related Pin	recovery(ns)	removal(ns)
RN(LH)	E(HL)	0.4870	-0.4180
SETN(LH)	E(HL)	0.0110	0.1260

Constraint Pin	Related Pin	Minimum Pulse Width(ns)
E(LHL)	E(LH)	0.5050
E(LHL)	E(LH)	0.4370
RN(HLH)	RN(HL)	0.3290
RN(HLH)	RN(HL)	0.3290
SETN(HLH)	SETN(HL)	0.2800
SETN(HLH)	SETN(HL)	0.2800

PIN CAPACITANCE (pf)

Pin	Type	Capacitance (pf)
E	input	0.0074
D	input	0.0031
RN	input	0.0051
SETN	input	0.0037

DELAY AND OUTPUT TRANSITION TIME corresponding to min slew and load

Input Pin	Output	When Condition	Tin (ns)	Out Load (pf)	Delay (ns)	Tout (ns)
E(LH)	Q(LH)	D&RN&SETN	0.0100	0.0010	0.6932	0.0316
E(LH)	Q(HL)	!D&RN&SETN	0.0100	0.0010	0.8052	0.0315
D(LH)	Q(LH)	E&RN&SETN	0.0100	0.0010	0.7430	0.0314
D(HL)	Q(HL)	E&RN&SETN	0.0100	0.0010	0.7625	0.0315
RN(HL)	Q(HL)	!D&!E&SETN	0.0100	0.0010	0.6141	0.0312
RN(HL)	Q(HL)	D&!E&SETN	0.0100	0.0010	0.6143	0.0312
RN(HL)	Q(HL)	D&E&SETN	0.0100	0.0010	0.6126	0.0313
RN(LH)	Q(LH)	D&E&SETN	0.0100	0.0010	0.7547	0.0316
SETN(LH)	Q(HL)	!D&!E&!RN	0.0100	0.0010	0.3781	0.0310
SETN(LH)	Q(HL)	!D&E&!RN	0.0100	0.0010	0.3843	0.0312
SETN(LH)	Q(HL)	!D&E&RN	0.0100	0.0010	0.3860	0.0312
SETN(LH)	Q(HL)	D&!E&!RN	0.0100	0.0010	0.3781	0.0310
SETN(LH)	Q(HL)	D&E&!RN	0.0100	0.0010	0.3842	0.0312
SETN(HL)	Q(LH)	!D&!E&RN	0.0100	0.0010	0.3101	0.0297
SETN(HL)	Q(LH)	D&!E&RN	0.0100	0.0010	0.3102	0.0297
SETN(HL)	Q(LH)	!D&!E&!RN	0.0100	0.0010	0.3060	0.0294
SETN(HL)	Q(LH)	!D&E&!RN	0.0100	0.0010	0.3076	0.0296
SETN(HL)	Q(LH)	!D&E&RN	0.0100	0.0010	0.3105	0.0298
SETN(HL)	Q(LH)	D&!E&!RN	0.0100	0.0010	0.3060	0.0294
SETN(HL)	Q(LH)	D&E&!RN	0.0100	0.0010	0.3075	0.0296

DYNAMIC ENERGY

Input Pin	When Condition	Tin (ns)	Output	Out Load (pf)	Energy (uW/MHz)
SETN	!D&!E&!RN	0.0100	Q(HL)	0.0010	0.3797
SETN	!D&E&!RN	0.0100	Q(HL)	0.0010	0.3895
SETN	!D&E&RN	0.0100	Q(HL)	0.0010	0.3796
SETN	D&!E&!RN	0.0100	Q(HL)	0.0010	0.3796
SETN	D&E&!RN	0.0100	Q(HL)	0.0010	0.3896

continues on next page

Table 53 – continued from previous page

SETN	!D&!E&RN	0.0100	Q(LH)	0.0010	0.5330
SETN	D&!E&RN	0.0100	Q(LH)	0.0010	0.5331
SETN	!D&!E&!RN	0.0100	Q(LH)	0.0010	0.4388
SETN	!D&E&!RN	0.0100	Q(LH)	0.0010	0.4395
SETN	!D&E&RN	0.0100	Q(LH)	0.0010	0.4464
SETN	D&!E&!RN	0.0100	Q(LH)	0.0010	0.4388
SETN	D&E&!RN	0.0100	Q(LH)	0.0010	0.4395
E	D&RN&SETN	0.0100	Q(LH)	0.0010	0.5359
RN	!D&!E&SETN	0.0100	Q(HL)	0.0010	0.6135
RN	D&!E&SETN	0.0100	Q(HL)	0.0010	0.6151
RN	D&E&SETN	0.0100	Q(HL)	0.0010	0.6484
E	!D&RN&SETN	0.0100	Q(HL)	0.0010	0.6060
RN	D&E&SETN	0.0100	Q(LH)	0.0010	0.5326
D	E&RN&SETN	0.0100	Q(LH)	0.0010	0.5316
D	E&RN&SETN	0.0100	Q(HL)	0.0010	0.6306
SETN(HL)	!D&!E&RN	0.0100	n/a	n/a	0.0322
SETN(HL)	D&!E&RN	0.0100	n/a	n/a	0.0322
SETN(HL)	D&E&RN	0.0100	n/a	n/a	0.0322
D(HL)	!E&!RN&!SETN	0.0100	n/a	n/a	0.0264
D(HL)	!E&RN&!SETN	0.0100	n/a	n/a	0.0201
D(HL)	E&!RN&!SETN	0.0100	n/a	n/a	0.0222
D(HL)	E&RN&!SETN	0.0100	n/a	n/a	0.1977
D(HL)	!E&!RN&SETN	0.0100	n/a	n/a	0.0264
D(HL)	E&!RN&SETN	0.0100	n/a	n/a	0.0222
D(HL)	!E&RN&SETN	0.0100	n/a	n/a	0.0217
E(LH)	!D&!RN&!SETN	0.0100	n/a	n/a	0.0082
E(LH)	!D&RN&!SETN	0.0100	n/a	n/a	0.1695
E(LH)	D&!RN&!SETN	0.0100	n/a	n/a	0.0280
E(LH)	D&RN&!SETN	0.0100	n/a	n/a	0.0055
E(LH)	!D&!RN&SETN	0.0100	n/a	n/a	0.0072
E(LH)	D&!RN&SETN	0.0100	n/a	n/a	0.0269
E(LH)	!D&RN&SETN	0.0100	n/a	n/a	0.0000
E(LH)	D&RN&SETN	0.0100	n/a	n/a	-0.0004
D(LH)	!E&!RN&!SETN	0.0100	n/a	n/a	-0.0198
D(LH)	!E&RN&!SETN	0.0100	n/a	n/a	-0.0173
D(LH)	E&!RN&!SETN	0.0100	n/a	n/a	-0.0159
D(LH)	E&RN&!SETN	0.0100	n/a	n/a	0.0459
D(LH)	!E&!RN&SETN	0.0100	n/a	n/a	-0.0198
D(LH)	E&!RN&SETN	0.0100	n/a	n/a	-0.0159
D(LH)	!E&RN&SETN	0.0100	n/a	n/a	-0.0198
RN(HL)	!D&!E&!SETN	0.0100	n/a	n/a	0.1873
RN(HL)	!D&E&!SETN	0.0100	n/a	n/a	0.0245
RN(HL)	D&!E&!SETN	0.0100	n/a	n/a	0.1890
RN(HL)	D&E&!SETN	0.0100	n/a	n/a	0.2180
RN(HL)	!D&!E&SETN	0.0100	n/a	n/a	0.0219
RN(HL)	D&!E&SETN	0.0100	n/a	n/a	0.0238
RN(HL)	!D&E&SETN	0.0100	n/a	n/a	0.0218
RN(LH)	!D&!E&!SETN	0.0100	n/a	n/a	0.0760
RN(LH)	!D&E&!SETN	0.0100	n/a	n/a	-0.0201
RN(LH)	D&!E&!SETN	0.0100	n/a	n/a	0.0760
RN(LH)	D&E&!SETN	0.0100	n/a	n/a	0.0469
RN(LH)	!D&!E&SETN	0.0100	n/a	n/a	-0.0202

continues on next page

Table 53 – continued from previous page

RN(LH)	!D&E&SETN	0.0100	n/a	n/a	-0.0202
RN(LH)	D&!E&SETN	0.0100	n/a	n/a	-0.0202
SETN(LH)	!D&!E&RN	0.0100	n/a	n/a	-0.0230
SETN(LH)	D&!E&RN	0.0100	n/a	n/a	-0.0231
SETN(LH)	D&E&RN	0.0100	n/a	n/a	-0.0231
E(HL)	!D&!RN&!SETN	0.0100	n/a	n/a	0.1574
E(HL)	!D&RN&!SETN	0.0100	n/a	n/a	0.2160
E(HL)	D&!RN&!SETN	0.0100	n/a	n/a	0.1578
E(HL)	D&RN&!SETN	0.0100	n/a	n/a	0.1493
E(HL)	D&RN&SETN	0.0100	n/a	n/a	0.1492
E(HL)	!D&!RN&SETN	0.0100	n/a	n/a	0.1494
E(HL)	!D&RN&SETN	0.0100	n/a	n/a	0.1493
E(HL)	D&!RN&SETN	0.0100	n/a	n/a	0.1498

LEAKAGE POWER

When Condition	Power (nW)
!D&!E&!RN&!SETN	0.3108
!D&!E&RN&!SETN	0.2928
!D&E&!RN&!SETN	0.2710
!D&E&RN&!SETN	0.2726
D&!E&!RN&!SETN	0.3110
D&!E&RN&!SETN	0.2928
D&E&!RN&!SETN	0.3115
D&E&RN&!SETN	0.2934
D&E&RN&SETN	0.3340
!D&!E&!RN&SETN	0.2980
!D&E&!RN&SETN	0.2986
!D&E&RN&SETN	0.2994
D&!E&!RN&SETN	0.2982
D&E&!RN&SETN	0.3391
!D&!E&RN&SETN	0.3244
D&!E&RN&SETN	0.3765

gf180mcu_fd_sc_mcu7t5v0__latrsnq_4

gf180mcu_fd_sc_mcu7t5v0__latrsnq_4 symbol

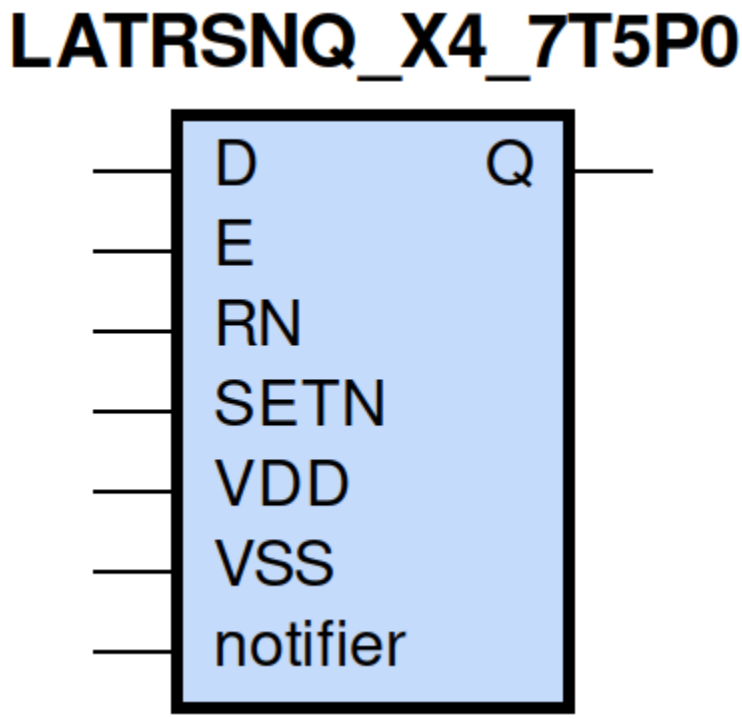

gf180mcu_fd_sc_mcu7t5v0__latrsnq_4 schematic

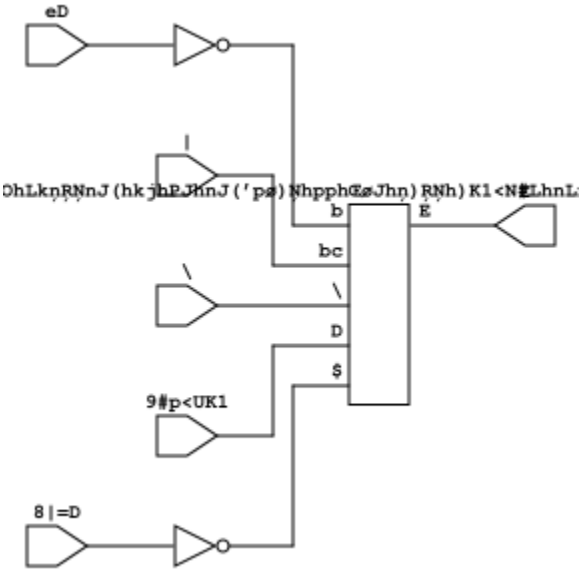

gf180mcu_fd_sc_mcu7t5v0__latrsnq_4 layout

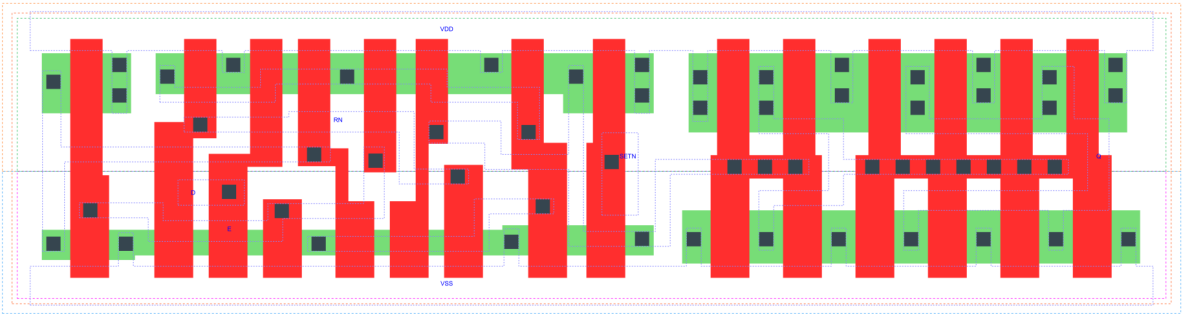

LATRSNQ_X4 is a positive D-latch, active low set/reset, 4X drive strength

Attributes

Attribute	Value
area	68.051200 μm^2

TRUTH TABLE

Input				Output
RN	SETN	D	E	Q
H	H	L	H	L
H	H	H	H	H
H	H	X	L	Q
L	H	X	X	L
H	L	X	X	H
L	L	X	X	H

FUNCTIONAL SCHEMATIC

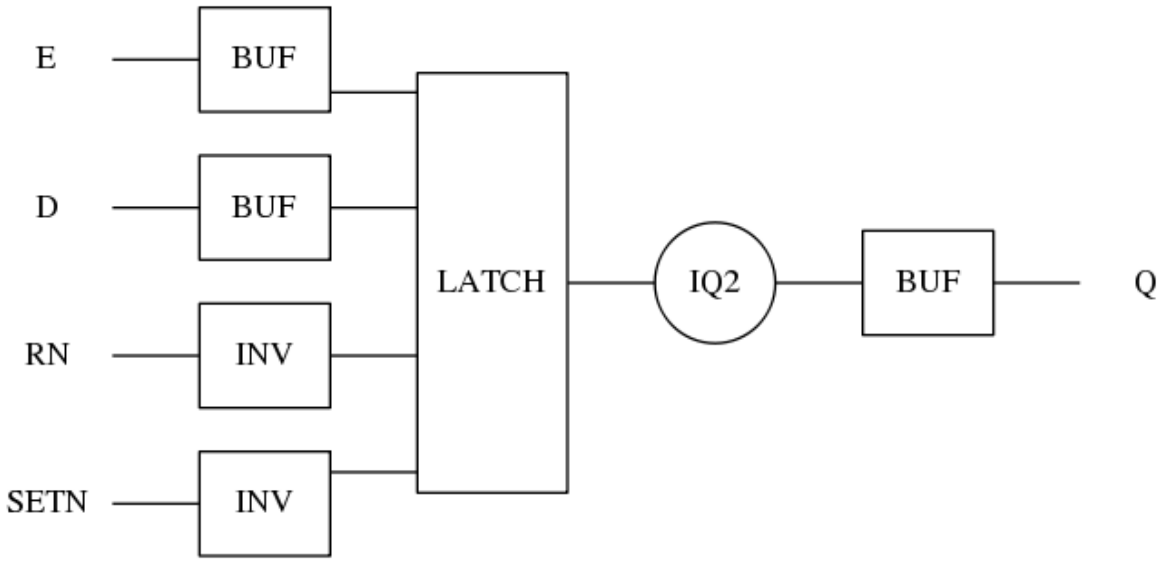

CONSTRAINTS

Constraint Pin	Related Pin	setup(ns)	hold(ns)
D(HL)	E(HL)	0.4870	-0.4060
D(LH)	E(HL)	0.5320	-0.4350
RN(LH)	SETN(LH)	0.0520	0.0460
RN(LH)	SETN(LH)	0.0520	0.0460
SETN(LH)	RN(LH)	0.0460	0.0520
SETN(LH)	RN(LH)	0.0460	0.0520

Constraint Pin	Related Pin	recovery(ns)	removal(ns)
RN(LH)	E(HL)	0.5440	-0.4470
SETN(LH)	E(HL)	0.0630	0.0860

Constraint Pin	Related Pin	Minimum Pulse Width(ns)
E(LHL)	E(LH)	0.5440
E(LHL)	E(LH)	0.4850
RN(HLH)	RN(HL)	0.3580
RN(HLH)	RN(HL)	0.3580
SETN(HLH)	SETN(HL)	0.3290
SETN(HLH)	SETN(HL)	0.3290

PIN CAPACITANCE (pf)

Pin	Type	Capacitance (pf)
E	input	0.0074
D	input	0.0031
RN	input	0.0051
SETN	input	0.0037

DELAY AND OUTPUT TRANSITION TIME corresponding to min slew and load

Input Pin	Output	When Condition	Tin (ns)	Out Load (pf)	Delay (ns)	Tout (ns)
E(LH)	Q(LH)	D&RN&SETN	0.0100	0.0010	0.7580	0.0314
E(LH)	Q(HL)	!D&RN&SETN	0.0100	0.0010	0.8704	0.0309
D(LH)	Q(LH)	E&RN&SETN	0.0100	0.0010	0.8077	0.0314
D(HL)	Q(HL)	E&RN&SETN	0.0100	0.0010	0.8277	0.0309
RN(HL)	Q(HL)	!D&!E&SETN	0.0100	0.0010	0.6780	0.0305
RN(HL)	Q(HL)	D&!E&SETN	0.0100	0.0010	0.6782	0.0305
RN(HL)	Q(HL)	D&E&SETN	0.0100	0.0010	0.6757	0.0307
RN(LH)	Q(LH)	D&E&SETN	0.0100	0.0010	0.8195	0.0313
SETN(LH)	Q(HL)	!D&!E&!RN	0.0100	0.0010	0.4406	0.0303
SETN(LH)	Q(HL)	!D&E&!RN	0.0100	0.0010	0.4468	0.0306
SETN(LH)	Q(HL)	!D&E&RN	0.0100	0.0010	0.4485	0.0305
SETN(LH)	Q(HL)	D&!E&!RN	0.0100	0.0010	0.4408	0.0304
SETN(LH)	Q(HL)	D&E&!RN	0.0100	0.0010	0.4469	0.0305
SETN(HL)	Q(LH)	!D&!E&RN	0.0100	0.0010	0.3524	0.0288
SETN(HL)	Q(LH)	D&!E&RN	0.0100	0.0010	0.3525	0.0288
SETN(HL)	Q(LH)	!D&!E&!RN	0.0100	0.0010	0.3482	0.0288
SETN(HL)	Q(LH)	!D&E&!RN	0.0100	0.0010	0.3498	0.0289
SETN(HL)	Q(LH)	!D&E&RN	0.0100	0.0010	0.3527	0.0289
SETN(HL)	Q(LH)	D&!E&!RN	0.0100	0.0010	0.3484	0.0289
SETN(HL)	Q(LH)	D&E&!RN	0.0100	0.0010	0.3498	0.0289

DYNAMIC ENERGY

Input Pin	When Condition	Tin (ns)	Output	Out Load (pf)	Energy (uW/MHz)
SETN	!D&!E&!RN	0.0100	Q(HL)	0.0010	0.7314
SETN	!D&E&!RN	0.0100	Q(HL)	0.0010	0.7439
SETN	!D&E&RN	0.0100	Q(HL)	0.0010	0.7335
SETN	D&!E&!RN	0.0100	Q(HL)	0.0010	0.7312
SETN	D&E&!RN	0.0100	Q(HL)	0.0010	0.7445

continues on next page

Table 54 – continued from previous page

SETN	!D&!E&RN	0.0100	Q(LH)	0.0010	0.8556
SETN	D&!E&RN	0.0100	Q(LH)	0.0010	0.8556
SETN	!D&!E&!RN	0.0100	Q(LH)	0.0010	0.7567
SETN	!D&E&!RN	0.0100	Q(LH)	0.0010	0.7581
SETN	!D&E&RN	0.0100	Q(LH)	0.0010	0.7662
SETN	D&!E&!RN	0.0100	Q(LH)	0.0010	0.7575
SETN	D&E&!RN	0.0100	Q(LH)	0.0010	0.7581
E	D&RN&SETN	0.0100	Q(LH)	0.0010	0.9147
RN	!D&!E&SETN	0.0100	Q(HL)	0.0010	0.9669
RN	D&!E&SETN	0.0100	Q(HL)	0.0010	0.9686
RN	D&E&SETN	0.0100	Q(HL)	0.0010	1.0050
E	!D&RN&SETN	0.0100	Q(HL)	0.0010	0.9660
RN	D&E&SETN	0.0100	Q(LH)	0.0010	0.9109
D	E&RN&SETN	0.0100	Q(LH)	0.0010	0.9102
D	E&RN&SETN	0.0100	Q(HL)	0.0010	0.9899
SETN(HL)	!D&!E&RN	0.0100	n/a	n/a	0.0322
SETN(HL)	D&!E&RN	0.0100	n/a	n/a	0.0322
SETN(HL)	D&E&RN	0.0100	n/a	n/a	0.0322
D(HL)	!E&!RN&!SETN	0.0100	n/a	n/a	0.0264
D(HL)	!E&RN&!SETN	0.0100	n/a	n/a	0.0201
D(HL)	E&!RN&!SETN	0.0100	n/a	n/a	0.0222
D(HL)	E&RN&!SETN	0.0100	n/a	n/a	0.1977
D(HL)	!E&!RN&SETN	0.0100	n/a	n/a	0.0264
D(HL)	E&!RN&SETN	0.0100	n/a	n/a	0.0222
D(HL)	!E&RN&SETN	0.0100	n/a	n/a	0.0217
E(LH)	!D&!RN&!SETN	0.0100	n/a	n/a	0.0082
E(LH)	!D&RN&!SETN	0.0100	n/a	n/a	0.1695
E(LH)	D&!RN&!SETN	0.0100	n/a	n/a	0.0279
E(LH)	D&RN&!SETN	0.0100	n/a	n/a	0.0055
E(LH)	!D&!RN&SETN	0.0100	n/a	n/a	0.0072
E(LH)	D&!RN&SETN	0.0100	n/a	n/a	0.0269
E(LH)	!D&RN&SETN	0.0100	n/a	n/a	0.0000
E(LH)	D&RN&SETN	0.0100	n/a	n/a	-0.0005
D(LH)	!E&!RN&!SETN	0.0100	n/a	n/a	-0.0198
D(LH)	!E&RN&!SETN	0.0100	n/a	n/a	-0.0173
D(LH)	E&!RN&!SETN	0.0100	n/a	n/a	-0.0159
D(LH)	E&RN&!SETN	0.0100	n/a	n/a	0.0459
D(LH)	!E&!RN&SETN	0.0100	n/a	n/a	-0.0198
D(LH)	E&!RN&SETN	0.0100	n/a	n/a	-0.0159
D(LH)	!E&RN&SETN	0.0100	n/a	n/a	-0.0198
RN(HL)	!D&!E&!SETN	0.0100	n/a	n/a	0.1872
RN(HL)	!D&E&!SETN	0.0100	n/a	n/a	0.0245
RN(HL)	D&!E&!SETN	0.0100	n/a	n/a	0.1890
RN(HL)	D&E&!SETN	0.0100	n/a	n/a	0.2180
RN(HL)	!D&!E&SETN	0.0100	n/a	n/a	0.0219
RN(HL)	D&!E&SETN	0.0100	n/a	n/a	0.0238
RN(HL)	!D&E&SETN	0.0100	n/a	n/a	0.0219
RN(LH)	!D&!E&!SETN	0.0100	n/a	n/a	0.0760
RN(LH)	!D&E&!SETN	0.0100	n/a	n/a	-0.0201
RN(LH)	D&!E&!SETN	0.0100	n/a	n/a	0.0760
RN(LH)	D&E&!SETN	0.0100	n/a	n/a	0.0469
RN(LH)	!D&!E&SETN	0.0100	n/a	n/a	-0.0202

continues on next page

Table 54 – continued from previous page

RN(LH)	!D&E&SETN	0.0100	n/a	n/a	-0.0202
RN(LH)	D&!E&SETN	0.0100	n/a	n/a	-0.0202
SETN(LH)	!D&!E&RN	0.0100	n/a	n/a	-0.0231
SETN(LH)	D&!E&RN	0.0100	n/a	n/a	-0.0230
SETN(LH)	D&E&RN	0.0100	n/a	n/a	-0.0231
E(HL)	!D&!RN&!SETN	0.0100	n/a	n/a	0.1574
E(HL)	!D&RN&!SETN	0.0100	n/a	n/a	0.2159
E(HL)	D&!RN&!SETN	0.0100	n/a	n/a	0.1577
E(HL)	D&RN&!SETN	0.0100	n/a	n/a	0.1493
E(HL)	D&RN&SETN	0.0100	n/a	n/a	0.1493
E(HL)	!D&!RN&SETN	0.0100	n/a	n/a	0.1494
E(HL)	!D&RN&SETN	0.0100	n/a	n/a	0.1494
E(HL)	D&!RN&SETN	0.0100	n/a	n/a	0.1498

LEAKAGE POWER

When Condition	Power (nW)
!D&!E&!RN&!SETN	0.3882
!D&!E&RN&!SETN	0.3702
!D&E&!RN&!SETN	0.3484
!D&E&RN&!SETN	0.3500
D&!E&!RN&!SETN	0.3884
D&!E&RN&!SETN	0.3702
D&E&!RN&!SETN	0.3889
D&E&RN&!SETN	0.3708
D&E&RN&SETN	0.4114
!D&!E&!RN&SETN	0.3765
!D&E&!RN&SETN	0.3771
!D&E&RN&SETN	0.3778
D&!E&!RN&SETN	0.3767
D&E&!RN&SETN	0.4176
!D&!E&RN&SETN	0.4029
D&!E&RN&SETN	0.4539

gf180mcu_fd_sc_mcu7t5v0__latsnq_1

gf180mcu_fd_sc_mcu7t5v0__latsnq_1 symbol

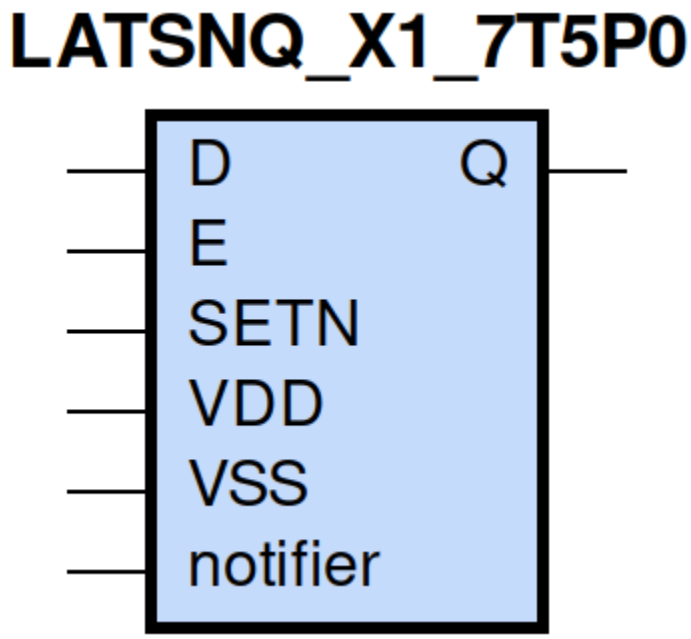

gf180mcu_fd_sc_mcu7t5v0__latsnq_1 schematic

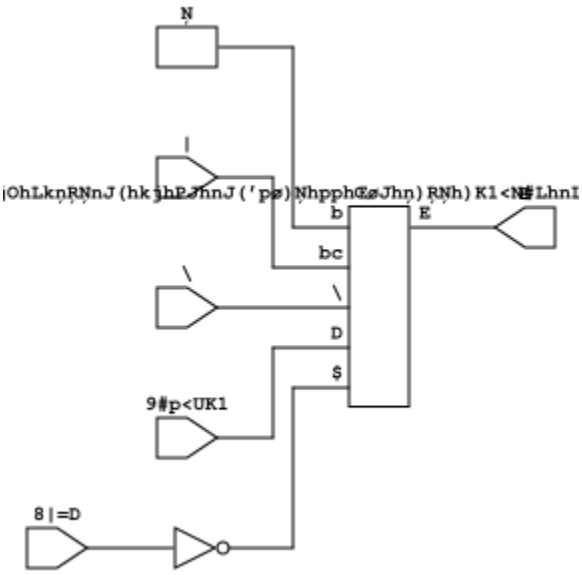

gf180mcu_fd_sc_mcu7t5v0__latsnq_1 layout

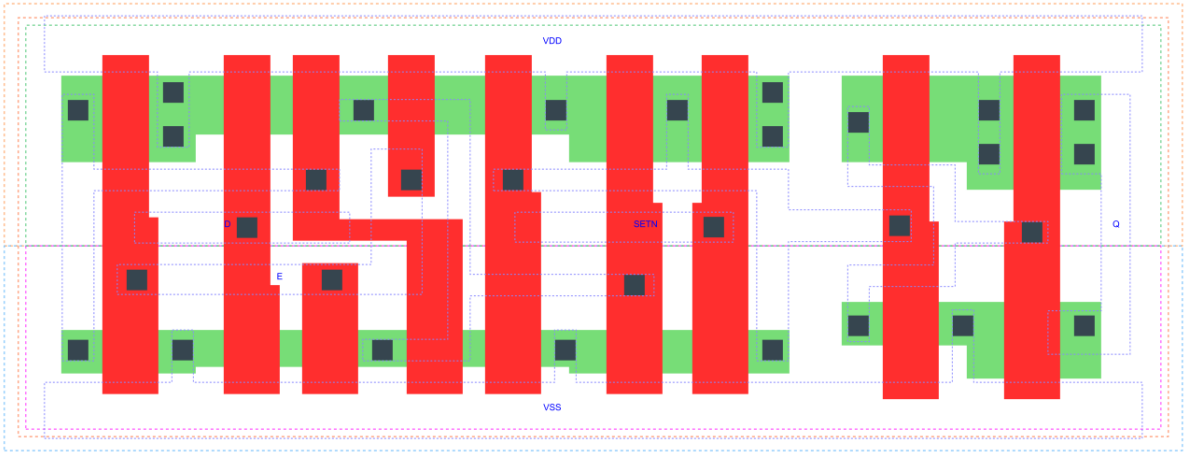

LATSNQ_X1 is a positive D-latch, active low set, 1X drive strength

Attributes

Attribute	Value
area	46.099200 μm^2

TRUTH TABLE

Input			Output
SETN	D	E	Q
H	L	H	L
H	H	H	H
H	X	L	Q
L	X	X	H

FUNCTIONAL SCHEMATIC

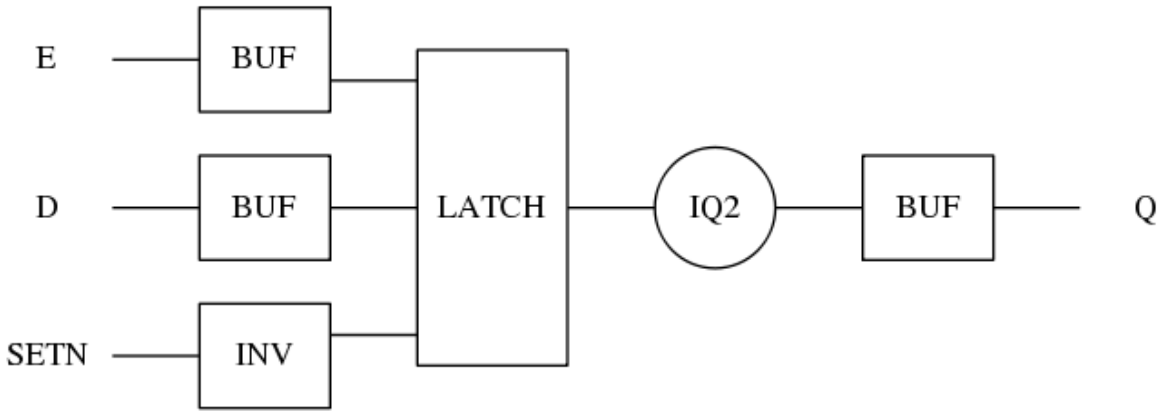

CONSTRAINTS

Constraint Pin	Related Pin	setup(ns)	hold(ns)
D(HL)	E(HL)	0.3780	-0.3320
D(LH)	E(HL)	0.2750	-0.2230

Constraint Pin	Related Pin	recovery(ns)	removal(ns)
SETN(LH)	E(HL)	0.0060	0.0630

Constraint Pin	Related Pin	Minimum Pulse Width(ns)
E(LHL)	E(LH)	0.4560
E(LHL)	E(LH)	0.2410
SETN(HLH)	SETN(HL)	0.2220
SETN(HLH)	SETN(HL)	0.2220

PIN CAPACITANCE (pf)

Pin	Type	Capacitance (pf)
E	input	0.0071
D	input	0.0033
SETN	input	0.0040

DELAY AND OUTPUT TRANSITION TIME corresponding to min slew and load

Input Pin	Output	When Condition	Tin (ns)	Out Load (pf)	Delay (ns)	Tout (ns)
E(LH)	Q(LH)	D&SETN	0.0100	0.0010	0.4876	0.0403
E(LH)	Q(HL)	!D&SETN	0.0100	0.0010	0.7183	0.0347
D(LH)	Q(LH)	E&SETN	0.0100	0.0010	0.5189	0.0401
D(HL)	Q(HL)	E&SETN	0.0100	0.0010	0.6673	0.0347
SETN(LH)	Q(HL)	!D&E	0.0100	0.0010	0.3427	0.0344
SETN(HL)	Q(LH)	!D&!E	0.0100	0.0010	0.3056	0.0400
SETN(HL)	Q(LH)	D&!E	0.0100	0.0010	0.3056	0.0400
SETN(HL)	Q(LH)	!D&E	0.0100	0.0010	0.3046	0.0400

DYNAMIC ENERGY

Input Pin	When Condition	Tin (ns)	Output	Out Load (pf)	Energy (uW/MHz)
SETN	!D&E	0.0100	Q(HL)	0.0010	0.2277
SETN	!D&!E	0.0100	Q(LH)	0.0010	0.4126
SETN	D&!E	0.0100	Q(LH)	0.0010	0.4127
SETN	!D&E	0.0100	Q(LH)	0.0010	0.3241
E	D&SETN	0.0100	Q(LH)	0.0010	0.3772
E	!D&SETN	0.0100	Q(HL)	0.0010	0.4183
D	E&SETN	0.0100	Q(LH)	0.0010	0.3721
D	E&SETN	0.0100	Q(HL)	0.0010	0.4388
SETN(HL)	!D&!E	0.0100	n/a	n/a	0.0322
SETN(HL)	D&!E	0.0100	n/a	n/a	0.0323
SETN(HL)	D&E	0.0100	n/a	n/a	0.0322
D(HL)	!E&!SETN	0.0100	n/a	n/a	0.0201
D(HL)	E&!SETN	0.0100	n/a	n/a	0.1592
D(HL)	!E&SETN	0.0100	n/a	n/a	0.0217
E(LH)	!D&!SETN	0.0100	n/a	n/a	0.1347
E(LH)	D&!SETN	0.0100	n/a	n/a	0.0054
E(LH)	!D&SETN	0.0100	n/a	n/a	0.0000
E(LH)	D&SETN	0.0100	n/a	n/a	-0.0005
D(LH)	!E&!SETN	0.0100	n/a	n/a	-0.0173
D(LH)	E&!SETN	0.0100	n/a	n/a	0.0431
D(LH)	!E&SETN	0.0100	n/a	n/a	-0.0198
SETN(LH)	!D&!E	0.0100	n/a	n/a	-0.0230
SETN(LH)	D&!E	0.0100	n/a	n/a	-0.0229
SETN(LH)	D&E	0.0100	n/a	n/a	-0.0229
E(HL)	!D&!SETN	0.0100	n/a	n/a	0.2145
E(HL)	D&!SETN	0.0100	n/a	n/a	0.1497
E(HL)	D&SETN	0.0100	n/a	n/a	0.1497
E(HL)	!D&SETN	0.0100	n/a	n/a	0.1473

LEAKAGE POWER

When Condition	Power (nW)
!D&!E&!SETN	0.2410
!D&E&!SETN	0.2470
D&!E&!SETN	0.2410
D&E&!SETN	0.2416
D&E&SETN	0.2823
!D&!E&SETN	0.2992
D&!E&SETN	0.3393
!D&E&SETN	0.2734

gf180mcu_fd_sc_mcu7t5v0__latsnq_2

gf180mcu_fd_sc_mcu7t5v0__latsnq_2 symbol

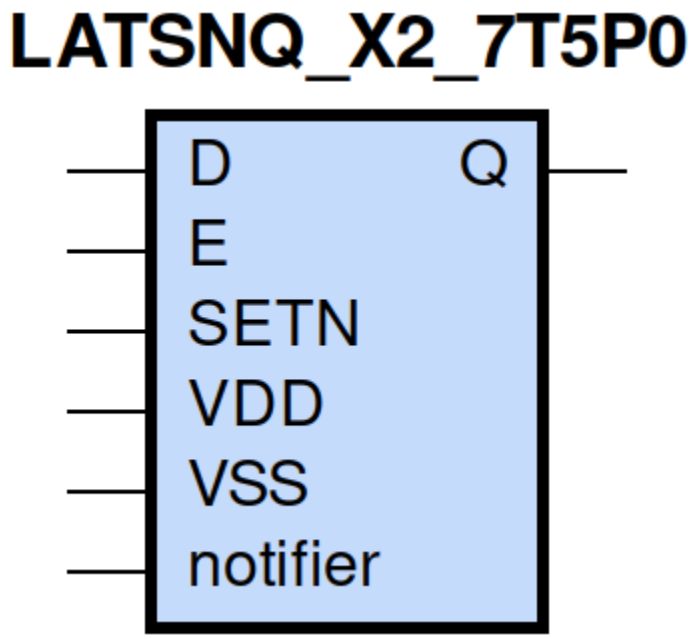

gf180mcu_fd_sc_mcu7t5v0__latsnq_2 schematic

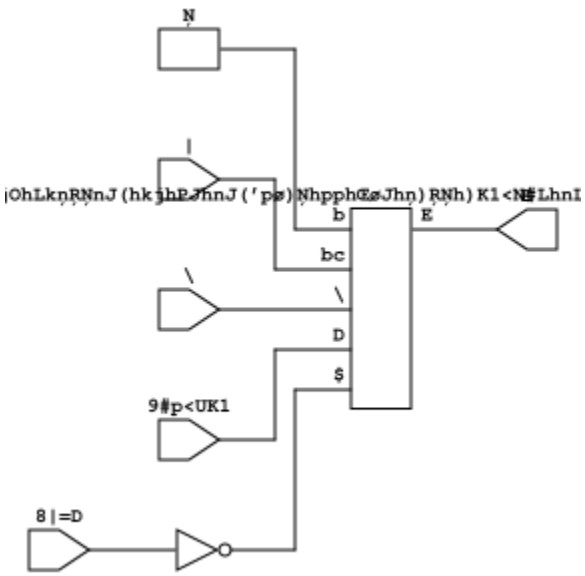

gf180mcu_fd_sc_mcu7t5v0__latsnq_2 layout

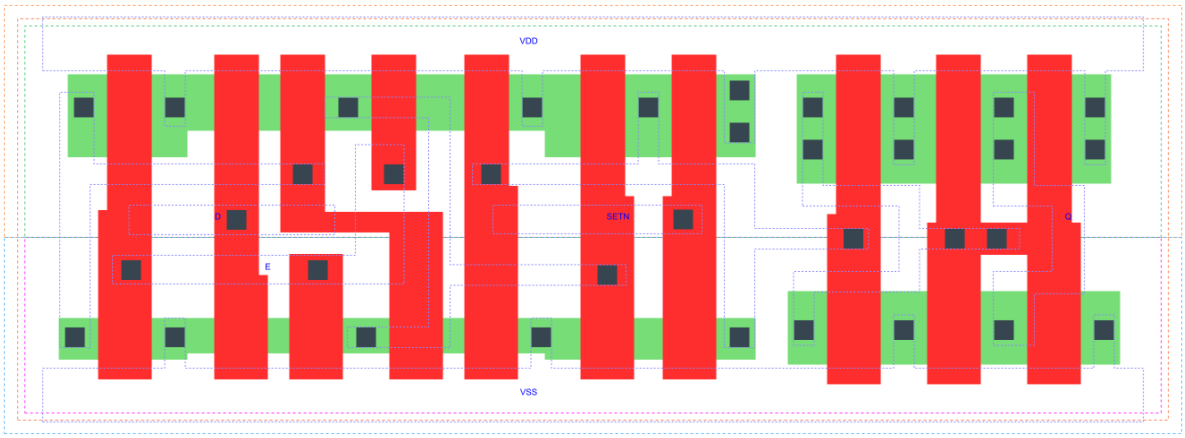

LATSNQ_X2 is a positive D-latch, active low set, 2X drive strength

Attributes

Attribute	Value
area	48.294400 μm^2

TRUTH TABLE

Input			Output
SETN	D	E	Q
H	L	H	L
H	H	H	H
H	X	L	Q
L	X	X	H

FUNCTIONAL SCHEMATIC

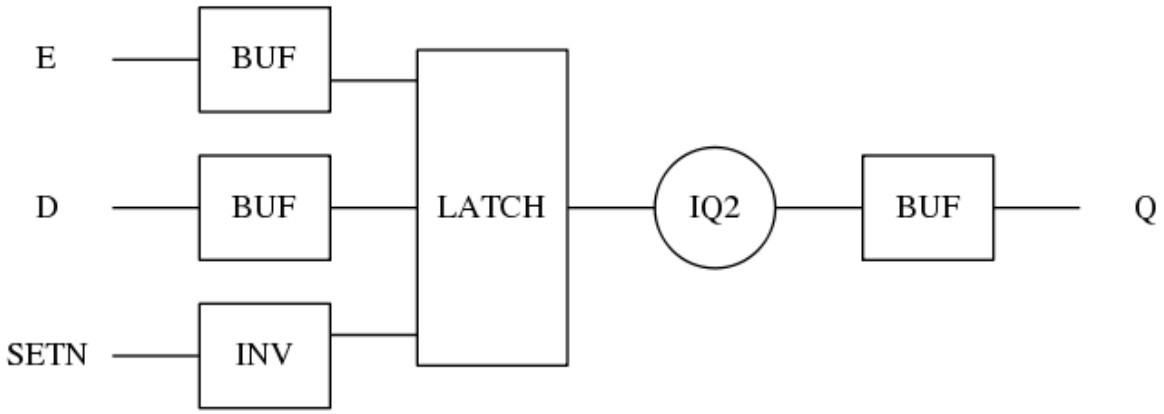

CONSTRAINTS

Constraint Pin	Related Pin	setup(ns)	hold(ns)
D(HL)	E(HL)	0.3950	-0.3440
D(LH)	E(HL)	0.2860	-0.2290

Constraint Pin	Related Pin	recovery(ns)	removal(ns)
SETN(LH)	E(HL)	0.0290	0.0520

Constraint Pin	Related Pin	Minimum Pulse Width(ns)
E(LHL)	E(LH)	0.4660
E(LHL)	E(LH)	0.2610
SETN(HLH)	SETN(HL)	0.2410
SETN(HLH)	SETN(HL)	0.2410

PIN CAPACITANCE (pf)

Pin	Type	Capacitance (pf)
E	input	0.0071
D	input	0.0033
SETN	input	0.0040

DELAY AND OUTPUT TRANSITION TIME corresponding to min slew and load

Input Pin	Output	When Condition	Tin (ns)	Out Load (pf)	Delay (ns)	Tout (ns)
E(LH)	Q(LH)	D&SETN	0.0100	0.0010	0.4874	0.0299
E(LH)	Q(HL)	!D&SETN	0.0100	0.0010	0.7545	0.0313
D(LH)	Q(LH)	E&SETN	0.0100	0.0010	0.5187	0.0296
D(HL)	Q(HL)	E&SETN	0.0100	0.0010	0.7036	0.0312
SETN(LH)	Q(HL)	!D&E	0.0100	0.0010	0.3777	0.0309
SETN(HL)	Q(LH)	!D&!E	0.0100	0.0010	0.3051	0.0296
SETN(HL)	Q(LH)	D&!E	0.0100	0.0010	0.3053	0.0296
SETN(HL)	Q(LH)	!D&E	0.0100	0.0010	0.3046	0.0297

DYNAMIC ENERGY

Input Pin	When Condition	Tin (ns)	Output	Out Load (pf)	Energy (uW/MHz)
SETN	!D&E	0.0100	Q(HL)	0.0010	0.3747
SETN	!D&!E	0.0100	Q(LH)	0.0010	0.5260
SETN	D&!E	0.0100	Q(LH)	0.0010	0.5262
SETN	!D&E	0.0100	Q(LH)	0.0010	0.4375
E	D&SETN	0.0100	Q(LH)	0.0010	0.4926
E	!D&SETN	0.0100	Q(HL)	0.0010	0.5671
D	E&SETN	0.0100	Q(LH)	0.0010	0.4874
D	E&SETN	0.0100	Q(HL)	0.0010	0.5870
SETN(HL)	!D&!E	0.0100	n/a	n/a	0.0323
SETN(HL)	D&!E	0.0100	n/a	n/a	0.0323
SETN(HL)	D&E	0.0100	n/a	n/a	0.0322
D(HL)	!E&!SETN	0.0100	n/a	n/a	0.0201
D(HL)	E&!SETN	0.0100	n/a	n/a	0.1592
D(HL)	!E&SETN	0.0100	n/a	n/a	0.0217
E(LH)	!D&!SETN	0.0100	n/a	n/a	0.1348
E(LH)	D&!SETN	0.0100	n/a	n/a	0.0054
E(LH)	!D&SETN	0.0100	n/a	n/a	0.0000
E(LH)	D&SETN	0.0100	n/a	n/a	-0.0005
D(LH)	!E&!SETN	0.0100	n/a	n/a	-0.0173
D(LH)	E&!SETN	0.0100	n/a	n/a	0.0431
D(LH)	!E&SETN	0.0100	n/a	n/a	-0.0198
SETN(LH)	!D&!E	0.0100	n/a	n/a	-0.0229
SETN(LH)	D&!E	0.0100	n/a	n/a	-0.0229
SETN(LH)	D&E	0.0100	n/a	n/a	-0.0229
E(HL)	!D&!SETN	0.0100	n/a	n/a	0.2142
E(HL)	D&!SETN	0.0100	n/a	n/a	0.1493
E(HL)	D&SETN	0.0100	n/a	n/a	0.1493
E(HL)	!D&SETN	0.0100	n/a	n/a	0.1468

LEAKAGE POWER

When Condition	Power (nW)
!D&!E&!SETN	0.2667
!D&E&!SETN	0.2726
D&!E&!SETN	0.2667
D&E&!SETN	0.2672
D&E&SETN	0.3079
!D&!E&SETN	0.3254
D&!E&SETN	0.3650
!D&E&SETN	0.2996

gf180mcu_fd_sc_mcu7t5v0__latsnq_4

gf180mcu_fd_sc_mcu7t5v0__latsnq_4 symbol

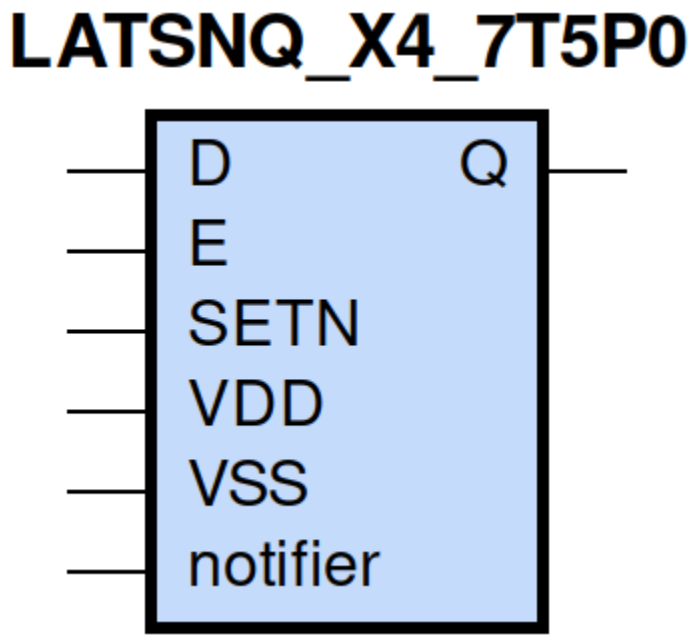

gf180mcu_fd_sc_mcu7t5v0__latsnq_4 schematic

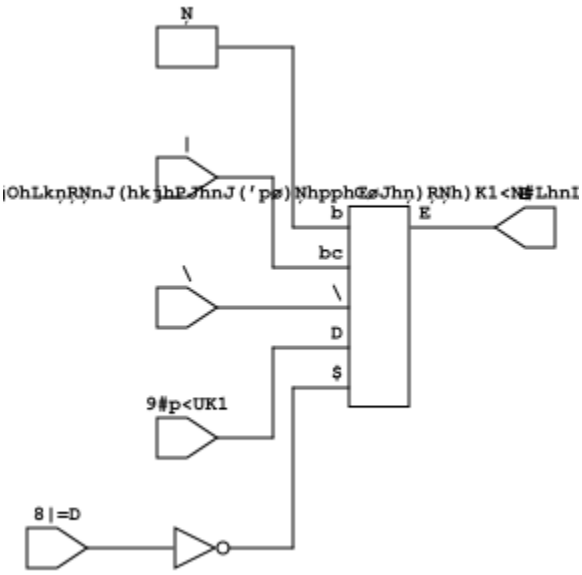

gf180mcu_fd_sc_mcu7t5v0__latsnq_4 layout

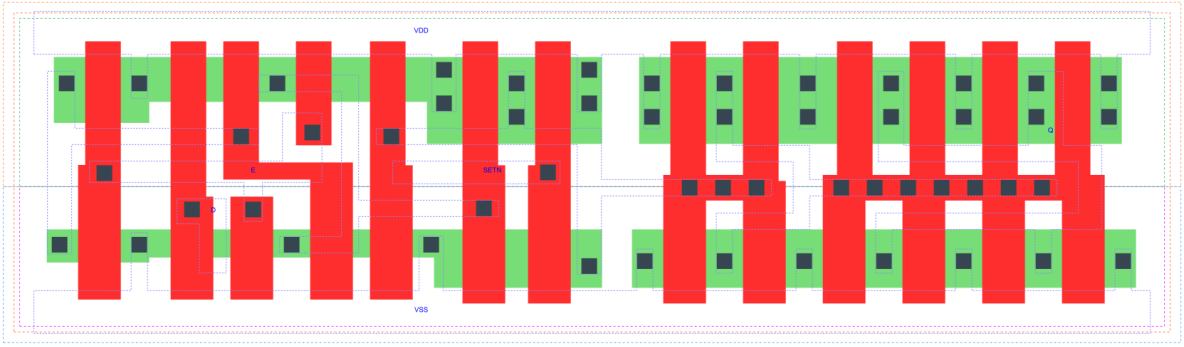

LATSNQ_X4 is a positive D-latch, active low set, 4X drive strength

Attributes

Attribute	Value
area	61.465600 μm^2

TRUTH TABLE

Input			Output
SETN	D	E	Q
H	L	H	L
H	H	H	H
H	X	L	Q
L	X	X	H

FUNCTIONAL SCHEMATIC

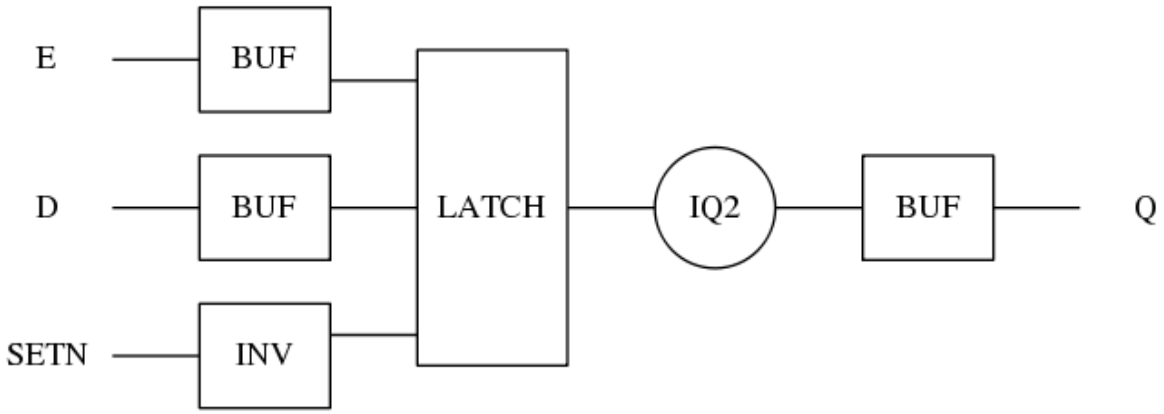

CONSTRAINTS

Constraint Pin	Related Pin	setup(ns)	hold(ns)
D(HL)	E(HL)	0.4060	-0.3550
D(LH)	E(HL)	0.3260	-0.2580

Constraint Pin	Related Pin	recovery(ns)	removal(ns)
SETN(LH)	E(HL)	0.0110	0.0860

Constraint Pin	Related Pin	Minimum Pulse Width(ns)
E(LHL)	E(LH)	0.4760
E(LHL)	E(LH)	0.3000
SETN(HLH)	SETN(HL)	0.2610
SETN(HLH)	SETN(HL)	0.2610

PIN CAPACITANCE (pf)

Pin	Type	Capacitance (pf)
E	input	0.0071
D	input	0.0029
SETN	input	0.0053

DELAY AND OUTPUT TRANSITION TIME corresponding to min slew and load

Input Pin	Output	When Condition	Tin (ns)	Out Load (pf)	Delay (ns)	Tout (ns)
E(LH)	Q(LH)	D&SETN	0.0100	0.0010	0.5196	0.0287
E(LH)	Q(HL)	!D&SETN	0.0100	0.0010	0.7396	0.0288
D(LH)	Q(LH)	E&SETN	0.0100	0.0010	0.5514	0.0287
D(HL)	Q(HL)	E&SETN	0.0100	0.0010	0.6919	0.0288
SETN(LH)	Q(HL)	!D&E	0.0100	0.0010	0.3359	0.0285
SETN(HL)	Q(LH)	!D&!E	0.0100	0.0010	0.3116	0.0280
SETN(HL)	Q(LH)	D&!E	0.0100	0.0010	0.3117	0.0280
SETN(HL)	Q(LH)	!D&E	0.0100	0.0010	0.3110	0.0283

DYNAMIC ENERGY

Input Pin	When Condition	Tin (ns)	Output	Out Load (pf)	Energy (uW/MHz)
SETN	!D&E	0.0100	Q(HL)	0.0010	0.6727
SETN	!D&!E	0.0100	Q(LH)	0.0010	0.8611
SETN	D&!E	0.0100	Q(LH)	0.0010	0.8612
SETN	!D&E	0.0100	Q(LH)	0.0010	0.7607
E	D&SETN	0.0100	Q(LH)	0.0010	0.8479
E	!D&SETN	0.0100	Q(HL)	0.0010	0.9129
D	E&SETN	0.0100	Q(LH)	0.0010	0.8427
D	E&SETN	0.0100	Q(HL)	0.0010	0.9327
SETN(HL)	!D&!E	0.0100	n/a	n/a	0.0439
SETN(HL)	D&!E	0.0100	n/a	n/a	0.0439
SETN(HL)	D&E	0.0100	n/a	n/a	0.0439
D(HL)	!E&!SETN	0.0100	n/a	n/a	0.0201
D(HL)	E&!SETN	0.0100	n/a	n/a	0.1700
D(HL)	!E&SETN	0.0100	n/a	n/a	0.0217
E(LH)	!D&!SETN	0.0100	n/a	n/a	0.1450
E(LH)	D&!SETN	0.0100	n/a	n/a	0.0054
E(LH)	!D&SETN	0.0100	n/a	n/a	-0.0001
E(LH)	D&SETN	0.0100	n/a	n/a	-0.0006
D(LH)	!E&!SETN	0.0100	n/a	n/a	-0.0173
D(LH)	E&!SETN	0.0100	n/a	n/a	0.0527
D(LH)	!E&SETN	0.0100	n/a	n/a	-0.0198
SETN(LH)	!D&!E	0.0100	n/a	n/a	-0.0291
SETN(LH)	D&!E	0.0100	n/a	n/a	-0.0291
SETN(LH)	D&E	0.0100	n/a	n/a	-0.0291
E(HL)	!D&!SETN	0.0100	n/a	n/a	0.2207
E(HL)	D&!SETN	0.0100	n/a	n/a	0.1467
E(HL)	D&SETN	0.0100	n/a	n/a	0.1466
E(HL)	!D&SETN	0.0100	n/a	n/a	0.1442

LEAKAGE POWER

When Condition	Power (nW)
!D&!E&!SETN	0.3440
!D&E&!SETN	0.3497
D&!E&!SETN	0.3440
D&E&!SETN	0.3445
D&E&SETN	0.3847
!D&!E&SETN	0.4039
D&!E&SETN	0.4417
!D&E&SETN	0.3784

gf180mcu_fd_sc_mcu7t5v0__mux2_1

gf180mcu_fd_sc_mcu7t5v0__mux2_1 symbol

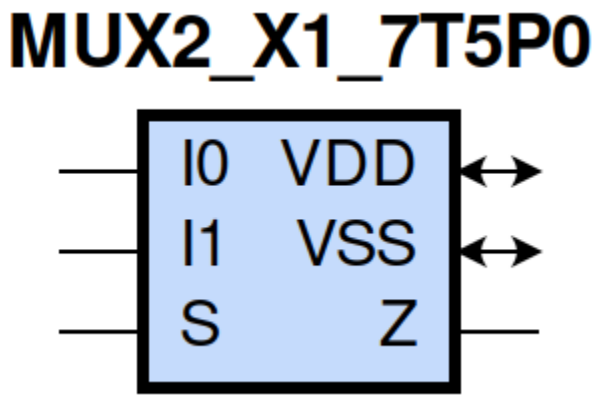

gf180mcu_fd_sc_mcu7t5v0__mux2_1 schematic

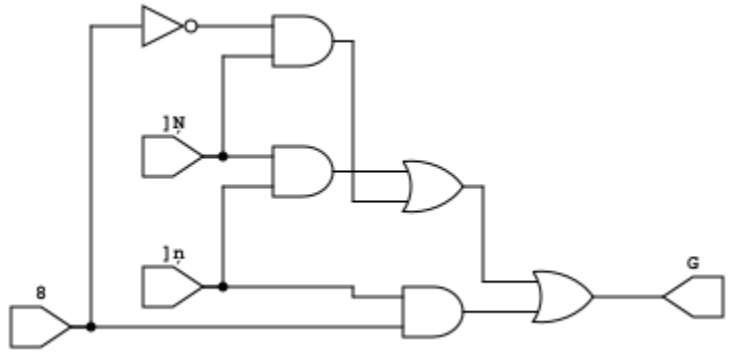

gf180mcu_fd_sc_mcu7t5v0__mux2_1 layout

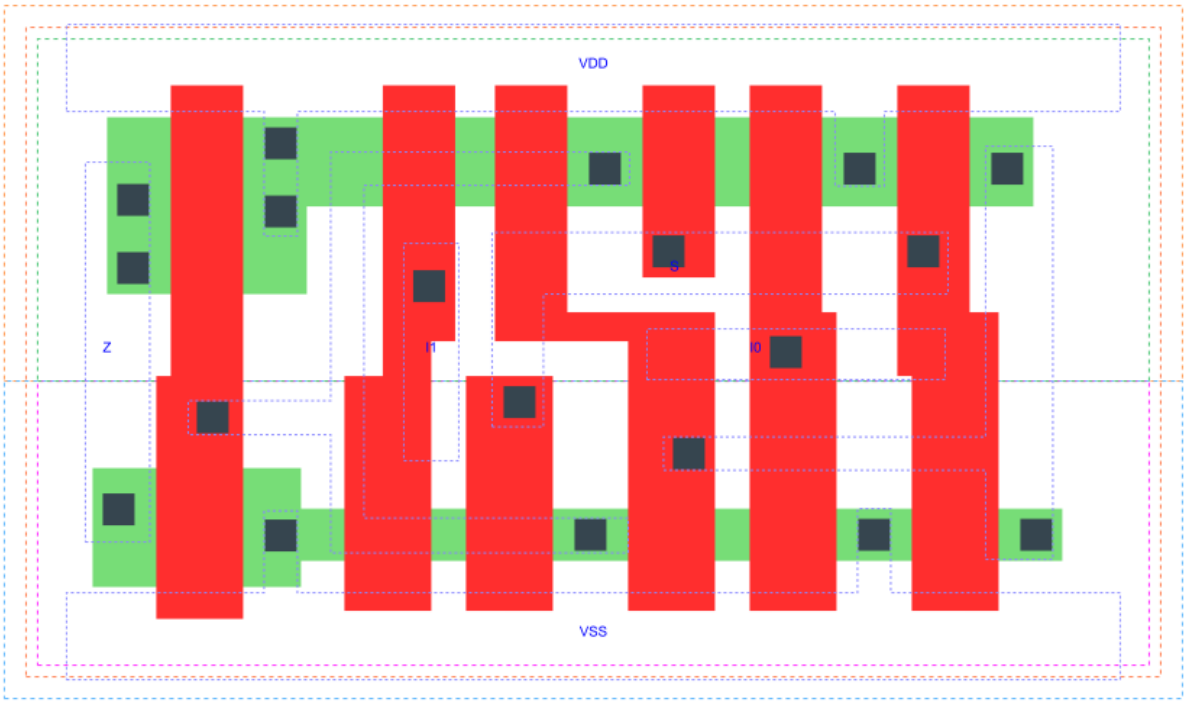

MUX2_X1 is a 2-to-1 multiplexer, 1X drive strength | | Attributes

Attribute	Value
area	28.537600 μm^2

OUTPUT FUNCTIONS

Output Pin	Function
Z	((I0&(!S))|(I1&S))

TRUTH TABLE FOR Z

I0	I1	S	Z
1	?	0	1
?	1	1	1
0	?	0	0
?	0	1	0

FUNCTIONAL SCHEMATIC

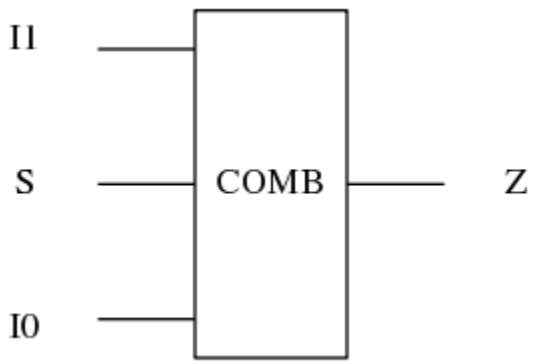

PIN CAPACITANCE (pf)

Pin	Type	Capacitance (pf)
I1	input	0.0029
S	input	0.0063
I0	input	0.0032

DELAY AND OUTPUT TRANSITION TIME corresponding to min slew and load

Input Pin	Output	When Condition	Tin (ns)	Out Load (pf)	Delay (ns)	Tout (ns)
I1(HL)	Z(HL)	!I0&S	0.0100	0.0010	0.3569	0.0631
I1(HL)	Z(HL)	I0&S	0.0100	0.0010	0.3569	0.0631
I1(LH)	Z(LH)	!I0&S	0.0100	0.0010	0.2795	0.0506
I1(LH)	Z(LH)	I0&S	0.0100	0.0010	0.2795	0.0507
S(LH)	Z(HL)	I0&!I1	0.0100	0.0010	0.4107	0.0630
S(HL)	Z(HL)	!I0&I1	0.0100	0.0010	0.3012	0.0612
S(LH)	Z(LH)	!I0&I1	0.0100	0.0010	0.2427	0.0502
S(HL)	Z(LH)	I0&!I1	0.0100	0.0010	0.3876	0.0510
I0(HL)	Z(HL)	!I1&!S	0.0100	0.0010	0.3540	0.0632
I0(HL)	Z(HL)	I1&!S	0.0100	0.0010	0.3540	0.0632
I0(LH)	Z(LH)	!I1&!S	0.0100	0.0010	0.2825	0.0508
I0(LH)	Z(LH)	I1&!S	0.0100	0.0010	0.2825	0.0507

DYNAMIC ENERGY

Input Pin	When Condition	Tin (ns)	Output	Out Load (pf)	Energy (uW/MHz)
I0	!I1&!S	0.0100	Z(HL)	0.0010	0.2679
I0	I1&!S	0.0100	Z(HL)	0.0010	0.2679
S	I0&!I1	0.0100	Z(HL)	0.0010	0.2591
S	!I0&I1	0.0100	Z(HL)	0.0010	0.3492
I1	!I0&S	0.0100	Z(HL)	0.0010	0.2815
I1	I0&S	0.0100	Z(HL)	0.0010	0.2815
I0	!I1&!S	0.0100	Z(LH)	0.0010	0.1500
I0	I1&!S	0.0100	Z(LH)	0.0010	0.1501
S	!I0&I1	0.0100	Z(LH)	0.0010	0.1376
S	I0&!I1	0.0100	Z(LH)	0.0010	0.2867
I1	!I0&S	0.0100	Z(LH)	0.0010	0.1365
I1	I0&S	0.0100	Z(LH)	0.0010	0.1365
I0(HL)	!I1&S	0.0100	n/a	n/a	0.0216
I0(HL)	I1&S	0.0100	n/a	n/a	0.0197
S(HL)	!I0&!I1	0.0100	n/a	n/a	0.1286
S(HL)	I0&I1	0.0100	n/a	n/a	0.1259
I0(LH)	!I1&S	0.0100	n/a	n/a	-0.0191
I0(LH)	I1&S	0.0100	n/a	n/a	-0.0166
S(LH)	!I0&!I1	0.0100	n/a	n/a	0.0080
S(LH)	I0&I1	0.0100	n/a	n/a	0.0074
I1(LH)	!I0&!S	0.0100	n/a	n/a	-0.0194
I1(LH)	I0&!S	0.0100	n/a	n/a	-0.0169
I1(HL)	!I0&!S	0.0100	n/a	n/a	0.0216
I1(HL)	I0&!S	0.0100	n/a	n/a	0.0197

LEAKAGE POWER

When Condition	Power (nW)
!I0&!I1&!S	0.1976
!I0&!I1&S	0.1962
!I0&I1&!S	0.1996
I0&!I1&S	0.1982
!I0&I1&S	0.1898
I0&!I1&!S	0.1913
I0&I1&!S	0.1913
I0&I1&S	0.1898

gf180mcu_fd_sc_mcu7t5v0__mux2_2

gf180mcu_fd_sc_mcu7t5v0__mux2_2 symbol

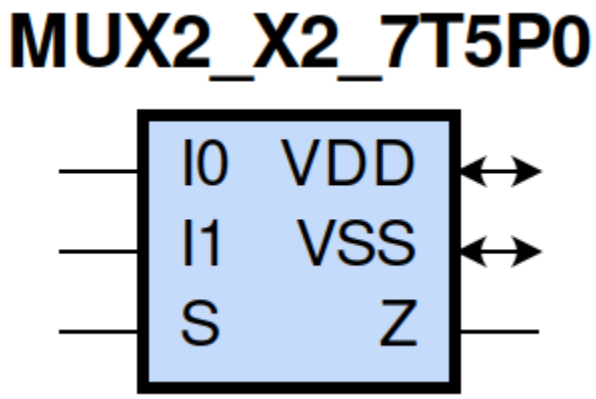

gf180mcu_fd_sc_mcu7t5v0__mux2_2 schematic

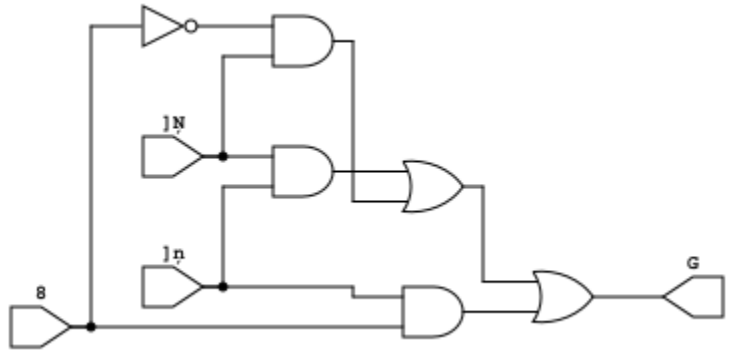

gf180mcu_fd_sc_mcu7t5v0__mux2_2 layout

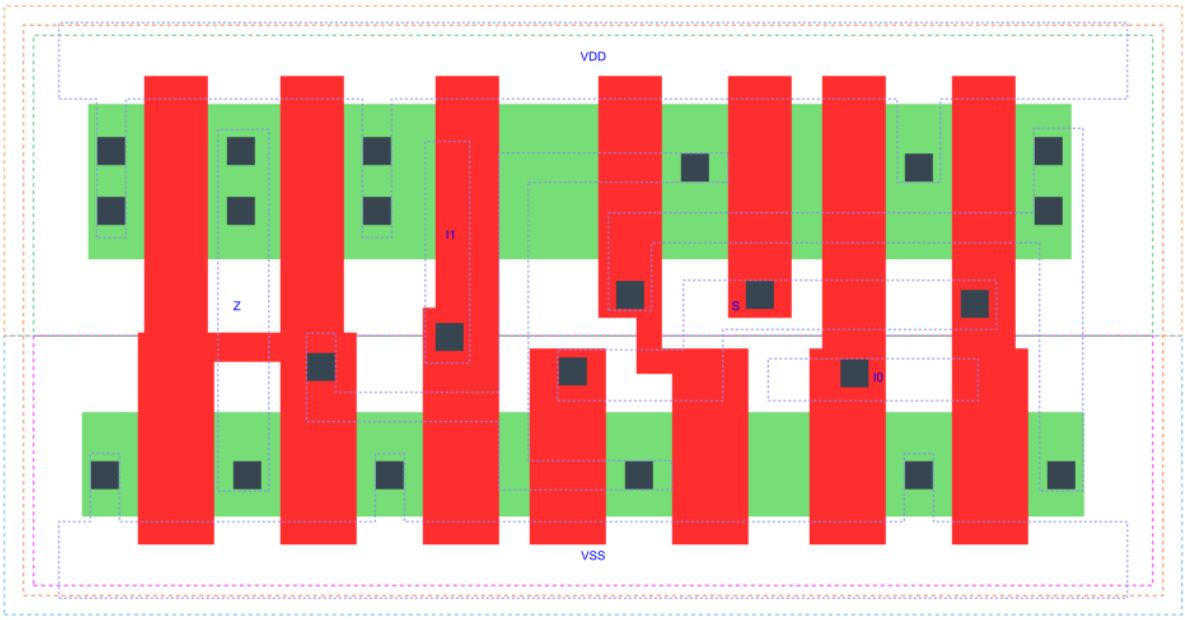

MUX2_X2 is a 2-to-1 multiplexer, 2X drive strength | | Attributes

Attribute	Value
area	32.928000 μm^2

OUTPUT FUNCTIONS

Output Pin	Function
Z	((I0&(!S))|(I1&S))

TRUTH TABLE FOR Z

I0	I1	S	Z
1	?	0	1
?	1	1	1
0	?	0	0
?	0	1	0

FUNCTIONAL SCHEMATIC

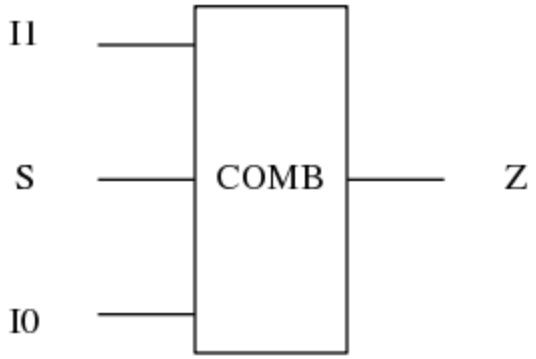

PIN CAPACITANCE (pf)

Pin	Type	Capacitance (pf)
I1	input	0.0047
S	input	0.0101
I0	input	0.0047

DELAY AND OUTPUT TRANSITION TIME corresponding to min slew and load

Input Pin	Output	When Condition	Tin (ns)	Out Load (pf)	Delay (ns)	Tout (ns)
I1(HL)	Z(HL)	!I0&S	0.0100	0.0010	0.3162	0.0491
I1(HL)	Z(HL)	I0&S	0.0100	0.0010	0.3161	0.0491
I1(LH)	Z(LH)	!I0&S	0.0100	0.0010	0.2377	0.0376
I1(LH)	Z(LH)	I0&S	0.0100	0.0010	0.2377	0.0376
S(LH)	Z(HL)	I0&!I1	0.0100	0.0010	0.3410	0.0491
S(HL)	Z(HL)	!I0&I1	0.0100	0.0010	0.2544	0.0482
S(LH)	Z(LH)	!I0&I1	0.0100	0.0010	0.2008	0.0372
S(HL)	Z(LH)	I0&!I1	0.0100	0.0010	0.3120	0.0373
I0(HL)	Z(HL)	!I1&!S	0.0100	0.0010	0.3118	0.0494
I0(HL)	Z(HL)	I1&!S	0.0100	0.0010	0.3118	0.0494
I0(LH)	Z(LH)	!I1&!S	0.0100	0.0010	0.2378	0.0372
I0(LH)	Z(LH)	I1&!S	0.0100	0.0010	0.2378	0.0370

DYNAMIC ENERGY

Input Pin	When Condition	Tin (ns)	Output	Out Load (pf)	Energy (uW/MHz)
I0	!I1&!S	0.0100	Z(HL)	0.0010	0.4735
I0	I1&!S	0.0100	Z(HL)	0.0010	0.4734
S	I0&!I1	0.0100	Z(HL)	0.0010	0.4470
S	!I0&I1	0.0100	Z(HL)	0.0010	0.5776
I1	!I0&S	0.0100	Z(HL)	0.0010	0.4988
I1	I0&S	0.0100	Z(HL)	0.0010	0.4988
I0	!I1&!S	0.0100	Z(LH)	0.0010	0.2665
I0	I1&!S	0.0100	Z(LH)	0.0010	0.2665
S	!I0&I1	0.0100	Z(LH)	0.0010	0.2478
S	I0&!I1	0.0100	Z(LH)	0.0010	0.4777
I1	!I0&S	0.0100	Z(LH)	0.0010	0.2475
I1	I0&S	0.0100	Z(LH)	0.0010	0.2475
I0(HL)	!I1&S	0.0100	n/a	n/a	0.0437
I0(HL)	I1&S	0.0100	n/a	n/a	0.0394
S(HL)	!I0&!I1	0.0100	n/a	n/a	0.2025
S(HL)	I0&I1	0.0100	n/a	n/a	0.1936
I0(LH)	!I1&S	0.0100	n/a	n/a	-0.0381
I0(LH)	I1&S	0.0100	n/a	n/a	-0.0331
S(LH)	!I0&!I1	0.0100	n/a	n/a	0.0122
S(LH)	I0&I1	0.0100	n/a	n/a	0.0190
I1(LH)	!I0&!S	0.0100	n/a	n/a	-0.0385
I1(LH)	I0&!S	0.0100	n/a	n/a	-0.0333
I1(HL)	!I0&!S	0.0100	n/a	n/a	0.0436
I1(HL)	I0&!S	0.0100	n/a	n/a	0.0394

LEAKAGE POWER

When Condition	Power (nW)
!I0&!I1&!S	0.2190
!I0&!I1&S	0.2201
!I0&I1&!S	0.2192
I0&!I1&S	0.2203
!I0&I1&S	0.2160
I0&!I1&!S	0.2150
I0&I1&!S	0.2150
I0&I1&S	0.2160

gf180mcu_fd_sc_mcu7t5v0__mux2_4

gf180mcu_fd_sc_mcu7t5v0__mux2_4 symbol

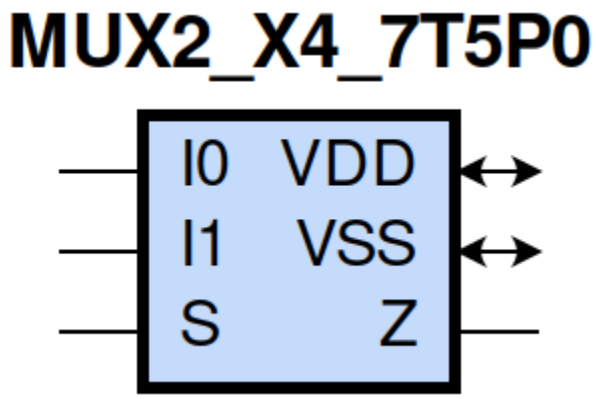

gf180mcu_fd_sc_mcu7t5v0__mux2_4 schematic

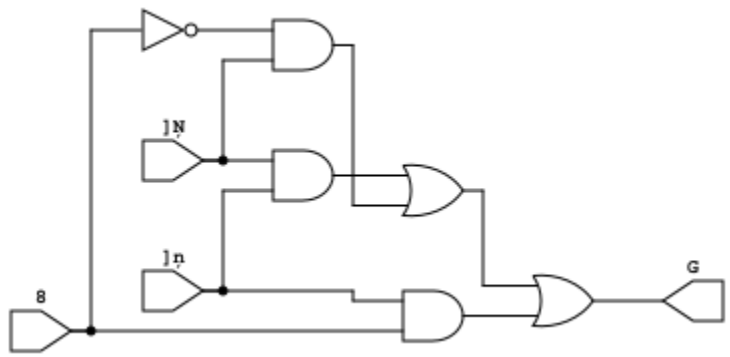

gf180mcu_fd_sc_mcu7t5v0__mux2_4 layout

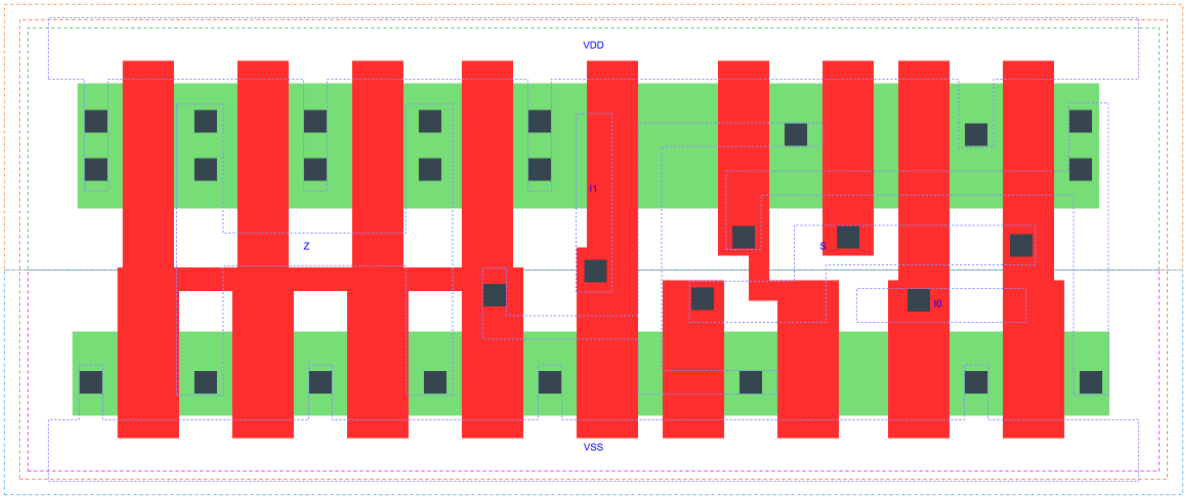

MUX2_X4 is a 2-to-1 multiplexer, 4X drive strength | | Attributes

Attribute	Value
area	41.708800 μm^2

OUTPUT FUNCTIONS

Output Pin	Function
Z	((I0&(!S))|(I1&S))

TRUTH TABLE FOR Z

I0	I1	S	Z
1	?	0	1
?	1	1	1
0	?	0	0
?	0	1	0

FUNCTIONAL SCHEMATIC

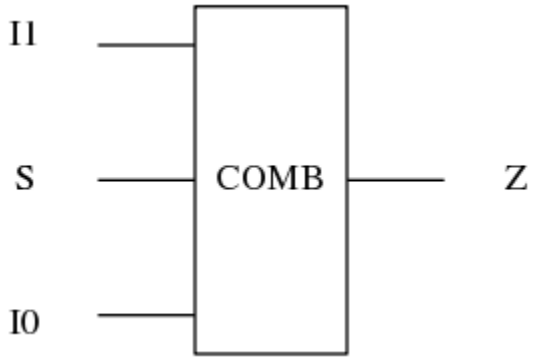

PIN CAPACITANCE (pf)

Pin	Type	Capacitance (pf)
I1	input	0.0047
S	input	0.0100
I0	input	0.0047

DELAY AND OUTPUT TRANSITION TIME corresponding to min slew and load

Input Pin	Output	When Condition	Tin (ns)	Out Load (pf)	Delay (ns)	Tout (ns)
I1(HL)	Z(HL)	!I0&S	0.0100	0.0010	0.4291	0.0664
I1(HL)	Z(HL)	I0&S	0.0100	0.0010	0.4289	0.0665
I1(LH)	Z(LH)	!I0&S	0.0100	0.0010	0.3184	0.0460
I1(LH)	Z(LH)	I0&S	0.0100	0.0010	0.3184	0.0460
S(LH)	Z(HL)	I0&!I1	0.0100	0.0010	0.4493	0.0665
S(HL)	Z(HL)	!I0&I1	0.0100	0.0010	0.3672	0.0666
S(LH)	Z(LH)	!I0&I1	0.0100	0.0010	0.2817	0.0460
S(HL)	Z(LH)	I0&!I1	0.0100	0.0010	0.3908	0.0457
I0(HL)	Z(HL)	!I1&!S	0.0100	0.0010	0.4248	0.0668
I0(HL)	Z(HL)	I1&!S	0.0100	0.0010	0.4248	0.0668
I0(LH)	Z(LH)	!I1&!S	0.0100	0.0010	0.3184	0.0459
I0(LH)	Z(LH)	I1&!S	0.0100	0.0010	0.3184	0.0459

DYNAMIC ENERGY

Input Pin	When Condition	Tin (ns)	Output	Out Load (pf)	Energy (uW/MHz)
I0	!I1&!S	0.0100	Z(HL)	0.0010	0.9762
I0	I1&!S	0.0100	Z(HL)	0.0010	0.9762
S	I0&!I1	0.0100	Z(HL)	0.0010	0.9453
S	!I0&I1	0.0100	Z(HL)	0.0010	1.0824
I1	!I0&S	0.0100	Z(HL)	0.0010	1.0002
I1	I0&S	0.0100	Z(HL)	0.0010	1.0005
I0	!I1&!S	0.0100	Z(LH)	0.0010	0.5877
I0	I1&!S	0.0100	Z(LH)	0.0010	0.5877
S	!I0&I1	0.0100	Z(LH)	0.0010	0.5714
S	I0&!I1	0.0100	Z(LH)	0.0010	0.7961
I1	!I0&S	0.0100	Z(LH)	0.0010	0.5700
I1	I0&S	0.0100	Z(LH)	0.0010	0.5700
I0(HL)	!I1&S	0.0100	n/a	n/a	0.0438
I0(HL)	I1&S	0.0100	n/a	n/a	0.0394
S(HL)	!I0&!I1	0.0100	n/a	n/a	0.2028
S(HL)	I0&I1	0.0100	n/a	n/a	0.1940
I0(LH)	!I1&S	0.0100	n/a	n/a	-0.0381
I0(LH)	I1&S	0.0100	n/a	n/a	-0.0331
S(LH)	!I0&!I1	0.0100	n/a	n/a	0.0122
S(LH)	I0&I1	0.0100	n/a	n/a	0.0190
I1(LH)	!I0&!S	0.0100	n/a	n/a	-0.0385
I1(LH)	I0&!S	0.0100	n/a	n/a	-0.0333
I1(HL)	!I0&!S	0.0100	n/a	n/a	0.0435
I1(HL)	I0&!S	0.0100	n/a	n/a	0.0393

LEAKAGE POWER

When Condition	Power (nW)
!I0&!I1&!S	0.2720
!I0&!I1&S	0.2730
!I0&I1&!S	0.2722
I0&!I1&S	0.2733
!I0&I1&S	0.2669
I0&!I1&!S	0.2659
I0&I1&!S	0.2659
I0&I1&S	0.2669

gf180mcu_fd_sc_mcu7t5v0__mux4_1

gf180mcu_fd_sc_mcu7t5v0__mux4_1 symbol

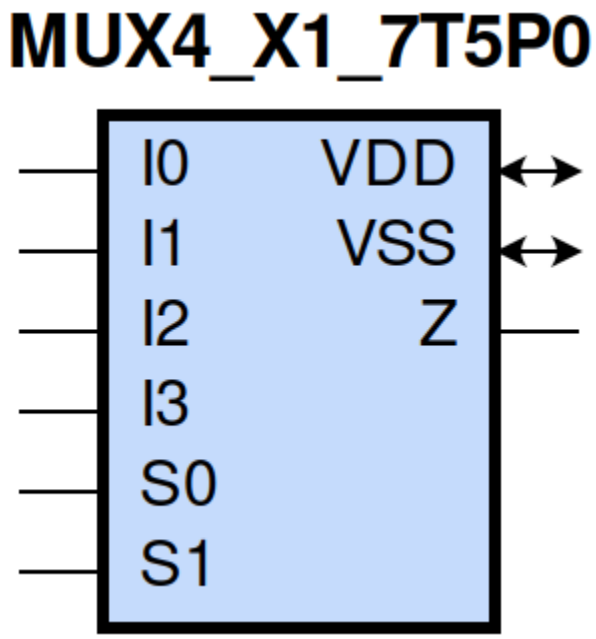

gf180mcu_fd_sc_mcu7t5v0__mux4_1 schematic

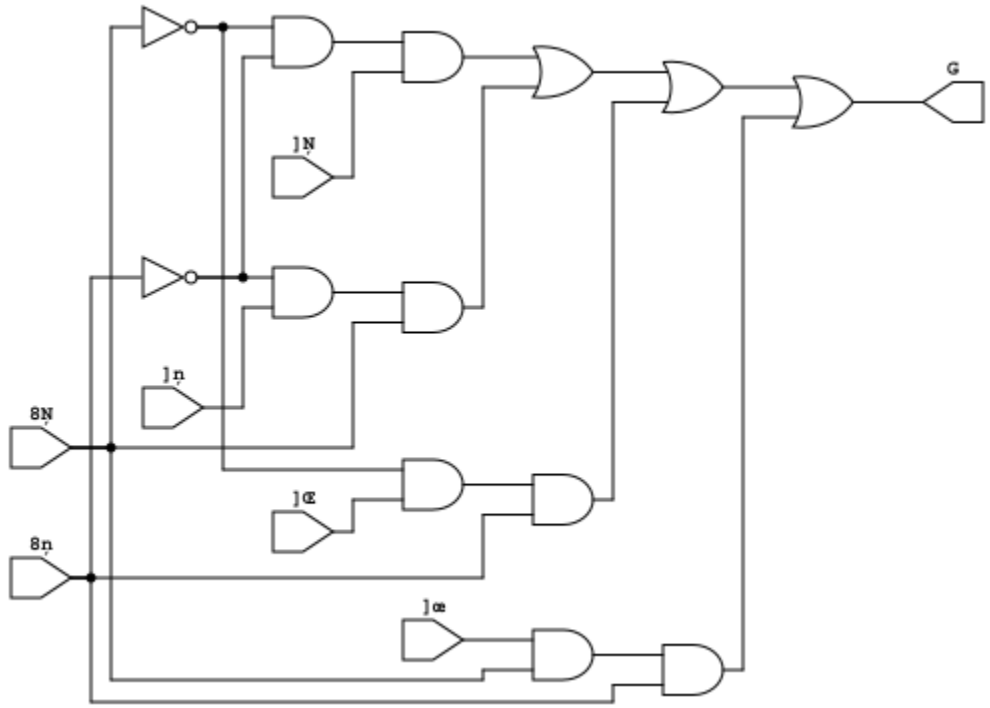

gf180mcu_fd_sc_mcu7t5v0__mux4_1 layout

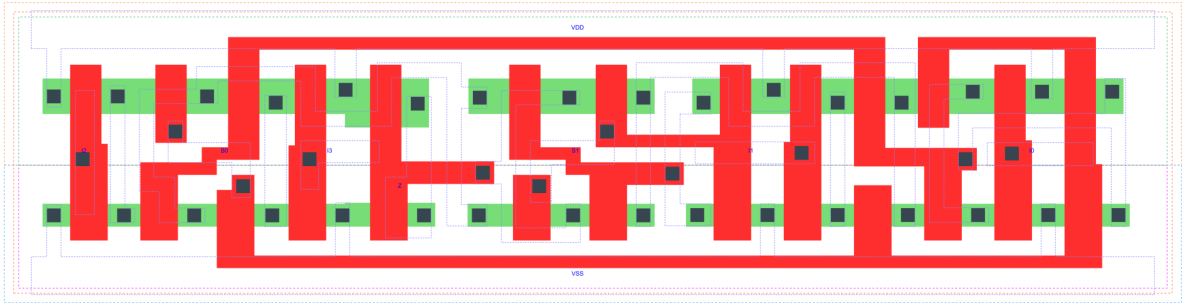

MUX4_X1 is a 4-to-1 multiplexer, 1X drive strength | | Attributes

Attribute	Value
area	70.246400 μm^2

OUTPUT FUNCTIONS

Output Pin	Function
Z	((I0&(!S0)&(!S1))|(I1&S0&(!S1))|(I2&(!S0)&S1)|(I3&S0&S1))

TRUTH TABLE FOR Z

I0	I1	I2	I3	S0	S1	Z
1	?	?	?	0	0	1
?	1	?	?	1	0	1
?	?	1	?	0	1	1
?	?	?	1	1	1	1
0	?	?	?	0	0	0
?	0	?	?	1	0	0
?	?	0	?	0	1	0
?	?	?	0	1	1	0

FUNCTIONAL SCHEMATIC

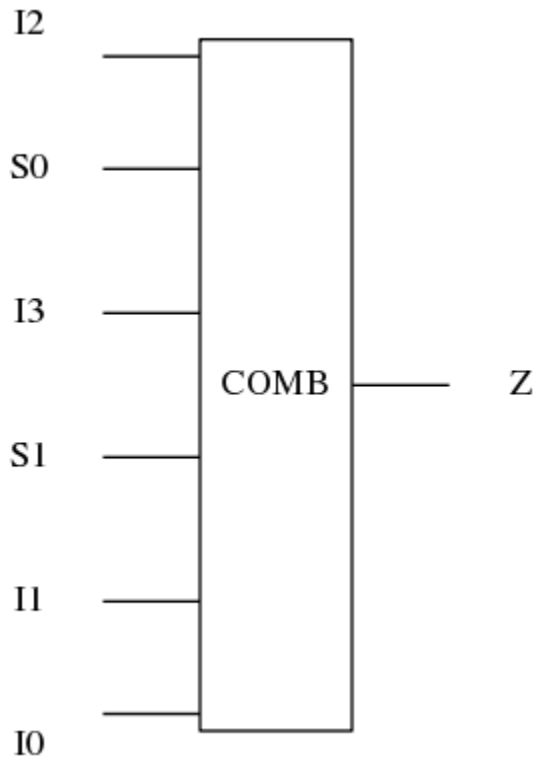

PIN CAPACITANCE (pf)

Pin	Type	Capacitance (pf)
I2	input	0.0028
S0	input	0.0100
I3	input	0.0028
S1	input	0.0055
I1	input	0.0029
I0	input	0.0028

DELAY AND OUTPUT TRANSITION TIME corresponding to min slew and load

Input Pin	Output	When Condition	Tin (ns)	Out Load (pf)	Delay (ns)	Tout (ns)
I2(HL)	Z(HL)	!I0&!I1&!I3&!S0&S1	0.0100	0.0010	0.4932	0.1021
I2(HL)	Z(HL)	!I0&!I1&I3&!S0&S1	0.0100	0.0010	0.4931	0.1025
I2(HL)	Z(HL)	!I0&I1&!I3&!S0&S1	0.0100	0.0010	0.4931	0.1020
I2(HL)	Z(HL)	!I0&I1&I3&!S0&S1	0.0100	0.0010	0.4931	0.1021
I2(HL)	Z(HL)	I0&!I1&!I3&!S0&S1	0.0100	0.0010	0.4931	0.1021

continues on next page

Table 55 – continued from previous page

I2(HL)	Z(HL)	I0&!I1&I3&!S0&S1	0.0100	0.0010	0.4932	0.1021
I2(HL)	Z(HL)	I0&I1&!I3&!S0&S1	0.0100	0.0010	0.4931	0.1025
I2(HL)	Z(HL)	I0&I1&I3&!S0&S1	0.0100	0.0010	0.4932	0.1021
I2(LH)	Z(LH)	!I0&!I1&!I3&!S0&S1	0.0100	0.0010	0.4426	0.0755
I2(LH)	Z(LH)	!I0&!I1&I3&!S0&S1	0.0100	0.0010	0.4428	0.0757
I2(LH)	Z(LH)	!I0&I1&!I3&!S0&S1	0.0100	0.0010	0.4426	0.0756
I2(LH)	Z(LH)	!I0&I1&I3&!S0&S1	0.0100	0.0010	0.4428	0.0756
I2(LH)	Z(LH)	I0&!I1&!I3&!S0&S1	0.0100	0.0010	0.4427	0.0757
I2(LH)	Z(LH)	I0&!I1&I3&!S0&S1	0.0100	0.0010	0.4428	0.0756
I2(LH)	Z(LH)	I0&I1&!I3&!S0&S1	0.0100	0.0010	0.4423	0.0758
I2(LH)	Z(LH)	I0&I1&I3&!S0&S1	0.0100	0.0010	0.4423	0.0758
S0(HL)	Z(LH)	!I0&!I1&I2&!I3&S1	0.0100	0.0010	0.5514	0.0773
S0(HL)	Z(LH)	!I0&I1&I2&!I3&S1	0.0100	0.0010	0.5398	0.0770
S0(HL)	Z(LH)	I0&!I1&!I2&!I3&!S1	0.0100	0.0010	0.5409	0.0757
S0(HL)	Z(LH)	I0&!I1&!I2&I3&!S1	0.0100	0.0010	0.5296	0.0757
S0(HL)	Z(LH)	I0&!I1&I2&!I3&!S1	0.0100	0.0010	0.5488	0.0761
S0(HL)	Z(LH)	I0&!I1&I2&!I3&S1	0.0100	0.0010	0.5590	0.0777
S0(HL)	Z(LH)	I0&!I1&I2&I3&!S1	0.0100	0.0010	0.5373	0.0761
S0(HL)	Z(LH)	I0&I1&I2&!I3&S1	0.0100	0.0010	0.5480	0.0772
S0(HL)	Z(HL)	!I0&!I1&!I2&I3&S1	0.0100	0.0010	0.5153	0.1017
S0(HL)	Z(HL)	!I0&I1&!I2&!I3&!S1	0.0100	0.0010	0.5019	0.0998
S0(HL)	Z(HL)	!I0&I1&!I2&I3&!S1	0.0100	0.0010	0.4940	0.0993
S0(HL)	Z(HL)	!I0&I1&!I2&I3&S1	0.0100	0.0010	0.5073	0.1014
S0(HL)	Z(HL)	!I0&I1&I2&!I3&!S1	0.0100	0.0010	0.5073	0.1003
S0(HL)	Z(HL)	!I0&I1&I2&I3&!S1	0.0100	0.0010	0.4998	0.0998
S0(HL)	Z(HL)	I0&!I1&!I2&I3&S1	0.0100	0.0010	0.5206	0.1026
S0(HL)	Z(HL)	I0&I1&!I2&I3&S1	0.0100	0.0010	0.5131	0.1022
S0(LH)	Z(LH)	!I0&!I1&!I2&I3&S1	0.0100	0.0010	0.4069	0.0749
S0(LH)	Z(LH)	!I0&I1&!I2&!I3&!S1	0.0100	0.0010	0.3973	0.0735
S0(LH)	Z(LH)	!I0&I1&!I2&I3&!S1	0.0100	0.0010	0.3971	0.0735
S0(LH)	Z(LH)	!I0&I1&!I2&I3&S1	0.0100	0.0010	0.4064	0.0751
S0(LH)	Z(LH)	!I0&I1&I2&!I3&!S1	0.0100	0.0010	0.3973	0.0735
S0(LH)	Z(LH)	!I0&I1&I2&I3&!S1	0.0100	0.0010	0.3973	0.0735
S0(LH)	Z(LH)	I0&!I1&!I2&I3&S1	0.0100	0.0010	0.4073	0.0750
S0(LH)	Z(LH)	I0&I1&!I2&I3&S1	0.0100	0.0010	0.4069	0.0749
S0(LH)	Z(HL)	!I0&!I1&I2&!I3&S1	0.0100	0.0010	0.4738	0.1028
S0(LH)	Z(HL)	!I0&I1&I2&!I3&S1	0.0100	0.0010	0.4693	0.1022
S0(LH)	Z(HL)	I0&!I1&!I2&!I3&!S1	0.0100	0.0010	0.4621	0.0999
S0(LH)	Z(HL)	I0&!I1&!I2&I3&!S1	0.0100	0.0010	0.4575	0.1001
S0(LH)	Z(HL)	I0&!I1&I2&!I3&!S1	0.0100	0.0010	0.4633	0.1000
S0(LH)	Z(HL)	I0&!I1&I2&!I3&S1	0.0100	0.0010	0.4756	0.1029
S0(LH)	Z(HL)	I0&!I1&I2&I3&!S1	0.0100	0.0010	0.4616	0.0998
S0(LH)	Z(HL)	I0&I1&I2&!I3&S1	0.0100	0.0010	0.4738	0.1022
I3(LH)	Z(LH)	!I0&!I1&!I2&S0&S1	0.0100	0.0010	0.4361	0.0755
I3(LH)	Z(LH)	!I0&!I1&I2&S0&S1	0.0100	0.0010	0.4364	0.0754
I3(LH)	Z(LH)	!I0&I1&!I2&S0&S1	0.0100	0.0010	0.4364	0.0755
I3(LH)	Z(LH)	!I0&I1&I2&S0&S1	0.0100	0.0010	0.4361	0.0754
I3(LH)	Z(LH)	I0&!I1&!I2&S0&S1	0.0100	0.0010	0.4361	0.0756
I3(LH)	Z(LH)	I0&!I1&I2&S0&S1	0.0100	0.0010	0.4361	0.0755
I3(LH)	Z(LH)	I0&I1&!I2&S0&S1	0.0100	0.0010	0.4361	0.0756
I3(LH)	Z(LH)	I0&I1&I2&S0&S1	0.0100	0.0010	0.4361	0.0753
I3(HL)	Z(HL)	!I0&!I1&!I2&S0&S1	0.0100	0.0010	0.4914	0.1026

continues on next page

Table 55 – continued from previous page

I3(HL)	Z(HL)	!I0&!I1&I2&S0&S1	0.0100	0.0010	0.4914	0.1026
I3(HL)	Z(HL)	!I0&I1&!I2&S0&S1	0.0100	0.0010	0.4914	0.1026
I3(HL)	Z(HL)	!I0&I1&I2&S0&S1	0.0100	0.0010	0.4914	0.1025
I3(HL)	Z(HL)	I0&!I1&!I2&S0&S1	0.0100	0.0010	0.4914	0.1026
I3(HL)	Z(HL)	I0&!I1&I2&S0&S1	0.0100	0.0010	0.4914	0.1026
I3(HL)	Z(HL)	I0&I1&!I2&S0&S1	0.0100	0.0010	0.4914	0.1026
I3(HL)	Z(HL)	I0&I1&I2&S0&S1	0.0100	0.0010	0.4914	0.1025
S1(LH)	Z(HL)	!I0&I1&!I2&!I3&S0	0.0100	0.0010	0.2595	0.0809
S1(LH)	Z(HL)	!I0&I1&I2&!I3&S0	0.0100	0.0010	0.2595	0.0810
S1(LH)	Z(HL)	I0&!I1&!I2&!I3&!S0	0.0100	0.0010	0.2597	0.0810
S1(LH)	Z(HL)	I0&!I1&!I2&I3&!S0	0.0100	0.0010	0.2597	0.0811
S1(LH)	Z(HL)	I0&I1&!I2&!I3&!S0	0.0100	0.0010	0.2597	0.0811
S1(LH)	Z(HL)	I0&I1&!I2&!I3&S0	0.0100	0.0010	0.2595	0.0810
S1(LH)	Z(HL)	I0&I1&!I2&I3&!S0	0.0100	0.0010	0.2596	0.0811
S1(LH)	Z(HL)	I0&I1&I2&!I3&S0	0.0100	0.0010	0.2595	0.0810
S1(LH)	Z(LH)	!I0&!I1&!I2&I3&S0	0.0100	0.0010	0.2269	0.0692
S1(LH)	Z(LH)	!I0&!I1&I2&!I3&!S0	0.0100	0.0010	0.2265	0.0690
S1(LH)	Z(LH)	!I0&!I1&I2&I3&!S0	0.0100	0.0010	0.2265	0.0690
S1(LH)	Z(LH)	!I0&!I1&I2&I3&S0	0.0100	0.0010	0.2269	0.0691
S1(LH)	Z(LH)	!I0&I1&I2&!I3&!S0	0.0100	0.0010	0.2265	0.0690
S1(LH)	Z(LH)	!I0&I1&I2&I3&!S0	0.0100	0.0010	0.2265	0.0690
S1(LH)	Z(LH)	I0&!I1&!I2&I3&S0	0.0100	0.0010	0.2269	0.0692
S1(LH)	Z(LH)	I0&!I1&I2&I3&S0	0.0100	0.0010	0.2269	0.0691
S1(HL)	Z(HL)	!I0&!I1&!I2&I3&S0	0.0100	0.0010	0.2761	0.0746
S1(HL)	Z(HL)	!I0&!I1&I2&!I3&!S0	0.0100	0.0010	0.2756	0.0744
S1(HL)	Z(HL)	!I0&!I1&I2&I3&!S0	0.0100	0.0010	0.2756	0.0744
S1(HL)	Z(HL)	!I0&!I1&I2&I3&S0	0.0100	0.0010	0.2761	0.0746
S1(HL)	Z(HL)	!I0&I1&I2&!I3&!S0	0.0100	0.0010	0.2756	0.0744
S1(HL)	Z(HL)	!I0&I1&I2&I3&!S0	0.0100	0.0010	0.2756	0.0744
S1(HL)	Z(HL)	I0&!I1&!I2&I3&S0	0.0100	0.0010	0.2761	0.0746
S1(HL)	Z(HL)	I0&!I1&I2&I3&S0	0.0100	0.0010	0.2761	0.0746
S1(HL)	Z(LH)	!I0&I1&!I2&!I3&S0	0.0100	0.0010	0.3226	0.0697
S1(HL)	Z(LH)	!I0&I1&I2&!I3&S0	0.0100	0.0010	0.3226	0.0697
S1(HL)	Z(LH)	I0&!I1&!I2&!I3&!S0	0.0100	0.0010	0.3222	0.0693
S1(HL)	Z(LH)	I0&!I1&!I2&I3&!S0	0.0100	0.0010	0.3222	0.0696
S1(HL)	Z(LH)	I0&I1&!I2&!I3&!S0	0.0100	0.0010	0.3222	0.0696
S1(HL)	Z(LH)	I0&I1&!I2&!I3&S0	0.0100	0.0010	0.3226	0.0697
S1(HL)	Z(LH)	I0&I1&!I2&I3&!S0	0.0100	0.0010	0.3223	0.0696
S1(HL)	Z(LH)	I0&I1&I2&!I3&S0	0.0100	0.0010	0.3226	0.0697
I1(LH)	Z(LH)	!I0&!I2&!I3&S0&!S1	0.0100	0.0010	0.4235	0.0739
I1(LH)	Z(LH)	!I0&!I2&I3&S0&!S1	0.0100	0.0010	0.4235	0.0739
I1(LH)	Z(LH)	!I0&I2&!I3&S0&!S1	0.0100	0.0010	0.4232	0.0741
I1(LH)	Z(LH)	!I0&I2&I3&S0&!S1	0.0100	0.0010	0.4232	0.0741
I1(LH)	Z(LH)	I0&!I2&!I3&S0&!S1	0.0100	0.0010	0.4235	0.0739
I1(LH)	Z(LH)	I0&!I2&I3&S0&!S1	0.0100	0.0010	0.4232	0.0741
I1(LH)	Z(LH)	I0&I2&!I3&S0&!S1	0.0100	0.0010	0.4232	0.0741
I1(LH)	Z(LH)	I0&I2&I3&S0&!S1	0.0100	0.0010	0.4233	0.0741
I1(HL)	Z(HL)	!I0&!I2&!I3&S0&!S1	0.0100	0.0010	0.4735	0.0997
I1(HL)	Z(HL)	!I0&!I2&I3&S0&!S1	0.0100	0.0010	0.4735	0.0997
I1(HL)	Z(HL)	!I0&I2&!I3&S0&!S1	0.0100	0.0010	0.4735	0.0997
I1(HL)	Z(HL)	!I0&I2&I3&S0&!S1	0.0100	0.0010	0.4735	0.0997
I1(HL)	Z(HL)	I0&!I2&!I3&S0&!S1	0.0100	0.0010	0.4735	0.0997

continues on next page

Table 55 – continued from previous page

I1(HL)	Z(HL)	I0&!I2&I3&S0&!S1	0.0100	0.0010	0.4735	0.0997
I1(HL)	Z(HL)	I0&I2&!I3&S0&!S1	0.0100	0.0010	0.4735	0.0997
I1(HL)	Z(HL)	I0&I2&I3&S0&!S1	0.0100	0.0010	0.4735	0.0997
I0(LH)	Z(LH)	!I1&!I2&!I3&!S0&!S1	0.0100	0.0010	0.4328	0.0741
I0(LH)	Z(LH)	!I1&!I2&I3&!S0&!S1	0.0100	0.0010	0.4328	0.0741
I0(LH)	Z(LH)	!I1&I2&!I3&!S0&!S1	0.0100	0.0010	0.4328	0.0742
I0(LH)	Z(LH)	!I1&I2&I3&!S0&!S1	0.0100	0.0010	0.4325	0.0743
I0(LH)	Z(LH)	I1&!I2&!I3&!S0&!S1	0.0100	0.0010	0.4328	0.0741
I0(LH)	Z(LH)	I1&!I2&I3&!S0&!S1	0.0100	0.0010	0.4325	0.0744
I0(LH)	Z(LH)	I1&I2&!I3&!S0&!S1	0.0100	0.0010	0.4325	0.0744
I0(LH)	Z(LH)	I1&I2&I3&!S0&!S1	0.0100	0.0010	0.4326	0.0745
I0(HL)	Z(HL)	!I1&!I2&!I3&!S0&!S1	0.0100	0.0010	0.4804	0.1001
I0(HL)	Z(HL)	!I1&!I2&I3&!S0&!S1	0.0100	0.0010	0.4804	0.1001
I0(HL)	Z(HL)	!I1&I2&!I3&!S0&!S1	0.0100	0.0010	0.4804	0.1000
I0(HL)	Z(HL)	!I1&I2&I3&!S0&!S1	0.0100	0.0010	0.4804	0.1001
I0(HL)	Z(HL)	I1&!I2&!I3&!S0&!S1	0.0100	0.0010	0.4804	0.1001
I0(HL)	Z(HL)	I1&!I2&I3&!S0&!S1	0.0100	0.0010	0.4804	0.1001
I0(HL)	Z(HL)	I1&I2&!I3&!S0&!S1	0.0100	0.0010	0.4804	0.1001
I0(HL)	Z(HL)	I1&I2&I3&!S0&!S1	0.0100	0.0010	0.4804	0.1001

DYNAMIC ENERGY

Input Pin	When Condition	Tin (ns)	Output	Out Load (pf)	Energy (uW/MHz)
S1	!I0&I1&!I2&!I3&S0	0.0100	Z(HL)	0.0010	0.1964
S1	!I0&I1&I2&!I3&S0	0.0100	Z(HL)	0.0010	0.1964
S1	I0&!I1&!I2&!I3&!S0	0.0100	Z(HL)	0.0010	0.1966
S1	I0&!I1&!I2&I3&!S0	0.0100	Z(HL)	0.0010	0.1966
S1	I0&I1&!I2&!I3&!S0	0.0100	Z(HL)	0.0010	0.1966
S1	I0&I1&!I2&!I3&S0	0.0100	Z(HL)	0.0010	0.1964
S1	I0&I1&!I2&I3&!S0	0.0100	Z(HL)	0.0010	0.1966
S1	I0&I1&I2&!I3&S0	0.0100	Z(HL)	0.0010	0.1964
S1	!I0&!I1&!I2&I3&S0	0.0100	Z(HL)	0.0010	0.2628
S1	!I0&!I1&I2&!I3&!S0	0.0100	Z(HL)	0.0010	0.2627
S1	!I0&!I1&I2&I3&!S0	0.0100	Z(HL)	0.0010	0.2627
S1	!I0&!I1&I2&I3&S0	0.0100	Z(HL)	0.0010	0.2628
S1	!I0&I1&I2&!I3&!S0	0.0100	Z(HL)	0.0010	0.2626
S1	!I0&I1&I2&I3&!S0	0.0100	Z(HL)	0.0010	0.2626
S1	I0&!I1&!I2&I3&S0	0.0100	Z(HL)	0.0010	0.2628
S1	I0&!I1&I2&I3&S0	0.0100	Z(HL)	0.0010	0.2628
S1	!I0&!I1&!I2&I3&S0	0.0100	Z(LH)	0.0010	0.1003
S1	!I0&!I1&I2&!I3&!S0	0.0100	Z(LH)	0.0010	0.1002
S1	!I0&!I1&I2&I3&!S0	0.0100	Z(LH)	0.0010	0.1002
S1	!I0&!I1&I2&I3&S0	0.0100	Z(LH)	0.0010	0.1002
S1	!I0&I1&I2&!I3&!S0	0.0100	Z(LH)	0.0010	0.1002
S1	!I0&I1&I2&I3&!S0	0.0100	Z(LH)	0.0010	0.1002
S1	I0&!I1&!I2&I3&S0	0.0100	Z(LH)	0.0010	0.1002
S1	I0&!I1&I2&I3&S0	0.0100	Z(LH)	0.0010	0.1002

continues on next page

Table 56 – continued from previous page

S1	!I0&I1&!I2&!I3&S0	0.0100	Z(LH)	0.0010	0.2442
S1	!I0&I1&I2&!I3&S0	0.0100	Z(LH)	0.0010	0.2442
S1	I0&!I1&!I2&!I3&!S0	0.0100	Z(LH)	0.0010	0.2444
S1	I0&!I1&!I2&I3&!S0	0.0100	Z(LH)	0.0010	0.2442
S1	I0&I1&!I2&!I3&!S0	0.0100	Z(LH)	0.0010	0.2442
S1	I0&I1&!I2&!I3&S0	0.0100	Z(LH)	0.0010	0.2442
S1	I0&I1&!I2&I3&!S0	0.0100	Z(LH)	0.0010	0.2444
S1	I0&I1&I2&!I3&S0	0.0100	Z(LH)	0.0010	0.2442
I0	!I1&!I2&!I3&!S0&!S1	0.0100	Z(LH)	0.0010	0.1798
I0	!I1&!I2&I3&!S0&!S1	0.0100	Z(LH)	0.0010	0.1798
I0	!I1&I2&!I3&!S0&!S1	0.0100	Z(LH)	0.0010	0.1798
I0	!I1&I2&I3&!S0&!S1	0.0100	Z(LH)	0.0010	0.1795
I0	I1&!I2&!I3&!S0&!S1	0.0100	Z(LH)	0.0010	0.1798
I0	I1&!I2&I3&!S0&!S1	0.0100	Z(LH)	0.0010	0.1795
I0	I1&I2&!I3&!S0&!S1	0.0100	Z(LH)	0.0010	0.1795
I0	I1&I2&I3&!S0&!S1	0.0100	Z(LH)	0.0010	0.1795
I3	!I0&!I1&!I2&S0&S1	0.0100	Z(LH)	0.0010	0.1551
I3	!I0&!I1&I2&S0&S1	0.0100	Z(LH)	0.0010	0.1553
I3	!I0&I1&!I2&S0&S1	0.0100	Z(LH)	0.0010	0.1553
I3	!I0&I1&I2&S0&S1	0.0100	Z(LH)	0.0010	0.1551
I3	I0&!I1&!I2&S0&S1	0.0100	Z(LH)	0.0010	0.1551
I3	I0&!I1&I2&S0&S1	0.0100	Z(LH)	0.0010	0.1551
I3	I0&I1&!I2&S0&S1	0.0100	Z(LH)	0.0010	0.1551
I3	I0&I1&I2&S0&S1	0.0100	Z(LH)	0.0010	0.1551
I2	!I0&!I1&!I3&!S0&S1	0.0100	Z(HL)	0.0010	0.3846
I2	!I0&!I1&I3&!S0&S1	0.0100	Z(HL)	0.0010	0.3847
I2	!I0&I1&!I3&!S0&S1	0.0100	Z(HL)	0.0010	0.3846
I2	!I0&I1&I3&!S0&S1	0.0100	Z(HL)	0.0010	0.3846
I2	I0&!I1&!I3&!S0&S1	0.0100	Z(HL)	0.0010	0.3846
I2	I0&!I1&I3&!S0&S1	0.0100	Z(HL)	0.0010	0.3846
I2	I0&I1&!I3&!S0&S1	0.0100	Z(HL)	0.0010	0.3847
I2	I0&I1&I3&!S0&S1	0.0100	Z(HL)	0.0010	0.3846
I1	!I0&!I2&!I3&S0&!S1	0.0100	Z(LH)	0.0010	0.1618
I1	!I0&!I2&I3&S0&!S1	0.0100	Z(LH)	0.0010	0.1618
I1	!I0&I2&!I3&S0&!S1	0.0100	Z(LH)	0.0010	0.1618
I1	!I0&I2&I3&S0&!S1	0.0100	Z(LH)	0.0010	0.1617
I1	I0&!I2&!I3&S0&!S1	0.0100	Z(LH)	0.0010	0.1619
I1	I0&!I2&I3&S0&!S1	0.0100	Z(LH)	0.0010	0.1618
I1	I0&I2&!I3&S0&!S1	0.0100	Z(LH)	0.0010	0.1618
I1	I0&I2&I3&S0&!S1	0.0100	Z(LH)	0.0010	0.1617
I3	!I0&!I1&!I2&S0&S1	0.0100	Z(HL)	0.0010	0.3990
I3	!I0&!I1&I2&S0&S1	0.0100	Z(HL)	0.0010	0.3990
I3	!I0&I1&!I2&S0&S1	0.0100	Z(HL)	0.0010	0.3990
I3	!I0&I1&I2&S0&S1	0.0100	Z(HL)	0.0010	0.3990
I3	I0&!I1&!I2&S0&S1	0.0100	Z(HL)	0.0010	0.3990
I3	I0&!I1&I2&S0&S1	0.0100	Z(HL)	0.0010	0.3990
I3	I0&I1&!I2&S0&S1	0.0100	Z(HL)	0.0010	0.3990
I3	I0&I1&I2&S0&S1	0.0100	Z(HL)	0.0010	0.3990
I0	!I1&!I2&!I3&!S0&!S1	0.0100	Z(HL)	0.0010	0.3622
I0	!I1&!I2&I3&!S0&!S1	0.0100	Z(HL)	0.0010	0.3622
I0	!I1&I2&!I3&!S0&!S1	0.0100	Z(HL)	0.0010	0.3622
I0	!I1&I2&I3&!S0&!S1	0.0100	Z(HL)	0.0010	0.3622

continues on next page

Table 56 – continued from previous page

I0	I1&!I2&!I3&!S0&!S1	0.0100	Z(HL)	0.0010	0.3622
I0	I1&!I2&I3&!S0&!S1	0.0100	Z(HL)	0.0010	0.3622
I0	I1&I2&!I3&!S0&!S1	0.0100	Z(HL)	0.0010	0.3622
I0	I1&I2&I3&!S0&!S1	0.0100	Z(HL)	0.0010	0.3622
S0	!I0&!I1&I2&!I3&S1	0.0100	Z(LH)	0.0010	0.3957
S0	!I0&I1&I2&!I3&S1	0.0100	Z(LH)	0.0010	0.4967
S0	I0&!I1&!I2&!I3&!S1	0.0100	Z(LH)	0.0010	0.4031
S0	I0&!I1&!I2&I3&!S1	0.0100	Z(LH)	0.0010	0.5115
S0	I0&!I1&I2&!I3&!S1	0.0100	Z(LH)	0.0010	0.4793
S0	I0&!I1&I2&!I3&S1	0.0100	Z(LH)	0.0010	0.4647
S0	I0&!I1&I2&I3&!S1	0.0100	Z(LH)	0.0010	0.4000
S0	I0&I1&I2&!I3&S1	0.0100	Z(LH)	0.0010	0.3927
S0	!I0&!I1&!I2&I3&S1	0.0100	Z(LH)	0.0010	0.1456
S0	!I0&I1&!I2&!I3&!S1	0.0100	Z(LH)	0.0010	0.1528
S0	!I0&I1&!I2&I3&!S1	0.0100	Z(LH)	0.0010	0.1814
S0	!I0&I1&!I2&I3&S1	0.0100	Z(LH)	0.0010	0.1668
S0	!I0&I1&I2&!I3&!S1	0.0100	Z(LH)	0.0010	0.3205
S0	!I0&I1&I2&I3&!S1	0.0100	Z(LH)	0.0010	0.1529
S0	I0&!I1&!I2&I3&S1	0.0100	Z(LH)	0.0010	0.3057
S0	I0&I1&!I2&I3&S1	0.0100	Z(LH)	0.0010	0.1457
I2	!I0&!I1&!I3&!S0&S1	0.0100	Z(LH)	0.0010	0.1744
I2	!I0&!I1&I3&!S0&S1	0.0100	Z(LH)	0.0010	0.1745
I2	!I0&I1&!I3&!S0&S1	0.0100	Z(LH)	0.0010	0.1745
I2	!I0&I1&I3&!S0&S1	0.0100	Z(LH)	0.0010	0.1745
I2	I0&!I1&!I3&!S0&S1	0.0100	Z(LH)	0.0010	0.1744
I2	I0&!I1&I3&!S0&S1	0.0100	Z(LH)	0.0010	0.1745
I2	I0&I1&!I3&!S0&S1	0.0100	Z(LH)	0.0010	0.1743
I2	I0&I1&I3&!S0&S1	0.0100	Z(LH)	0.0010	0.1742
S0	!I0&!I1&!I2&I3&S1	0.0100	Z(HL)	0.0010	0.5232
S0	!I0&I1&!I2&!I3&!S1	0.0100	Z(HL)	0.0010	0.4969
S0	!I0&I1&!I2&I3&!S1	0.0100	Z(HL)	0.0010	0.6071
S0	!I0&I1&!I2&I3&S1	0.0100	Z(HL)	0.0010	0.6263
S0	!I0&I1&I2&!I3&!S1	0.0100	Z(HL)	0.0010	0.5687
S0	!I0&I1&I2&I3&!S1	0.0100	Z(HL)	0.0010	0.4945
S0	I0&!I1&!I2&I3&S1	0.0100	Z(HL)	0.0010	0.5879
S0	I0&I1&!I2&I3&S1	0.0100	Z(HL)	0.0010	0.5210
S0	!I0&!I1&I2&!I3&S1	0.0100	Z(HL)	0.0010	0.3729
S0	!I0&I1&I2&!I3&S1	0.0100	Z(HL)	0.0010	0.3912
S0	I0&!I1&!I2&!I3&!S1	0.0100	Z(HL)	0.0010	0.3458
S0	I0&!I1&!I2&I3&!S1	0.0100	Z(HL)	0.0010	0.3715
S0	I0&!I1&I2&!I3&!S1	0.0100	Z(HL)	0.0010	0.5172
S0	I0&!I1&I2&!I3&S1	0.0100	Z(HL)	0.0010	0.5370
S0	I0&!I1&I2&I3&!S1	0.0100	Z(HL)	0.0010	0.3456
S0	I0&I1&I2&!I3&S1	0.0100	Z(HL)	0.0010	0.3730
I1	!I0&!I2&!I3&S0&!S1	0.0100	Z(HL)	0.0010	0.3692
I1	!I0&!I2&I3&S0&!S1	0.0100	Z(HL)	0.0010	0.3692
I1	!I0&I2&!I3&S0&!S1	0.0100	Z(HL)	0.0010	0.3692
I1	!I0&I2&I3&S0&!S1	0.0100	Z(HL)	0.0010	0.3693
I1	I0&!I2&!I3&S0&!S1	0.0100	Z(HL)	0.0010	0.3692
I1	I0&!I2&I3&S0&!S1	0.0100	Z(HL)	0.0010	0.3692
I1	I0&I2&!I3&S0&!S1	0.0100	Z(HL)	0.0010	0.3692
I1	I0&I2&I3&S0&!S1	0.0100	Z(HL)	0.0010	0.3693

continues on next page

Table 56 – continued from previous page

I3(HL)	!I0&!I1&!I2&!S0&!S1	0.0100	n/a	n/a	0.0597
I3(HL)	!I0&!I1&!I2&!S0&S1	0.0100	n/a	n/a	0.0597
I3(HL)	!I0&!I1&!I2&S0&!S1	0.0100	n/a	n/a	0.1928
I3(HL)	!I0&!I1&I2&!S0&!S1	0.0100	n/a	n/a	0.0596
I3(HL)	!I0&!I1&I2&S0&!S1	0.0100	n/a	n/a	0.1928
I3(HL)	!I0&I1&!I2&!S0&!S1	0.0100	n/a	n/a	0.0596
I3(HL)	!I0&I1&!I2&!S0&S1	0.0100	n/a	n/a	0.0597
I3(HL)	!I0&I1&I2&!S0&!S1	0.0100	n/a	n/a	0.0597
I3(HL)	I0&!I1&!I2&!S0&S1	0.0100	n/a	n/a	0.0597
I3(HL)	I0&!I1&!I2&S0&!S1	0.0100	n/a	n/a	0.1928
I3(HL)	I0&!I1&I2&S0&!S1	0.0100	n/a	n/a	0.1928
I3(HL)	I0&I1&!I2&!S0&S1	0.0100	n/a	n/a	0.0597
I3(HL)	!I0&!I1&I2&!S0&S1	0.0100	n/a	n/a	0.0597
I3(HL)	!I0&I1&!I2&S0&!S1	0.0100	n/a	n/a	0.1929
I3(HL)	!I0&I1&I2&!S0&S1	0.0100	n/a	n/a	0.0597
I3(HL)	!I0&I1&I2&S0&!S1	0.0100	n/a	n/a	0.1928
I3(HL)	I0&!I1&!I2&!S0&!S1	0.0100	n/a	n/a	0.0596
I3(HL)	I0&!I1&I2&!S0&!S1	0.0100	n/a	n/a	0.0597
I3(HL)	I0&!I1&I2&!S0&S1	0.0100	n/a	n/a	0.0597
I3(HL)	I0&I1&!I2&!S0&!S1	0.0100	n/a	n/a	0.0596
I3(HL)	I0&I1&!I2&S0&!S1	0.0100	n/a	n/a	0.1929
I3(HL)	I0&I1&I2&!S0&!S1	0.0100	n/a	n/a	0.0597
I3(HL)	I0&I1&I2&!S0&S1	0.0100	n/a	n/a	0.0597
I3(HL)	I0&I1&I2&S0&!S1	0.0100	n/a	n/a	0.1928
I2(LH)	!I0&!I1&!I3&!S0&!S1	0.0100	n/a	n/a	0.0579
I2(LH)	!I0&!I1&!I3&S0&!S1	0.0100	n/a	n/a	0.0083
I2(LH)	!I0&!I1&!I3&S0&S1	0.0100	n/a	n/a	0.0083
I2(LH)	!I0&!I1&I3&!S0&!S1	0.0100	n/a	n/a	0.0579
I2(LH)	!I0&!I1&I3&S0&!S1	0.0100	n/a	n/a	0.0083
I2(LH)	!I0&I1&!I3&!S0&!S1	0.0100	n/a	n/a	0.0579
I2(LH)	!I0&I1&!I3&S0&S1	0.0100	n/a	n/a	0.0082
I2(LH)	!I0&I1&I3&!S0&!S1	0.0100	n/a	n/a	0.0579
I2(LH)	I0&!I1&!I3&S0&!S1	0.0100	n/a	n/a	0.0083
I2(LH)	I0&!I1&!I3&S0&S1	0.0100	n/a	n/a	0.0083
I2(LH)	I0&!I1&I3&S0&!S1	0.0100	n/a	n/a	0.0083
I2(LH)	I0&I1&!I3&S0&S1	0.0100	n/a	n/a	0.0083
I2(LH)	!I0&!I1&I3&S0&S1	0.0100	n/a	n/a	0.0083
I2(LH)	!I0&I1&!I3&S0&!S1	0.0100	n/a	n/a	0.0083
I2(LH)	!I0&I1&I3&S0&!S1	0.0100	n/a	n/a	0.0083
I2(LH)	!I0&I1&I3&S0&S1	0.0100	n/a	n/a	0.0083
I2(LH)	I0&!I1&!I3&!S0&!S1	0.0100	n/a	n/a	0.0579
I2(LH)	I0&!I1&I3&!S0&!S1	0.0100	n/a	n/a	0.0579
I2(LH)	I0&!I1&I3&S0&S1	0.0100	n/a	n/a	0.0083
I2(LH)	I0&I1&!I3&!S0&!S1	0.0100	n/a	n/a	0.0579
I2(LH)	I0&I1&!I3&S0&!S1	0.0100	n/a	n/a	0.0084
I2(LH)	I0&I1&I3&!S0&!S1	0.0100	n/a	n/a	0.0579
I2(LH)	I0&I1&I3&S0&!S1	0.0100	n/a	n/a	0.0083
I2(LH)	I0&I1&I3&S0&S1	0.0100	n/a	n/a	0.0084
I1(LH)	!I0&!I2&!I3&!S0&!S1	0.0100	n/a	n/a	0.0052
I1(LH)	!I0&!I2&!I3&!S0&S1	0.0100	n/a	n/a	0.0052
I1(LH)	!I0&!I2&!I3&S0&S1	0.0100	n/a	n/a	0.0310
I1(LH)	!I0&!I2&I3&!S0&!S1	0.0100	n/a	n/a	0.0052

continues on next page

Table 56 – continued from previous page

I1(LH)	!I0&!I2&I3&!S0&S1	0.0100	n/a	n/a	0.0052
I1(LH)	!I0&I2&!I3&!S0&!S1	0.0100	n/a	n/a	0.0052
I1(LH)	!I0&I2&!I3&S0&S1	0.0100	n/a	n/a	0.0310
I1(LH)	!I0&I2&I3&!S0&!S1	0.0100	n/a	n/a	0.0052
I1(LH)	I0&!I2&!I3&!S0&S1	0.0100	n/a	n/a	0.0052
I1(LH)	I0&!I2&!I3&S0&S1	0.0100	n/a	n/a	0.0310
I1(LH)	I0&!I2&I3&!S0&S1	0.0100	n/a	n/a	0.0052
I1(LH)	I0&I2&!I3&S0&S1	0.0100	n/a	n/a	0.0310
I1(LH)	!I0&!I2&I3&S0&S1	0.0100	n/a	n/a	0.0310
I1(LH)	!I0&I2&!I3&!S0&S1	0.0100	n/a	n/a	0.0052
I1(LH)	!I0&I2&I3&!S0&S1	0.0100	n/a	n/a	0.0052
I1(LH)	!I0&I2&I3&S0&S1	0.0100	n/a	n/a	0.0310
I1(LH)	I0&!I2&!I3&!S0&!S1	0.0100	n/a	n/a	0.0052
I1(LH)	I0&!I2&I3&!S0&!S1	0.0100	n/a	n/a	0.0052
I1(LH)	I0&!I2&I3&S0&S1	0.0100	n/a	n/a	0.0310
I1(LH)	I0&I2&!I3&!S0&!S1	0.0100	n/a	n/a	0.0052
I1(LH)	I0&I2&!I3&!S0&S1	0.0100	n/a	n/a	0.0052
I1(LH)	I0&I2&I3&!S0&!S1	0.0100	n/a	n/a	0.0051
I1(LH)	I0&I2&I3&!S0&S1	0.0100	n/a	n/a	0.0052
I1(LH)	I0&I2&I3&S0&S1	0.0100	n/a	n/a	0.0310
S0(HL)	!I0&!I1&!I2&!I3&!S1	0.0100	n/a	n/a	0.2052
S0(HL)	!I0&!I1&!I2&!I3&S1	0.0100	n/a	n/a	0.2052
S0(HL)	!I0&!I1&!I2&I3&!S1	0.0100	n/a	n/a	0.3166
S0(HL)	!I0&!I1&I2&!I3&!S1	0.0100	n/a	n/a	0.2782
S0(HL)	!I0&!I1&I2&I3&!S1	0.0100	n/a	n/a	0.2030
S0(HL)	!I0&I1&!I2&!I3&S1	0.0100	n/a	n/a	0.3092
S0(HL)	I0&!I1&!I2&!I3&S1	0.0100	n/a	n/a	0.2709
S0(HL)	I0&I1&!I2&!I3&S1	0.0100	n/a	n/a	0.2030
S0(HL)	!I0&!I1&I2&I3&S1	0.0100	n/a	n/a	0.2030
S0(HL)	!I0&I1&I2&I3&S1	0.0100	n/a	n/a	0.3072
S0(HL)	I0&!I1&I2&I3&S1	0.0100	n/a	n/a	0.2680
S0(HL)	I0&I1&!I2&!I3&!S1	0.0100	n/a	n/a	0.2030
S0(HL)	I0&I1&!I2&I3&!S1	0.0100	n/a	n/a	0.3145
S0(HL)	I0&I1&I2&!I3&!S1	0.0100	n/a	n/a	0.2753
S0(HL)	I0&I1&I2&I3&!S1	0.0100	n/a	n/a	0.2010
S0(HL)	I0&I1&I2&I3&S1	0.0100	n/a	n/a	0.2010
I1(HL)	!I0&!I2&!I3&!S0&!S1	0.0100	n/a	n/a	0.0568
I1(HL)	!I0&!I2&!I3&!S0&S1	0.0100	n/a	n/a	0.0568
I1(HL)	!I0&!I2&!I3&S0&S1	0.0100	n/a	n/a	0.1828
I1(HL)	!I0&!I2&I3&!S0&!S1	0.0100	n/a	n/a	0.0567
I1(HL)	!I0&!I2&I3&!S0&S1	0.0100	n/a	n/a	0.0568
I1(HL)	!I0&I2&!I3&!S0&!S1	0.0100	n/a	n/a	0.0568
I1(HL)	!I0&I2&!I3&S0&S1	0.0100	n/a	n/a	0.1828
I1(HL)	!I0&I2&I3&!S0&!S1	0.0100	n/a	n/a	0.0568
I1(HL)	I0&!I2&!I3&!S0&S1	0.0100	n/a	n/a	0.0568
I1(HL)	I0&!I2&!I3&S0&S1	0.0100	n/a	n/a	0.1828
I1(HL)	I0&!I2&I3&!S0&S1	0.0100	n/a	n/a	0.0568
I1(HL)	I0&I2&!I3&S0&S1	0.0100	n/a	n/a	0.1828
I1(HL)	!I0&!I2&I3&S0&S1	0.0100	n/a	n/a	0.1828
I1(HL)	!I0&I2&!I3&!S0&S1	0.0100	n/a	n/a	0.0568
I1(HL)	!I0&I2&I3&!S0&S1	0.0100	n/a	n/a	0.0568
I1(HL)	!I0&I2&I3&S0&S1	0.0100	n/a	n/a	0.1828

continues on next page

Table 56 – continued from previous page

I1(HL)	I0&!I2&!I3&!S0&!S1	0.0100	n/a	n/a	0.0568
I1(HL)	I0&!I2&I3&!S0&!S1	0.0100	n/a	n/a	0.0568
I1(HL)	I0&!I2&I3&S0&S1	0.0100	n/a	n/a	0.1828
I1(HL)	I0&I2&!I3&!S0&!S1	0.0100	n/a	n/a	0.0568
I1(HL)	I0&I2&!I3&!S0&S1	0.0100	n/a	n/a	0.0568
I1(HL)	I0&I2&I3&!S0&!S1	0.0100	n/a	n/a	0.0567
I1(HL)	I0&I2&I3&!S0&S1	0.0100	n/a	n/a	0.0568
I1(HL)	I0&I2&I3&S0&S1	0.0100	n/a	n/a	0.1828
I3(LH)	!I0&!I1&!I2&!S0&!S1	0.0100	n/a	n/a	0.0059
I3(LH)	!I0&!I1&!I2&!S0&S1	0.0100	n/a	n/a	0.0059
I3(LH)	!I0&!I1&!I2&S0&!S1	0.0100	n/a	n/a	0.0391
I3(LH)	!I0&!I1&I2&!S0&!S1	0.0100	n/a	n/a	0.0059
I3(LH)	!I0&!I1&I2&S0&!S1	0.0100	n/a	n/a	0.0391
I3(LH)	!I0&I1&!I2&!S0&!S1	0.0100	n/a	n/a	0.0059
I3(LH)	!I0&I1&!I2&!S0&S1	0.0100	n/a	n/a	0.0059
I3(LH)	!I0&I1&I2&!S0&!S1	0.0100	n/a	n/a	0.0059
I3(LH)	I0&!I1&!I2&!S0&S1	0.0100	n/a	n/a	0.0059
I3(LH)	I0&!I1&!I2&S0&!S1	0.0100	n/a	n/a	0.0391
I3(LH)	I0&!I1&I2&S0&!S1	0.0100	n/a	n/a	0.0391
I3(LH)	I0&I1&!I2&!S0&S1	0.0100	n/a	n/a	0.0059
I3(LH)	!I0&!I1&I2&!S0&S1	0.0100	n/a	n/a	0.0059
I3(LH)	!I0&I1&!I2&S0&!S1	0.0100	n/a	n/a	0.0391
I3(LH)	!I0&I1&I2&!S0&S1	0.0100	n/a	n/a	0.0059
I3(LH)	!I0&I1&I2&S0&!S1	0.0100	n/a	n/a	0.0391
I3(LH)	I0&!I1&!I2&!S0&!S1	0.0100	n/a	n/a	0.0059
I3(LH)	I0&!I1&I2&!S0&!S1	0.0100	n/a	n/a	0.0059
I3(LH)	I0&!I1&I2&!S0&S1	0.0100	n/a	n/a	0.0059
I3(LH)	I0&I1&!I2&!S0&!S1	0.0100	n/a	n/a	0.0059
I3(LH)	I0&I1&!I2&S0&!S1	0.0100	n/a	n/a	0.0391
I3(LH)	I0&I1&I2&!S0&!S1	0.0100	n/a	n/a	0.0059
I3(LH)	I0&I1&I2&!S0&S1	0.0100	n/a	n/a	0.0059
I3(LH)	I0&I1&I2&S0&!S1	0.0100	n/a	n/a	0.0391
I0(HL)	!I1&!I2&!I3&!S0&S1	0.0100	n/a	n/a	0.1750
I0(HL)	!I1&!I2&!I3&S0&!S1	0.0100	n/a	n/a	0.0655
I0(HL)	!I1&!I2&!I3&S0&S1	0.0100	n/a	n/a	0.0655
I0(HL)	!I1&!I2&I3&!S0&S1	0.0100	n/a	n/a	0.1750
I0(HL)	!I1&!I2&I3&S0&!S1	0.0100	n/a	n/a	0.0655
I0(HL)	!I1&I2&!I3&S0&!S1	0.0100	n/a	n/a	0.0655
I0(HL)	!I1&I2&!I3&S0&S1	0.0100	n/a	n/a	0.0655
I0(HL)	!I1&I2&I3&S0&!S1	0.0100	n/a	n/a	0.0655
I0(HL)	I1&!I2&!I3&!S0&S1	0.0100	n/a	n/a	0.1750
I0(HL)	I1&!I2&!I3&S0&S1	0.0100	n/a	n/a	0.0655
I0(HL)	I1&!I2&I3&!S0&S1	0.0100	n/a	n/a	0.1750
I0(HL)	I1&I2&!I3&S0&S1	0.0100	n/a	n/a	0.0655
I0(HL)	!I1&!I2&I3&S0&S1	0.0100	n/a	n/a	0.0655
I0(HL)	!I1&I2&!I3&!S0&S1	0.0100	n/a	n/a	0.1750
I0(HL)	!I1&I2&I3&!S0&S1	0.0100	n/a	n/a	0.1749
I0(HL)	!I1&I2&I3&S0&S1	0.0100	n/a	n/a	0.0655
I0(HL)	I1&!I2&!I3&S0&!S1	0.0100	n/a	n/a	0.0655
I0(HL)	I1&!I2&I3&S0&!S1	0.0100	n/a	n/a	0.0655
I0(HL)	I1&!I2&I3&S0&S1	0.0100	n/a	n/a	0.0655
I0(HL)	I1&I2&!I3&!S0&S1	0.0100	n/a	n/a	0.1749

continues on next page

Table 56 – continued from previous page

I0(HL)	I1&I2&!I3&S0&!S1	0.0100	n/a	n/a	0.0655
I0(HL)	I1&I2&I3&!S0&S1	0.0100	n/a	n/a	0.1749
I0(HL)	I1&I2&I3&S0&!S1	0.0100	n/a	n/a	0.0655
I0(HL)	I1&I2&I3&S0&S1	0.0100	n/a	n/a	0.0655
S1(HL)	!I0&!I1&!I2&!I3&!S0	0.0100	n/a	n/a	0.1110
S1(HL)	!I0&!I1&!I2&!I3&S0	0.0100	n/a	n/a	0.1110
S1(HL)	!I0&!I1&!I2&I3&!S0	0.0100	n/a	n/a	0.1110
S1(HL)	!I0&!I1&I2&!I3&S0	0.0100	n/a	n/a	0.1110
S1(HL)	!I0&I1&!I2&!I3&!S0	0.0100	n/a	n/a	0.1110
S1(HL)	!I0&I1&!I2&I3&!S0	0.0100	n/a	n/a	0.1110
S1(HL)	I0&!I1&!I2&!I3&S0	0.0100	n/a	n/a	0.1110
S1(HL)	I0&!I1&I2&!I3&S0	0.0100	n/a	n/a	0.1110
S1(HL)	!I0&I1&!I2&I3&S0	0.0100	n/a	n/a	0.1091
S1(HL)	!I0&I1&I2&I3&S0	0.0100	n/a	n/a	0.1091
S1(HL)	I0&!I1&I2&!I3&!S0	0.0100	n/a	n/a	0.1091
S1(HL)	I0&!I1&I2&I3&!S0	0.0100	n/a	n/a	0.1091
S1(HL)	I0&I1&!I2&I3&S0	0.0100	n/a	n/a	0.1091
S1(HL)	I0&I1&I2&!I3&!S0	0.0100	n/a	n/a	0.1091
S1(HL)	I0&I1&I2&I3&!S0	0.0100	n/a	n/a	0.1091
S1(HL)	I0&I1&I2&I3&S0	0.0100	n/a	n/a	0.1091
I0(LH)	!I1&!I2&!I3&!S0&S1	0.0100	n/a	n/a	0.0484
I0(LH)	!I1&!I2&!I3&S0&!S1	0.0100	n/a	n/a	0.0062
I0(LH)	!I1&!I2&!I3&S0&S1	0.0100	n/a	n/a	0.0062
I0(LH)	!I1&!I2&I3&!S0&S1	0.0100	n/a	n/a	0.0484
I0(LH)	!I1&!I2&I3&S0&!S1	0.0100	n/a	n/a	0.0062
I0(LH)	!I1&I2&!I3&S0&!S1	0.0100	n/a	n/a	0.0062
I0(LH)	!I1&I2&!I3&S0&S1	0.0100	n/a	n/a	0.0062
I0(LH)	!I1&I2&I3&S0&!S1	0.0100	n/a	n/a	0.0062
I0(LH)	I1&!I2&!I3&!S0&S1	0.0100	n/a	n/a	0.0484
I0(LH)	I1&!I2&!I3&S0&S1	0.0100	n/a	n/a	0.0062
I0(LH)	I1&!I2&I3&!S0&S1	0.0100	n/a	n/a	0.0484
I0(LH)	I1&I2&!I3&S0&S1	0.0100	n/a	n/a	0.0062
I0(LH)	!I1&!I2&I3&S0&S1	0.0100	n/a	n/a	0.0062
I0(LH)	!I1&I2&!I3&!S0&S1	0.0100	n/a	n/a	0.0484
I0(LH)	!I1&I2&I3&!S0&S1	0.0100	n/a	n/a	0.0484
I0(LH)	!I1&I2&I3&S0&S1	0.0100	n/a	n/a	0.0062
I0(LH)	I1&!I2&!I3&S0&!S1	0.0100	n/a	n/a	0.0062
I0(LH)	I1&!I2&I3&S0&!S1	0.0100	n/a	n/a	0.0062
I0(LH)	I1&!I2&I3&S0&S1	0.0100	n/a	n/a	0.0062
I0(LH)	I1&I2&!I3&!S0&S1	0.0100	n/a	n/a	0.0484
I0(LH)	I1&I2&!I3&S0&!S1	0.0100	n/a	n/a	0.0062
I0(LH)	I1&I2&I3&!S0&S1	0.0100	n/a	n/a	0.0484
I0(LH)	I1&I2&I3&S0&!S1	0.0100	n/a	n/a	0.0062
I0(LH)	I1&I2&I3&S0&S1	0.0100	n/a	n/a	0.0062
S0(LH)	!I0&!I1&!I2&!I3&!S1	0.0100	n/a	n/a	0.0015
S0(LH)	!I0&!I1&!I2&!I3&S1	0.0100	n/a	n/a	0.0015
S0(LH)	!I0&!I1&!I2&I3&!S1	0.0100	n/a	n/a	0.0300
S0(LH)	!I0&!I1&I2&!I3&!S1	0.0100	n/a	n/a	0.1716
S0(LH)	!I0&!I1&I2&I3&!S1	0.0100	n/a	n/a	0.0015
S0(LH)	!I0&I1&!I2&!I3&S1	0.0100	n/a	n/a	0.0225
S0(LH)	I0&!I1&!I2&!I3&S1	0.0100	n/a	n/a	0.1641
S0(LH)	I0&I1&!I2&!I3&S1	0.0100	n/a	n/a	0.0015

continues on next page

Table 56 – continued from previous page

S0(LH)	!I0&!I1&I2&I3&S1	0.0100	n/a	n/a	0.0015
S0(LH)	!I0&I1&I2&I3&S1	0.0100	n/a	n/a	0.0225
S0(LH)	I0&!I1&I2&I3&S1	0.0100	n/a	n/a	0.1642
S0(LH)	I0&I1&!I2&!I3&!S1	0.0100	n/a	n/a	0.0015
S0(LH)	I0&I1&!I2&I3&!S1	0.0100	n/a	n/a	0.0301
S0(LH)	I0&I1&I2&!I3&!S1	0.0100	n/a	n/a	0.1717
S0(LH)	I0&I1&I2&I3&!S1	0.0100	n/a	n/a	0.0015
S0(LH)	I0&I1&I2&I3&S1	0.0100	n/a	n/a	0.0015
I2(HL)	!I0&!I1&!I3&!S0&!S1	0.0100	n/a	n/a	0.1784
I2(HL)	!I0&!I1&!I3&S0&!S1	0.0100	n/a	n/a	0.0617
I2(HL)	!I0&!I1&!I3&S0&S1	0.0100	n/a	n/a	0.0617
I2(HL)	!I0&!I1&I3&!S0&!S1	0.0100	n/a	n/a	0.1783
I2(HL)	!I0&!I1&I3&S0&!S1	0.0100	n/a	n/a	0.0617
I2(HL)	!I0&I1&!I3&!S0&!S1	0.0100	n/a	n/a	0.1783
I2(HL)	!I0&I1&!I3&S0&S1	0.0100	n/a	n/a	0.0617
I2(HL)	!I0&I1&I3&!S0&!S1	0.0100	n/a	n/a	0.1783
I2(HL)	I0&!I1&!I3&S0&!S1	0.0100	n/a	n/a	0.0616
I2(HL)	I0&!I1&!I3&S0&S1	0.0100	n/a	n/a	0.0617
I2(HL)	I0&!I1&I3&S0&!S1	0.0100	n/a	n/a	0.0617
I2(HL)	I0&I1&!I3&S0&S1	0.0100	n/a	n/a	0.0617
I2(HL)	!I0&!I1&I3&S0&S1	0.0100	n/a	n/a	0.0617
I2(HL)	!I0&I1&!I3&S0&!S1	0.0100	n/a	n/a	0.0617
I2(HL)	!I0&I1&I3&S0&!S1	0.0100	n/a	n/a	0.0617
I2(HL)	!I0&I1&I3&S0&S1	0.0100	n/a	n/a	0.0617
I2(HL)	I0&!I1&!I3&!S0&!S1	0.0100	n/a	n/a	0.1783
I2(HL)	I0&!I1&I3&!S0&!S1	0.0100	n/a	n/a	0.1783
I2(HL)	I0&!I1&I3&S0&S1	0.0100	n/a	n/a	0.0617
I2(HL)	I0&I1&!I3&!S0&!S1	0.0100	n/a	n/a	0.1783
I2(HL)	I0&I1&!I3&S0&!S1	0.0100	n/a	n/a	0.0617
I2(HL)	I0&I1&I3&!S0&!S1	0.0100	n/a	n/a	0.1783
I2(HL)	I0&I1&I3&S0&!S1	0.0100	n/a	n/a	0.0617
I2(HL)	I0&I1&I3&S0&S1	0.0100	n/a	n/a	0.0617
S1(LH)	!I0&!I1&!I2&!I3&!S0	0.0100	n/a	n/a	0.0013
S1(LH)	!I0&!I1&!I2&!I3&S0	0.0100	n/a	n/a	0.0013
S1(LH)	!I0&!I1&!I2&I3&!S0	0.0100	n/a	n/a	0.0013
S1(LH)	!I0&!I1&I2&!I3&S0	0.0100	n/a	n/a	0.0013
S1(LH)	!I0&I1&!I2&!I3&!S0	0.0100	n/a	n/a	0.0013
S1(LH)	!I0&I1&!I2&I3&!S0	0.0100	n/a	n/a	0.0013
S1(LH)	I0&!I1&!I2&!I3&S0	0.0100	n/a	n/a	0.0013
S1(LH)	I0&!I1&I2&!I3&S0	0.0100	n/a	n/a	0.0013
S1(LH)	!I0&I1&!I2&I3&S0	0.0100	n/a	n/a	0.0013
S1(LH)	!I0&I1&I2&I3&S0	0.0100	n/a	n/a	0.0013
S1(LH)	I0&!I1&I2&!I3&!S0	0.0100	n/a	n/a	0.0013
S1(LH)	I0&!I1&I2&I3&!S0	0.0100	n/a	n/a	0.0013
S1(LH)	I0&I1&!I2&I3&S0	0.0100	n/a	n/a	0.0013
S1(LH)	I0&I1&I2&!I3&!S0	0.0100	n/a	n/a	0.0013
S1(LH)	I0&I1&I2&I3&!S0	0.0100	n/a	n/a	0.0013
S1(LH)	I0&I1&I2&I3&S0	0.0100	n/a	n/a	0.0013

LEAKAGE POWER

When Condition	Power (nW)
!I0&!I1&!I2&!I3&!S0&!S1	0.5403
!I0&!I1&!I2&!I3&!S0&S1	0.5390
!I0&!I1&!I2&!I3&S0&!S1	0.5390
!I0&!I1&!I2&!I3&S0&S1	0.5378
!I0&!I1&!I2&I3&!S0&!S1	0.5425
!I0&!I1&!I2&I3&!S0&S1	0.5412
!I0&!I1&!I2&I3&S0&!S1	0.5447
!I0&!I1&I2&!I3&!S0&!S1	0.5459
!I0&!I1&I2&!I3&S0&!S1	0.5412
!I0&!I1&I2&!I3&S0&S1	0.5400
!I0&!I1&I2&I3&!S0&!S1	0.5434
!I0&!I1&I2&I3&S0&!S1	0.5421
!I0&I1&!I2&!I3&!S0&!S1	0.5425
!I0&I1&!I2&!I3&!S0&S1	0.5412
!I0&I1&!I2&!I3&S0&S1	0.5434
!I0&I1&!I2&I3&!S0&!S1	0.5447
!I0&I1&!I2&I3&!S0&S1	0.5434
!I0&I1&I2&!I3&!S0&!S1	0.5481
!I0&I1&I2&!I3&S0&S1	0.5456
!I0&I1&I2&I3&!S0&!S1	0.5456
I0&!I1&!I2&!I3&!S0&S1	0.5447
I0&!I1&!I2&!I3&S0&!S1	0.5412
I0&!I1&!I2&!I3&S0&S1	0.5400
I0&!I1&!I2&I3&!S0&S1	0.5468
I0&!I1&!I2&I3&S0&!S1	0.5468
I0&!I1&I2&!I3&S0&!S1	0.5434
I0&!I1&I2&!I3&S0&S1	0.5421
I0&!I1&I2&I3&S0&!S1	0.5443
I0&I1&!I2&!I3&!S0&S1	0.5421
I0&I1&!I2&!I3&S0&S1	0.5409
I0&I1&!I2&I3&!S0&S1	0.5443
I0&I1&I2&!I3&S0&S1	0.5431
!I0&!I1&!I2&I3&S0&S1	0.5440
!I0&!I1&I2&!I3&!S0&S1	0.5452
!I0&!I1&I2&I3&!S0&S1	0.5427
!I0&!I1&I2&I3&S0&S1	0.5415
!I0&I1&!I2&!I3&S0&!S1	0.5452
!I0&I1&!I2&I3&S0&!S1	0.5462
!I0&I1&!I2&I3&S0&S1	0.5450
!I0&I1&I2&!I3&!S0&S1	0.5474
!I0&I1&I2&!I3&S0&!S1	0.5474
!I0&I1&I2&I3&!S0&S1	0.5450
!I0&I1&I2&I3&S0&!S1	0.5436
!I0&I1&I2&I3&S0&S1	0.5424
I0&!I1&!I2&!I3&!S0&!S1	0.5465
I0&!I1&!I2&I3&!S0&!S1	0.5487
I0&!I1&!I2&I3&S0&S1	0.5462
I0&!I1&I2&!I3&!S0&!S1	0.5474
I0&!I1&I2&!I3&!S0&S1	0.5462
I0&!I1&I2&I3&!S0&!S1	0.5450
I0&!I1&I2&I3&!S0&S1	0.5436

continues on next page

Table 57 – continued from previous page

I0&!I1&I2&I3&S0&S1	0.5436
I0&I1&!I2&!I3&!S0&!S1	0.5440
I0&I1&!I2&!I3&S0&!S1	0.5427
I0&I1&!I2&I3&!S0&!S1	0.5462
I0&I1&!I2&I3&S0&!S1	0.5436
I0&I1&!I2&I3&S0&S1	0.5424
I0&I1&I2&!I3&!S0&!S1	0.5450
I0&I1&I2&!I3&!S0&S1	0.5436
I0&I1&I2&!I3&S0&!S1	0.5450
I0&I1&I2&I3&!S0&!S1	0.5424
I0&I1&I2&I3&!S0&S1	0.5411
I0&I1&I2&I3&S0&!S1	0.5411
I0&I1&I2&I3&S0&S1	0.5399

gf180mcu_fd_sc_mcu7t5v0__mux4_2

gf180mcu_fd_sc_mcu7t5v0__mux4_2 symbol

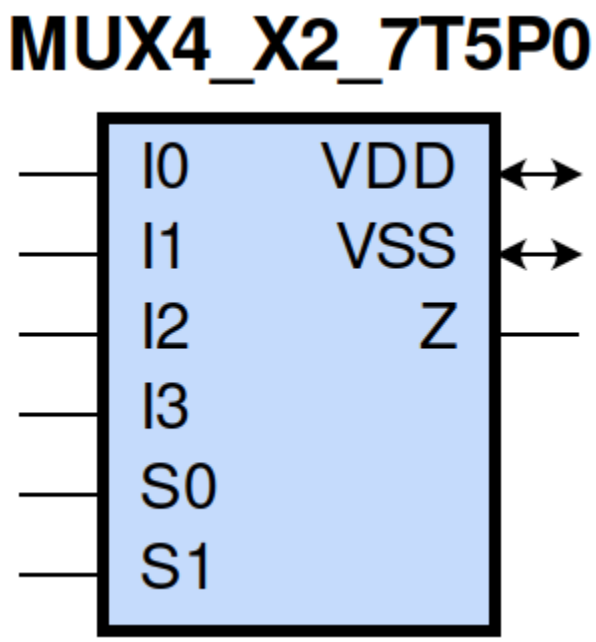

gf180mcu_fd_sc_mcu7t5v0__mux4_2 schematic

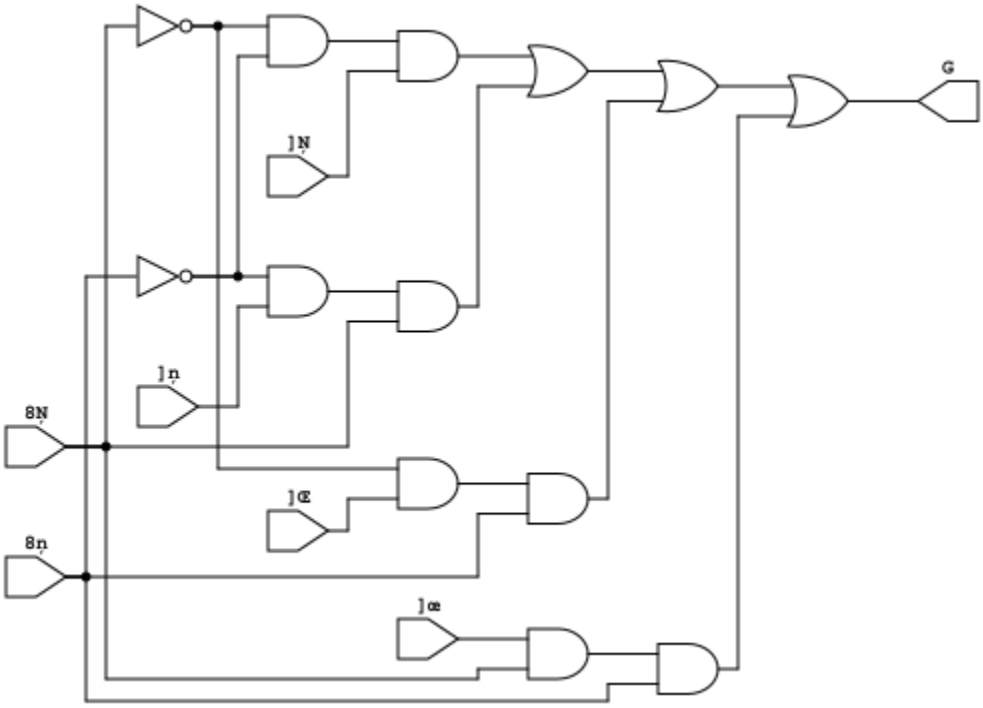

gf180mcu_fd_sc_mcu7t5v0__mux4_2 layout

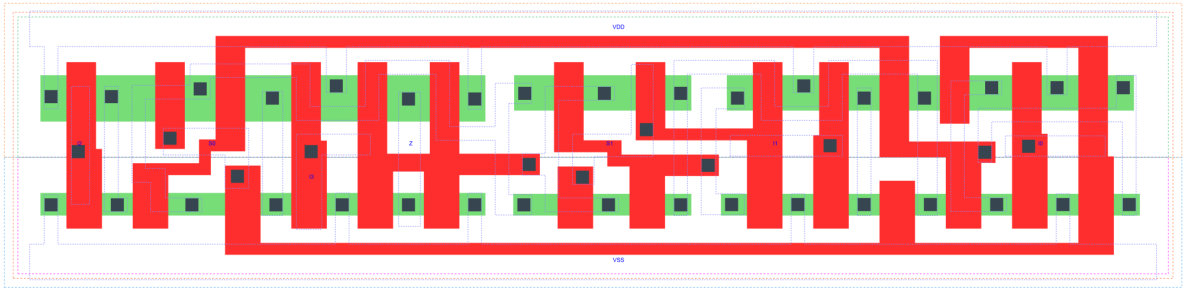

MUX4_X2 is a 4-to-1 multiplexer, 2X drive strength | | Attributes

Attribute	Value
area	74.636800 μm^2

OUTPUT FUNCTIONS

Output Pin	Function
Z	((I0&(!S0)&(!S1))|(I1&S0&(!S1))|(I2&(!S0)&S1)|(I3&S0&S1))

TRUTH TABLE FOR Z

I0	I1	I2	I3	S0	S1	Z
1	?	?	?	0	0	1
?	1	?	?	1	0	1
?	?	1	?	0	1	1
?	?	?	1	1	1	1
0	?	?	?	0	0	0
?	0	?	?	1	0	0
?	?	0	?	0	1	0
?	?	?	0	1	1	0

FUNCTIONAL SCHEMATIC

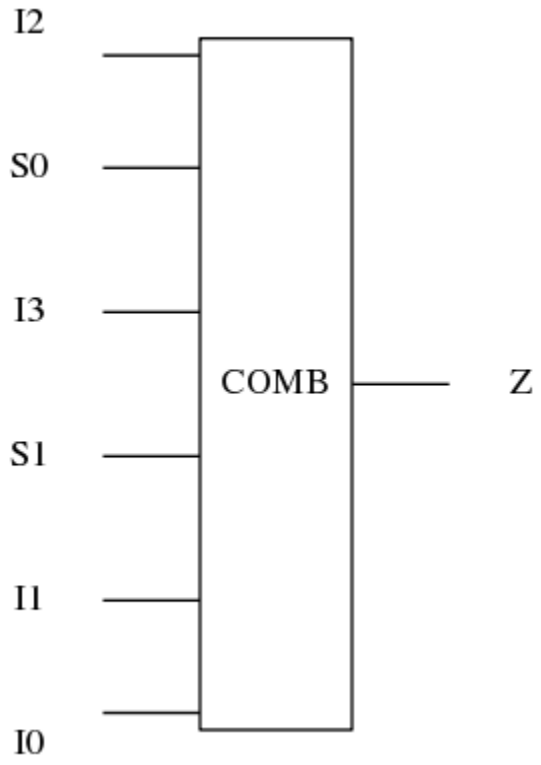

PIN CAPACITANCE (pf)

Pin	Type	Capacitance (pf)
I2	input	0.0032
S0	input	0.0106
I3	input	0.0034
S1	input	0.0057
I1	input	0.0029
I0	input	0.0029

DELAY AND OUTPUT TRANSITION TIME corresponding to min slew and load

Input Pin	Output	When Condition	Tin (ns)	Out Load (pf)	Delay (ns)	Tout (ns)
I2(HL)	Z(HL)	!I0&!I1&!I3&!S0&S1	0.0100	0.0010	0.4457	0.0798
I2(HL)	Z(HL)	!I0&!I1&I3&!S0&S1	0.0100	0.0010	0.4457	0.0798
I2(HL)	Z(HL)	!I0&I1&!I3&!S0&S1	0.0100	0.0010	0.4457	0.0798
I2(HL)	Z(HL)	!I0&I1&I3&!S0&S1	0.0100	0.0010	0.4457	0.0798
I2(HL)	Z(HL)	I0&!I1&!I3&!S0&S1	0.0100	0.0010	0.4457	0.0798
I2(HL)	Z(HL)	I0&!I1&I3&!S0&S1	0.0100	0.0010	0.4457	0.0799
I2(HL)	Z(HL)	I0&I1&!I3&!S0&S1	0.0100	0.0010	0.4457	0.0798
I2(HL)	Z(HL)	I0&I1&I3&!S0&S1	0.0100	0.0010	0.4457	0.0799
I2(LH)	Z(LH)	!I0&!I1&!I3&!S0&S1	0.0100	0.0010	0.4759	0.0652
I2(LH)	Z(LH)	!I0&!I1&I3&!S0&S1	0.0100	0.0010	0.4759	0.0652
I2(LH)	Z(LH)	!I0&I1&!I3&!S0&S1	0.0100	0.0010	0.4759	0.0652
I2(LH)	Z(LH)	!I0&I1&I3&!S0&S1	0.0100	0.0010	0.4759	0.0652
I2(LH)	Z(LH)	I0&!I1&!I3&!S0&S1	0.0100	0.0010	0.4759	0.0652
I2(LH)	Z(LH)	I0&!I1&I3&!S0&S1	0.0100	0.0010	0.4759	0.0652
I2(LH)	Z(LH)	I0&I1&!I3&!S0&S1	0.0100	0.0010	0.4759	0.0652
I2(LH)	Z(LH)	I0&I1&I3&!S0&S1	0.0100	0.0010	0.4759	0.0652
S0(HL)	Z(LH)	!I0&!I1&I2&!I3&S1	0.0100	0.0010	0.5695	0.0670
S0(HL)	Z(LH)	!I0&I1&I2&!I3&S1	0.0100	0.0010	0.5578	0.0668
S0(HL)	Z(LH)	I0&!I1&!I2&!I3&!S1	0.0100	0.0010	0.5640	0.0655
S0(HL)	Z(LH)	I0&!I1&!I2&I3&!S1	0.0100	0.0010	0.5488	0.0651
S0(HL)	Z(LH)	I0&!I1&I2&!I3&!S1	0.0100	0.0010	0.5728	0.0656
S0(HL)	Z(LH)	I0&!I1&I2&!I3&S1	0.0100	0.0010	0.5772	0.0671
S0(HL)	Z(LH)	I0&!I1&I2&I3&!S1	0.0100	0.0010	0.5582	0.0655
S0(HL)	Z(LH)	I0&I1&I2&!I3&S1	0.0100	0.0010	0.5659	0.0669
S0(HL)	Z(HL)	!I0&!I1&!I2&I3&S1	0.0100	0.0010	0.4697	0.0805
S0(HL)	Z(HL)	!I0&I1&!I2&!I3&!S1	0.0100	0.0010	0.5134	0.0867
S0(HL)	Z(HL)	!I0&I1&!I2&I3&!S1	0.0100	0.0010	0.5030	0.0862
S0(HL)	Z(HL)	!I0&I1&!I2&I3&S1	0.0100	0.0010	0.4640	0.0799
S0(HL)	Z(HL)	!I0&I1&I2&!I3&!S1	0.0100	0.0010	0.5195	0.0871
S0(HL)	Z(HL)	!I0&I1&I2&I3&!S1	0.0100	0.0010	0.5097	0.0870
S0(HL)	Z(HL)	I0&!I1&!I2&I3&S1	0.0100	0.0010	0.4733	0.0809
S0(HL)	Z(HL)	I0&I1&!I2&I3&S1	0.0100	0.0010	0.4681	0.0804
S0(LH)	Z(LH)	!I0&!I1&!I2&I3&S1	0.0100	0.0010	0.4388	0.0649
S0(LH)	Z(LH)	!I0&I1&!I2&!I3&!S1	0.0100	0.0010	0.4244	0.0637
S0(LH)	Z(LH)	!I0&I1&!I2&I3&!S1	0.0100	0.0010	0.4239	0.0640
S0(LH)	Z(LH)	!I0&I1&!I2&I3&S1	0.0100	0.0010	0.4377	0.0652

continues on next page

Table 58 – continued from previous page

S0(LH)	Z(LH)	!I0&I1&I2&!I3&!S1	0.0100	0.0010	0.4246	0.0633
S0(LH)	Z(LH)	!I0&I1&I2&I3&!S1	0.0100	0.0010	0.4242	0.0637
S0(LH)	Z(LH)	I0&!I1&!I2&I3&S1	0.0100	0.0010	0.4394	0.0647
S0(LH)	Z(LH)	I0&I1&!I2&I3&S1	0.0100	0.0010	0.4387	0.0652
S0(LH)	Z(HL)	!I0&!I1&I2&!I3&S1	0.0100	0.0010	0.4513	0.0803
S0(LH)	Z(HL)	!I0&I1&I2&!I3&S1	0.0100	0.0010	0.4463	0.0800
S0(LH)	Z(HL)	I0&!I1&!I2&!I3&!S1	0.0100	0.0010	0.4757	0.0867
S0(LH)	Z(HL)	I0&!I1&!I2&I3&!S1	0.0100	0.0010	0.4701	0.0867
S0(LH)	Z(HL)	I0&!I1&I2&!I3&!S1	0.0100	0.0010	0.4767	0.0868
S0(LH)	Z(HL)	I0&!I1&I2&!I3&S1	0.0100	0.0010	0.4531	0.0802
S0(LH)	Z(HL)	I0&!I1&I2&I3&!S1	0.0100	0.0010	0.4745	0.0866
S0(LH)	Z(HL)	I0&I1&I2&!I3&S1	0.0100	0.0010	0.4509	0.0803
I3(LH)	Z(LH)	!I0&!I1&!I2&S0&S1	0.0100	0.0010	0.4702	0.0650
I3(LH)	Z(LH)	!I0&!I1&I2&S0&S1	0.0100	0.0010	0.4702	0.0650
I3(LH)	Z(LH)	!I0&I1&!I2&S0&S1	0.0100	0.0010	0.4702	0.0650
I3(LH)	Z(LH)	!I0&I1&I2&S0&S1	0.0100	0.0010	0.4702	0.0650
I3(LH)	Z(LH)	I0&!I1&!I2&S0&S1	0.0100	0.0010	0.4702	0.0650
I3(LH)	Z(LH)	I0&!I1&I2&S0&S1	0.0100	0.0010	0.4702	0.0650
I3(LH)	Z(LH)	I0&I1&!I2&S0&S1	0.0100	0.0010	0.4702	0.0650
I3(LH)	Z(LH)	I0&I1&I2&S0&S1	0.0100	0.0010	0.4702	0.0650
I3(HL)	Z(HL)	!I0&!I1&!I2&S0&S1	0.0100	0.0010	0.4463	0.0803
I3(HL)	Z(HL)	!I0&!I1&I2&S0&S1	0.0100	0.0010	0.4463	0.0803
I3(HL)	Z(HL)	!I0&I1&!I2&S0&S1	0.0100	0.0010	0.4462	0.0800
I3(HL)	Z(HL)	!I0&I1&I2&S0&S1	0.0100	0.0010	0.4463	0.0800
I3(HL)	Z(HL)	I0&!I1&!I2&S0&S1	0.0100	0.0010	0.4463	0.0803
I3(HL)	Z(HL)	I0&!I1&I2&S0&S1	0.0100	0.0010	0.4463	0.0803
I3(HL)	Z(HL)	I0&I1&!I2&S0&S1	0.0100	0.0010	0.4462	0.0800
I3(HL)	Z(HL)	I0&I1&I2&S0&S1	0.0100	0.0010	0.4463	0.0800
S1(LH)	Z(HL)	!I0&I1&!I2&!I3&S0	0.0100	0.0010	0.2520	0.0641
S1(LH)	Z(HL)	!I0&I1&I2&!I3&S0	0.0100	0.0010	0.2520	0.0641
S1(LH)	Z(HL)	I0&!I1&!I2&!I3&!S0	0.0100	0.0010	0.2521	0.0642
S1(LH)	Z(HL)	I0&!I1&!I2&I3&!S0	0.0100	0.0010	0.2522	0.0642
S1(LH)	Z(HL)	I0&I1&!I2&!I3&!S0	0.0100	0.0010	0.2521	0.0642
S1(LH)	Z(HL)	I0&I1&!I2&!I3&S0	0.0100	0.0010	0.2520	0.0641
S1(LH)	Z(HL)	I0&I1&!I2&I3&!S0	0.0100	0.0010	0.2522	0.0642
S1(LH)	Z(HL)	I0&I1&I2&!I3&S0	0.0100	0.0010	0.2520	0.0641
S1(LH)	Z(LH)	!I0&!I1&!I2&I3&S0	0.0100	0.0010	0.2455	0.0602
S1(LH)	Z(LH)	!I0&!I1&I2&!I3&!S0	0.0100	0.0010	0.2452	0.0600
S1(LH)	Z(LH)	!I0&!I1&I2&I3&!S0	0.0100	0.0010	0.2452	0.0600
S1(LH)	Z(LH)	!I0&!I1&I2&I3&S0	0.0100	0.0010	0.2455	0.0602
S1(LH)	Z(LH)	!I0&I1&I2&!I3&!S0	0.0100	0.0010	0.2453	0.0600
S1(LH)	Z(LH)	!I0&I1&I2&I3&!S0	0.0100	0.0010	0.2453	0.0599
S1(LH)	Z(LH)	I0&!I1&!I2&I3&S0	0.0100	0.0010	0.2455	0.0602
S1(LH)	Z(LH)	I0&!I1&I2&I3&S0	0.0100	0.0010	0.2455	0.0601
S1(HL)	Z(HL)	!I0&!I1&!I2&I3&S0	0.0100	0.0010	0.2862	0.0665
S1(HL)	Z(HL)	!I0&!I1&I2&!I3&!S0	0.0100	0.0010	0.2857	0.0663
S1(HL)	Z(HL)	!I0&!I1&I2&I3&!S0	0.0100	0.0010	0.2857	0.0663
S1(HL)	Z(HL)	!I0&!I1&I2&I3&S0	0.0100	0.0010	0.2862	0.0665
S1(HL)	Z(HL)	!I0&I1&I2&!I3&!S0	0.0100	0.0010	0.2857	0.0663
S1(HL)	Z(HL)	!I0&I1&I2&I3&!S0	0.0100	0.0010	0.2857	0.0663
S1(HL)	Z(HL)	I0&!I1&!I2&I3&S0	0.0100	0.0010	0.2862	0.0665
S1(HL)	Z(HL)	I0&!I1&I2&I3&S0	0.0100	0.0010	0.2862	0.0665

continues on next page

Table 58 – continued from previous page

S1(HL)	Z(LH)	!I0&I1&!I2&!I3&S0	0.0100	0.0010	0.3390	0.0609
S1(HL)	Z(LH)	!I0&I1&I2&!I3&S0	0.0100	0.0010	0.3390	0.0609
S1(HL)	Z(LH)	I0&!I1&!I2&!I3&!S0	0.0100	0.0010	0.3384	0.0609
S1(HL)	Z(LH)	I0&!I1&!I2&I3&!S0	0.0100	0.0010	0.3384	0.0609
S1(HL)	Z(LH)	I0&I1&!I2&!I3&!S0	0.0100	0.0010	0.3384	0.0609
S1(HL)	Z(LH)	I0&I1&!I2&!I3&S0	0.0100	0.0010	0.3390	0.0609
S1(HL)	Z(LH)	I0&I1&!I2&I3&!S0	0.0100	0.0010	0.3384	0.0609
S1(HL)	Z(LH)	I0&I1&I2&!I3&S0	0.0100	0.0010	0.3390	0.0609
I1(LH)	Z(LH)	!I0&!I2&!I3&S0&!S1	0.0100	0.0010	0.4486	0.0640
I1(LH)	Z(LH)	!I0&!I2&I3&S0&!S1	0.0100	0.0010	0.4486	0.0637
I1(LH)	Z(LH)	!I0&I2&!I3&S0&!S1	0.0100	0.0010	0.4488	0.0640
I1(LH)	Z(LH)	!I0&I2&I3&S0&!S1	0.0100	0.0010	0.4488	0.0640
I1(LH)	Z(LH)	I0&!I2&!I3&S0&!S1	0.0100	0.0010	0.4487	0.0636
I1(LH)	Z(LH)	I0&!I2&I3&S0&!S1	0.0100	0.0010	0.4487	0.0639
I1(LH)	Z(LH)	I0&I2&!I3&S0&!S1	0.0100	0.0010	0.4487	0.0639
I1(LH)	Z(LH)	I0&I2&I3&S0&!S1	0.0100	0.0010	0.4486	0.0637
I1(HL)	Z(HL)	!I0&!I2&!I3&S0&!S1	0.0100	0.0010	0.4820	0.0864
I1(HL)	Z(HL)	!I0&!I2&I3&S0&!S1	0.0100	0.0010	0.4822	0.0866
I1(HL)	Z(HL)	!I0&I2&!I3&S0&!S1	0.0100	0.0010	0.4822	0.0866
I1(HL)	Z(HL)	!I0&I2&I3&S0&!S1	0.0100	0.0010	0.4822	0.0866
I1(HL)	Z(HL)	I0&!I2&!I3&S0&!S1	0.0100	0.0010	0.4822	0.0866
I1(HL)	Z(HL)	I0&!I2&I3&S0&!S1	0.0100	0.0010	0.4822	0.0866
I1(HL)	Z(HL)	I0&I2&!I3&S0&!S1	0.0100	0.0010	0.4822	0.0866
I1(HL)	Z(HL)	I0&I2&I3&S0&!S1	0.0100	0.0010	0.4822	0.0866
I0(LH)	Z(LH)	!I1&!I2&!I3&!S0&!S1	0.0100	0.0010	0.4582	0.0639
I0(LH)	Z(LH)	!I1&!I2&I3&!S0&!S1	0.0100	0.0010	0.4582	0.0639
I0(LH)	Z(LH)	!I1&I2&!I3&!S0&!S1	0.0100	0.0010	0.4582	0.0640
I0(LH)	Z(LH)	!I1&I2&I3&!S0&!S1	0.0100	0.0010	0.4582	0.0640
I0(LH)	Z(LH)	I1&!I2&!I3&!S0&!S1	0.0100	0.0010	0.4582	0.0639
I0(LH)	Z(LH)	I1&!I2&I3&!S0&!S1	0.0100	0.0010	0.4582	0.0640
I0(LH)	Z(LH)	I1&I2&!I3&!S0&!S1	0.0100	0.0010	0.4582	0.0640
I0(LH)	Z(LH)	I1&I2&I3&!S0&!S1	0.0100	0.0010	0.4582	0.0640
I0(HL)	Z(HL)	!I1&!I2&!I3&!S0&!S1	0.0100	0.0010	0.4890	0.0867
I0(HL)	Z(HL)	!I1&!I2&I3&!S0&!S1	0.0100	0.0010	0.4890	0.0867
I0(HL)	Z(HL)	!I1&I2&!I3&!S0&!S1	0.0100	0.0010	0.4890	0.0867
I0(HL)	Z(HL)	!I1&I2&I3&!S0&!S1	0.0100	0.0010	0.4892	0.0868
I0(HL)	Z(HL)	I1&!I2&!I3&!S0&!S1	0.0100	0.0010	0.4892	0.0868
I0(HL)	Z(HL)	I1&!I2&I3&!S0&!S1	0.0100	0.0010	0.4891	0.0869
I0(HL)	Z(HL)	I1&I2&!I3&!S0&!S1	0.0100	0.0010	0.4890	0.0867
I0(HL)	Z(HL)	I1&I2&I3&!S0&!S1	0.0100	0.0010	0.4892	0.0868

DYNAMIC ENERGY

Input Pin	When Condition	Tin (ns)	Output	Out Load (pf)	Energy (uW/MHz)
S1	!I0&I1&!I2&!I3&S0	0.0100	Z(HL)	0.0010	0.2993
S1	!I0&I1&I2&!I3&S0	0.0100	Z(HL)	0.0010	0.2993
S1	I0&!I1&!I2&!I3&!S0	0.0100	Z(HL)	0.0010	0.2995

continues on next page

Table 59 – continued from previous page

S1	I0&!I1&!I2&I3&!S0	0.0100	Z(HL)	0.0010	0.2996
S1	I0&I1&!I2&!I3&!S0	0.0100	Z(HL)	0.0010	0.2995
S1	I0&I1&!I2&!I3&S0	0.0100	Z(HL)	0.0010	0.2993
S1	I0&I1&!I2&I3&!S0	0.0100	Z(HL)	0.0010	0.2996
S1	I0&I1&I2&!I3&S0	0.0100	Z(HL)	0.0010	0.2993
S1	!I0&!I1&!I2&I3&S0	0.0100	Z(HL)	0.0010	0.3870
S1	!I0&!I1&I2&!I3&!S0	0.0100	Z(HL)	0.0010	0.3868
S1	!I0&!I1&I2&I3&!S0	0.0100	Z(HL)	0.0010	0.3868
S1	!I0&!I1&I2&I3&S0	0.0100	Z(HL)	0.0010	0.3870
S1	!I0&I1&I2&!I3&!S0	0.0100	Z(HL)	0.0010	0.3868
S1	!I0&I1&I2&I3&!S0	0.0100	Z(HL)	0.0010	0.3868
S1	I0&!I1&!I2&I3&S0	0.0100	Z(HL)	0.0010	0.3870
S1	I0&!I1&I2&I3&S0	0.0100	Z(HL)	0.0010	0.3870
S1	!I0&!I1&!I2&I3&S0	0.0100	Z(LH)	0.0010	0.1824
S1	!I0&!I1&I2&!I3&!S0	0.0100	Z(LH)	0.0010	0.1823
S1	!I0&!I1&I2&I3&!S0	0.0100	Z(LH)	0.0010	0.1823
S1	!I0&!I1&I2&I3&S0	0.0100	Z(LH)	0.0010	0.1824
S1	!I0&I1&I2&!I3&!S0	0.0100	Z(LH)	0.0010	0.1823
S1	!I0&I1&I2&I3&!S0	0.0100	Z(LH)	0.0010	0.1822
S1	I0&!I1&!I2&I3&S0	0.0100	Z(LH)	0.0010	0.1824
S1	I0&!I1&I2&I3&S0	0.0100	Z(LH)	0.0010	0.1824
S1	!I0&I1&!I2&!I3&S0	0.0100	Z(LH)	0.0010	0.3321
S1	!I0&I1&I2&!I3&S0	0.0100	Z(LH)	0.0010	0.3321
S1	I0&!I1&!I2&!I3&!S0	0.0100	Z(LH)	0.0010	0.3321
S1	I0&!I1&!I2&I3&!S0	0.0100	Z(LH)	0.0010	0.3321
S1	I0&I1&!I2&!I3&!S0	0.0100	Z(LH)	0.0010	0.3321
S1	I0&I1&!I2&!I3&S0	0.0100	Z(LH)	0.0010	0.3321
S1	I0&I1&!I2&I3&!S0	0.0100	Z(LH)	0.0010	0.3321
S1	I0&I1&I2&!I3&S0	0.0100	Z(LH)	0.0010	0.3321
I0	!I1&!I2&!I3&!S0&!S1	0.0100	Z(LH)	0.0010	0.2742
I0	!I1&!I2&I3&!S0&!S1	0.0100	Z(LH)	0.0010	0.2743
I0	!I1&I2&!I3&!S0&!S1	0.0100	Z(LH)	0.0010	0.2743
I0	!I1&I2&I3&!S0&!S1	0.0100	Z(LH)	0.0010	0.2742
I0	I1&!I2&!I3&!S0&!S1	0.0100	Z(LH)	0.0010	0.2743
I0	I1&!I2&I3&!S0&!S1	0.0100	Z(LH)	0.0010	0.2742
I0	I1&I2&!I3&!S0&!S1	0.0100	Z(LH)	0.0010	0.2742
I0	I1&I2&I3&!S0&!S1	0.0100	Z(LH)	0.0010	0.2742
I3	!I0&!I1&!I2&S0&S1	0.0100	Z(LH)	0.0010	0.2578
I3	!I0&!I1&I2&S0&S1	0.0100	Z(LH)	0.0010	0.2578
I3	!I0&I1&!I2&S0&S1	0.0100	Z(LH)	0.0010	0.2578
I3	!I0&I1&I2&S0&S1	0.0100	Z(LH)	0.0010	0.2578
I3	I0&!I1&!I2&S0&S1	0.0100	Z(LH)	0.0010	0.2578
I3	I0&!I1&I2&S0&S1	0.0100	Z(LH)	0.0010	0.2578
I3	I0&I1&!I2&S0&S1	0.0100	Z(LH)	0.0010	0.2578
I3	I0&I1&I2&S0&S1	0.0100	Z(LH)	0.0010	0.2578
I2	!I0&!I1&!I3&!S0&S1	0.0100	Z(HL)	0.0010	0.5331
I2	!I0&!I1&I3&!S0&S1	0.0100	Z(HL)	0.0010	0.5331
I2	!I0&I1&!I3&!S0&S1	0.0100	Z(HL)	0.0010	0.5331
I2	!I0&I1&I3&!S0&S1	0.0100	Z(HL)	0.0010	0.5331
I2	I0&!I1&!I3&!S0&S1	0.0100	Z(HL)	0.0010	0.5331
I2	I0&!I1&I3&!S0&S1	0.0100	Z(HL)	0.0010	0.5331
I2	I0&I1&!I3&!S0&S1	0.0100	Z(HL)	0.0010	0.5331

continues on next page

Table 59 – continued from previous page

I2	I0&I1&I3&!S0&S1	0.0100	Z(HL)	0.0010	0.5331
I1	!I0&!I2&!I3&S0&!S1	0.0100	Z(LH)	0.0010	0.2558
I1	!I0&!I2&I3&S0&!S1	0.0100	Z(LH)	0.0010	0.2557
I1	!I0&I2&!I3&S0&!S1	0.0100	Z(LH)	0.0010	0.2558
I1	!I0&I2&I3&S0&!S1	0.0100	Z(LH)	0.0010	0.2558
I1	I0&!I2&!I3&S0&!S1	0.0100	Z(LH)	0.0010	0.2557
I1	I0&!I2&I3&S0&!S1	0.0100	Z(LH)	0.0010	0.2558
I1	I0&I2&!I3&S0&!S1	0.0100	Z(LH)	0.0010	0.2558
I1	I0&I2&I3&S0&!S1	0.0100	Z(LH)	0.0010	0.2557
I3	!I0&!I1&!I2&S0&S1	0.0100	Z(HL)	0.0010	0.5501
I3	!I0&!I1&I2&S0&S1	0.0100	Z(HL)	0.0010	0.5502
I3	!I0&I1&!I2&S0&S1	0.0100	Z(HL)	0.0010	0.5501
I3	!I0&I1&I2&S0&S1	0.0100	Z(HL)	0.0010	0.5502
I3	I0&!I1&!I2&S0&S1	0.0100	Z(HL)	0.0010	0.5501
I3	I0&!I1&I2&S0&S1	0.0100	Z(HL)	0.0010	0.5502
I3	I0&I1&!I2&S0&S1	0.0100	Z(HL)	0.0010	0.5501
I3	I0&I1&I2&S0&S1	0.0100	Z(HL)	0.0010	0.5501
I0	!I1&!I2&!I3&!S0&!S1	0.0100	Z(HL)	0.0010	0.5145
I0	!I1&!I2&I3&!S0&!S1	0.0100	Z(HL)	0.0010	0.5145
I0	!I1&I2&!I3&!S0&!S1	0.0100	Z(HL)	0.0010	0.5145
I0	!I1&I2&I3&!S0&!S1	0.0100	Z(HL)	0.0010	0.5145
I0	I1&!I2&!I3&!S0&!S1	0.0100	Z(HL)	0.0010	0.5145
I0	I1&!I2&I3&!S0&!S1	0.0100	Z(HL)	0.0010	0.5145
I0	I1&I2&!I3&!S0&!S1	0.0100	Z(HL)	0.0010	0.5145
I0	I1&I2&I3&!S0&!S1	0.0100	Z(HL)	0.0010	0.5145
S0	!I0&!I1&I2&!I3&S1	0.0100	Z(LH)	0.0010	0.5238
S0	!I0&I1&I2&!I3&S1	0.0100	Z(LH)	0.0010	0.6242
S0	I0&!I1&!I2&!I3&!S1	0.0100	Z(LH)	0.0010	0.5154
S0	I0&!I1&!I2&I3&!S1	0.0100	Z(LH)	0.0010	0.6364
S0	I0&!I1&I2&!I3&!S1	0.0100	Z(LH)	0.0010	0.6100
S0	I0&!I1&I2&!I3&S1	0.0100	Z(LH)	0.0010	0.5974
S0	I0&!I1&I2&I3&!S1	0.0100	Z(LH)	0.0010	0.5079
S0	I0&I1&I2&!I3&S1	0.0100	Z(LH)	0.0010	0.5197
S0	!I0&!I1&!I2&I3&S1	0.0100	Z(LH)	0.0010	0.2401
S0	!I0&I1&!I2&!I3&!S1	0.0100	Z(LH)	0.0010	0.2457
S0	!I0&I1&!I2&I3&!S1	0.0100	Z(LH)	0.0010	0.2751
S0	!I0&I1&!I2&I3&S1	0.0100	Z(LH)	0.0010	0.2620
S0	!I0&I1&I2&!I3&!S1	0.0100	Z(LH)	0.0010	0.4360
S0	!I0&I1&I2&I3&!S1	0.0100	Z(LH)	0.0010	0.2458
S0	I0&!I1&!I2&I3&S1	0.0100	Z(LH)	0.0010	0.4040
S0	I0&I1&!I2&I3&S1	0.0100	Z(LH)	0.0010	0.2402
I2	!I0&!I1&!I3&!S0&S1	0.0100	Z(LH)	0.0010	0.2783
I2	!I0&!I1&I3&!S0&S1	0.0100	Z(LH)	0.0010	0.2783
I2	!I0&I1&!I3&!S0&S1	0.0100	Z(LH)	0.0010	0.2783
I2	!I0&I1&I3&!S0&S1	0.0100	Z(LH)	0.0010	0.2783
I2	I0&!I1&!I3&!S0&S1	0.0100	Z(LH)	0.0010	0.2783
I2	I0&!I1&I3&!S0&S1	0.0100	Z(LH)	0.0010	0.2783
I2	I0&I1&!I3&!S0&S1	0.0100	Z(LH)	0.0010	0.2782
I2	I0&I1&I3&!S0&S1	0.0100	Z(LH)	0.0010	0.2783
S0	!I0&!I1&!I2&I3&S1	0.0100	Z(HL)	0.0010	0.6762
S0	!I0&I1&!I2&!I3&!S1	0.0100	Z(HL)	0.0010	0.6606
S0	!I0&I1&!I2&I3&!S1	0.0100	Z(HL)	0.0010	0.7842

continues on next page

Table 59 – continued from previous page

S0	!I0&I1&!I2&I3&S1	0.0100	Z(HL)	0.0010	0.7796
S0	!I0&I1&I2&!I3&!S1	0.0100	Z(HL)	0.0010	0.7495
S0	!I0&I1&I2&I3&!S1	0.0100	Z(HL)	0.0010	0.6544
S0	I0&!I1&!I2&I3&S1	0.0100	Z(HL)	0.0010	0.7433
S0	I0&I1&!I2&I3&S1	0.0100	Z(HL)	0.0010	0.6732
S0	!I0&!I1&I2&!I3&S1	0.0100	Z(HL)	0.0010	0.5191
S0	!I0&I1&I2&!I3&S1	0.0100	Z(HL)	0.0010	0.5374
S0	I0&!I1&!I2&!I3&!S1	0.0100	Z(HL)	0.0010	0.4990
S0	I0&!I1&!I2&I3&!S1	0.0100	Z(HL)	0.0010	0.5240
S0	I0&!I1&I2&!I3&!S1	0.0100	Z(HL)	0.0010	0.6930
S0	I0&!I1&I2&!I3&S1	0.0100	Z(HL)	0.0010	0.6876
S0	I0&!I1&I2&I3&!S1	0.0100	Z(HL)	0.0010	0.4982
S0	I0&I1&I2&!I3&S1	0.0100	Z(HL)	0.0010	0.5189
I1	!I0&!I2&!I3&S0&!S1	0.0100	Z(HL)	0.0010	0.5207
I1	!I0&!I2&I3&S0&!S1	0.0100	Z(HL)	0.0010	0.5207
I1	!I0&I2&!I3&S0&!S1	0.0100	Z(HL)	0.0010	0.5207
I1	!I0&I2&I3&S0&!S1	0.0100	Z(HL)	0.0010	0.5207
I1	I0&!I2&!I3&S0&!S1	0.0100	Z(HL)	0.0010	0.5207
I1	I0&!I2&I3&S0&!S1	0.0100	Z(HL)	0.0010	0.5207
I1	I0&I2&!I3&S0&!S1	0.0100	Z(HL)	0.0010	0.5207
I1	I0&I2&I3&S0&!S1	0.0100	Z(HL)	0.0010	0.5207
I3(HL)	!I0&!I1&!I2&!S0&!S1	0.0100	n/a	n/a	0.0684
I3(HL)	!I0&!I1&!I2&!S0&S1	0.0100	n/a	n/a	0.0684
I3(HL)	!I0&!I1&!I2&S0&!S1	0.0100	n/a	n/a	0.2213
I3(HL)	!I0&!I1&I2&!S0&!S1	0.0100	n/a	n/a	0.0684
I3(HL)	!I0&!I1&I2&S0&!S1	0.0100	n/a	n/a	0.2213
I3(HL)	!I0&I1&!I2&!S0&!S1	0.0100	n/a	n/a	0.0684
I3(HL)	!I0&I1&!I2&!S0&S1	0.0100	n/a	n/a	0.0684
I3(HL)	!I0&I1&I2&!S0&!S1	0.0100	n/a	n/a	0.0684
I3(HL)	I0&!I1&!I2&!S0&S1	0.0100	n/a	n/a	0.0684
I3(HL)	I0&!I1&!I2&S0&!S1	0.0100	n/a	n/a	0.2213
I3(HL)	I0&!I1&I2&S0&!S1	0.0100	n/a	n/a	0.2212
I3(HL)	I0&I1&!I2&!S0&S1	0.0100	n/a	n/a	0.0684
I3(HL)	!I0&!I1&I2&!S0&S1	0.0100	n/a	n/a	0.0684
I3(HL)	!I0&I1&!I2&S0&!S1	0.0100	n/a	n/a	0.2213
I3(HL)	!I0&I1&I2&!S0&S1	0.0100	n/a	n/a	0.0684
I3(HL)	!I0&I1&I2&S0&!S1	0.0100	n/a	n/a	0.2213
I3(HL)	I0&!I1&!I2&!S0&!S1	0.0100	n/a	n/a	0.0684
I3(HL)	I0&!I1&I2&!S0&!S1	0.0100	n/a	n/a	0.0684
I3(HL)	I0&!I1&I2&!S0&S1	0.0100	n/a	n/a	0.0684
I3(HL)	I0&I1&!I2&!S0&!S1	0.0100	n/a	n/a	0.0684
I3(HL)	I0&I1&!I2&S0&!S1	0.0100	n/a	n/a	0.2213
I3(HL)	I0&I1&I2&!S0&!S1	0.0100	n/a	n/a	0.0684
I3(HL)	I0&I1&I2&!S0&S1	0.0100	n/a	n/a	0.0684
I3(HL)	I0&I1&I2&S0&!S1	0.0100	n/a	n/a	0.2213
I2(LH)	!I0&!I1&!I3&!S0&!S1	0.0100	n/a	n/a	0.0667
I2(LH)	!I0&!I1&!I3&S0&!S1	0.0100	n/a	n/a	0.0117
I2(LH)	!I0&!I1&!I3&S0&S1	0.0100	n/a	n/a	0.0117
I2(LH)	!I0&!I1&I3&!S0&!S1	0.0100	n/a	n/a	0.0667
I2(LH)	!I0&!I1&I3&S0&!S1	0.0100	n/a	n/a	0.0118
I2(LH)	!I0&I1&!I3&!S0&!S1	0.0100	n/a	n/a	0.0667
I2(LH)	!I0&I1&!I3&S0&S1	0.0100	n/a	n/a	0.0118

continues on next page

Table 59 – continued from previous page

I2(LH)	!I0&I1&I3&!S0&!S1	0.0100	n/a	n/a	0.0667
I2(LH)	I0&!I1&!I3&S0&!S1	0.0100	n/a	n/a	0.0117
I2(LH)	I0&!I1&!I3&S0&S1	0.0100	n/a	n/a	0.0117
I2(LH)	I0&!I1&I3&S0&!S1	0.0100	n/a	n/a	0.0118
I2(LH)	I0&I1&!I3&S0&S1	0.0100	n/a	n/a	0.0117
I2(LH)	!I0&!I1&I3&S0&S1	0.0100	n/a	n/a	0.0117
I2(LH)	!I0&I1&!I3&S0&!S1	0.0100	n/a	n/a	0.0117
I2(LH)	!I0&I1&I3&S0&!S1	0.0100	n/a	n/a	0.0117
I2(LH)	!I0&I1&I3&S0&S1	0.0100	n/a	n/a	0.0117
I2(LH)	I0&!I1&!I3&!S0&!S1	0.0100	n/a	n/a	0.0667
I2(LH)	I0&!I1&I3&!S0&!S1	0.0100	n/a	n/a	0.0667
I2(LH)	I0&!I1&I3&S0&S1	0.0100	n/a	n/a	0.0117
I2(LH)	I0&I1&!I3&!S0&!S1	0.0100	n/a	n/a	0.0667
I2(LH)	I0&I1&!I3&S0&!S1	0.0100	n/a	n/a	0.0117
I2(LH)	I0&I1&I3&!S0&!S1	0.0100	n/a	n/a	0.0666
I2(LH)	I0&I1&I3&S0&!S1	0.0100	n/a	n/a	0.0117
I2(LH)	I0&I1&I3&S0&S1	0.0100	n/a	n/a	0.0117
I1(LH)	!I0&!I2&!I3&!S0&!S1	0.0100	n/a	n/a	0.0052
I1(LH)	!I0&!I2&!I3&!S0&S1	0.0100	n/a	n/a	0.0053
I1(LH)	!I0&!I2&!I3&S0&S1	0.0100	n/a	n/a	0.0321
I1(LH)	!I0&!I2&I3&!S0&!S1	0.0100	n/a	n/a	0.0052
I1(LH)	!I0&!I2&I3&!S0&S1	0.0100	n/a	n/a	0.0053
I1(LH)	!I0&I2&!I3&!S0&!S1	0.0100	n/a	n/a	0.0052
I1(LH)	!I0&I2&!I3&S0&S1	0.0100	n/a	n/a	0.0321
I1(LH)	!I0&I2&I3&!S0&!S1	0.0100	n/a	n/a	0.0052
I1(LH)	I0&!I2&!I3&!S0&S1	0.0100	n/a	n/a	0.0053
I1(LH)	I0&!I2&!I3&S0&S1	0.0100	n/a	n/a	0.0321
I1(LH)	I0&!I2&I3&!S0&S1	0.0100	n/a	n/a	0.0053
I1(LH)	I0&I2&!I3&S0&S1	0.0100	n/a	n/a	0.0321
I1(LH)	!I0&!I2&I3&S0&S1	0.0100	n/a	n/a	0.0321
I1(LH)	!I0&I2&!I3&!S0&S1	0.0100	n/a	n/a	0.0053
I1(LH)	!I0&I2&I3&!S0&S1	0.0100	n/a	n/a	0.0053
I1(LH)	!I0&I2&I3&S0&S1	0.0100	n/a	n/a	0.0321
I1(LH)	I0&!I2&!I3&!S0&!S1	0.0100	n/a	n/a	0.0052
I1(LH)	I0&!I2&I3&!S0&!S1	0.0100	n/a	n/a	0.0052
I1(LH)	I0&!I2&I3&S0&S1	0.0100	n/a	n/a	0.0321
I1(LH)	I0&I2&!I3&!S0&!S1	0.0100	n/a	n/a	0.0052
I1(LH)	I0&I2&!I3&!S0&S1	0.0100	n/a	n/a	0.0053
I1(LH)	I0&I2&I3&!S0&!S1	0.0100	n/a	n/a	0.0052
I1(LH)	I0&I2&I3&!S0&S1	0.0100	n/a	n/a	0.0053
I1(LH)	I0&I2&I3&S0&S1	0.0100	n/a	n/a	0.0321
S0(HL)	!I0&!I1&!I2&!I3&!S1	0.0100	n/a	n/a	0.2179
S0(HL)	!I0&!I1&!I2&!I3&S1	0.0100	n/a	n/a	0.2179
S0(HL)	!I0&!I1&!I2&I3&!S1	0.0100	n/a	n/a	0.3439
S0(HL)	!I0&!I1&I2&!I3&!S1	0.0100	n/a	n/a	0.3080
S0(HL)	!I0&!I1&I2&I3&!S1	0.0100	n/a	n/a	0.2122
S0(HL)	!I0&I1&!I2&!I3&S1	0.0100	n/a	n/a	0.3231
S0(HL)	I0&!I1&!I2&!I3&S1	0.0100	n/a	n/a	0.2866
S0(HL)	I0&I1&!I2&!I3&S1	0.0100	n/a	n/a	0.2152
S0(HL)	!I0&!I1&I2&I3&S1	0.0100	n/a	n/a	0.2123
S0(HL)	!I0&I1&I2&I3&S1	0.0100	n/a	n/a	0.3175
S0(HL)	I0&!I1&I2&I3&S1	0.0100	n/a	n/a	0.2795

continues on next page

Table 59 – continued from previous page

S0(HL)	I0&I1&!I2&!I3&!S1	0.0100	n/a	n/a	0.2152
S0(HL)	I0&I1&!I2&I3&!S1	0.0100	n/a	n/a	0.3414
S0(HL)	I0&I1&I2&!I3&!S1	0.0100	n/a	n/a	0.3041
S0(HL)	I0&I1&I2&I3&!S1	0.0100	n/a	n/a	0.2098
S0(HL)	I0&I1&I2&I3&S1	0.0100	n/a	n/a	0.2097
I1(HL)	!I0&!I2&!I3&!S0&!S1	0.0100	n/a	n/a	0.0579
I1(HL)	!I0&!I2&!I3&!S0&S1	0.0100	n/a	n/a	0.0579
I1(HL)	!I0&!I2&!I3&S0&S1	0.0100	n/a	n/a	0.1856
I1(HL)	!I0&!I2&I3&!S0&!S1	0.0100	n/a	n/a	0.0579
I1(HL)	!I0&!I2&I3&!S0&S1	0.0100	n/a	n/a	0.0579
I1(HL)	!I0&I2&!I3&!S0&!S1	0.0100	n/a	n/a	0.0579
I1(HL)	!I0&I2&!I3&S0&S1	0.0100	n/a	n/a	0.1857
I1(HL)	!I0&I2&I3&!S0&!S1	0.0100	n/a	n/a	0.0579
I1(HL)	I0&!I2&!I3&!S0&S1	0.0100	n/a	n/a	0.0579
I1(HL)	I0&!I2&!I3&S0&S1	0.0100	n/a	n/a	0.1857
I1(HL)	I0&!I2&I3&!S0&S1	0.0100	n/a	n/a	0.0579
I1(HL)	I0&I2&!I3&S0&S1	0.0100	n/a	n/a	0.1857
I1(HL)	!I0&!I2&I3&S0&S1	0.0100	n/a	n/a	0.1857
I1(HL)	!I0&I2&!I3&!S0&S1	0.0100	n/a	n/a	0.0579
I1(HL)	!I0&I2&I3&!S0&S1	0.0100	n/a	n/a	0.0579
I1(HL)	!I0&I2&I3&S0&S1	0.0100	n/a	n/a	0.1857
I1(HL)	I0&!I2&!I3&!S0&!S1	0.0100	n/a	n/a	0.0579
I1(HL)	I0&!I2&I3&!S0&!S1	0.0100	n/a	n/a	0.0579
I1(HL)	I0&!I2&I3&S0&S1	0.0100	n/a	n/a	0.1857
I1(HL)	I0&I2&!I3&!S0&!S1	0.0100	n/a	n/a	0.0579
I1(HL)	I0&I2&!I3&!S0&S1	0.0100	n/a	n/a	0.0579
I1(HL)	I0&I2&I3&!S0&!S1	0.0100	n/a	n/a	0.0579
I1(HL)	I0&I2&I3&!S0&S1	0.0100	n/a	n/a	0.0579
I1(HL)	I0&I2&I3&S0&S1	0.0100	n/a	n/a	0.1857
I3(LH)	!I0&!I1&!I2&!S0&!S1	0.0100	n/a	n/a	0.0106
I3(LH)	!I0&!I1&!I2&!S0&S1	0.0100	n/a	n/a	0.0106
I3(LH)	!I0&!I1&!I2&S0&!S1	0.0100	n/a	n/a	0.0470
I3(LH)	!I0&!I1&I2&!S0&!S1	0.0100	n/a	n/a	0.0106
I3(LH)	!I0&!I1&I2&S0&!S1	0.0100	n/a	n/a	0.0470
I3(LH)	!I0&I1&!I2&!S0&!S1	0.0100	n/a	n/a	0.0106
I3(LH)	!I0&I1&!I2&!S0&S1	0.0100	n/a	n/a	0.0107
I3(LH)	!I0&I1&I2&!S0&!S1	0.0100	n/a	n/a	0.0107
I3(LH)	I0&!I1&!I2&!S0&S1	0.0100	n/a	n/a	0.0107
I3(LH)	I0&!I1&!I2&S0&!S1	0.0100	n/a	n/a	0.0470
I3(LH)	I0&!I1&I2&S0&!S1	0.0100	n/a	n/a	0.0470
I3(LH)	I0&I1&!I2&!S0&S1	0.0100	n/a	n/a	0.0106
I3(LH)	!I0&!I1&I2&!S0&S1	0.0100	n/a	n/a	0.0106
I3(LH)	!I0&I1&!I2&S0&!S1	0.0100	n/a	n/a	0.0470
I3(LH)	!I0&I1&I2&!S0&S1	0.0100	n/a	n/a	0.0107
I3(LH)	!I0&I1&I2&S0&!S1	0.0100	n/a	n/a	0.0470
I3(LH)	I0&!I1&!I2&!S0&!S1	0.0100	n/a	n/a	0.0106
I3(LH)	I0&!I1&I2&!S0&!S1	0.0100	n/a	n/a	0.0107
I3(LH)	I0&!I1&I2&!S0&S1	0.0100	n/a	n/a	0.0106
I3(LH)	I0&I1&!I2&!S0&!S1	0.0100	n/a	n/a	0.0106
I3(LH)	I0&I1&!I2&S0&!S1	0.0100	n/a	n/a	0.0470
I3(LH)	I0&I1&I2&!S0&!S1	0.0100	n/a	n/a	0.0107
I3(LH)	I0&I1&I2&!S0&S1	0.0100	n/a	n/a	0.0107

continues on next page

Table 59 – continued from previous page

I3(LH)	I0&I1&I2&S0&!S1	0.0100	n/a	n/a	0.0470
I0(HL)	!I1&!I2&!I3&!S0&S1	0.0100	n/a	n/a	0.1781
I0(HL)	!I1&!I2&!I3&S0&!S1	0.0100	n/a	n/a	0.0672
I0(HL)	!I1&!I2&!I3&S0&S1	0.0100	n/a	n/a	0.0672
I0(HL)	!I1&!I2&I3&!S0&S1	0.0100	n/a	n/a	0.1781
I0(HL)	!I1&!I2&I3&S0&!S1	0.0100	n/a	n/a	0.0672
I0(HL)	!I1&I2&!I3&S0&!S1	0.0100	n/a	n/a	0.0672
I0(HL)	!I1&I2&!I3&S0&S1	0.0100	n/a	n/a	0.0672
I0(HL)	!I1&I2&I3&S0&!S1	0.0100	n/a	n/a	0.0672
I0(HL)	I1&!I2&!I3&!S0&S1	0.0100	n/a	n/a	0.1781
I0(HL)	I1&!I2&!I3&S0&S1	0.0100	n/a	n/a	0.0672
I0(HL)	I1&!I2&I3&!S0&S1	0.0100	n/a	n/a	0.1781
I0(HL)	I1&I2&!I3&S0&S1	0.0100	n/a	n/a	0.0672
I0(HL)	!I1&!I2&I3&S0&S1	0.0100	n/a	n/a	0.0672
I0(HL)	!I1&I2&!I3&!S0&S1	0.0100	n/a	n/a	0.1781
I0(HL)	!I1&I2&I3&!S0&S1	0.0100	n/a	n/a	0.1781
I0(HL)	!I1&I2&I3&S0&S1	0.0100	n/a	n/a	0.0672
I0(HL)	I1&!I2&!I3&S0&!S1	0.0100	n/a	n/a	0.0672
I0(HL)	I1&!I2&I3&S0&!S1	0.0100	n/a	n/a	0.0672
I0(HL)	I1&!I2&I3&S0&S1	0.0100	n/a	n/a	0.0672
I0(HL)	I1&I2&!I3&!S0&S1	0.0100	n/a	n/a	0.1781
I0(HL)	I1&I2&!I3&S0&!S1	0.0100	n/a	n/a	0.0672
I0(HL)	I1&I2&I3&!S0&S1	0.0100	n/a	n/a	0.1781
I0(HL)	I1&I2&I3&S0&!S1	0.0100	n/a	n/a	0.0672
I0(HL)	I1&I2&I3&S0&S1	0.0100	n/a	n/a	0.0672
S1(HL)	!I0&!I1&!I2&!I3&!S0	0.0100	n/a	n/a	0.1130
S1(HL)	!I0&!I1&!I2&!I3&S0	0.0100	n/a	n/a	0.1130
S1(HL)	!I0&!I1&!I2&I3&!S0	0.0100	n/a	n/a	0.1130
S1(HL)	!I0&!I1&I2&!I3&S0	0.0100	n/a	n/a	0.1130
S1(HL)	!I0&I1&!I2&!I3&!S0	0.0100	n/a	n/a	0.1130
S1(HL)	!I0&I1&!I2&I3&!S0	0.0100	n/a	n/a	0.1130
S1(HL)	I0&!I1&!I2&!I3&S0	0.0100	n/a	n/a	0.1130
S1(HL)	I0&!I1&I2&!I3&S0	0.0100	n/a	n/a	0.1130
S1(HL)	!I0&I1&!I2&I3&S0	0.0100	n/a	n/a	0.1106
S1(HL)	!I0&I1&I2&I3&S0	0.0100	n/a	n/a	0.1106
S1(HL)	I0&!I1&I2&!I3&!S0	0.0100	n/a	n/a	0.1106
S1(HL)	I0&!I1&I2&I3&!S0	0.0100	n/a	n/a	0.1106
S1(HL)	I0&I1&!I2&I3&S0	0.0100	n/a	n/a	0.1106
S1(HL)	I0&I1&I2&!I3&!S0	0.0100	n/a	n/a	0.1106
S1(HL)	I0&I1&I2&I3&!S0	0.0100	n/a	n/a	0.1106
S1(HL)	I0&I1&I2&I3&S0	0.0100	n/a	n/a	0.1106
I0(LH)	!I1&!I2&!I3&!S0&S1	0.0100	n/a	n/a	0.0497
I0(LH)	!I1&!I2&!I3&S0&!S1	0.0100	n/a	n/a	0.0063
I0(LH)	!I1&!I2&!I3&S0&S1	0.0100	n/a	n/a	0.0063
I0(LH)	!I1&!I2&I3&!S0&S1	0.0100	n/a	n/a	0.0497
I0(LH)	!I1&!I2&I3&S0&!S1	0.0100	n/a	n/a	0.0063
I0(LH)	!I1&I2&!I3&S0&!S1	0.0100	n/a	n/a	0.0063
I0(LH)	!I1&I2&!I3&S0&S1	0.0100	n/a	n/a	0.0062
I0(LH)	!I1&I2&I3&S0&!S1	0.0100	n/a	n/a	0.0063
I0(LH)	I1&!I2&!I3&!S0&S1	0.0100	n/a	n/a	0.0497
I0(LH)	I1&!I2&!I3&S0&S1	0.0100	n/a	n/a	0.0063
I0(LH)	I1&!I2&I3&!S0&S1	0.0100	n/a	n/a	0.0497

continues on next page

Table 59 – continued from previous page

I0(LH)	I1&I2&!I3&S0&S1	0.0100	n/a	n/a	0.0063
I0(LH)	!I1&!I2&I3&S0&S1	0.0100	n/a	n/a	0.0063
I0(LH)	!I1&I2&!I3&!S0&S1	0.0100	n/a	n/a	0.0497
I0(LH)	!I1&I2&I3&!S0&S1	0.0100	n/a	n/a	0.0497
I0(LH)	!I1&I2&I3&S0&S1	0.0100	n/a	n/a	0.0063
I0(LH)	I1&!I2&!I3&S0&!S1	0.0100	n/a	n/a	0.0063
I0(LH)	I1&!I2&I3&S0&!S1	0.0100	n/a	n/a	0.0062
I0(LH)	I1&!I2&I3&S0&S1	0.0100	n/a	n/a	0.0062
I0(LH)	I1&I2&!I3&!S0&S1	0.0100	n/a	n/a	0.0497
I0(LH)	I1&I2&!I3&S0&!S1	0.0100	n/a	n/a	0.0063
I0(LH)	I1&I2&I3&!S0&S1	0.0100	n/a	n/a	0.0497
I0(LH)	I1&I2&I3&S0&!S1	0.0100	n/a	n/a	0.0063
I0(LH)	I1&I2&I3&S0&S1	0.0100	n/a	n/a	0.0063
S0(LH)	!I0&!I1&!I2&!I3&!S1	0.0100	n/a	n/a	0.0014
S0(LH)	!I0&!I1&!I2&!I3&S1	0.0100	n/a	n/a	0.0014
S0(LH)	!I0&!I1&!I2&I3&!S1	0.0100	n/a	n/a	0.0306
S0(LH)	!I0&!I1&I2&!I3&!S1	0.0100	n/a	n/a	0.1944
S0(LH)	!I0&!I1&I2&I3&!S1	0.0100	n/a	n/a	0.0014
S0(LH)	!I0&I1&!I2&!I3&S1	0.0100	n/a	n/a	0.0232
S0(LH)	I0&!I1&!I2&!I3&S1	0.0100	n/a	n/a	0.1685
S0(LH)	I0&I1&!I2&!I3&S1	0.0100	n/a	n/a	0.0015
S0(LH)	!I0&!I1&I2&I3&S1	0.0100	n/a	n/a	0.0014
S0(LH)	!I0&I1&I2&I3&S1	0.0100	n/a	n/a	0.0232
S0(LH)	I0&!I1&I2&I3&S1	0.0100	n/a	n/a	0.1680
S0(LH)	I0&I1&!I2&!I3&!S1	0.0100	n/a	n/a	0.0014
S0(LH)	I0&I1&!I2&I3&!S1	0.0100	n/a	n/a	0.0306
S0(LH)	I0&I1&I2&!I3&!S1	0.0100	n/a	n/a	0.1943
S0(LH)	I0&I1&I2&I3&!S1	0.0100	n/a	n/a	0.0014
S0(LH)	I0&I1&I2&I3&S1	0.0100	n/a	n/a	0.0014
I2(HL)	!I0&!I1&!I3&!S0&!S1	0.0100	n/a	n/a	0.2048
I2(HL)	!I0&!I1&!I3&S0&!S1	0.0100	n/a	n/a	0.0706
I2(HL)	!I0&!I1&!I3&S0&S1	0.0100	n/a	n/a	0.0706
I2(HL)	!I0&!I1&I3&!S0&!S1	0.0100	n/a	n/a	0.2048
I2(HL)	!I0&!I1&I3&S0&!S1	0.0100	n/a	n/a	0.0706
I2(HL)	!I0&I1&!I3&!S0&!S1	0.0100	n/a	n/a	0.2048
I2(HL)	!I0&I1&!I3&S0&S1	0.0100	n/a	n/a	0.0706
I2(HL)	!I0&I1&I3&!S0&!S1	0.0100	n/a	n/a	0.2048
I2(HL)	I0&!I1&!I3&S0&!S1	0.0100	n/a	n/a	0.0706
I2(HL)	I0&!I1&!I3&S0&S1	0.0100	n/a	n/a	0.0706
I2(HL)	I0&!I1&I3&S0&!S1	0.0100	n/a	n/a	0.0706
I2(HL)	I0&I1&!I3&S0&S1	0.0100	n/a	n/a	0.0706
I2(HL)	!I0&!I1&I3&S0&S1	0.0100	n/a	n/a	0.0706
I2(HL)	!I0&I1&!I3&S0&!S1	0.0100	n/a	n/a	0.0706
I2(HL)	!I0&I1&I3&S0&!S1	0.0100	n/a	n/a	0.0706
I2(HL)	!I0&I1&I3&S0&S1	0.0100	n/a	n/a	0.0706
I2(HL)	I0&!I1&!I3&!S0&!S1	0.0100	n/a	n/a	0.2048
I2(HL)	I0&!I1&I3&!S0&!S1	0.0100	n/a	n/a	0.2048
I2(HL)	I0&!I1&I3&S0&S1	0.0100	n/a	n/a	0.0706
I2(HL)	I0&I1&!I3&!S0&!S1	0.0100	n/a	n/a	0.2048
I2(HL)	I0&I1&!I3&S0&!S1	0.0100	n/a	n/a	0.0706
I2(HL)	I0&I1&I3&!S0&!S1	0.0100	n/a	n/a	0.2048
I2(HL)	I0&I1&I3&S0&!S1	0.0100	n/a	n/a	0.0706

continues on next page

Table 59 – continued from previous page

I2(HL)	I0&I1&I3&S0&S1	0.0100	n/a	n/a	0.0706
S1(LH)	!I0&!I1&!I2&!I3&!S0	0.0100	n/a	n/a	0.0012
S1(LH)	!I0&!I1&!I2&!I3&S0	0.0100	n/a	n/a	0.0012
S1(LH)	!I0&!I1&!I2&I3&!S0	0.0100	n/a	n/a	0.0012
S1(LH)	!I0&!I1&I2&!I3&S0	0.0100	n/a	n/a	0.0012
S1(LH)	!I0&I1&!I2&!I3&!S0	0.0100	n/a	n/a	0.0012
S1(LH)	!I0&I1&!I2&I3&!S0	0.0100	n/a	n/a	0.0012
S1(LH)	I0&!I1&!I2&!I3&S0	0.0100	n/a	n/a	0.0012
S1(LH)	I0&!I1&I2&!I3&S0	0.0100	n/a	n/a	0.0012
S1(LH)	!I0&I1&!I2&I3&S0	0.0100	n/a	n/a	0.0012
S1(LH)	!I0&I1&I2&I3&S0	0.0100	n/a	n/a	0.0012
S1(LH)	I0&!I1&I2&!I3&!S0	0.0100	n/a	n/a	0.0012
S1(LH)	I0&!I1&I2&I3&!S0	0.0100	n/a	n/a	0.0012
S1(LH)	I0&I1&!I2&I3&S0	0.0100	n/a	n/a	0.0012
S1(LH)	I0&I1&I2&!I3&!S0	0.0100	n/a	n/a	0.0012
S1(LH)	I0&I1&I2&I3&!S0	0.0100	n/a	n/a	0.0012
S1(LH)	I0&I1&I2&I3&S0	0.0100	n/a	n/a	0.0012

LEAKAGE POWER

When Condition	Power (nW)
!I0&!I1&!I2&!I3&!S0&!S1	0.5655
!I0&!I1&!I2&!I3&!S0&S1	0.5642
!I0&!I1&!I2&!I3&S0&!S1	0.5642
!I0&!I1&!I2&!I3&S0&S1	0.5630
!I0&!I1&!I2&I3&!S0&!S1	0.5679
!I0&!I1&!I2&I3&!S0&S1	0.5667
!I0&!I1&!I2&I3&S0&!S1	0.5702
!I0&!I1&I2&!I3&!S0&!S1	0.5714
!I0&!I1&I2&!I3&S0&!S1	0.5667
!I0&!I1&I2&!I3&S0&S1	0.5654
!I0&!I1&I2&I3&!S0&!S1	0.5702
!I0&!I1&I2&I3&S0&!S1	0.5689
!I0&I1&!I2&!I3&!S0&!S1	0.5677
!I0&I1&!I2&!I3&!S0&S1	0.5665
!I0&I1&!I2&!I3&S0&S1	0.5687
!I0&I1&!I2&I3&!S0&!S1	0.5702
!I0&I1&!I2&I3&!S0&S1	0.5689
!I0&I1&I2&!I3&!S0&!S1	0.5736
!I0&I1&I2&!I3&S0&S1	0.5712
!I0&I1&I2&I3&!S0&!S1	0.5725
I0&!I1&!I2&!I3&!S0&S1	0.5699
I0&!I1&!I2&!I3&S0&!S1	0.5665
I0&!I1&!I2&!I3&S0&S1	0.5652
I0&!I1&!I2&I3&!S0&S1	0.5723
I0&!I1&!I2&I3&S0&!S1	0.5723
I0&!I1&I2&!I3&S0&!S1	0.5689

continues on next page

Table 60 – continued from previous page

I0&!I1&I2&!I3&S0&S1	0.5676
I0&!I1&I2&I3&S0&!S1	0.5712
I0&I1&!I2&!I3&!S0&S1	0.5675
I0&I1&!I2&!I3&S0&S1	0.5662
I0&I1&!I2&I3&!S0&S1	0.5699
I0&I1&I2&!I3&S0&S1	0.5686
!I0&!I1&!I2&I3&S0&S1	0.5701
!I0&!I1&I2&!I3&!S0&S1	0.5713
!I0&!I1&I2&I3&!S0&S1	0.5702
!I0&!I1&I2&I3&S0&S1	0.5689
!I0&I1&!I2&!I3&S0&!S1	0.5711
!I0&I1&!I2&I3&S0&!S1	0.5723
!I0&I1&!I2&I3&S0&S1	0.5710
!I0&I1&I2&!I3&!S0&S1	0.5735
!I0&I1&I2&!I3&S0&!S1	0.5735
!I0&I1&I2&I3&!S0&S1	0.5723
!I0&I1&I2&I3&S0&!S1	0.5711
!I0&I1&I2&I3&S0&S1	0.5699
I0&!I1&!I2&!I3&!S0&!S1	0.5723
I0&!I1&!I2&I3&!S0&!S1	0.5748
I0&!I1&!I2&I3&S0&S1	0.5723
I0&!I1&I2&!I3&!S0&!S1	0.5735
I0&!I1&I2&!I3&!S0&S1	0.5723
I0&!I1&I2&I3&!S0&!S1	0.5723
I0&!I1&I2&I3&!S0&S1	0.5711
I0&!I1&I2&I3&S0&S1	0.5712
I0&I1&!I2&!I3&!S0&!S1	0.5698
I0&I1&!I2&!I3&S0&!S1	0.5686
I0&I1&!I2&I3&!S0&!S1	0.5723
I0&I1&!I2&I3&S0&!S1	0.5698
I0&I1&!I2&I3&S0&S1	0.5686
I0&I1&I2&!I3&!S0&!S1	0.5710
I0&I1&I2&!I3&!S0&S1	0.5698
I0&I1&I2&!I3&S0&!S1	0.5710
I0&I1&I2&I3&!S0&!S1	0.5699
I0&I1&I2&I3&!S0&S1	0.5686
I0&I1&I2&I3&S0&!S1	0.5686
I0&I1&I2&I3&S0&S1	0.5674

gf180mcu_fd_sc_mcu7t5v0__mux4_4

gf180mcu_fd_sc_mcu7t5v0__mux4_4 symbol

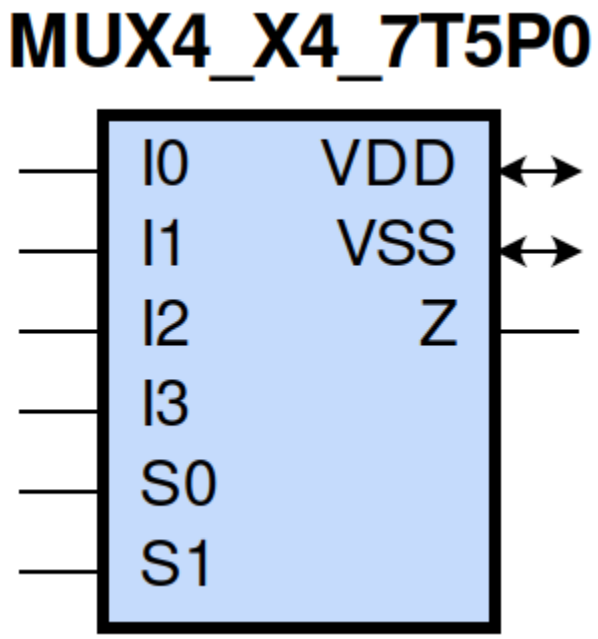

gf180mcu_fd_sc_mcu7t5v0__mux4_4 schematic

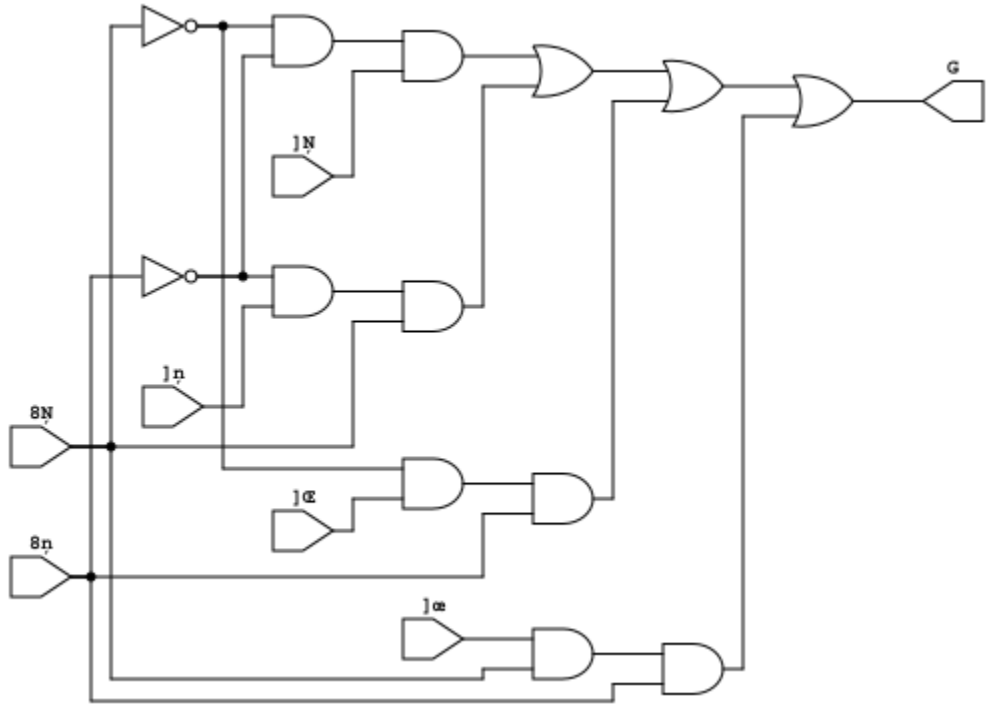

gf180mcu_fd_sc_mcu7t5v0__mux4_4 layout

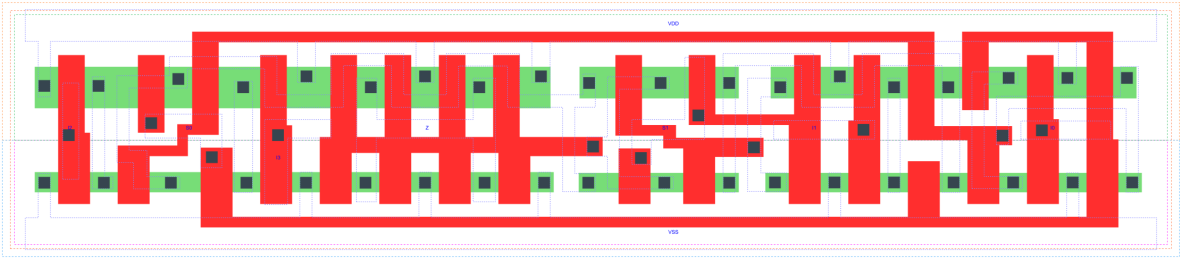

MUX4_X4 is a 4-to-1 multiplexer, 4X drive strength | | Attributes

Attribute	Value
area	83.417600 μm^2

OUTPUT FUNCTIONS

Output Pin	Function
Z	((I0&(!S0)&(!S1))|(I1&S0&(!S1))|(I2&(!S0)&S1)|(I3&S0&S1))

TRUTH TABLE FOR Z

I0	I1	I2	I3	S0	S1	Z
1	?	?	?	0	0	1
?	1	?	?	1	0	1
?	?	1	?	0	1	1
?	?	?	1	1	1	1
0	?	?	?	0	0	0
?	0	?	?	1	0	0
?	?	0	?	0	1	0
?	?	?	0	1	1	0

FUNCTIONAL SCHEMATIC

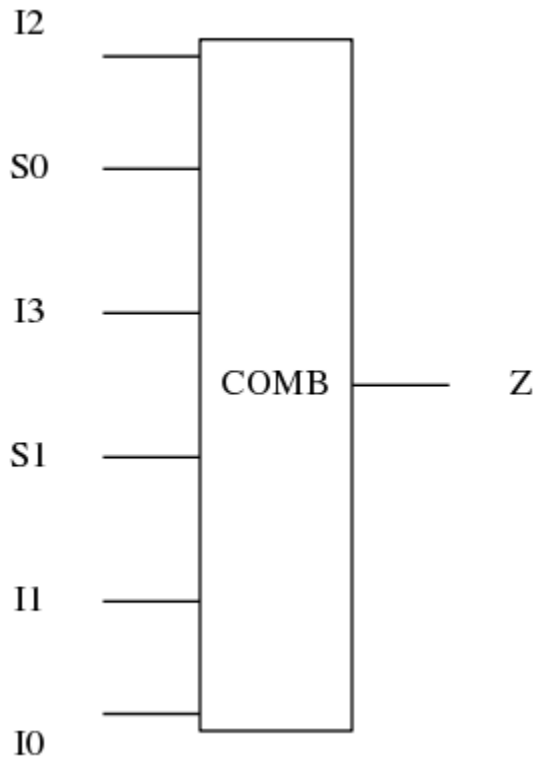

PIN CAPACITANCE (pf)

Pin	Type	Capacitance (pf)
I2	input	0.0031
S0	input	0.0110
I3	input	0.0034
S1	input	0.0058
I1	input	0.0029
I0	input	0.0028

DELAY AND OUTPUT TRANSITION TIME corresponding to min slew and load

Input Pin	Output	When Condition	Tin (ns)	Out Load (pf)	Delay (ns)	Tout (ns)
I2(HL)	Z(HL)	!I0&!I1&!I3&!S0&S1	0.0100	0.0010	0.5595	0.0964
I2(HL)	Z(HL)	!I0&!I1&I3&!S0&S1	0.0100	0.0010	0.5597	0.0965
I2(HL)	Z(HL)	!I0&I1&!I3&!S0&S1	0.0100	0.0010	0.5597	0.0964
I2(HL)	Z(HL)	!I0&I1&I3&!S0&S1	0.0100	0.0010	0.5597	0.0965
I2(HL)	Z(HL)	I0&!I1&!I3&!S0&S1	0.0100	0.0010	0.5595	0.0963

continues on next page

Table 61 – continued from previous page

I2(HL)	Z(HL)	I0&!I1&I3&!S0&S1	0.0100	0.0010	0.5598	0.0963
I2(HL)	Z(HL)	I0&I1&!I3&!S0&S1	0.0100	0.0010	0.5595	0.0964
I2(HL)	Z(HL)	I0&I1&I3&!S0&S1	0.0100	0.0010	0.5597	0.0965
I2(LH)	Z(LH)	!I0&!I1&!I3&!S0&S1	0.0100	0.0010	0.5966	0.0778
I2(LH)	Z(LH)	!I0&!I1&I3&!S0&S1	0.0100	0.0010	0.5966	0.0778
I2(LH)	Z(LH)	!I0&I1&!I3&!S0&S1	0.0100	0.0010	0.5966	0.0778
I2(LH)	Z(LH)	!I0&I1&I3&!S0&S1	0.0100	0.0010	0.5966	0.0778
I2(LH)	Z(LH)	I0&!I1&!I3&!S0&S1	0.0100	0.0010	0.5966	0.0778
I2(LH)	Z(LH)	I0&!I1&I3&!S0&S1	0.0100	0.0010	0.5966	0.0778
I2(LH)	Z(LH)	I0&I1&!I3&!S0&S1	0.0100	0.0010	0.5966	0.0778
I2(LH)	Z(LH)	I0&I1&I3&!S0&S1	0.0100	0.0010	0.5966	0.0778
S0(HL)	Z(LH)	!I0&!I1&I2&!I3&S1	0.0100	0.0010	0.6921	0.0784
S0(HL)	Z(LH)	!I0&I1&I2&!I3&S1	0.0100	0.0010	0.6807	0.0787
S0(HL)	Z(LH)	I0&!I1&!I2&!I3&!S1	0.0100	0.0010	0.6776	0.0771
S0(HL)	Z(LH)	I0&!I1&!I2&I3&!S1	0.0100	0.0010	0.6626	0.0770
S0(HL)	Z(LH)	I0&!I1&I2&!I3&!S1	0.0100	0.0010	0.6863	0.0773
S0(HL)	Z(LH)	I0&!I1&I2&!I3&S1	0.0100	0.0010	0.7000	0.0785
S0(HL)	Z(LH)	I0&!I1&I2&I3&!S1	0.0100	0.0010	0.6717	0.0771
S0(HL)	Z(LH)	I0&I1&I2&!I3&S1	0.0100	0.0010	0.6887	0.0784
S0(HL)	Z(HL)	!I0&!I1&!I2&I3&S1	0.0100	0.0010	0.5909	0.0969
S0(HL)	Z(HL)	!I0&I1&!I2&!I3&!S1	0.0100	0.0010	0.6342	0.1044
S0(HL)	Z(HL)	!I0&I1&!I2&I3&!S1	0.0100	0.0010	0.6235	0.1040
S0(HL)	Z(HL)	!I0&I1&!I2&I3&S1	0.0100	0.0010	0.5842	0.0967
S0(HL)	Z(HL)	!I0&I1&I2&!I3&!S1	0.0100	0.0010	0.6408	0.1044
S0(HL)	Z(HL)	!I0&I1&I2&I3&!S1	0.0100	0.0010	0.6303	0.1044
S0(HL)	Z(HL)	I0&!I1&!I2&I3&S1	0.0100	0.0010	0.5955	0.0972
S0(HL)	Z(HL)	I0&I1&!I2&I3&S1	0.0100	0.0010	0.5891	0.0969
S0(LH)	Z(LH)	!I0&!I1&!I2&I3&S1	0.0100	0.0010	0.5633	0.0777
S0(LH)	Z(LH)	!I0&I1&!I2&!I3&!S1	0.0100	0.0010	0.5356	0.0757
S0(LH)	Z(LH)	!I0&I1&!I2&I3&!S1	0.0100	0.0010	0.5349	0.0762
S0(LH)	Z(LH)	!I0&I1&!I2&I3&S1	0.0100	0.0010	0.5618	0.0773
S0(LH)	Z(LH)	!I0&I1&I2&!I3&!S1	0.0100	0.0010	0.5357	0.0758
S0(LH)	Z(LH)	!I0&I1&I2&I3&!S1	0.0100	0.0010	0.5355	0.0762
S0(LH)	Z(LH)	I0&!I1&!I2&I3&S1	0.0100	0.0010	0.5639	0.0774
S0(LH)	Z(LH)	I0&I1&!I2&I3&S1	0.0100	0.0010	0.5631	0.0773
S0(LH)	Z(HL)	!I0&!I1&I2&!I3&S1	0.0100	0.0010	0.5627	0.0966
S0(LH)	Z(HL)	!I0&I1&I2&!I3&S1	0.0100	0.0010	0.5581	0.0967
S0(LH)	Z(HL)	I0&!I1&!I2&!I3&!S1	0.0100	0.0010	0.5906	0.1040
S0(LH)	Z(HL)	I0&!I1&!I2&I3&!S1	0.0100	0.0010	0.5858	0.1040
S0(LH)	Z(HL)	I0&!I1&I2&!I3&!S1	0.0100	0.0010	0.5917	0.1043
S0(LH)	Z(HL)	I0&!I1&I2&!I3&S1	0.0100	0.0010	0.5646	0.0966
S0(LH)	Z(HL)	I0&!I1&I2&I3&!S1	0.0100	0.0010	0.5895	0.1041
S0(LH)	Z(HL)	I0&I1&I2&!I3&S1	0.0100	0.0010	0.5623	0.0966
I3(LH)	Z(LH)	!I0&!I1&!I2&S0&S1	0.0100	0.0010	0.5910	0.0778
I3(LH)	Z(LH)	!I0&!I1&I2&S0&S1	0.0100	0.0010	0.5909	0.0778
I3(LH)	Z(LH)	!I0&I1&!I2&S0&S1	0.0100	0.0010	0.5907	0.0776
I3(LH)	Z(LH)	!I0&I1&I2&S0&S1	0.0100	0.0010	0.5909	0.0778
I3(LH)	Z(LH)	I0&!I1&!I2&S0&S1	0.0100	0.0010	0.5909	0.0778
I3(LH)	Z(LH)	I0&!I1&I2&S0&S1	0.0100	0.0010	0.5909	0.0778
I3(LH)	Z(LH)	I0&I1&!I2&S0&S1	0.0100	0.0010	0.5907	0.0776
I3(LH)	Z(LH)	I0&I1&I2&S0&S1	0.0100	0.0010	0.5909	0.0778
I3(HL)	Z(HL)	!I0&!I1&!I2&S0&S1	0.0100	0.0010	0.5607	0.0963

continues on next page

Table 61 – continued from previous page

I3(HL)	Z(HL)	!I0&!I1&I2&S0&S1	0.0100	0.0010	0.5607	0.0963
I3(HL)	Z(HL)	!I0&I1&!I2&S0&S1	0.0100	0.0010	0.5607	0.0963
I3(HL)	Z(HL)	!I0&I1&I2&S0&S1	0.0100	0.0010	0.5607	0.0963
I3(HL)	Z(HL)	I0&!I1&!I2&S0&S1	0.0100	0.0010	0.5607	0.0963
I3(HL)	Z(HL)	I0&!I1&I2&S0&S1	0.0100	0.0010	0.5607	0.0963
I3(HL)	Z(HL)	I0&I1&!I2&S0&S1	0.0100	0.0010	0.5607	0.0963
I3(HL)	Z(HL)	I0&I1&I2&S0&S1	0.0100	0.0010	0.5607	0.0963
S1(LH)	Z(HL)	!I0&I1&!I2&!I3&S0	0.0100	0.0010	0.3338	0.0858
S1(LH)	Z(HL)	!I0&I1&I2&!I3&S0	0.0100	0.0010	0.3338	0.0855
S1(LH)	Z(HL)	I0&!I1&!I2&!I3&!S0	0.0100	0.0010	0.3344	0.0857
S1(LH)	Z(HL)	I0&!I1&!I2&I3&!S0	0.0100	0.0010	0.3343	0.0859
S1(LH)	Z(HL)	I0&I1&!I2&!I3&!S0	0.0100	0.0010	0.3343	0.0858
S1(LH)	Z(HL)	I0&I1&!I2&!I3&S0	0.0100	0.0010	0.3338	0.0855
S1(LH)	Z(HL)	I0&I1&!I2&I3&!S0	0.0100	0.0010	0.3344	0.0857
S1(LH)	Z(HL)	I0&I1&I2&!I3&S0	0.0100	0.0010	0.3338	0.0857
S1(LH)	Z(LH)	!I0&!I1&!I2&I3&S0	0.0100	0.0010	0.3508	0.0761
S1(LH)	Z(LH)	!I0&!I1&I2&!I3&!S0	0.0100	0.0010	0.3505	0.0756
S1(LH)	Z(LH)	!I0&!I1&I2&I3&!S0	0.0100	0.0010	0.3505	0.0756
S1(LH)	Z(LH)	!I0&!I1&I2&I3&S0	0.0100	0.0010	0.3510	0.0756
S1(LH)	Z(LH)	!I0&I1&I2&!I3&!S0	0.0100	0.0010	0.3505	0.0756
S1(LH)	Z(LH)	!I0&I1&I2&I3&!S0	0.0100	0.0010	0.3505	0.0756
S1(LH)	Z(LH)	I0&!I1&!I2&I3&S0	0.0100	0.0010	0.3510	0.0756
S1(LH)	Z(LH)	I0&!I1&I2&I3&S0	0.0100	0.0010	0.3510	0.0756
S1(HL)	Z(HL)	!I0&!I1&!I2&I3&S0	0.0100	0.0010	0.3931	0.0936
S1(HL)	Z(HL)	!I0&!I1&I2&!I3&!S0	0.0100	0.0010	0.3927	0.0936
S1(HL)	Z(HL)	!I0&!I1&I2&I3&!S0	0.0100	0.0010	0.3927	0.0936
S1(HL)	Z(HL)	!I0&!I1&I2&I3&S0	0.0100	0.0010	0.3931	0.0936
S1(HL)	Z(HL)	!I0&I1&I2&!I3&!S0	0.0100	0.0010	0.3927	0.0936
S1(HL)	Z(HL)	!I0&I1&I2&I3&!S0	0.0100	0.0010	0.3927	0.0936
S1(HL)	Z(HL)	I0&!I1&!I2&I3&S0	0.0100	0.0010	0.3931	0.0936
S1(HL)	Z(HL)	I0&!I1&I2&I3&S0	0.0100	0.0010	0.3931	0.0936
S1(HL)	Z(LH)	!I0&I1&!I2&!I3&S0	0.0100	0.0010	0.4412	0.0749
S1(HL)	Z(LH)	!I0&I1&I2&!I3&S0	0.0100	0.0010	0.4412	0.0749
S1(HL)	Z(LH)	I0&!I1&!I2&!I3&!S0	0.0100	0.0010	0.4405	0.0750
S1(HL)	Z(LH)	I0&!I1&!I2&I3&!S0	0.0100	0.0010	0.4405	0.0750
S1(HL)	Z(LH)	I0&I1&!I2&!I3&!S0	0.0100	0.0010	0.4405	0.0750
S1(HL)	Z(LH)	I0&I1&!I2&!I3&S0	0.0100	0.0010	0.4412	0.0749
S1(HL)	Z(LH)	I0&I1&!I2&I3&!S0	0.0100	0.0010	0.4405	0.0750
S1(HL)	Z(LH)	I0&I1&I2&!I3&S0	0.0100	0.0010	0.4412	0.0749
I1(LH)	Z(LH)	!I0&!I2&!I3&S0&!S1	0.0100	0.0010	0.5569	0.0762
I1(LH)	Z(LH)	!I0&!I2&I3&S0&!S1	0.0100	0.0010	0.5568	0.0761
I1(LH)	Z(LH)	!I0&I2&!I3&S0&!S1	0.0100	0.0010	0.5569	0.0761
I1(LH)	Z(LH)	!I0&I2&I3&S0&!S1	0.0100	0.0010	0.5568	0.0761
I1(LH)	Z(LH)	I0&!I2&!I3&S0&!S1	0.0100	0.0010	0.5569	0.0761
I1(LH)	Z(LH)	I0&!I2&I3&S0&!S1	0.0100	0.0010	0.5568	0.0761
I1(LH)	Z(LH)	I0&I2&!I3&S0&!S1	0.0100	0.0010	0.5569	0.0761
I1(LH)	Z(LH)	I0&I2&I3&S0&!S1	0.0100	0.0010	0.5568	0.0761
I1(HL)	Z(HL)	!I0&!I2&!I3&S0&!S1	0.0100	0.0010	0.5981	0.1039
I1(HL)	Z(HL)	!I0&!I2&I3&S0&!S1	0.0100	0.0010	0.5979	0.1042
I1(HL)	Z(HL)	!I0&I2&!I3&S0&!S1	0.0100	0.0010	0.5979	0.1042
I1(HL)	Z(HL)	!I0&I2&I3&S0&!S1	0.0100	0.0010	0.5979	0.1042
I1(HL)	Z(HL)	I0&!I2&!I3&S0&!S1	0.0100	0.0010	0.5979	0.1042

continues on next page

Table 61 – continued from previous page

I1(HL)	Z(HL)	I0&!I2&I3&S0&!S1	0.0100	0.0010	0.5980	0.1041
I1(HL)	Z(HL)	I0&I2&!I3&S0&!S1	0.0100	0.0010	0.5981	0.1039
I1(HL)	Z(HL)	I0&I2&I3&S0&!S1	0.0100	0.0010	0.5981	0.1039
I0(LH)	Z(LH)	!I1&!I2&!I3&!S0&!S1	0.0100	0.0010	0.5663	0.0763
I0(LH)	Z(LH)	!I1&!I2&I3&!S0&!S1	0.0100	0.0010	0.5663	0.0764
I0(LH)	Z(LH)	!I1&I2&!I3&!S0&!S1	0.0100	0.0010	0.5662	0.0763
I0(LH)	Z(LH)	!I1&I2&I3&!S0&!S1	0.0100	0.0010	0.5662	0.0763
I0(LH)	Z(LH)	I1&!I2&!I3&!S0&!S1	0.0100	0.0010	0.5663	0.0763
I0(LH)	Z(LH)	I1&!I2&I3&!S0&!S1	0.0100	0.0010	0.5665	0.0762
I0(LH)	Z(LH)	I1&I2&!I3&!S0&!S1	0.0100	0.0010	0.5663	0.0763
I0(LH)	Z(LH)	I1&I2&I3&!S0&!S1	0.0100	0.0010	0.5662	0.0763
I0(HL)	Z(HL)	!I1&!I2&!I3&!S0&!S1	0.0100	0.0010	0.6047	0.1042
I0(HL)	Z(HL)	!I1&!I2&I3&!S0&!S1	0.0100	0.0010	0.6047	0.1042
I0(HL)	Z(HL)	!I1&I2&!I3&!S0&!S1	0.0100	0.0010	0.6045	0.1042
I0(HL)	Z(HL)	!I1&I2&I3&!S0&!S1	0.0100	0.0010	0.6045	0.1042
I0(HL)	Z(HL)	I1&!I2&!I3&!S0&!S1	0.0100	0.0010	0.6047	0.1042
I0(HL)	Z(HL)	I1&!I2&I3&!S0&!S1	0.0100	0.0010	0.6047	0.1042
I0(HL)	Z(HL)	I1&I2&!I3&!S0&!S1	0.0100	0.0010	0.6045	0.1042
I0(HL)	Z(HL)	I1&I2&I3&!S0&!S1	0.0100	0.0010	0.6045	0.1042

DYNAMIC ENERGY

Input Pin	When Condition	Tin (ns)	Output	Out Load (pf)	Energy (uW/MHz)
S1	!I0&I1&!I2&!I3&S0	0.0100	Z(HL)	0.0010	0.6478
S1	!I0&I1&I2&!I3&S0	0.0100	Z(HL)	0.0010	0.6478
S1	I0&!I1&!I2&!I3&!S0	0.0100	Z(HL)	0.0010	0.6485
S1	I0&!I1&!I2&I3&!S0	0.0100	Z(HL)	0.0010	0.6486
S1	I0&I1&!I2&!I3&!S0	0.0100	Z(HL)	0.0010	0.6485
S1	I0&I1&!I2&!I3&S0	0.0100	Z(HL)	0.0010	0.6478
S1	I0&I1&!I2&I3&!S0	0.0100	Z(HL)	0.0010	0.6486
S1	I0&I1&I2&!I3&S0	0.0100	Z(HL)	0.0010	0.6478
S1	!I0&!I1&!I2&I3&S0	0.0100	Z(HL)	0.0010	0.7847
S1	!I0&!I1&I2&!I3&!S0	0.0100	Z(HL)	0.0010	0.7848
S1	!I0&!I1&I2&I3&!S0	0.0100	Z(HL)	0.0010	0.7848
S1	!I0&!I1&I2&I3&S0	0.0100	Z(HL)	0.0010	0.7847
S1	!I0&I1&I2&!I3&!S0	0.0100	Z(HL)	0.0010	0.7848
S1	!I0&I1&I2&I3&!S0	0.0100	Z(HL)	0.0010	0.7848
S1	I0&!I1&!I2&I3&S0	0.0100	Z(HL)	0.0010	0.7847
S1	I0&!I1&I2&I3&S0	0.0100	Z(HL)	0.0010	0.7847
S1	!I0&!I1&!I2&I3&S0	0.0100	Z(LH)	0.0010	0.4821
S1	!I0&!I1&I2&!I3&!S0	0.0100	Z(LH)	0.0010	0.4815
S1	!I0&!I1&I2&I3&!S0	0.0100	Z(LH)	0.0010	0.4815
S1	!I0&!I1&I2&I3&S0	0.0100	Z(LH)	0.0010	0.4818
S1	!I0&I1&I2&!I3&!S0	0.0100	Z(LH)	0.0010	0.4815
S1	!I0&I1&I2&I3&!S0	0.0100	Z(LH)	0.0010	0.4815
S1	I0&!I1&!I2&I3&S0	0.0100	Z(LH)	0.0010	0.4818
S1	I0&!I1&I2&I3&S0	0.0100	Z(LH)	0.0010	0.4818

continues on next page

Table 62 – continued from previous page

S1	!I0&I1&!I2&!I3&S0	0.0100	Z(LH)	0.0010	0.6288
S1	!I0&I1&I2&!I3&S0	0.0100	Z(LH)	0.0010	0.6288
S1	I0&!I1&!I2&!I3&!S0	0.0100	Z(LH)	0.0010	0.6288
S1	I0&!I1&!I2&I3&!S0	0.0100	Z(LH)	0.0010	0.6288
S1	I0&I1&!I2&!I3&!S0	0.0100	Z(LH)	0.0010	0.6288
S1	I0&I1&!I2&!I3&S0	0.0100	Z(LH)	0.0010	0.6288
S1	I0&I1&!I2&I3&!S0	0.0100	Z(LH)	0.0010	0.6288
S1	I0&I1&I2&!I3&S0	0.0100	Z(LH)	0.0010	0.6288
I0	!I1&!I2&!I3&!S0&!S1	0.0100	Z(LH)	0.0010	0.5778
I0	!I1&!I2&I3&!S0&!S1	0.0100	Z(LH)	0.0010	0.5777
I0	!I1&I2&!I3&!S0&!S1	0.0100	Z(LH)	0.0010	0.5778
I0	!I1&I2&I3&!S0&!S1	0.0100	Z(LH)	0.0010	0.5778
I0	I1&!I2&!I3&!S0&!S1	0.0100	Z(LH)	0.0010	0.5778
I0	I1&!I2&I3&!S0&!S1	0.0100	Z(LH)	0.0010	0.5778
I0	I1&I2&!I3&!S0&!S1	0.0100	Z(LH)	0.0010	0.5776
I0	I1&I2&I3&!S0&!S1	0.0100	Z(LH)	0.0010	0.5778
I3	!I0&!I1&!I2&S0&S1	0.0100	Z(LH)	0.0010	0.5680
I3	!I0&!I1&I2&S0&S1	0.0100	Z(LH)	0.0010	0.5680
I3	!I0&I1&!I2&S0&S1	0.0100	Z(LH)	0.0010	0.5679
I3	!I0&I1&I2&S0&S1	0.0100	Z(LH)	0.0010	0.5680
I3	I0&!I1&!I2&S0&S1	0.0100	Z(LH)	0.0010	0.5680
I3	I0&!I1&I2&S0&S1	0.0100	Z(LH)	0.0010	0.5680
I3	I0&I1&!I2&S0&S1	0.0100	Z(LH)	0.0010	0.5679
I3	I0&I1&I2&S0&S1	0.0100	Z(LH)	0.0010	0.5680
I2	!I0&!I1&!I3&!S0&S1	0.0100	Z(HL)	0.0010	0.9426
I2	!I0&!I1&I3&!S0&S1	0.0100	Z(HL)	0.0010	0.9426
I2	!I0&I1&!I3&!S0&S1	0.0100	Z(HL)	0.0010	0.9426
I2	!I0&I1&I3&!S0&S1	0.0100	Z(HL)	0.0010	0.9426
I2	I0&!I1&!I3&!S0&S1	0.0100	Z(HL)	0.0010	0.9426
I2	I0&!I1&I3&!S0&S1	0.0100	Z(HL)	0.0010	0.9426
I2	I0&I1&!I3&!S0&S1	0.0100	Z(HL)	0.0010	0.9426
I2	I0&I1&I3&!S0&S1	0.0100	Z(HL)	0.0010	0.9426
I1	!I0&!I2&!I3&S0&!S1	0.0100	Z(LH)	0.0010	0.5585
I1	!I0&!I2&I3&S0&!S1	0.0100	Z(LH)	0.0010	0.5584
I1	!I0&I2&!I3&S0&!S1	0.0100	Z(LH)	0.0010	0.5585
I1	!I0&I2&I3&S0&!S1	0.0100	Z(LH)	0.0010	0.5584
I1	I0&!I2&!I3&S0&!S1	0.0100	Z(LH)	0.0010	0.5585
I1	I0&!I2&I3&S0&!S1	0.0100	Z(LH)	0.0010	0.5584
I1	I0&I2&!I3&S0&!S1	0.0100	Z(LH)	0.0010	0.5585
I1	I0&I2&I3&S0&!S1	0.0100	Z(LH)	0.0010	0.5584
I3	!I0&!I1&!I2&S0&S1	0.0100	Z(HL)	0.0010	0.9602
I3	!I0&!I1&I2&S0&S1	0.0100	Z(HL)	0.0010	0.9602
I3	!I0&I1&!I2&S0&S1	0.0100	Z(HL)	0.0010	0.9602
I3	!I0&I1&I2&S0&S1	0.0100	Z(HL)	0.0010	0.9602
I3	I0&!I1&!I2&S0&S1	0.0100	Z(HL)	0.0010	0.9602
I3	I0&!I1&I2&S0&S1	0.0100	Z(HL)	0.0010	0.9602
I3	I0&I1&!I2&S0&S1	0.0100	Z(HL)	0.0010	0.9602
I3	I0&I1&I2&S0&S1	0.0100	Z(HL)	0.0010	0.9602
I0	!I1&!I2&!I3&!S0&!S1	0.0100	Z(HL)	0.0010	0.9395
I0	!I1&!I2&I3&!S0&!S1	0.0100	Z(HL)	0.0010	0.9395
I0	!I1&I2&!I3&!S0&!S1	0.0100	Z(HL)	0.0010	0.9395
I0	!I1&I2&I3&!S0&!S1	0.0100	Z(HL)	0.0010	0.9395

continues on next page

Table 62 – continued from previous page

I0	I1&!I2&!I3&!S0&!S1	0.0100	Z(HL)	0.0010	0.9395
I0	I1&!I2&I3&!S0&!S1	0.0100	Z(HL)	0.0010	0.9395
I0	I1&I2&!I3&!S0&!S1	0.0100	Z(HL)	0.0010	0.9395
I0	I1&I2&I3&!S0&!S1	0.0100	Z(HL)	0.0010	0.9395
S0	!I0&!I1&I2&!I3&S1	0.0100	Z(LH)	0.0010	0.8473
S0	!I0&I1&I2&!I3&S1	0.0100	Z(LH)	0.0010	0.9477
S0	I0&!I1&!I2&!I3&!S1	0.0100	Z(LH)	0.0010	0.8317
S0	I0&!I1&!I2&I3&!S1	0.0100	Z(LH)	0.0010	0.9725
S0	I0&!I1&I2&!I3&!S1	0.0100	Z(LH)	0.0010	0.9277
S0	I0&!I1&I2&!I3&S1	0.0100	Z(LH)	0.0010	0.9230
S0	I0&!I1&I2&I3&!S1	0.0100	Z(LH)	0.0010	0.8240
S0	I0&I1&I2&!I3&S1	0.0100	Z(LH)	0.0010	0.8433
S0	!I0&!I1&!I2&I3&S1	0.0100	Z(LH)	0.0010	0.5507
S0	!I0&I1&!I2&!I3&!S1	0.0100	Z(LH)	0.0010	0.5487
S0	!I0&I1&!I2&I3&!S1	0.0100	Z(LH)	0.0010	0.5778
S0	!I0&I1&!I2&I3&S1	0.0100	Z(LH)	0.0010	0.5723
S0	!I0&I1&I2&!I3&!S1	0.0100	Z(LH)	0.0010	0.7599
S0	!I0&I1&I2&I3&!S1	0.0100	Z(LH)	0.0010	0.5488
S0	I0&!I1&!I2&I3&S1	0.0100	Z(LH)	0.0010	0.7163
S0	I0&I1&!I2&I3&S1	0.0100	Z(LH)	0.0010	0.5505
I2	!I0&!I1&!I3&!S0&S1	0.0100	Z(LH)	0.0010	0.5889
I2	!I0&!I1&I3&!S0&S1	0.0100	Z(LH)	0.0010	0.5889
I2	!I0&I1&!I3&!S0&S1	0.0100	Z(LH)	0.0010	0.5889
I2	!I0&I1&I3&!S0&S1	0.0100	Z(LH)	0.0010	0.5889
I2	I0&!I1&!I3&!S0&S1	0.0100	Z(LH)	0.0010	0.5889
I2	I0&!I1&I3&!S0&S1	0.0100	Z(LH)	0.0010	0.5889
I2	I0&I1&!I3&!S0&S1	0.0100	Z(LH)	0.0010	0.5889
I2	I0&I1&I3&!S0&S1	0.0100	Z(LH)	0.0010	0.5889
S0	!I0&!I1&!I2&I3&S1	0.0100	Z(HL)	0.0010	1.0971
S0	!I0&I1&!I2&!I3&!S1	0.0100	Z(HL)	0.0010	1.0953
S0	!I0&I1&!I2&I3&!S1	0.0100	Z(HL)	0.0010	1.2384
S0	!I0&I1&!I2&I3&S1	0.0100	Z(HL)	0.0010	1.1996
S0	!I0&I1&I2&!I3&!S1	0.0100	Z(HL)	0.0010	1.1866
S0	!I0&I1&I2&I3&!S1	0.0100	Z(HL)	0.0010	1.0892
S0	I0&!I1&!I2&I3&S1	0.0100	Z(HL)	0.0010	1.1670
S0	I0&I1&!I2&I3&S1	0.0100	Z(HL)	0.0010	1.0940
S0	!I0&!I1&I2&!I3&S1	0.0100	Z(HL)	0.0010	0.9296
S0	!I0&I1&I2&!I3&S1	0.0100	Z(HL)	0.0010	0.9477
S0	I0&!I1&!I2&!I3&!S1	0.0100	Z(HL)	0.0010	0.9248
S0	I0&!I1&!I2&I3&!S1	0.0100	Z(HL)	0.0010	0.9501
S0	I0&!I1&I2&!I3&!S1	0.0100	Z(HL)	0.0010	1.1403
S0	I0&!I1&I2&!I3&S1	0.0100	Z(HL)	0.0010	1.1006
S0	I0&!I1&I2&I3&!S1	0.0100	Z(HL)	0.0010	0.9242
S0	I0&I1&I2&!I3&S1	0.0100	Z(HL)	0.0010	0.9296
I1	!I0&!I2&!I3&S0&!S1	0.0100	Z(HL)	0.0010	0.9455
I1	!I0&!I2&I3&S0&!S1	0.0100	Z(HL)	0.0010	0.9456
I1	!I0&I2&!I3&S0&!S1	0.0100	Z(HL)	0.0010	0.9455
I1	!I0&I2&I3&S0&!S1	0.0100	Z(HL)	0.0010	0.9455
I1	I0&!I2&!I3&S0&!S1	0.0100	Z(HL)	0.0010	0.9455
I1	I0&!I2&I3&S0&!S1	0.0100	Z(HL)	0.0010	0.9455
I1	I0&I2&!I3&S0&!S1	0.0100	Z(HL)	0.0010	0.9455
I1	I0&I2&I3&S0&!S1	0.0100	Z(HL)	0.0010	0.9455

continues on next page

Table 62 – continued from previous page

I3(HL)	!I0&!I1&!I2&!S0&!S1	0.0100	n/a	n/a	0.0684
I3(HL)	!I0&!I1&!I2&!S0&S1	0.0100	n/a	n/a	0.0684
I3(HL)	!I0&!I1&!I2&S0&!S1	0.0100	n/a	n/a	0.2415
I3(HL)	!I0&!I1&I2&!S0&!S1	0.0100	n/a	n/a	0.0684
I3(HL)	!I0&!I1&I2&S0&!S1	0.0100	n/a	n/a	0.2415
I3(HL)	!I0&I1&!I2&!S0&!S1	0.0100	n/a	n/a	0.0684
I3(HL)	!I0&I1&!I2&!S0&S1	0.0100	n/a	n/a	0.0684
I3(HL)	!I0&I1&I2&!S0&!S1	0.0100	n/a	n/a	0.0684
I3(HL)	I0&!I1&!I2&!S0&S1	0.0100	n/a	n/a	0.0684
I3(HL)	I0&!I1&!I2&S0&!S1	0.0100	n/a	n/a	0.2415
I3(HL)	I0&!I1&I2&S0&!S1	0.0100	n/a	n/a	0.2415
I3(HL)	I0&I1&!I2&!S0&S1	0.0100	n/a	n/a	0.0684
I3(HL)	!I0&!I1&I2&!S0&S1	0.0100	n/a	n/a	0.0684
I3(HL)	!I0&I1&!I2&S0&!S1	0.0100	n/a	n/a	0.2415
I3(HL)	!I0&I1&I2&!S0&S1	0.0100	n/a	n/a	0.0684
I3(HL)	!I0&I1&I2&S0&!S1	0.0100	n/a	n/a	0.2415
I3(HL)	I0&!I1&!I2&!S0&!S1	0.0100	n/a	n/a	0.0684
I3(HL)	I0&!I1&I2&!S0&!S1	0.0100	n/a	n/a	0.0684
I3(HL)	I0&!I1&I2&!S0&S1	0.0100	n/a	n/a	0.0684
I3(HL)	I0&I1&!I2&!S0&!S1	0.0100	n/a	n/a	0.0684
I3(HL)	I0&I1&!I2&S0&!S1	0.0100	n/a	n/a	0.2415
I3(HL)	I0&I1&I2&!S0&!S1	0.0100	n/a	n/a	0.0684
I3(HL)	I0&I1&I2&!S0&S1	0.0100	n/a	n/a	0.0684
I3(HL)	I0&I1&I2&S0&!S1	0.0100	n/a	n/a	0.2415
I2(LH)	!I0&!I1&!I3&!S0&!S1	0.0100	n/a	n/a	0.0666
I2(LH)	!I0&!I1&!I3&S0&!S1	0.0100	n/a	n/a	0.0117
I2(LH)	!I0&!I1&!I3&S0&S1	0.0100	n/a	n/a	0.0119
I2(LH)	!I0&!I1&I3&!S0&!S1	0.0100	n/a	n/a	0.0667
I2(LH)	!I0&!I1&I3&S0&!S1	0.0100	n/a	n/a	0.0119
I2(LH)	!I0&I1&!I3&!S0&!S1	0.0100	n/a	n/a	0.0666
I2(LH)	!I0&I1&!I3&S0&S1	0.0100	n/a	n/a	0.0119
I2(LH)	!I0&I1&I3&!S0&!S1	0.0100	n/a	n/a	0.0667
I2(LH)	I0&!I1&!I3&S0&!S1	0.0100	n/a	n/a	0.0118
I2(LH)	I0&!I1&!I3&S0&S1	0.0100	n/a	n/a	0.0117
I2(LH)	I0&!I1&I3&S0&!S1	0.0100	n/a	n/a	0.0118
I2(LH)	I0&I1&!I3&S0&S1	0.0100	n/a	n/a	0.0118
I2(LH)	!I0&!I1&I3&S0&S1	0.0100	n/a	n/a	0.0118
I2(LH)	!I0&I1&!I3&S0&!S1	0.0100	n/a	n/a	0.0117
I2(LH)	!I0&I1&I3&S0&!S1	0.0100	n/a	n/a	0.0118
I2(LH)	!I0&I1&I3&S0&S1	0.0100	n/a	n/a	0.0118
I2(LH)	I0&!I1&!I3&!S0&!S1	0.0100	n/a	n/a	0.0667
I2(LH)	I0&!I1&I3&!S0&!S1	0.0100	n/a	n/a	0.0667
I2(LH)	I0&!I1&I3&S0&S1	0.0100	n/a	n/a	0.0117
I2(LH)	I0&I1&!I3&!S0&!S1	0.0100	n/a	n/a	0.0666
I2(LH)	I0&I1&!I3&S0&!S1	0.0100	n/a	n/a	0.0118
I2(LH)	I0&I1&I3&!S0&!S1	0.0100	n/a	n/a	0.0667
I2(LH)	I0&I1&I3&S0&!S1	0.0100	n/a	n/a	0.0117
I2(LH)	I0&I1&I3&S0&S1	0.0100	n/a	n/a	0.0119
I1(LH)	!I0&!I2&!I3&!S0&!S1	0.0100	n/a	n/a	0.0052
I1(LH)	!I0&!I2&!I3&!S0&S1	0.0100	n/a	n/a	0.0053
I1(LH)	!I0&!I2&!I3&S0&S1	0.0100	n/a	n/a	0.0321
I1(LH)	!I0&!I2&I3&!S0&!S1	0.0100	n/a	n/a	0.0052

continues on next page

Table 62 – continued from previous page

I1(LH)	!I0&!I2&I3&!S0&S1	0.0100	n/a	n/a	0.0053
I1(LH)	!I0&I2&!I3&!S0&!S1	0.0100	n/a	n/a	0.0052
I1(LH)	!I0&I2&!I3&S0&S1	0.0100	n/a	n/a	0.0321
I1(LH)	!I0&I2&I3&!S0&!S1	0.0100	n/a	n/a	0.0053
I1(LH)	I0&!I2&!I3&!S0&S1	0.0100	n/a	n/a	0.0053
I1(LH)	I0&!I2&!I3&S0&S1	0.0100	n/a	n/a	0.0321
I1(LH)	I0&!I2&I3&!S0&S1	0.0100	n/a	n/a	0.0053
I1(LH)	I0&I2&!I3&S0&S1	0.0100	n/a	n/a	0.0321
I1(LH)	!I0&!I2&I3&S0&S1	0.0100	n/a	n/a	0.0321
I1(LH)	!I0&I2&!I3&!S0&S1	0.0100	n/a	n/a	0.0053
I1(LH)	!I0&I2&I3&!S0&S1	0.0100	n/a	n/a	0.0053
I1(LH)	!I0&I2&I3&S0&S1	0.0100	n/a	n/a	0.0321
I1(LH)	I0&!I2&!I3&!S0&!S1	0.0100	n/a	n/a	0.0053
I1(LH)	I0&!I2&I3&!S0&!S1	0.0100	n/a	n/a	0.0053
I1(LH)	I0&!I2&I3&S0&S1	0.0100	n/a	n/a	0.0321
I1(LH)	I0&I2&!I3&!S0&!S1	0.0100	n/a	n/a	0.0052
I1(LH)	I0&I2&!I3&!S0&S1	0.0100	n/a	n/a	0.0053
I1(LH)	I0&I2&I3&!S0&!S1	0.0100	n/a	n/a	0.0052
I1(LH)	I0&I2&I3&!S0&S1	0.0100	n/a	n/a	0.0053
I1(LH)	I0&I2&I3&S0&S1	0.0100	n/a	n/a	0.0321
S0(HL)	!I0&!I1&!I2&!I3&!S1	0.0100	n/a	n/a	0.2263
S0(HL)	!I0&!I1&!I2&!I3&S1	0.0100	n/a	n/a	0.2264
S0(HL)	!I0&!I1&!I2&I3&!S1	0.0100	n/a	n/a	0.3728
S0(HL)	!I0&!I1&I2&!I3&!S1	0.0100	n/a	n/a	0.3172
S0(HL)	!I0&!I1&I2&I3&!S1	0.0100	n/a	n/a	0.2207
S0(HL)	!I0&I1&!I2&!I3&S1	0.0100	n/a	n/a	0.3317
S0(HL)	I0&!I1&!I2&!I3&S1	0.0100	n/a	n/a	0.2964
S0(HL)	I0&I1&!I2&!I3&S1	0.0100	n/a	n/a	0.2236
S0(HL)	!I0&!I1&I2&I3&S1	0.0100	n/a	n/a	0.2207
S0(HL)	!I0&I1&I2&I3&S1	0.0100	n/a	n/a	0.3262
S0(HL)	I0&!I1&I2&I3&S1	0.0100	n/a	n/a	0.2894
S0(HL)	I0&I1&!I2&!I3&!S1	0.0100	n/a	n/a	0.2237
S0(HL)	I0&I1&!I2&I3&!S1	0.0100	n/a	n/a	0.3702
S0(HL)	I0&I1&I2&!I3&!S1	0.0100	n/a	n/a	0.3133
S0(HL)	I0&I1&I2&I3&!S1	0.0100	n/a	n/a	0.2181
S0(HL)	I0&I1&I2&I3&S1	0.0100	n/a	n/a	0.2182
I1(HL)	!I0&!I2&!I3&!S0&!S1	0.0100	n/a	n/a	0.0575
I1(HL)	!I0&!I2&!I3&!S0&S1	0.0100	n/a	n/a	0.0575
I1(HL)	!I0&!I2&!I3&S0&S1	0.0100	n/a	n/a	0.1855
I1(HL)	!I0&!I2&I3&!S0&!S1	0.0100	n/a	n/a	0.0575
I1(HL)	!I0&!I2&I3&!S0&S1	0.0100	n/a	n/a	0.0575
I1(HL)	!I0&I2&!I3&!S0&!S1	0.0100	n/a	n/a	0.0575
I1(HL)	!I0&I2&!I3&S0&S1	0.0100	n/a	n/a	0.1855
I1(HL)	!I0&I2&I3&!S0&!S1	0.0100	n/a	n/a	0.0575
I1(HL)	I0&!I2&!I3&!S0&S1	0.0100	n/a	n/a	0.0575
I1(HL)	I0&!I2&!I3&S0&S1	0.0100	n/a	n/a	0.1855
I1(HL)	I0&!I2&I3&!S0&S1	0.0100	n/a	n/a	0.0575
I1(HL)	I0&I2&!I3&S0&S1	0.0100	n/a	n/a	0.1855
I1(HL)	!I0&!I2&I3&S0&S1	0.0100	n/a	n/a	0.1855
I1(HL)	!I0&I2&!I3&!S0&S1	0.0100	n/a	n/a	0.0575
I1(HL)	!I0&I2&I3&!S0&S1	0.0100	n/a	n/a	0.0575
I1(HL)	!I0&I2&I3&S0&S1	0.0100	n/a	n/a	0.1855

continues on next page

Table 62 – continued from previous page

I1(HL)	I0&!I2&!I3&!S0&!S1	0.0100	n/a	n/a	0.0575
I1(HL)	I0&!I2&I3&!S0&!S1	0.0100	n/a	n/a	0.0575
I1(HL)	I0&!I2&I3&S0&S1	0.0100	n/a	n/a	0.1855
I1(HL)	I0&I2&!I3&!S0&!S1	0.0100	n/a	n/a	0.0575
I1(HL)	I0&I2&!I3&!S0&S1	0.0100	n/a	n/a	0.0575
I1(HL)	I0&I2&I3&!S0&!S1	0.0100	n/a	n/a	0.0575
I1(HL)	I0&I2&I3&!S0&S1	0.0100	n/a	n/a	0.0575
I1(HL)	I0&I2&I3&S0&S1	0.0100	n/a	n/a	0.1855
I3(LH)	!I0&!I1&!I2&!S0&!S1	0.0100	n/a	n/a	0.0106
I3(LH)	!I0&!I1&!I2&!S0&S1	0.0100	n/a	n/a	0.0107
I3(LH)	!I0&!I1&!I2&S0&!S1	0.0100	n/a	n/a	0.0470
I3(LH)	!I0&!I1&I2&!S0&!S1	0.0100	n/a	n/a	0.0107
I3(LH)	!I0&!I1&I2&S0&!S1	0.0100	n/a	n/a	0.0470
I3(LH)	!I0&I1&!I2&!S0&!S1	0.0100	n/a	n/a	0.0106
I3(LH)	!I0&I1&!I2&!S0&S1	0.0100	n/a	n/a	0.0106
I3(LH)	!I0&I1&I2&!S0&!S1	0.0100	n/a	n/a	0.0107
I3(LH)	I0&!I1&!I2&!S0&S1	0.0100	n/a	n/a	0.0107
I3(LH)	I0&!I1&!I2&S0&!S1	0.0100	n/a	n/a	0.0470
I3(LH)	I0&!I1&I2&S0&!S1	0.0100	n/a	n/a	0.0469
I3(LH)	I0&I1&!I2&!S0&S1	0.0100	n/a	n/a	0.0107
I3(LH)	!I0&!I1&I2&!S0&S1	0.0100	n/a	n/a	0.0106
I3(LH)	!I0&I1&!I2&S0&!S1	0.0100	n/a	n/a	0.0470
I3(LH)	!I0&I1&I2&!S0&S1	0.0100	n/a	n/a	0.0107
I3(LH)	!I0&I1&I2&S0&!S1	0.0100	n/a	n/a	0.0470
I3(LH)	I0&!I1&!I2&!S0&!S1	0.0100	n/a	n/a	0.0106
I3(LH)	I0&!I1&I2&!S0&!S1	0.0100	n/a	n/a	0.0106
I3(LH)	I0&!I1&I2&!S0&S1	0.0100	n/a	n/a	0.0106
I3(LH)	I0&I1&!I2&!S0&!S1	0.0100	n/a	n/a	0.0106
I3(LH)	I0&I1&!I2&S0&!S1	0.0100	n/a	n/a	0.0470
I3(LH)	I0&I1&I2&!S0&!S1	0.0100	n/a	n/a	0.0106
I3(LH)	I0&I1&I2&!S0&S1	0.0100	n/a	n/a	0.0106
I3(LH)	I0&I1&I2&S0&!S1	0.0100	n/a	n/a	0.0470
I0(HL)	!I1&!I2&!I3&!S0&S1	0.0100	n/a	n/a	0.1775
I0(HL)	!I1&!I2&!I3&S0&!S1	0.0100	n/a	n/a	0.0663
I0(HL)	!I1&!I2&!I3&S0&S1	0.0100	n/a	n/a	0.0663
I0(HL)	!I1&!I2&I3&!S0&S1	0.0100	n/a	n/a	0.1775
I0(HL)	!I1&!I2&I3&S0&!S1	0.0100	n/a	n/a	0.0663
I0(HL)	!I1&I2&!I3&S0&!S1	0.0100	n/a	n/a	0.0663
I0(HL)	!I1&I2&!I3&S0&S1	0.0100	n/a	n/a	0.0663
I0(HL)	!I1&I2&I3&S0&!S1	0.0100	n/a	n/a	0.0663
I0(HL)	I1&!I2&!I3&!S0&S1	0.0100	n/a	n/a	0.1775
I0(HL)	I1&!I2&!I3&S0&S1	0.0100	n/a	n/a	0.0663
I0(HL)	I1&!I2&I3&!S0&S1	0.0100	n/a	n/a	0.1775
I0(HL)	I1&I2&!I3&S0&S1	0.0100	n/a	n/a	0.0663
I0(HL)	!I1&!I2&I3&S0&S1	0.0100	n/a	n/a	0.0663
I0(HL)	!I1&I2&!I3&!S0&S1	0.0100	n/a	n/a	0.1775
I0(HL)	!I1&I2&I3&!S0&S1	0.0100	n/a	n/a	0.1775
I0(HL)	!I1&I2&I3&S0&S1	0.0100	n/a	n/a	0.0663
I0(HL)	I1&!I2&!I3&S0&!S1	0.0100	n/a	n/a	0.0663
I0(HL)	I1&!I2&I3&S0&!S1	0.0100	n/a	n/a	0.0663
I0(HL)	I1&!I2&I3&S0&S1	0.0100	n/a	n/a	0.0663
I0(HL)	I1&I2&!I3&!S0&S1	0.0100	n/a	n/a	0.1775

continues on next page

Table 62 – continued from previous page

I0(HL)	I1&I2&!I3&S0&!S1	0.0100	n/a	n/a	0.0663
I0(HL)	I1&I2&I3&!S0&S1	0.0100	n/a	n/a	0.1775
I0(HL)	I1&I2&I3&S0&!S1	0.0100	n/a	n/a	0.0663
I0(HL)	I1&I2&I3&S0&S1	0.0100	n/a	n/a	0.0663
S1(HL)	!I0&!I1&!I2&!I3&!S0	0.0100	n/a	n/a	0.1128
S1(HL)	!I0&!I1&!I2&!I3&S0	0.0100	n/a	n/a	0.1128
S1(HL)	!I0&!I1&!I2&I3&!S0	0.0100	n/a	n/a	0.1128
S1(HL)	!I0&!I1&I2&!I3&S0	0.0100	n/a	n/a	0.1128
S1(HL)	!I0&I1&!I2&!I3&!S0	0.0100	n/a	n/a	0.1128
S1(HL)	!I0&I1&!I2&I3&!S0	0.0100	n/a	n/a	0.1128
S1(HL)	I0&!I1&!I2&!I3&S0	0.0100	n/a	n/a	0.1128
S1(HL)	I0&!I1&I2&!I3&S0	0.0100	n/a	n/a	0.1128
S1(HL)	!I0&I1&!I2&I3&S0	0.0100	n/a	n/a	0.1103
S1(HL)	!I0&I1&I2&I3&S0	0.0100	n/a	n/a	0.1103
S1(HL)	I0&!I1&I2&!I3&!S0	0.0100	n/a	n/a	0.1103
S1(HL)	I0&!I1&I2&I3&!S0	0.0100	n/a	n/a	0.1103
S1(HL)	I0&I1&!I2&I3&S0	0.0100	n/a	n/a	0.1103
S1(HL)	I0&I1&I2&!I3&!S0	0.0100	n/a	n/a	0.1103
S1(HL)	I0&I1&I2&I3&!S0	0.0100	n/a	n/a	0.1103
S1(HL)	I0&I1&I2&I3&S0	0.0100	n/a	n/a	0.1103
I0(LH)	!I1&!I2&!I3&!S0&S1	0.0100	n/a	n/a	0.0497
I0(LH)	!I1&!I2&!I3&S0&!S1	0.0100	n/a	n/a	0.0062
I0(LH)	!I1&!I2&!I3&S0&S1	0.0100	n/a	n/a	0.0062
I0(LH)	!I1&!I2&I3&!S0&S1	0.0100	n/a	n/a	0.0497
I0(LH)	!I1&!I2&I3&S0&!S1	0.0100	n/a	n/a	0.0063
I0(LH)	!I1&I2&!I3&S0&!S1	0.0100	n/a	n/a	0.0062
I0(LH)	!I1&I2&!I3&S0&S1	0.0100	n/a	n/a	0.0062
I0(LH)	!I1&I2&I3&S0&!S1	0.0100	n/a	n/a	0.0063
I0(LH)	I1&!I2&!I3&!S0&S1	0.0100	n/a	n/a	0.0497
I0(LH)	I1&!I2&!I3&S0&S1	0.0100	n/a	n/a	0.0062
I0(LH)	I1&!I2&I3&!S0&S1	0.0100	n/a	n/a	0.0497
I0(LH)	I1&I2&!I3&S0&S1	0.0100	n/a	n/a	0.0062
I0(LH)	!I1&!I2&I3&S0&S1	0.0100	n/a	n/a	0.0063
I0(LH)	!I1&I2&!I3&!S0&S1	0.0100	n/a	n/a	0.0497
I0(LH)	!I1&I2&I3&!S0&S1	0.0100	n/a	n/a	0.0497
I0(LH)	!I1&I2&I3&S0&S1	0.0100	n/a	n/a	0.0063
I0(LH)	I1&!I2&!I3&S0&!S1	0.0100	n/a	n/a	0.0063
I0(LH)	I1&!I2&I3&S0&!S1	0.0100	n/a	n/a	0.0062
I0(LH)	I1&!I2&I3&S0&S1	0.0100	n/a	n/a	0.0063
I0(LH)	I1&I2&!I3&!S0&S1	0.0100	n/a	n/a	0.0497
I0(LH)	I1&I2&!I3&S0&!S1	0.0100	n/a	n/a	0.0063
I0(LH)	I1&I2&I3&!S0&S1	0.0100	n/a	n/a	0.0497
I0(LH)	I1&I2&I3&S0&!S1	0.0100	n/a	n/a	0.0063
I0(LH)	I1&I2&I3&S0&S1	0.0100	n/a	n/a	0.0063
S0(LH)	!I0&!I1&!I2&!I3&!S1	0.0100	n/a	n/a	0.0014
S0(LH)	!I0&!I1&!I2&!I3&S1	0.0100	n/a	n/a	0.0014
S0(LH)	!I0&!I1&!I2&I3&!S1	0.0100	n/a	n/a	0.0307
S0(LH)	!I0&!I1&I2&!I3&!S1	0.0100	n/a	n/a	0.2154
S0(LH)	!I0&!I1&I2&I3&!S1	0.0100	n/a	n/a	0.0014
S0(LH)	!I0&I1&!I2&!I3&S1	0.0100	n/a	n/a	0.0232
S0(LH)	I0&!I1&!I2&!I3&S1	0.0100	n/a	n/a	0.1706
S0(LH)	I0&I1&!I2&!I3&S1	0.0100	n/a	n/a	0.0015

continues on next page

Table 62 – continued from previous page

S0(LH)	!I0&!I1&I2&I3&S1	0.0100	n/a	n/a	0.0014
S0(LH)	!I0&I1&I2&I3&S1	0.0100	n/a	n/a	0.0232
S0(LH)	I0&!I1&I2&I3&S1	0.0100	n/a	n/a	0.1701
S0(LH)	I0&I1&!I2&!I3&!S1	0.0100	n/a	n/a	0.0014
S0(LH)	I0&I1&!I2&I3&!S1	0.0100	n/a	n/a	0.0307
S0(LH)	I0&I1&I2&!I3&!S1	0.0100	n/a	n/a	0.2154
S0(LH)	I0&I1&I2&I3&!S1	0.0100	n/a	n/a	0.0014
S0(LH)	I0&I1&I2&I3&S1	0.0100	n/a	n/a	0.0015
I2(HL)	!I0&!I1&!I3&!S0&!S1	0.0100	n/a	n/a	0.2249
I2(HL)	!I0&!I1&!I3&S0&!S1	0.0100	n/a	n/a	0.0704
I2(HL)	!I0&!I1&!I3&S0&S1	0.0100	n/a	n/a	0.0704
I2(HL)	!I0&!I1&I3&!S0&!S1	0.0100	n/a	n/a	0.2249
I2(HL)	!I0&!I1&I3&S0&!S1	0.0100	n/a	n/a	0.0703
I2(HL)	!I0&I1&!I3&!S0&!S1	0.0100	n/a	n/a	0.2249
I2(HL)	!I0&I1&!I3&S0&S1	0.0100	n/a	n/a	0.0704
I2(HL)	!I0&I1&I3&!S0&!S1	0.0100	n/a	n/a	0.2249
I2(HL)	I0&!I1&!I3&S0&!S1	0.0100	n/a	n/a	0.0704
I2(HL)	I0&!I1&!I3&S0&S1	0.0100	n/a	n/a	0.0704
I2(HL)	I0&!I1&I3&S0&!S1	0.0100	n/a	n/a	0.0704
I2(HL)	I0&I1&!I3&S0&S1	0.0100	n/a	n/a	0.0703
I2(HL)	!I0&!I1&I3&S0&S1	0.0100	n/a	n/a	0.0704
I2(HL)	!I0&I1&!I3&S0&!S1	0.0100	n/a	n/a	0.0704
I2(HL)	!I0&I1&I3&S0&!S1	0.0100	n/a	n/a	0.0704
I2(HL)	!I0&I1&I3&S0&S1	0.0100	n/a	n/a	0.0704
I2(HL)	I0&!I1&!I3&!S0&!S1	0.0100	n/a	n/a	0.2249
I2(HL)	I0&!I1&I3&!S0&!S1	0.0100	n/a	n/a	0.2249
I2(HL)	I0&!I1&I3&S0&S1	0.0100	n/a	n/a	0.0704
I2(HL)	I0&I1&!I3&!S0&!S1	0.0100	n/a	n/a	0.2249
I2(HL)	I0&I1&!I3&S0&!S1	0.0100	n/a	n/a	0.0703
I2(HL)	I0&I1&I3&!S0&!S1	0.0100	n/a	n/a	0.2249
I2(HL)	I0&I1&I3&S0&!S1	0.0100	n/a	n/a	0.0704
I2(HL)	I0&I1&I3&S0&S1	0.0100	n/a	n/a	0.0703
S1(LH)	!I0&!I1&!I2&!I3&!S0	0.0100	n/a	n/a	0.0012
S1(LH)	!I0&!I1&!I2&!I3&S0	0.0100	n/a	n/a	0.0012
S1(LH)	!I0&!I1&!I2&I3&!S0	0.0100	n/a	n/a	0.0012
S1(LH)	!I0&!I1&I2&!I3&S0	0.0100	n/a	n/a	0.0012
S1(LH)	!I0&I1&!I2&!I3&!S0	0.0100	n/a	n/a	0.0012
S1(LH)	!I0&I1&!I2&I3&!S0	0.0100	n/a	n/a	0.0012
S1(LH)	I0&!I1&!I2&!I3&S0	0.0100	n/a	n/a	0.0012
S1(LH)	I0&!I1&I2&!I3&S0	0.0100	n/a	n/a	0.0012
S1(LH)	!I0&I1&!I2&I3&S0	0.0100	n/a	n/a	0.0012
S1(LH)	!I0&I1&I2&I3&S0	0.0100	n/a	n/a	0.0012
S1(LH)	I0&!I1&I2&!I3&!S0	0.0100	n/a	n/a	0.0012
S1(LH)	I0&!I1&I2&I3&!S0	0.0100	n/a	n/a	0.0012
S1(LH)	I0&I1&!I2&I3&S0	0.0100	n/a	n/a	0.0012
S1(LH)	I0&I1&I2&!I3&!S0	0.0100	n/a	n/a	0.0012
S1(LH)	I0&I1&I2&I3&!S0	0.0100	n/a	n/a	0.0012
S1(LH)	I0&I1&I2&I3&S0	0.0100	n/a	n/a	0.0012

LEAKAGE POWER

When Condition	Power (nW)
!I0&!I1&!I2&!I3&!S0&!S1	0.6179
!I0&!I1&!I2&!I3&!S0&S1	0.6167
!I0&!I1&!I2&!I3&S0&!S1	0.6167
!I0&!I1&!I2&!I3&S0&S1	0.6155
!I0&!I1&!I2&I3&!S0&!S1	0.6204
!I0&!I1&!I2&I3&!S0&S1	0.6191
!I0&!I1&!I2&I3&S0&!S1	0.6226
!I0&!I1&I2&!I3&!S0&!S1	0.6238
!I0&!I1&I2&!I3&S0&!S1	0.6191
!I0&!I1&I2&!I3&S0&S1	0.6179
!I0&!I1&I2&I3&!S0&!S1	0.6226
!I0&!I1&I2&I3&S0&!S1	0.6214
!I0&I1&!I2&!I3&!S0&!S1	0.6201
!I0&I1&!I2&!I3&!S0&S1	0.6189
!I0&I1&!I2&!I3&S0&S1	0.6211
!I0&I1&!I2&I3&!S0&!S1	0.6226
!I0&I1&!I2&I3&!S0&S1	0.6213
!I0&I1&I2&!I3&!S0&!S1	0.6260
!I0&I1&I2&!I3&S0&S1	0.6236
!I0&I1&I2&I3&!S0&!S1	0.6249
I0&!I1&!I2&!I3&!S0&S1	0.6223
I0&!I1&!I2&!I3&S0&!S1	0.6189
I0&!I1&!I2&!I3&S0&S1	0.6177
I0&!I1&!I2&I3&!S0&S1	0.6248
I0&!I1&!I2&I3&S0&!S1	0.6248
I0&!I1&I2&!I3&S0&!S1	0.6213
I0&!I1&I2&!I3&S0&S1	0.6201
I0&!I1&I2&I3&S0&!S1	0.6236
I0&I1&!I2&!I3&!S0&S1	0.6199
I0&I1&!I2&!I3&S0&S1	0.6186
I0&I1&!I2&I3&!S0&S1	0.6223
I0&I1&I2&!I3&S0&S1	0.6211
!I0&!I1&!I2&I3&S0&S1	0.6237
!I0&!I1&I2&!I3&!S0&S1	0.6249
!I0&!I1&I2&I3&!S0&S1	0.6238
!I0&!I1&I2&I3&S0&S1	0.6225
!I0&I1&!I2&!I3&S0&!S1	0.6247
!I0&I1&!I2&I3&S0&!S1	0.6260
!I0&I1&!I2&I3&S0&S1	0.6247
!I0&I1&I2&!I3&!S0&S1	0.6271
!I0&I1&I2&!I3&S0&!S1	0.6271
!I0&I1&I2&I3&!S0&S1	0.6260
!I0&I1&I2&I3&S0&!S1	0.6247
!I0&I1&I2&I3&S0&S1	0.6235
I0&!I1&!I2&!I3&!S0&!S1	0.6260
I0&!I1&!I2&I3&!S0&!S1	0.6284
I0&!I1&!I2&I3&S0&S1	0.6260
I0&!I1&I2&!I3&!S0&!S1	0.6271
I0&!I1&I2&!I3&!S0&S1	0.6260
I0&!I1&I2&I3&!S0&!S1	0.6260
I0&!I1&I2&I3&!S0&S1	0.6247

continues on next page

Table 63 – continued from previous page

I0&!I1&I2&I3&S0&S1	0.6247
I0&I1&!I2&!I3&!S0&!S1	0.6235
I0&I1&!I2&!I3&S0&!S1	0.6222
I0&I1&!I2&I3&!S0&!S1	0.6260
I0&I1&!I2&I3&S0&!S1	0.6234
I0&I1&!I2&I3&S0&S1	0.6222
I0&I1&I2&!I3&!S0&!S1	0.6247
I0&I1&I2&!I3&!S0&S1	0.6234
I0&I1&I2&!I3&S0&!S1	0.6247
I0&I1&I2&I3&!S0&!S1	0.6235
I0&I1&I2&I3&!S0&S1	0.6222
I0&I1&I2&I3&S0&!S1	0.6222
I0&I1&I2&I3&S0&S1	0.6210

gf180mcu_fd_sc_mcu7t5v0__nand2_1

gf180mcu_fd_sc_mcu7t5v0__nand2_1 symbol

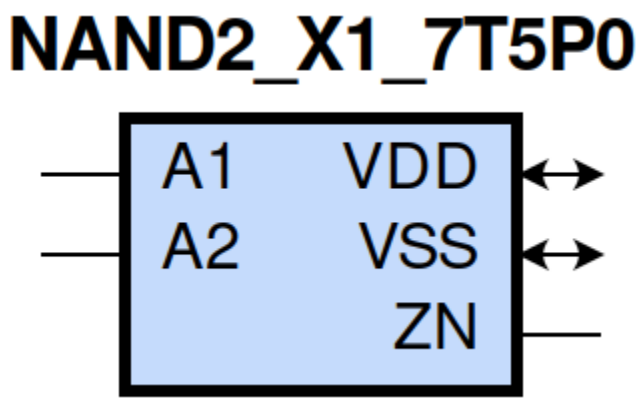

gf180mcu_fd_sc_mcu7t5v0__nand2_1 schematic

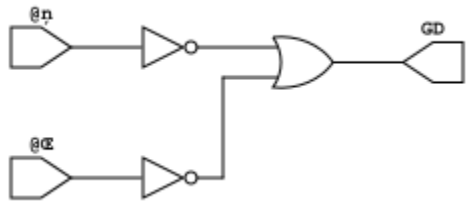

gf180mcu_fd_sc_mcu7t5v0__nand2_1 layout

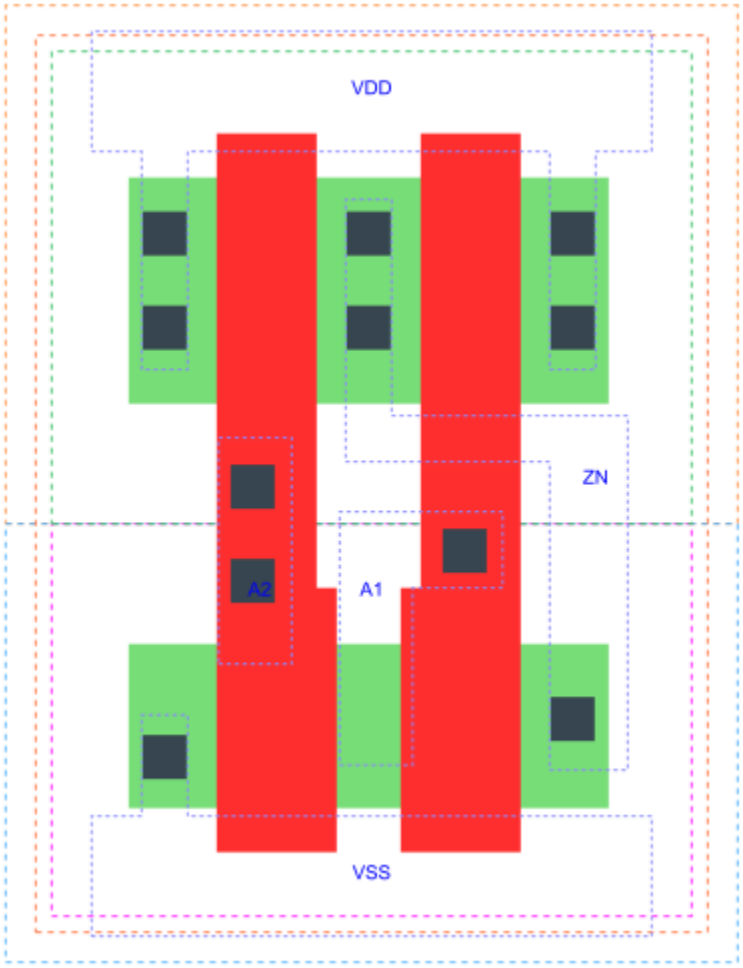

NAND2_X1 is a 2-input NAND, NAND(A1,A2), 1X drive strength

Attributes

Attribute	Value
area	10.976000 μm^2

OUTPUT FUNCTIONS

Output Pin	Function
ZN	((!A1)|(!A2))

TRUTH TABLE FOR ZN

A1	A2	ZN
0	?	1
?	0	1
1	1	0

FUNCTIONAL SCHEMATIC

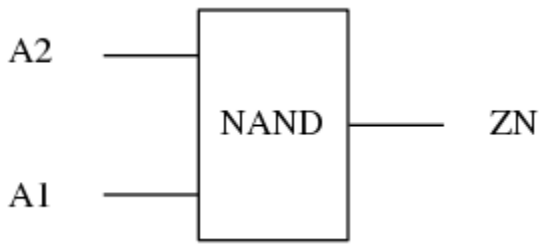

PIN CAPACITANCE (pf)

Pin	Type	Capacitance (pf)
A2	input	0.0045
A1	input	0.0048

DELAY AND OUTPUT TRANSITION TIME corresponding to min slew and load

Input Pin	Output	When Condition	Tin (ns)	Out Load (pf)	Delay (ns)	Tout (ns)
A2(HL)	ZN(LH)	A1	0.0100	0.0010	0.0798	0.0564
A2(LH)	ZN(HL)	A1	0.0100	0.0010	0.0692	0.0341
A1(HL)	ZN(LH)	A2	0.0100	0.0010	0.0616	0.0399
A1(LH)	ZN(HL)	A2	0.0100	0.0010	0.0579	0.0342

DYNAMIC ENERGY

Input Pin	When Condition	Tin (ns)	Output	Out Load (pf)	Energy (uW/MHz)
A1	A2	0.0100	ZN(LH)	0.0010	0.1082
A2	A1	0.0100	ZN(LH)	0.0010	0.1450
A1	A2	0.0100	ZN(HL)	0.0010	0.0023
A2	A1	0.0100	ZN(HL)	0.0010	0.0021
A2(LH)	!A1	0.0100	n/a	n/a	-0.0367
A1(LH)	!A2	0.0100	n/a	n/a	-0.0262
A2(HL)	!A1	0.0100	n/a	n/a	0.0408
A1(HL)	!A2	0.0100	n/a	n/a	0.0416

LEAKAGE POWER

When Condition	Power (nW)
!A1&!A2	0.0752
!A1&A2	0.0754
A1&!A2	0.1154
A1&A2	0.1029

gf180mcu_fd_sc_mcu7t5v0__nand2_2

gf180mcu_fd_sc_mcu7t5v0__nand2_2 symbol

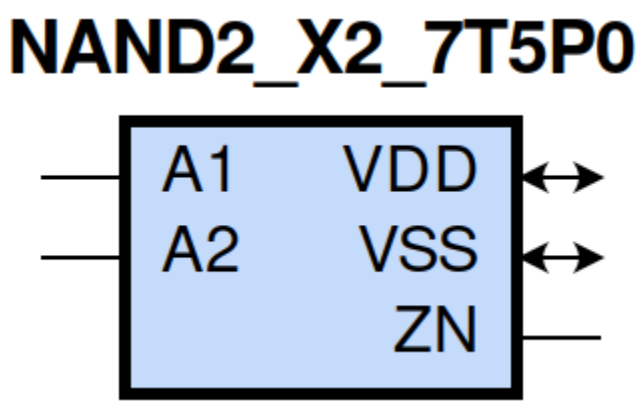

gf180mcu_fd_sc_mcu7t5v0__nand2_2 schematic

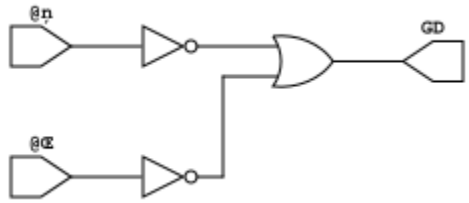

gf180mcu_fd_sc_mcu7t5v0__nand2_2 layout

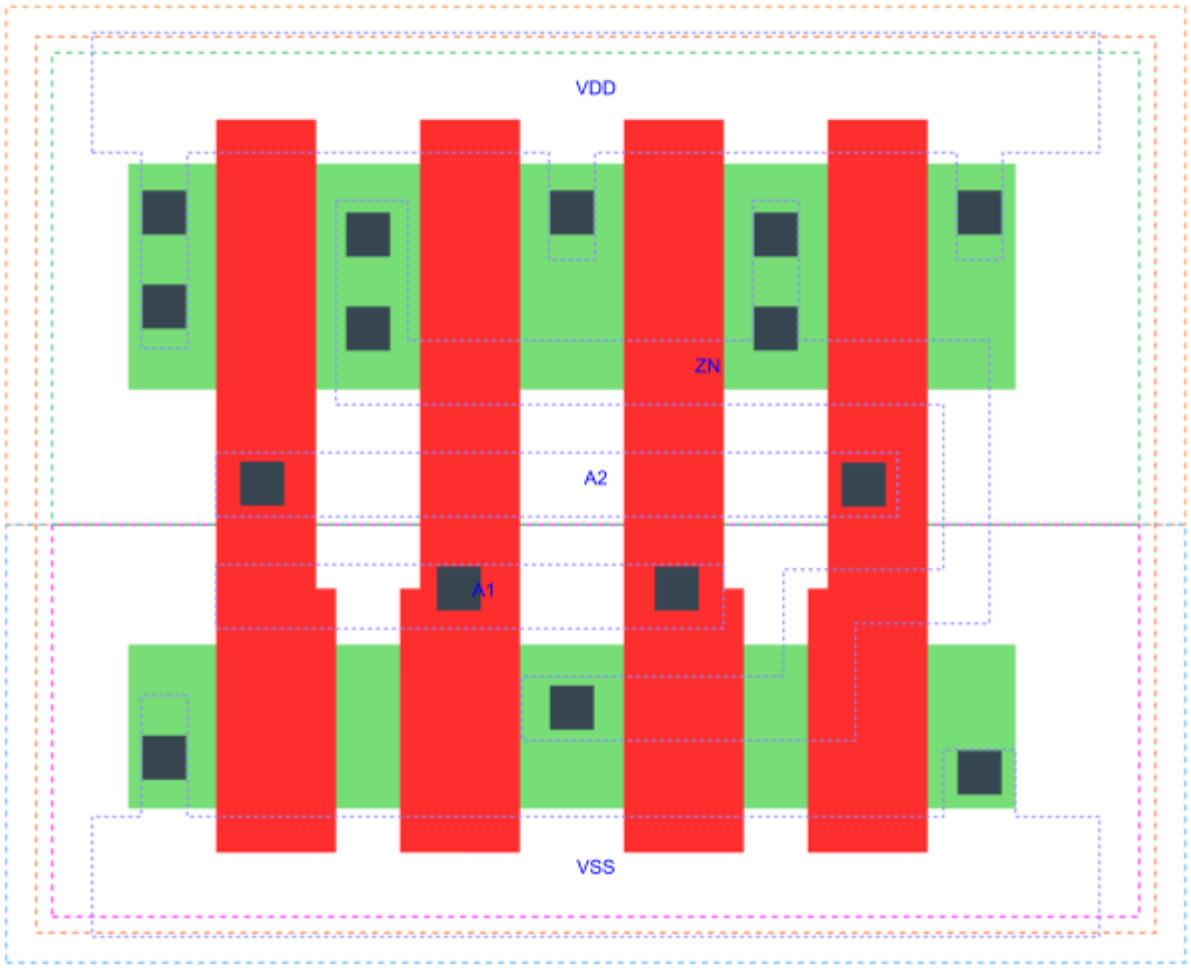

NAND2_X2 is a 2-input NAND, NAND(A1,A2), 2X drive strength

Attributes

Attribute	Value
area	19.756800 μm^2

OUTPUT FUNCTIONS

Output Pin	Function
ZN	((!A1)|(!A2))

TRUTH TABLE FOR ZN

A1	A2	ZN
0	?	1
?	0	1
1	1	0

FUNCTIONAL SCHEMATIC

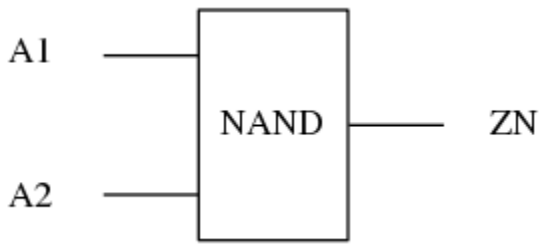

PIN CAPACITANCE (pf)

Pin	Type	Capacitance (pf)
A1	input	0.0092
A2	input	0.0096

DELAY AND OUTPUT TRANSITION TIME corresponding to min slew and load

Input Pin	Output	When Condition	Tin (ns)	Out Load (pf)	Delay (ns)	Tout (ns)
A1(HL)	ZN(LH)	A2	0.0100	0.0010	0.0536	0.0335
A1(LH)	ZN(HL)	A2	0.0100	0.0010	0.0514	0.0286
A2(HL)	ZN(LH)	A1	0.0100	0.0010	0.0718	0.0499
A2(LH)	ZN(HL)	A1	0.0100	0.0010	0.0628	0.0286

DYNAMIC ENERGY

Input Pin	When Condition	Tin (ns)	Output	Out Load (pf)	Energy (uW/MHz)
A1	A2	0.0100	ZN(LH)	0.0010	0.2028
A2	A1	0.0100	ZN(LH)	0.0010	0.2780
A1	A2	0.0100	ZN(HL)	0.0010	0.0040
A2	A1	0.0100	ZN(HL)	0.0010	0.0039
A2(LH)	!A1	0.0100	n/a	n/a	-0.0733
A1(LH)	!A2	0.0100	n/a	n/a	-0.0524
A2(HL)	!A1	0.0100	n/a	n/a	0.0816
A1(HL)	!A2	0.0100	n/a	n/a	0.0829

LEAKAGE POWER

When Condition	Power (nW)
!A1&!A2	0.1004
!A1&A2	0.1009
A1&!A2	0.1807
A1&A2	0.1558

gf180mcu_fd_sc_mcu7t5v0__nand2_4

gf180mcu_fd_sc_mcu7t5v0__nand2_4 symbol

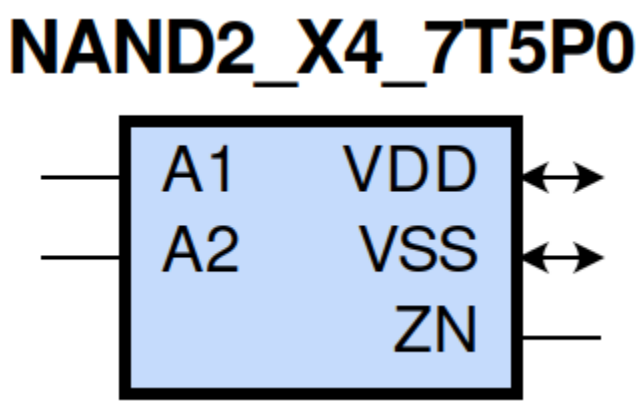

gf180mcu_fd_sc_mcu7t5v0__nand2_4 schematic

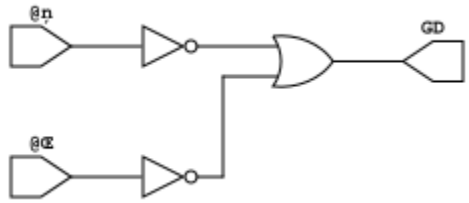

gf180mcu_fd_sc_mcu7t5v0__nand2_4 layout

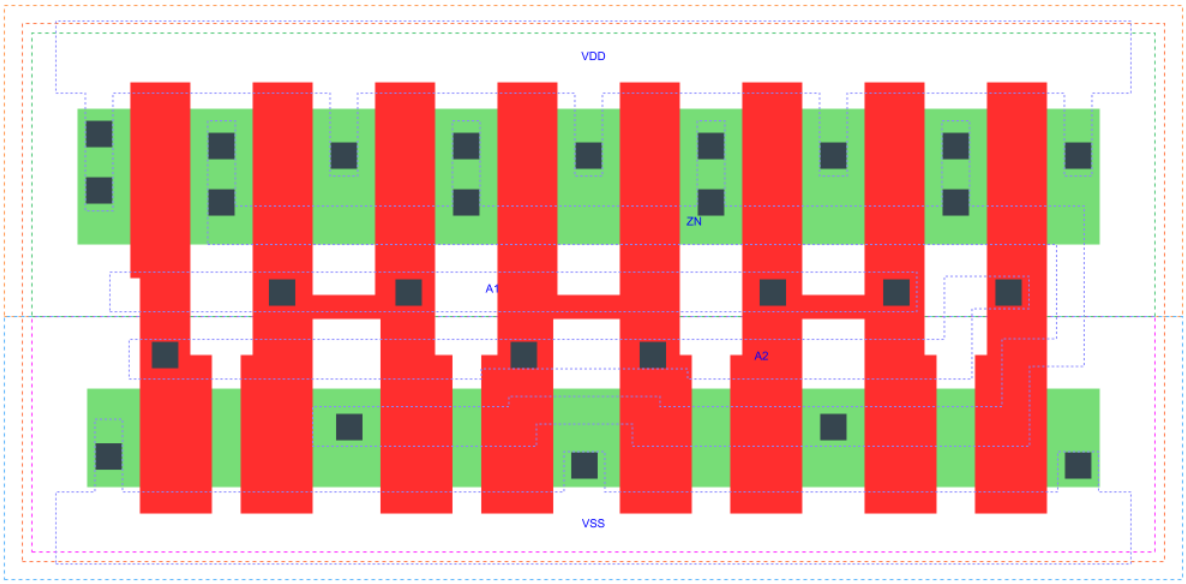

NAND2_X4 is a 2-input NAND, NAND(A1,A2), 4X drive strength

Attributes

Attribute	Value
area	35.123200 μm^2

OUTPUT FUNCTIONS

Output Pin	Function
ZN	((!A1)|(!A2))

TRUTH TABLE FOR ZN

A1	A2	ZN
0	?	1
?	0	1
1	1	0

FUNCTIONAL SCHEMATIC

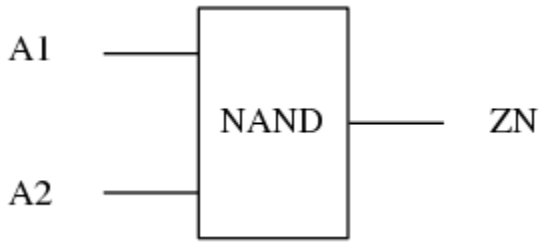

PIN CAPACITANCE (pf)

Pin	Type	Capacitance (pf)
A1	input	0.0191
A2	input	0.0193

DELAY AND OUTPUT TRANSITION TIME corresponding to min slew and load

Input Pin	Output	When Condition	Tin (ns)	Out Load (pf)	Delay (ns)	Tout (ns)
A1(HL)	ZN(LH)	A2	0.0100	0.0010	0.0524	0.0325
A1(LH)	ZN(HL)	A2	0.0100	0.0010	0.0505	0.0278
A2(HL)	ZN(LH)	A1	0.0100	0.0010	0.0706	0.0488
A2(LH)	ZN(HL)	A1	0.0100	0.0010	0.0616	0.0278

DYNAMIC ENERGY

Input Pin	When Condition	Tin (ns)	Output	Out Load (pf)	Energy (uW/MHz)
A1	A2	0.0100	ZN(LH)	0.0010	0.4191
A2	A1	0.0100	ZN(LH)	0.0010	0.5676
A1	A2	0.0100	ZN(HL)	0.0010	0.0076
A2	A1	0.0100	ZN(HL)	0.0010	0.0078
A2(LH)	!A1	0.0100	n/a	n/a	-0.1461
A1(LH)	!A2	0.0100	n/a	n/a	-0.1072
A2(HL)	!A1	0.0100	n/a	n/a	0.1629
A1(HL)	!A2	0.0100	n/a	n/a	0.1652

LEAKAGE POWER

When Condition	Power (nW)
!A1&!A2	0.1509
!A1&A2	0.1518
A1&!A2	0.3114
A1&A2	0.2615

gf180mcu_fd_sc_mcu7t5v0__nand3_1

gf180mcu_fd_sc_mcu7t5v0__nand3_1 symbol

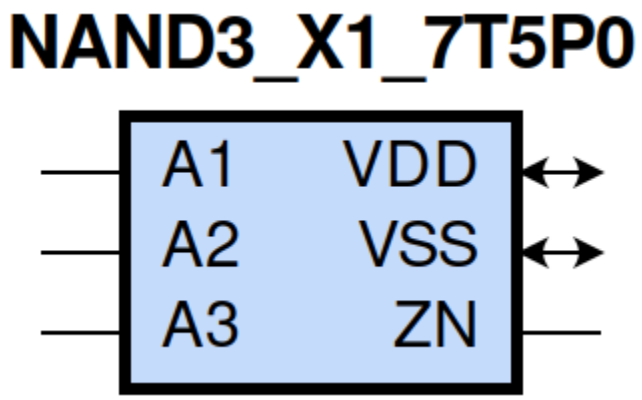

gf180mcu_fd_sc_mcu7t5v0__nand3_1 schematic

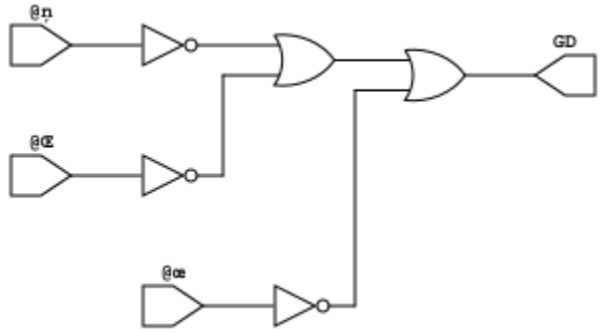

gf180mcu_fd_sc_mcu7t5v0__nand3_1 layout

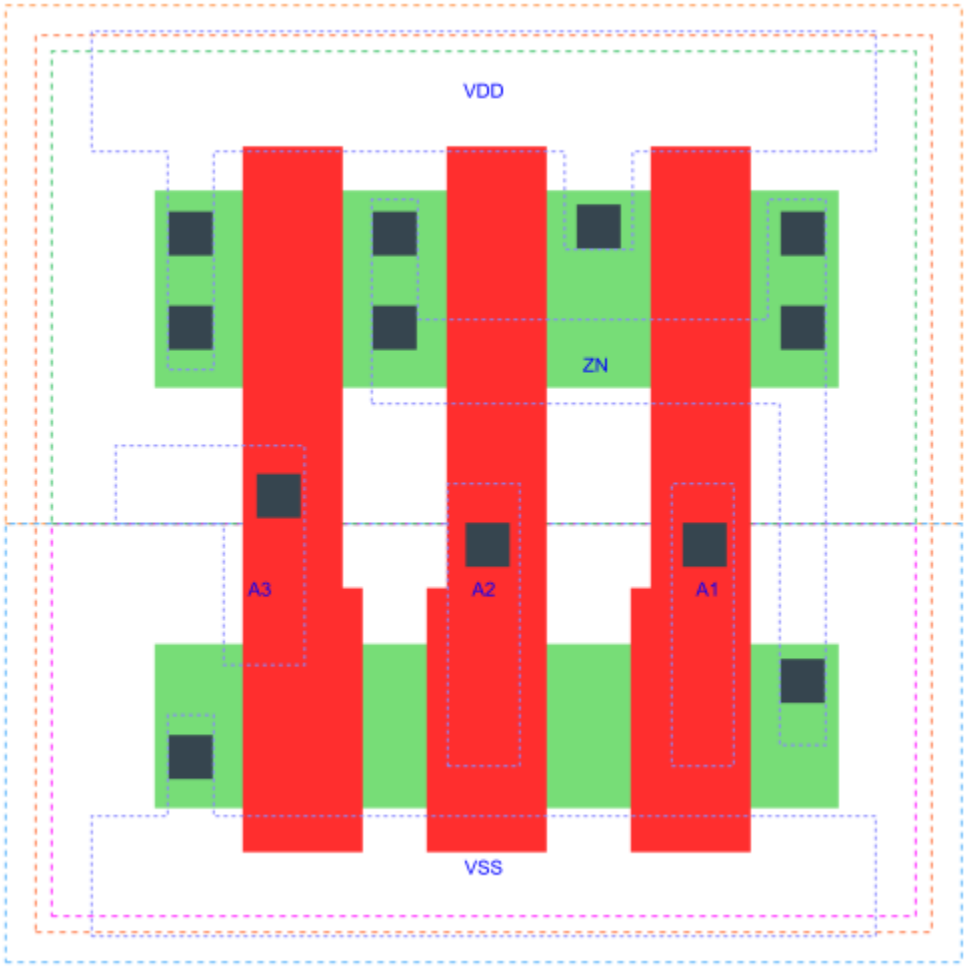

NAND3_X1 is a 3-input NAND, NAND(A1,A2,A3), 1X drive strength

Attributes

Attribute	Value
area	15.366400 μm^2

OUTPUT FUNCTIONS

Output Pin	Function
ZN	((!A1)|(!A2)|(!A3))

TRUTH TABLE FOR ZN

A1	A2	A3	ZN
0	?	?	1
?	0	?	1
?	?	0	1
1	1	1	0

FUNCTIONAL SCHEMATIC

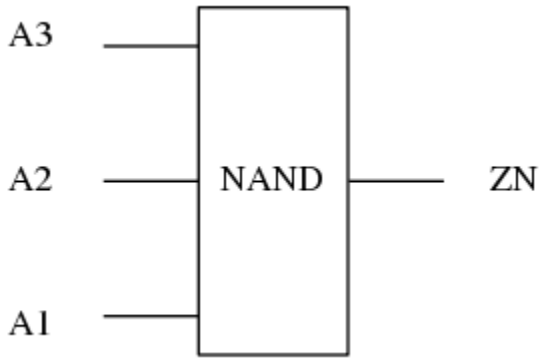

PIN CAPACITANCE (pf)

Pin	Type	Capacitance (pf)
A3	input	0.0043
A2	input	0.0042
A1	input	0.0044

DELAY AND OUTPUT TRANSITION TIME corresponding to min slew and load

Input Pin	Output	When Condition	Tin (ns)	Out Load (pf)	Delay (ns)	Tout (ns)
A3(LH)	ZN(HL)	A1&A2	0.0100	0.0010	0.1135	0.0588
A3(HL)	ZN(LH)	A1&A2	0.0100	0.0010	0.1224	0.0923
A2(HL)	ZN(LH)	A1&A3	0.0100	0.0010	0.1060	0.0754
A2(LH)	ZN(HL)	A1&A3	0.0100	0.0010	0.1027	0.0587
A1(HL)	ZN(LH)	A2&A3	0.0100	0.0010	0.0816	0.0555
A1(LH)	ZN(HL)	A2&A3	0.0100	0.0010	0.0818	0.0587

DYNAMIC ENERGY

Input Pin	When Condition	Tin (ns)	Output	Out Load (pf)	Energy (uW/MHz)
A1	A2&A3	0.0100	ZN(LH)	0.0010	0.1148
A2	A1&A3	0.0100	ZN(LH)	0.0010	0.1558
A3	A1&A2	0.0100	ZN(HL)	0.0010	0.0206
A1	A2&A3	0.0100	ZN(HL)	0.0010	0.0205
A2	A1&A3	0.0100	ZN(HL)	0.0010	0.0207
A3	A1&A2	0.0100	ZN(LH)	0.0010	0.1907
A3(LH)	!A1&!A2	0.0100	n/a	n/a	-0.0320
A3(LH)	!A1&A2	0.0100	n/a	n/a	-0.0319
A3(LH)	A1&!A2	0.0100	n/a	n/a	-0.0320
A2(LH)	!A1&!A3	0.0100	n/a	n/a	-0.0320
A2(LH)	!A1&A3	0.0100	n/a	n/a	-0.0319
A2(LH)	A1&!A3	0.0100	n/a	n/a	-0.0237
A1(LH)	!A2&!A3	0.0100	n/a	n/a	-0.0200
A1(LH)	!A2&A3	0.0100	n/a	n/a	-0.0201
A1(LH)	A2&!A3	0.0100	n/a	n/a	0.0202
A3(HL)	!A1&!A2	0.0100	n/a	n/a	0.0313
A3(HL)	!A1&A2	0.0100	n/a	n/a	0.0356
A3(HL)	A1&!A2	0.0100	n/a	n/a	0.0340
A2(HL)	!A1&!A3	0.0100	n/a	n/a	0.0443
A2(HL)	!A1&A3	0.0100	n/a	n/a	0.0388
A2(HL)	A1&!A3	0.0100	n/a	n/a	0.0359
A1(HL)	!A2&!A3	0.0100	n/a	n/a	0.0369
A1(HL)	!A2&A3	0.0100	n/a	n/a	0.0367
A1(HL)	A2&!A3	0.0100	n/a	n/a	0.0356

LEAKAGE POWER

When Condition	Power (nW)
!A1&!A2&!A3	0.0752
!A1&!A2&A3	0.0752
!A1&A2&!A3	0.0753
!A1&A2&A3	0.0754
A1&!A2&!A3	0.1152
A1&!A2&A3	0.1154
A1&A2&!A3	0.1545
A1&A2&A3	0.1291

gf180mcu_fd_sc_mcu7t5v0__nand3_2

gf180mcu_fd_sc_mcu7t5v0__nand3_2 symbol

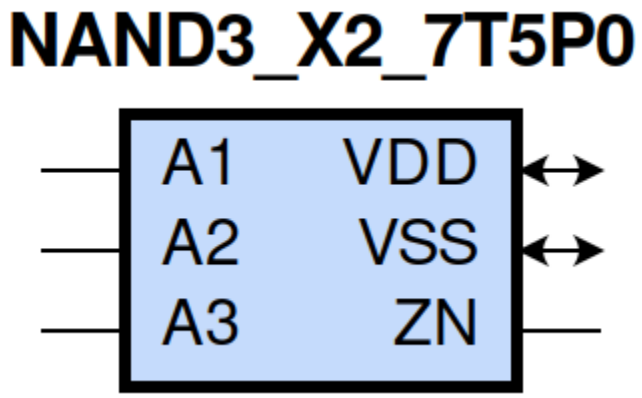

gf180mcu_fd_sc_mcu7t5v0__nand3_2 schematic

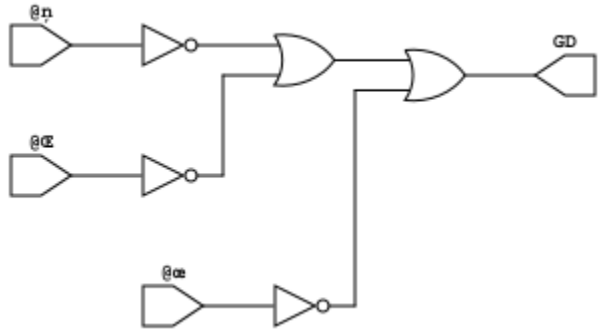

gf180mcu_fd_sc_mcu7t5v0__nand3_2 layout

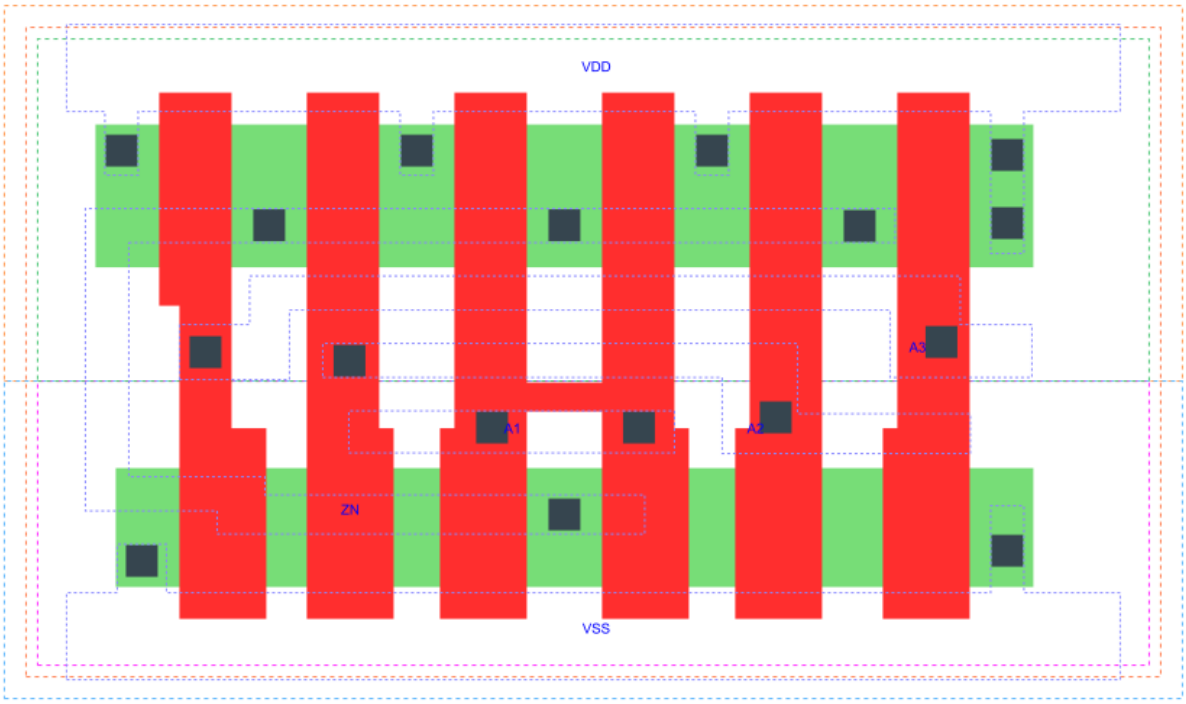

NAND3_X2 is a 3-input NAND, NAND(A1,A2,A3), 2X drive strength

Attributes

Attribute	Value
area	28.537600 μm^2

OUTPUT FUNCTIONS

Output Pin	Function
ZN	((!A1)|(!A2)|(!A3))

TRUTH TABLE FOR ZN

A1	A2	A3	ZN
0	?	?	1
?	0	?	1
?	?	0	1
1	1	1	0

FUNCTIONAL SCHEMATIC

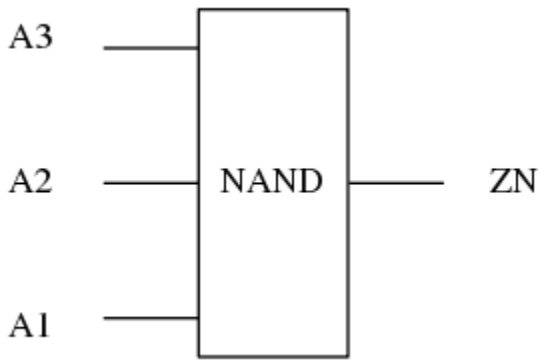

PIN CAPACITANCE (pf)

Pin	Type	Capacitance (pf)
A3	input	0.0097
A2	input	0.0093
A1	input	0.0087

DELAY AND OUTPUT TRANSITION TIME corresponding to min slew and load

Input Pin	Output	When Condition	Tin (ns)	Out Load (pf)	Delay (ns)	Tout (ns)
A3(LH)	ZN(HL)	A1&A2	0.0100	0.0010	0.1010	0.0486
A3(HL)	ZN(LH)	A1&A2	0.0100	0.0010	0.1096	0.0814
A2(HL)	ZN(LH)	A1&A3	0.0100	0.0010	0.0932	0.0644
A2(LH)	ZN(HL)	A1&A3	0.0100	0.0010	0.0900	0.0484
A1(HL)	ZN(LH)	A2&A3	0.0100	0.0010	0.0694	0.0452
A1(LH)	ZN(HL)	A2&A3	0.0100	0.0010	0.0700	0.0482

DYNAMIC ENERGY

Input Pin	When Condition	Tin (ns)	Output	Out Load (pf)	Energy (uW/MHz)
A1	A2&A3	0.0100	ZN(LH)	0.0010	0.2167
A2	A1&A3	0.0100	ZN(LH)	0.0010	0.2966
A3	A1&A2	0.0100	ZN(HL)	0.0010	0.0265
A1	A2&A3	0.0100	ZN(HL)	0.0010	0.0264
A2	A1&A3	0.0100	ZN(HL)	0.0010	0.0265
A3	A1&A2	0.0100	ZN(LH)	0.0010	0.3697
A3(LH)	!A1&!A2	0.0100	n/a	n/a	-0.0637
A3(LH)	!A1&A2	0.0100	n/a	n/a	-0.0635
A3(LH)	A1&!A2	0.0100	n/a	n/a	-0.0636
A2(LH)	!A1&!A3	0.0100	n/a	n/a	-0.0639
A2(LH)	!A1&A3	0.0100	n/a	n/a	-0.0635
A2(LH)	A1&!A3	0.0100	n/a	n/a	-0.0459
A1(LH)	!A2&!A3	0.0100	n/a	n/a	-0.0428
A1(LH)	!A2&A3	0.0100	n/a	n/a	-0.0428
A1(LH)	A2&!A3	0.0100	n/a	n/a	0.0386
A3(HL)	!A1&!A2	0.0100	n/a	n/a	0.0637
A3(HL)	!A1&A2	0.0100	n/a	n/a	0.0709
A3(HL)	A1&!A2	0.0100	n/a	n/a	0.0691
A2(HL)	!A1&!A3	0.0100	n/a	n/a	0.0884
A2(HL)	!A1&A3	0.0100	n/a	n/a	0.0774
A2(HL)	A1&!A3	0.0100	n/a	n/a	0.0718
A1(HL)	!A2&!A3	0.0100	n/a	n/a	0.0733
A1(HL)	!A2&A3	0.0100	n/a	n/a	0.0732
A1(HL)	A2&!A3	0.0100	n/a	n/a	0.0724

LEAKAGE POWER

When Condition	Power (nW)
!A1&!A2&!A3	0.1004
!A1&!A2&A3	0.1004
!A1&A2&!A3	0.1006
!A1&A2&A3	0.1009
A1&!A2&!A3	0.1804
A1&!A2&A3	0.1807
A1&A2&!A3	0.2590
A1&A2&A3	0.2081

gf180mcu_fd_sc_mcu7t5v0__nand3_4

gf180mcu_fd_sc_mcu7t5v0__nand3_4 symbol

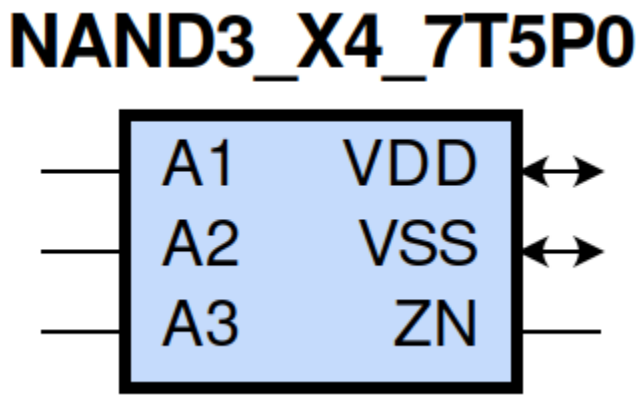

gf180mcu_fd_sc_mcu7t5v0__nand3_4 schematic

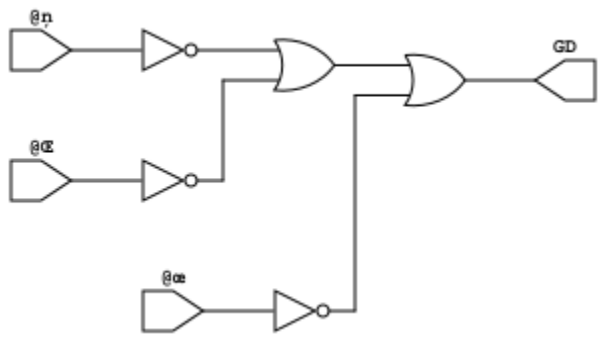

gf180mcu_fd_sc_mcu7t5v0__nand3_4 layout

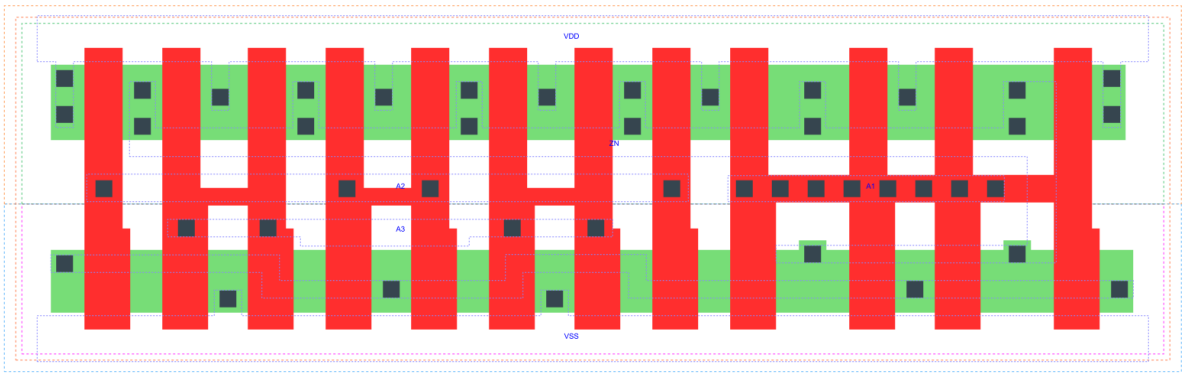

NAND3_X4 is a 3-input NAND, NAND(A1,A2,A3), 4X drive strength

Attributes

Attribute	Value
area	57.075200 μm^2

OUTPUT FUNCTIONS

Output Pin	Function
ZN	((!A1)|(!A2)|(!A3))

TRUTH TABLE FOR ZN

A1	A2	A3	ZN
0	?	?	1
?	0	?	1
?	?	0	1
1	1	1	0

FUNCTIONAL SCHEMATIC

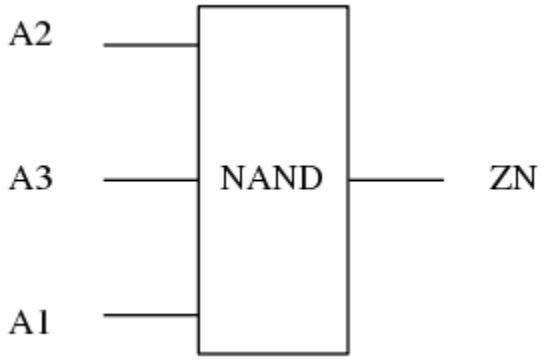

PIN CAPACITANCE (pf)

Pin	Type	Capacitance (pf)
A2	input	0.0182
A3	input	0.0175
A1	input	0.0170

DELAY AND OUTPUT TRANSITION TIME corresponding to min slew and load

Input Pin	Output	When Condition	Tin (ns)	Out Load (pf)	Delay (ns)	Tout (ns)
A2(HL)	ZN(LH)	A1&A3	0.0100	0.0010	0.1076	0.0761
A2(LH)	ZN(HL)	A1&A3	0.0100	0.0010	0.1028	0.0522
A3(LH)	ZN(HL)	A1&A2	0.0100	0.0010	0.1141	0.0524
A3(HL)	ZN(LH)	A1&A2	0.0100	0.0010	0.1233	0.0931
A1(HL)	ZN(LH)	A2&A3	0.0100	0.0010	0.0711	0.0471
A1(LH)	ZN(HL)	A2&A3	0.0100	0.0010	0.0686	0.0506

DYNAMIC ENERGY

Input Pin	When Condition	Tin (ns)	Output	Out Load (pf)	Energy (uW/MHz)
A1	A2&A3	0.0100	ZN(LH)	0.0010	0.4523
A2	A1&A3	0.0100	ZN(LH)	0.0010	0.7119
A3	A1&A2	0.0100	ZN(HL)	0.0010	0.0766
A1	A2&A3	0.0100	ZN(HL)	0.0010	0.0767
A2	A1&A3	0.0100	ZN(HL)	0.0010	0.0763
A3	A1&A2	0.0100	ZN(LH)	0.0010	0.8597
A3(LH)	!A1&!A2	0.0100	n/a	n/a	-0.1270
A3(LH)	!A1&A2	0.0100	n/a	n/a	-0.1266
A3(LH)	A1&!A2	0.0100	n/a	n/a	-0.1270
A2(LH)	!A1&!A3	0.0100	n/a	n/a	-0.1272
A2(LH)	!A1&A3	0.0100	n/a	n/a	-0.1266
A2(LH)	A1&!A3	0.0100	n/a	n/a	-0.0927
A1(LH)	!A2&!A3	0.0100	n/a	n/a	0.0080
A1(LH)	!A2&A3	0.0100	n/a	n/a	0.0081
A1(LH)	A2&!A3	0.0100	n/a	n/a	0.1753
A3(HL)	!A1&!A2	0.0100	n/a	n/a	0.1273
A3(HL)	!A1&A2	0.0100	n/a	n/a	0.1355
A3(HL)	A1&!A2	0.0100	n/a	n/a	0.1338
A2(HL)	!A1&!A3	0.0100	n/a	n/a	0.1849
A2(HL)	!A1&A3	0.0100	n/a	n/a	0.1564
A2(HL)	A1&!A3	0.0100	n/a	n/a	0.1387
A1(HL)	!A2&!A3	0.0100	n/a	n/a	0.1462
A1(HL)	!A2&A3	0.0100	n/a	n/a	0.1460
A1(HL)	A2&!A3	0.0100	n/a	n/a	0.1447

LEAKAGE POWER

When Condition	Power (nW)
!A1&!A2&!A3	0.1509
!A1&!A2&A3	0.1509
!A1&A2&!A3	0.1511
!A1&A2&A3	0.1518
A1&!A2&!A3	0.3102
A1&!A2&A3	0.3108
A1&A2&!A3	0.4675
A1&A2&A3	0.3662

gf180mcu_fd_sc_mcu7t5v0__nand4_1

gf180mcu_fd_sc_mcu7t5v0__nand4_1 symbol

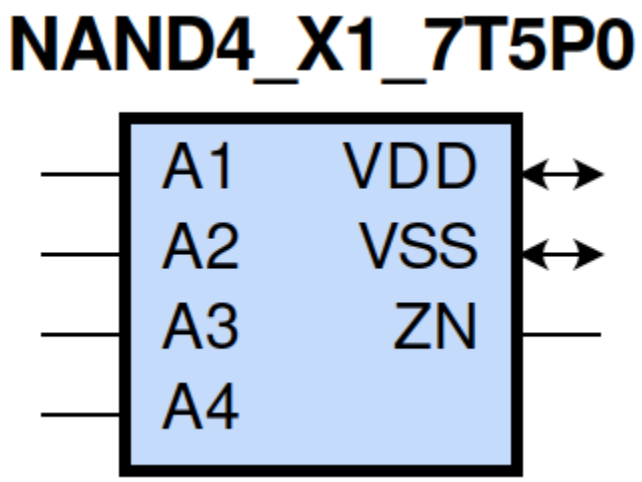

gf180mcu_fd_sc_mcu7t5v0__nand4_1 schematic

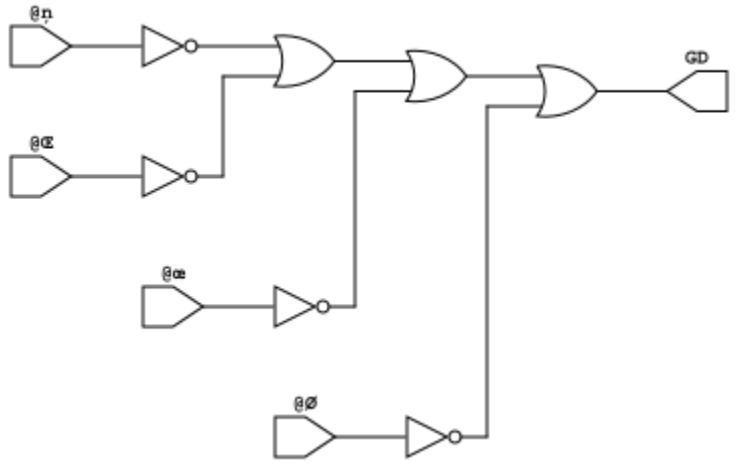

gf180mcu_fd_sc_mcu7t5v0__nand4_1 layout

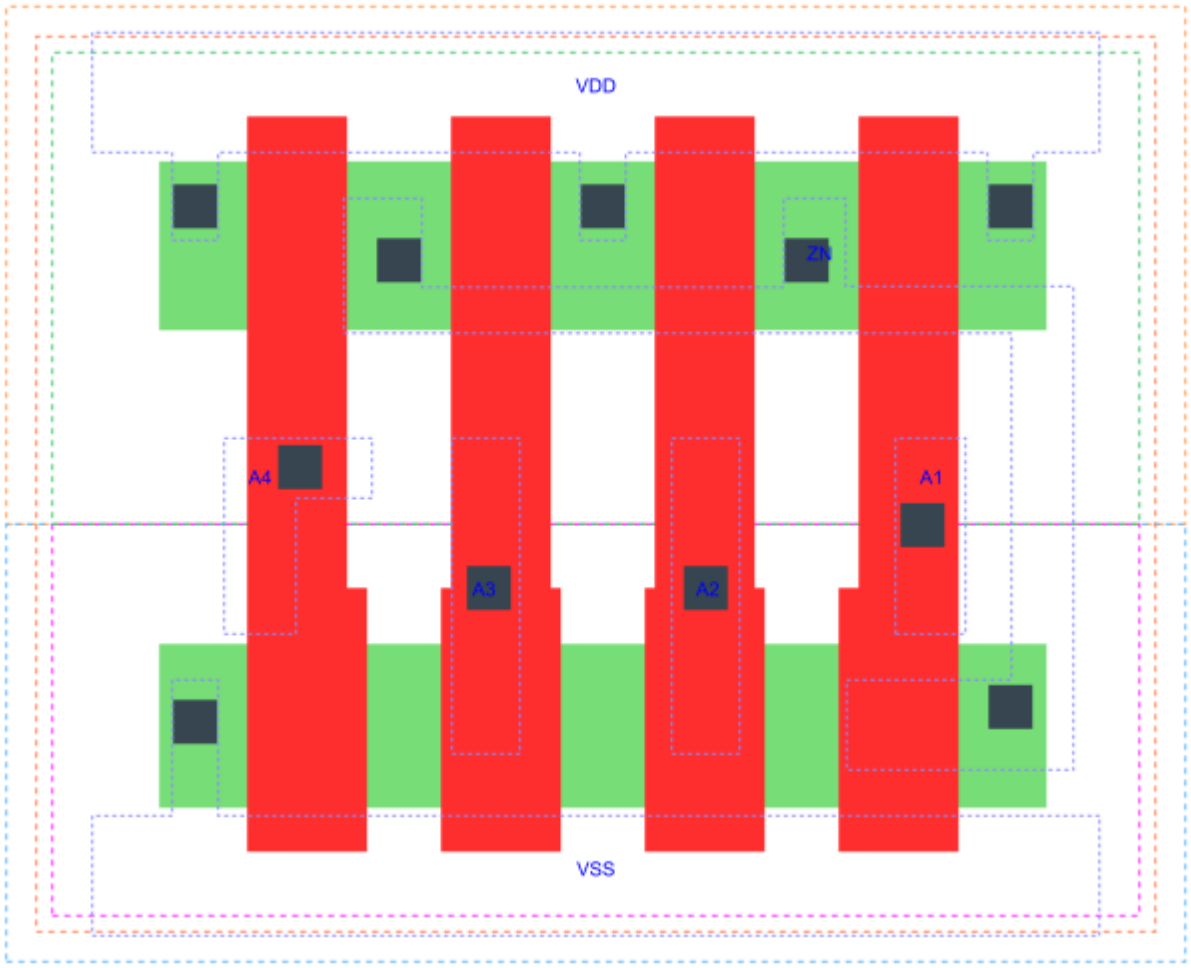

NAND4_X1 is a 4-input NAND, NAND(A1,A2,A3,A4), 1X drive strength

Attributes

Attribute	Value
area	19.756800 μm^2

OUTPUT FUNCTIONS

Output Pin	Function
ZN	((!A1)|(!A2)|(!A3)|(!A4))

TRUTH TABLE FOR ZN

A1	A2	A3	A4	ZN
0	?	?	?	1
?	0	?	?	1
?	?	0	?	1
?	?	?	0	1
1	1	1	1	0

FUNCTIONAL SCHEMATIC

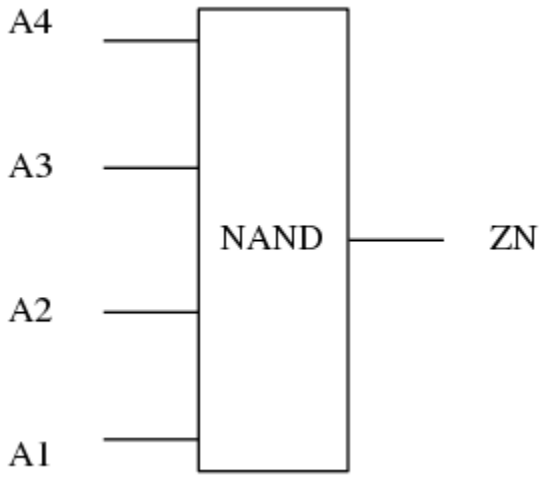

PIN CAPACITANCE (pf)

Pin	Type	Capacitance (pf)
A4	input	0.0039
A3	input	0.0039
A2	input	0.0040
A1	input	0.0041

DELAY AND OUTPUT TRANSITION TIME corresponding to min slew and load

Input Pin	Output	When Condition	Tin (ns)	Out Load (pf)	Delay (ns)	Tout (ns)
A4(LH)	ZN(HL)	A1&A2&A3	0.0100	0.0010	0.1569	0.0827
A4(HL)	ZN(LH)	A1&A2&A3	0.0100	0.0010	0.1686	0.1315
A3(LH)	ZN(HL)	A1&A2&A4	0.0100	0.0010	0.1460	0.0828
A3(HL)	ZN(LH)	A1&A2&A4	0.0100	0.0010	0.1519	0.1121
A2(HL)	ZN(LH)	A1&A3&A4	0.0100	0.0010	0.1274	0.0913
A2(LH)	ZN(HL)	A1&A3&A4	0.0100	0.0010	0.1260	0.0826
A1(HL)	ZN(LH)	A2&A3&A4	0.0100	0.0010	0.0987	0.0684
A1(LH)	ZN(HL)	A2&A3&A4	0.0100	0.0010	0.0964	0.0815

DYNAMIC ENERGY

Input Pin	When Condition	Tin (ns)	Output	Out Load (pf)	Energy (uW/MHz)
A1	A2&A3&A4	0.0100	ZN(LH)	0.0010	0.1208
A4	A1&A2&A3	0.0100	ZN(HL)	0.0010	0.0218
A2	A1&A3&A4	0.0100	ZN(LH)	0.0010	0.1616
A3	A1&A2&A4	0.0100	ZN(HL)	0.0010	0.0218
A1	A2&A3&A4	0.0100	ZN(HL)	0.0010	0.0218
A2	A1&A3&A4	0.0100	ZN(HL)	0.0010	0.0218
A4	A1&A2&A3	0.0100	ZN(LH)	0.0010	0.2381
A3	A1&A2&A4	0.0100	ZN(LH)	0.0010	0.2017
A3(LH)	!A1&!A2&!A4	0.0100	n/a	n/a	-0.0275
A3(LH)	!A1&!A2&A4	0.0100	n/a	n/a	-0.0273
A3(LH)	!A1&A2&!A4	0.0100	n/a	n/a	-0.0274
A3(LH)	!A1&A2&A4	0.0100	n/a	n/a	-0.0272
A3(LH)	A1&!A2&!A4	0.0100	n/a	n/a	-0.0275
A3(LH)	A1&!A2&A4	0.0100	n/a	n/a	-0.0273
A3(LH)	A1&A2&!A4	0.0100	n/a	n/a	-0.0198
A2(LH)	!A1&!A3&!A4	0.0100	n/a	n/a	-0.0274
A2(LH)	!A1&!A3&A4	0.0100	n/a	n/a	-0.0274
A2(LH)	!A1&A3&!A4	0.0100	n/a	n/a	-0.0274
A2(LH)	!A1&A3&A4	0.0100	n/a	n/a	-0.0272
A2(LH)	A1&!A3&!A4	0.0100	n/a	n/a	-0.0176
A2(LH)	A1&!A3&A4	0.0100	n/a	n/a	-0.0176
A2(LH)	A1&A3&!A4	0.0100	n/a	n/a	0.0230
A1(LH)	!A2&!A3&!A4	0.0100	n/a	n/a	-0.0163
A1(LH)	!A2&!A3&A4	0.0100	n/a	n/a	-0.0163
A1(LH)	!A2&A3&!A4	0.0100	n/a	n/a	-0.0163
A1(LH)	!A2&A3&A4	0.0100	n/a	n/a	-0.0163
A1(LH)	A2&!A3&!A4	0.0100	n/a	n/a	0.0253
A1(LH)	A2&!A3&A4	0.0100	n/a	n/a	0.0254
A1(LH)	A2&A3&!A4	0.0100	n/a	n/a	0.0658
A3(HL)	!A1&!A2&!A4	0.0100	n/a	n/a	0.0326
A3(HL)	!A1&!A2&A4	0.0100	n/a	n/a	0.0287
A3(HL)	!A1&A2&!A4	0.0100	n/a	n/a	0.0418
A3(HL)	!A1&A2&A4	0.0100	n/a	n/a	0.0340
A3(HL)	A1&!A2&!A4	0.0100	n/a	n/a	0.0368

continues on next page

Table 64 – continued from previous page

A3(HL)	A1&!A2&A4	0.0100	n/a	n/a	0.0323
A3(HL)	A1&A2&!A4	0.0100	n/a	n/a	0.0303
A2(HL)	!A1&!A3&!A4	0.0100	n/a	n/a	0.0409
A2(HL)	!A1&!A3&A4	0.0100	n/a	n/a	0.0397
A2(HL)	!A1&A3&!A4	0.0100	n/a	n/a	0.0405
A2(HL)	!A1&A3&A4	0.0100	n/a	n/a	0.0349
A2(HL)	A1&!A3&!A4	0.0100	n/a	n/a	0.0313
A2(HL)	A1&!A3&A4	0.0100	n/a	n/a	0.0313
A2(HL)	A1&A3&!A4	0.0100	n/a	n/a	0.0314
A4(LH)	!A1&!A2&!A3	0.0100	n/a	n/a	-0.0274
A4(LH)	!A1&!A2&A3	0.0100	n/a	n/a	-0.0273
A4(LH)	!A1&A2&!A3	0.0100	n/a	n/a	-0.0274
A4(LH)	!A1&A2&A3	0.0100	n/a	n/a	-0.0273
A4(LH)	A1&!A2&!A3	0.0100	n/a	n/a	-0.0274
A4(LH)	A1&!A2&A3	0.0100	n/a	n/a	-0.0274
A4(LH)	A1&A2&!A3	0.0100	n/a	n/a	-0.0274
A1(HL)	!A2&!A3&!A4	0.0100	n/a	n/a	0.0322
A1(HL)	!A2&!A3&A4	0.0100	n/a	n/a	0.0321
A1(HL)	!A2&A3&!A4	0.0100	n/a	n/a	0.0322
A1(HL)	!A2&A3&A4	0.0100	n/a	n/a	0.0321
A1(HL)	A2&!A3&!A4	0.0100	n/a	n/a	0.0317
A1(HL)	A2&!A3&A4	0.0100	n/a	n/a	0.0317
A1(HL)	A2&A3&!A4	0.0100	n/a	n/a	0.0316
A4(HL)	!A1&!A2&!A3	0.0100	n/a	n/a	0.0272
A4(HL)	!A1&!A2&A3	0.0100	n/a	n/a	0.0275
A4(HL)	!A1&A2&!A3	0.0100	n/a	n/a	0.0272
A4(HL)	!A1&A2&A3	0.0100	n/a	n/a	0.0279
A4(HL)	A1&!A2&!A3	0.0100	n/a	n/a	0.0272
A4(HL)	A1&!A2&A3	0.0100	n/a	n/a	0.0294
A4(HL)	A1&A2&!A3	0.0100	n/a	n/a	0.0290

LEAKAGE POWER

When Condition	Power (nW)
!A1&!A2&!A3&!A4	0.0752
!A1&!A2&!A3&A4	0.0752
!A1&!A2&A3&!A4	0.0752
!A1&!A2&A3&A4	0.0752
!A1&A2&!A3&!A4	0.0753
!A1&A2&!A3&A4	0.0753
!A1&A2&A3&!A4	0.0753
!A1&A2&A3&A4	0.0754
A1&!A2&!A3&!A4	0.1152
A1&!A2&!A3&A4	0.1152
A1&!A2&A3&!A4	0.1152
A1&!A2&A3&A4	0.1154
A1&A2&!A3&!A4	0.1544
A1&A2&!A3&A4	0.1545
A1&A2&A3&!A4	0.1933
A1&A2&A3&A4	0.1551

gf180mcu_fd_sc_mcu7t5v0__nand4_2

gf180mcu_fd_sc_mcu7t5v0__nand4_2 symbol

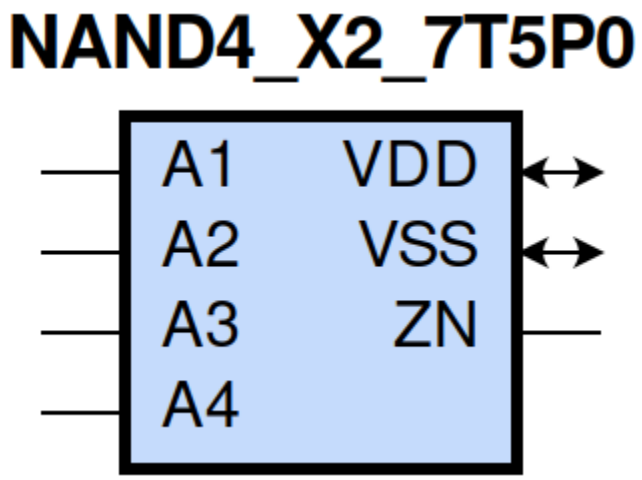

gf180mcu_fd_sc_mcu7t5v0__nand4_2 schematic

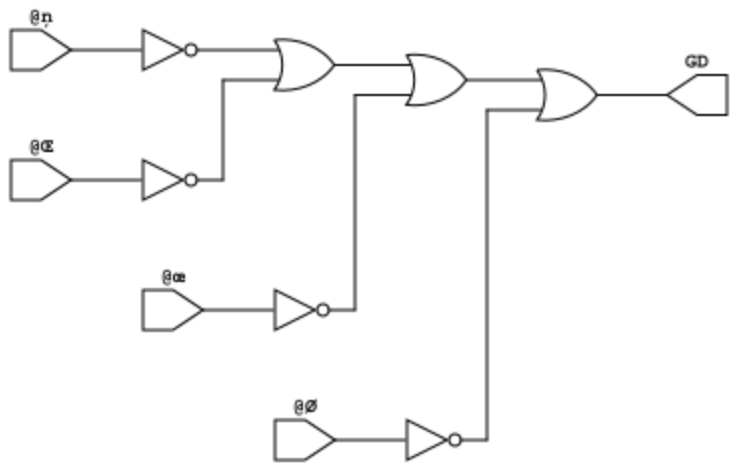

gf180mcu_fd_sc_mcu7t5v0__nand4_2 layout

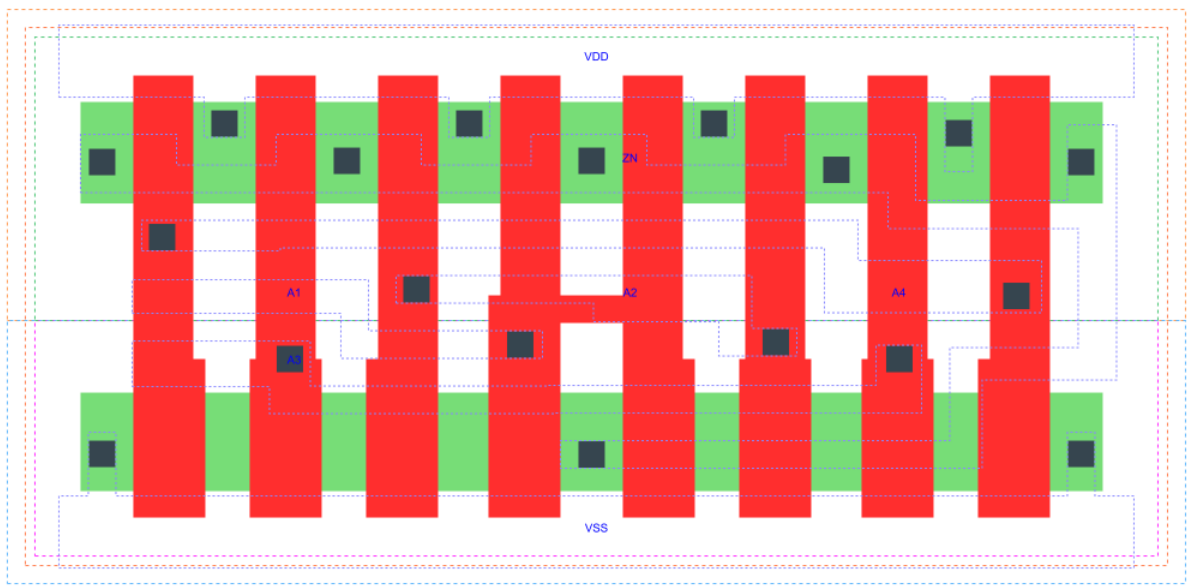

NAND4_X2 is a 4-input NAND, NAND(A1,A2,A3,A4), 2X drive strength

Attributes

Attribute	Value
area	35.123200 μm^2

OUTPUT FUNCTIONS

Output Pin	Function
ZN	((!A1)|(!A2)|(!A3)|(!A4))

TRUTH TABLE FOR ZN

A1	A2	A3	A4	ZN
0	?	?	?	1
?	0	?	?	1
?	?	0	?	1
?	?	?	0	1
1	1	1	1	0

FUNCTIONAL SCHEMATIC

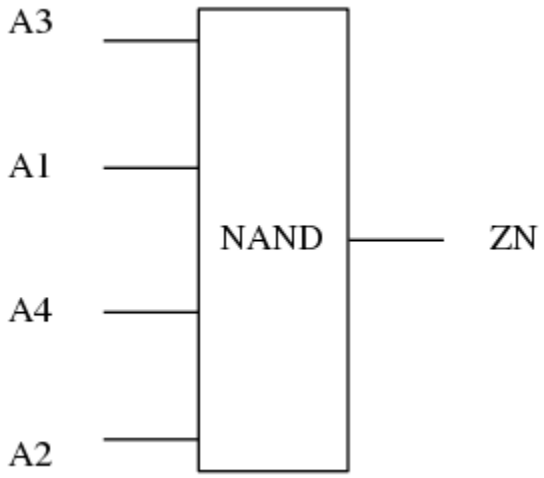

PIN CAPACITANCE (pf)

Pin	Type	Capacitance (pf)
A3	input	0.0092
A1	input	0.0088
A4	input	0.0098
A2	input	0.0085

DELAY AND OUTPUT TRANSITION TIME corresponding to min slew and load

Input Pin	Output	When Condition	Tin (ns)	Out Load (pf)	Delay (ns)	Tout (ns)
A3(LH)	ZN(HL)	A1&A2&A4	0.0100	0.0010	0.1478	0.0837
A3(HL)	ZN(LH)	A1&A2&A4	0.0100	0.0010	0.1529	0.1132
A1(HL)	ZN(LH)	A2&A3&A4	0.0100	0.0010	0.0994	0.0694
A1(LH)	ZN(HL)	A2&A3&A4	0.0100	0.0010	0.0980	0.0828
A4(LH)	ZN(HL)	A1&A2&A3	0.0100	0.0010	0.1588	0.0837
A4(HL)	ZN(LH)	A1&A2&A3	0.0100	0.0010	0.1695	0.1328
A2(HL)	ZN(LH)	A1&A3&A4	0.0100	0.0010	0.1286	0.0925
A2(LH)	ZN(HL)	A1&A3&A4	0.0100	0.0010	0.1281	0.0838

DYNAMIC ENERGY

Input Pin	When Condition	Tin (ns)	Output	Out Load (pf)	Energy (uW/MHz)
A1	A2&A3&A4	0.0100	ZN(LH)	0.0010	0.2581
A4	A1&A2&A3	0.0100	ZN(HL)	0.0010	0.0562
A2	A1&A3&A4	0.0100	ZN(LH)	0.0010	0.3407
A3	A1&A2&A4	0.0100	ZN(HL)	0.0010	0.0562
A1	A2&A3&A4	0.0100	ZN(HL)	0.0010	0.0563
A2	A1&A3&A4	0.0100	ZN(HL)	0.0010	0.0562
A4	A1&A2&A3	0.0100	ZN(LH)	0.0010	0.4937
A3	A1&A2&A4	0.0100	ZN(LH)	0.0010	0.4205
A3(LH)	!A1&!A2&!A4	0.0100	n/a	n/a	-0.0549
A3(LH)	!A1&!A2&A4	0.0100	n/a	n/a	-0.0543
A3(LH)	!A1&A2&!A4	0.0100	n/a	n/a	-0.0546
A3(LH)	!A1&A2&A4	0.0100	n/a	n/a	-0.0543
A3(LH)	A1&!A2&!A4	0.0100	n/a	n/a	-0.0547
A3(LH)	A1&!A2&A4	0.0100	n/a	n/a	-0.0544
A3(LH)	A1&A2&!A4	0.0100	n/a	n/a	-0.0389
A2(LH)	!A1&!A3&!A4	0.0100	n/a	n/a	-0.0549
A2(LH)	!A1&!A3&A4	0.0100	n/a	n/a	-0.0547
A2(LH)	!A1&A3&!A4	0.0100	n/a	n/a	-0.0545
A2(LH)	!A1&A3&A4	0.0100	n/a	n/a	-0.0543
A2(LH)	A1&!A3&!A4	0.0100	n/a	n/a	-0.0357
A2(LH)	A1&!A3&A4	0.0100	n/a	n/a	-0.0357
A2(LH)	A1&A3&!A4	0.0100	n/a	n/a	0.0460
A1(LH)	!A2&!A3&!A4	0.0100	n/a	n/a	-0.0313
A1(LH)	!A2&!A3&A4	0.0100	n/a	n/a	-0.0313
A1(LH)	!A2&A3&!A4	0.0100	n/a	n/a	-0.0313
A1(LH)	!A2&A3&A4	0.0100	n/a	n/a	-0.0313
A1(LH)	A2&!A3&!A4	0.0100	n/a	n/a	0.0513
A1(LH)	A2&!A3&A4	0.0100	n/a	n/a	0.0514
A1(LH)	A2&A3&!A4	0.0100	n/a	n/a	0.1328
A3(HL)	!A1&!A2&!A4	0.0100	n/a	n/a	0.0652

continues on next page

Table 65 – continued from previous page

A3(HL)	!A1&!A2&A4	0.0100	n/a	n/a	0.0574
A3(HL)	!A1&A2&!A4	0.0100	n/a	n/a	0.0836
A3(HL)	!A1&A2&A4	0.0100	n/a	n/a	0.0679
A3(HL)	A1&!A2&!A4	0.0100	n/a	n/a	0.0736
A3(HL)	A1&!A2&A4	0.0100	n/a	n/a	0.0645
A3(HL)	A1&A2&!A4	0.0100	n/a	n/a	0.0605
A2(HL)	!A1&!A3&!A4	0.0100	n/a	n/a	0.0819
A2(HL)	!A1&!A3&A4	0.0100	n/a	n/a	0.0795
A2(HL)	!A1&A3&!A4	0.0100	n/a	n/a	0.0810
A2(HL)	!A1&A3&A4	0.0100	n/a	n/a	0.0698
A2(HL)	A1&!A3&!A4	0.0100	n/a	n/a	0.0626
A2(HL)	A1&!A3&A4	0.0100	n/a	n/a	0.0626
A2(HL)	A1&A3&!A4	0.0100	n/a	n/a	0.0627
A4(LH)	!A1&!A2&!A3	0.0100	n/a	n/a	-0.0545
A4(LH)	!A1&!A2&A3	0.0100	n/a	n/a	-0.0543
A4(LH)	!A1&A2&!A3	0.0100	n/a	n/a	-0.0545
A4(LH)	!A1&A2&A3	0.0100	n/a	n/a	-0.0542
A4(LH)	A1&!A2&!A3	0.0100	n/a	n/a	-0.0546
A4(LH)	A1&!A2&A3	0.0100	n/a	n/a	-0.0543
A4(LH)	A1&A2&!A3	0.0100	n/a	n/a	-0.0545
A1(HL)	!A2&!A3&!A4	0.0100	n/a	n/a	0.0642
A1(HL)	!A2&!A3&A4	0.0100	n/a	n/a	0.0642
A1(HL)	!A2&A3&!A4	0.0100	n/a	n/a	0.0642
A1(HL)	!A2&A3&A4	0.0100	n/a	n/a	0.0640
A1(HL)	A2&!A3&!A4	0.0100	n/a	n/a	0.0633
A1(HL)	A2&!A3&A4	0.0100	n/a	n/a	0.0633
A1(HL)	A2&A3&!A4	0.0100	n/a	n/a	0.0633
A4(HL)	!A1&!A2&!A3	0.0100	n/a	n/a	0.0543
A4(HL)	!A1&!A2&A3	0.0100	n/a	n/a	0.0547
A4(HL)	!A1&A2&!A3	0.0100	n/a	n/a	0.0543
A4(HL)	!A1&A2&A3	0.0100	n/a	n/a	0.0556
A4(HL)	A1&!A2&!A3	0.0100	n/a	n/a	0.0543
A4(HL)	A1&!A2&A3	0.0100	n/a	n/a	0.0585
A4(HL)	A1&A2&!A3	0.0100	n/a	n/a	0.0578

LEAKAGE POWER

When Condition	Power (nW)
!A1&!A2&!A3&!A4	0.1004
!A1&!A2&!A3&A4	0.1004
!A1&!A2&A3&!A4	0.1004
!A1&!A2&A3&A4	0.1004
!A1&A2&!A3&!A4	0.1006
!A1&A2&!A3&A4	0.1006
!A1&A2&A3&!A4	0.1006
!A1&A2&A3&A4	0.1009
A1&!A2&!A3&!A4	0.1804
A1&!A2&!A3&A4	0.1804
A1&!A2&A3&!A4	0.1805
A1&!A2&A3&A4	0.1807
A1&A2&!A3&!A4	0.2587
A1&A2&!A3&A4	0.2590
A1&A2&A3&!A4	0.3366
A1&A2&A3&A4	0.2601

gf180mcu_fd_sc_mcu7t5v0__nand4_4

gf180mcu_fd_sc_mcu7t5v0__nand4_4 symbol

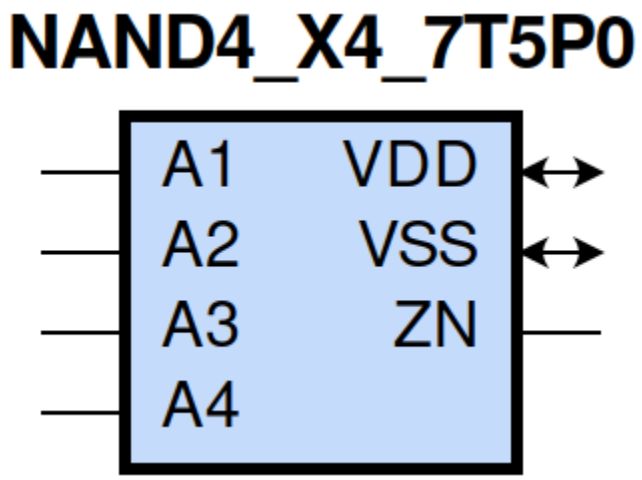

gf180mcu_fd_sc_mcu7t5v0__nand4_4 schematic

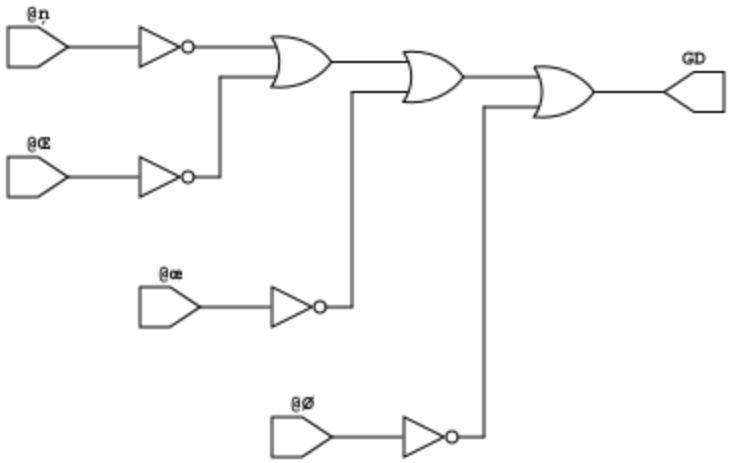

gf180mcu_fd_sc_mcu7t5v0__nand4_4 layout

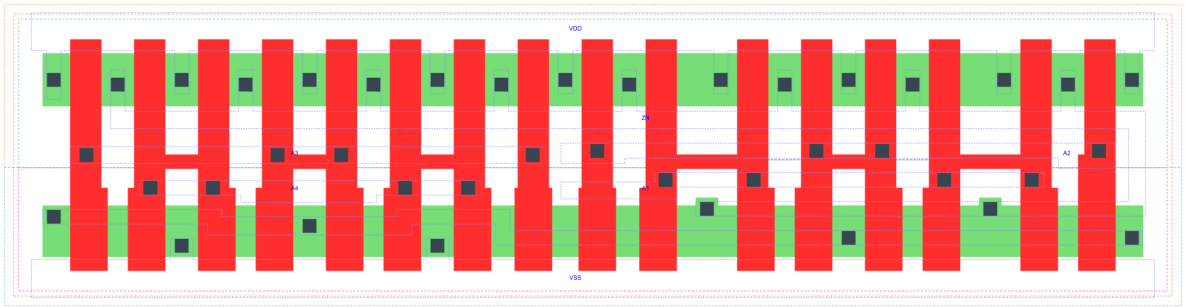

NAND4_X4 is a 4-input NAND, NAND(A1,A2,A3,A4), 4X drive strength

Attributes

Attribute	Value
area	70.246400 μm^2

OUTPUT FUNCTIONS

Output Pin	Function
ZN	((!A1)|(!A2)|(!A3)|(!A4))

TRUTH TABLE FOR ZN

A1	A2	A3	A4	ZN
0	?	?	?	1
?	0	?	?	1
?	?	0	?	1
?	?	?	0	1
1	1	1	1	0

FUNCTIONAL SCHEMATIC

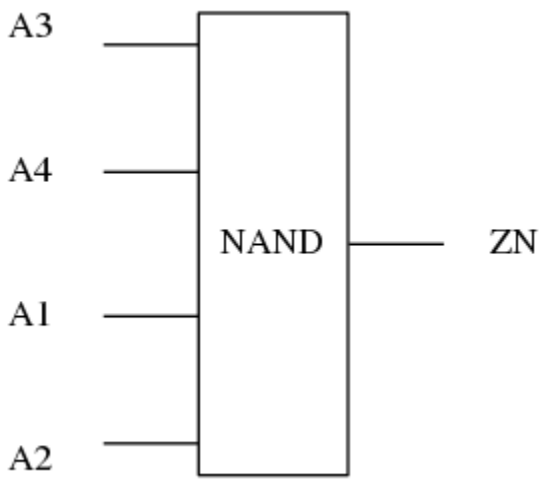

PIN CAPACITANCE (pf)

Pin	Type	Capacitance (pf)
A3	input	0.0168
A4	input	0.0164
A1	input	0.0175
A2	input	0.0176

DELAY AND OUTPUT TRANSITION TIME corresponding to min slew and load

Input Pin	Output	When Condition	Tin (ns)	Out Load (pf)	Delay (ns)	Tout (ns)
A3(LH)	ZN(HL)	A1&A2&A4	0.0100	0.0010	0.1494	0.0764
A3(HL)	ZN(LH)	A1&A2&A4	0.0100	0.0010	0.1563	0.1166
A4(LH)	ZN(HL)	A1&A2&A3	0.0100	0.0010	0.1601	0.0763
A4(HL)	ZN(LH)	A1&A2&A3	0.0100	0.0010	0.1700	0.1350
A1(HL)	ZN(LH)	A2&A3&A4	0.0100	0.0010	0.0898	0.0609
A1(LH)	ZN(HL)	A2&A3&A4	0.0100	0.0010	0.0846	0.0729
A2(HL)	ZN(LH)	A1&A3&A4	0.0100	0.0010	0.1176	0.0835
A2(LH)	ZN(HL)	A1&A3&A4	0.0100	0.0010	0.1136	0.0754

DYNAMIC ENERGY

Input Pin	When Condition	Tin (ns)	Output	Out Load (pf)	Energy (uW/MHz)
A1	A2&A3&A4	0.0100	ZN(LH)	0.0010	0.4928
A4	A1&A2&A3	0.0100	ZN(HL)	0.0010	0.0866
A2	A1&A3&A4	0.0100	ZN(LH)	0.0010	0.6530
A3	A1&A2&A4	0.0100	ZN(HL)	0.0010	0.0868
A1	A2&A3&A4	0.0100	ZN(HL)	0.0010	0.0869
A2	A1&A3&A4	0.0100	ZN(HL)	0.0010	0.0867
A4	A1&A2&A3	0.0100	ZN(LH)	0.0010	1.0653
A3	A1&A2&A4	0.0100	ZN(LH)	0.0010	0.9248
A3(LH)	!A1&!A2&!A4	0.0100	n/a	n/a	-0.1092
A3(LH)	!A1&!A2&A4	0.0100	n/a	n/a	-0.1083
A3(LH)	!A1&A2&!A4	0.0100	n/a	n/a	-0.1087
A3(LH)	!A1&A2&A4	0.0100	n/a	n/a	-0.1083
A3(LH)	A1&!A2&!A4	0.0100	n/a	n/a	-0.1089
A3(LH)	A1&!A2&A4	0.0100	n/a	n/a	-0.1084
A3(LH)	A1&A2&!A4	0.0100	n/a	n/a	-0.0880
A2(LH)	!A1&!A3&!A4	0.0100	n/a	n/a	-0.1090
A2(LH)	!A1&!A3&A4	0.0100	n/a	n/a	-0.1089
A2(LH)	!A1&A3&!A4	0.0100	n/a	n/a	-0.1088
A2(LH)	!A1&A3&A4	0.0100	n/a	n/a	-0.1082
A2(LH)	A1&!A3&!A4	0.0100	n/a	n/a	0.0336
A2(LH)	A1&!A3&A4	0.0100	n/a	n/a	0.0337
A2(LH)	A1&A3&!A4	0.0100	n/a	n/a	0.1935
A1(LH)	!A2&!A3&!A4	0.0100	n/a	n/a	-0.0663
A1(LH)	!A2&!A3&A4	0.0100	n/a	n/a	-0.0664
A1(LH)	!A2&A3&!A4	0.0100	n/a	n/a	-0.0664
A1(LH)	!A2&A3&A4	0.0100	n/a	n/a	-0.0664
A1(LH)	A2&!A3&!A4	0.0100	n/a	n/a	0.2034
A1(LH)	A2&!A3&A4	0.0100	n/a	n/a	0.2035
A1(LH)	A2&A3&!A4	0.0100	n/a	n/a	0.3630
A3(HL)	!A1&!A2&!A4	0.0100	n/a	n/a	0.1357
A3(HL)	!A1&!A2&A4	0.0100	n/a	n/a	0.1138
A3(HL)	!A1&A2&!A4	0.0100	n/a	n/a	0.1630
A3(HL)	!A1&A2&A4	0.0100	n/a	n/a	0.1331
A3(HL)	A1&!A2&!A4	0.0100	n/a	n/a	0.1551

continues on next page

Table 66 – continued from previous page

A3(HL)	A1&!A2&A4	0.0100	n/a	n/a	0.1303
A3(HL)	A1&A2&!A4	0.0100	n/a	n/a	0.1146
A2(HL)	!A1&!A3&!A4	0.0100	n/a	n/a	0.1677
A2(HL)	!A1&!A3&A4	0.0100	n/a	n/a	0.1614
A2(HL)	!A1&A3&!A4	0.0100	n/a	n/a	0.1561
A2(HL)	!A1&A3&A4	0.0100	n/a	n/a	0.1368
A2(HL)	A1&!A3&!A4	0.0100	n/a	n/a	0.1254
A2(HL)	A1&!A3&A4	0.0100	n/a	n/a	0.1255
A2(HL)	A1&A3&!A4	0.0100	n/a	n/a	0.1255
A4(LH)	!A1&!A2&!A3	0.0100	n/a	n/a	-0.1087
A4(LH)	!A1&!A2&A3	0.0100	n/a	n/a	-0.1083
A4(LH)	!A1&A2&!A3	0.0100	n/a	n/a	-0.1087
A4(LH)	!A1&A2&A3	0.0100	n/a	n/a	-0.1082
A4(LH)	A1&!A2&!A3	0.0100	n/a	n/a	-0.1088
A4(LH)	A1&!A2&A3	0.0100	n/a	n/a	-0.1084
A4(LH)	A1&A2&!A3	0.0100	n/a	n/a	-0.1088
A1(HL)	!A2&!A3&!A4	0.0100	n/a	n/a	0.1281
A1(HL)	!A2&!A3&A4	0.0100	n/a	n/a	0.1279
A1(HL)	!A2&A3&!A4	0.0100	n/a	n/a	0.1279
A1(HL)	!A2&A3&A4	0.0100	n/a	n/a	0.1277
A1(HL)	A2&!A3&!A4	0.0100	n/a	n/a	0.1264
A1(HL)	A2&!A3&A4	0.0100	n/a	n/a	0.1264
A1(HL)	A2&A3&!A4	0.0100	n/a	n/a	0.1264
A4(HL)	!A1&!A2&!A3	0.0100	n/a	n/a	0.1089
A4(HL)	!A1&!A2&A3	0.0100	n/a	n/a	0.1092
A4(HL)	!A1&A2&!A3	0.0100	n/a	n/a	0.1089
A4(HL)	!A1&A2&A3	0.0100	n/a	n/a	0.1099
A4(HL)	A1&!A2&!A3	0.0100	n/a	n/a	0.1088
A4(HL)	A1&!A2&A3	0.0100	n/a	n/a	0.1115
A4(HL)	A1&A2&!A3	0.0100	n/a	n/a	0.1108

LEAKAGE POWER

When Condition	Power (nW)
!A1&!A2&!A3&!A4	0.1509
!A1&!A2&!A3&A4	0.1509
!A1&!A2&A3&!A4	0.1509
!A1&!A2&A3&A4	0.1509
!A1&A2&!A3&!A4	0.1511
!A1&A2&!A3&A4	0.1511
!A1&A2&A3&!A4	0.1512
!A1&A2&A3&A4	0.1518
A1&!A2&!A3&!A4	0.3108
A1&!A2&!A3&A4	0.3108
A1&!A2&A3&!A4	0.3110
A1&!A2&A3&A4	0.3114
A1&A2&!A3&!A4	0.4679
A1&A2&!A3&A4	0.4685
A1&A2&A3&!A4	0.6236
A1&A2&A3&A4	0.4703

gf180mcu_fd_sc_mcu7t5v0__nor2_1

gf180mcu_fd_sc_mcu7t5v0__nor2_1 symbol

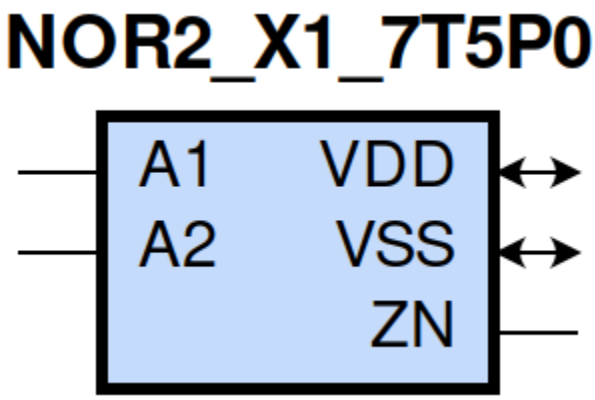

gf180mcu_fd_sc_mcu7t5v0__nor2_1 schematic

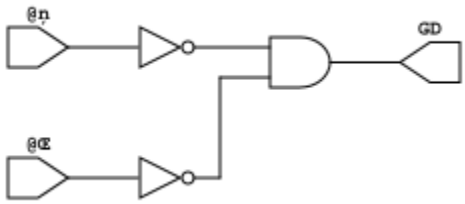

gf180mcu_fd_sc_mcu7t5v0__nor2_1 layout

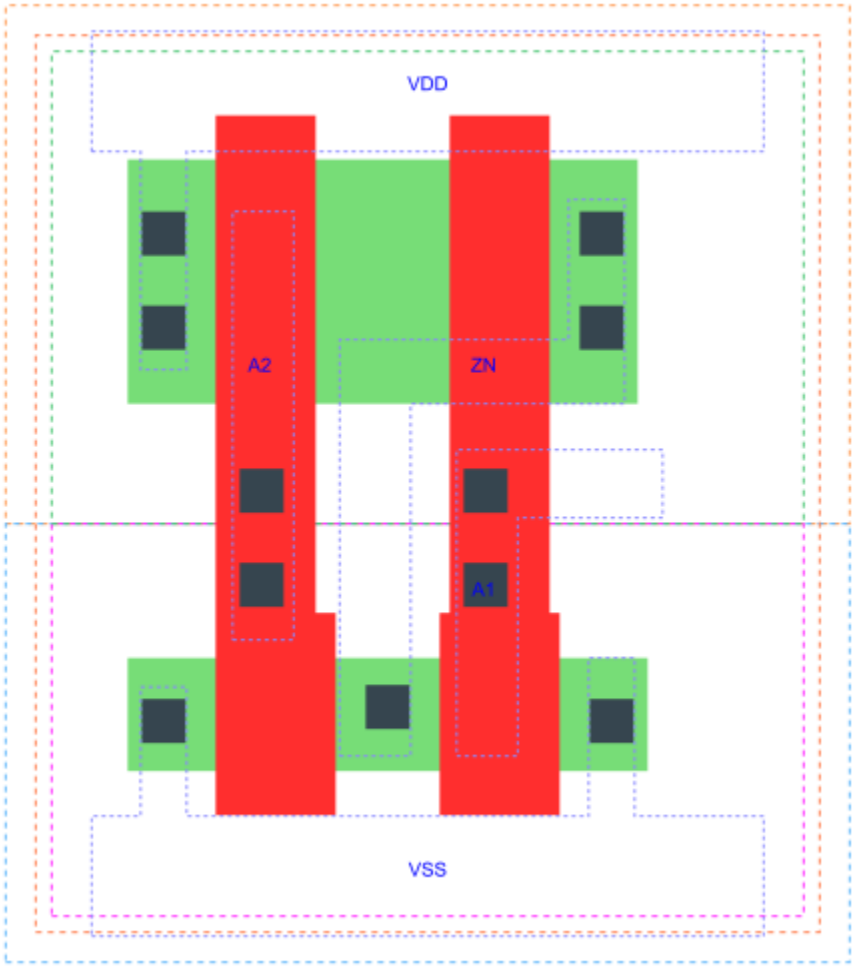

NOR2_X1 is a 2-input NOR, NOR(A1,A2), 1X drive strength

Attributes

Attribute	Value
area	13.171200 μm^2

OUTPUT FUNCTIONS

Output Pin	Function
ZN	((!A1)&(!A2))

TRUTH TABLE FOR ZN

A1	A2	ZN
0	0	1
1	?	0
?	1	0

FUNCTIONAL SCHEMATIC

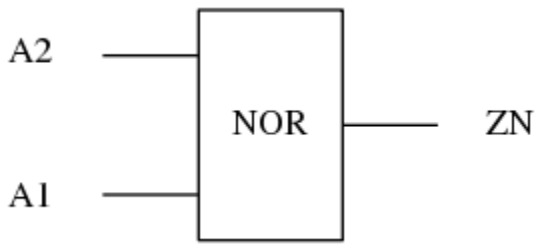

PIN CAPACITANCE (pf)

Pin	Type	Capacitance (pf)
A2	input	0.0042
A1	input	0.0045

DELAY AND OUTPUT TRANSITION TIME corresponding to min slew and load

Input Pin	Output	When Condition	Tin (ns)	Out Load (pf)	Delay (ns)	Tout (ns)
A2(HL)	ZN(LH)	!A1	0.0100	0.0010	0.1157	0.0728
A2(LH)	ZN(HL)	!A1	0.0100	0.0010	0.0734	0.0440
A1(HL)	ZN(LH)	!A2	0.0100	0.0010	0.0889	0.0720
A1(LH)	ZN(HL)	!A2	0.0100	0.0010	0.0542	0.0289

DYNAMIC ENERGY

Input Pin	When Condition	Tin (ns)	Output	Out Load (pf)	Energy (uW/MHz)
A1	!A2	0.0100	ZN(LH)	0.0010	0.1021
A2	!A1	0.0100	ZN(LH)	0.0010	0.1331
A1	!A2	0.0100	ZN(HL)	0.0010	0.0005
A2	!A1	0.0100	ZN(HL)	0.0010	0.0256
A2(LH)	A1	0.0100	n/a	n/a	-0.0327
A1(LH)	A2	0.0100	n/a	n/a	-0.0112
A2(HL)	A1	0.0100	n/a	n/a	0.0393
A1(HL)	A2	0.0100	n/a	n/a	0.0288

LEAKAGE POWER

When Condition	Power (nW)
!A1&!A2	0.1010
!A1&A2	0.1121
A1&!A2	0.0765
A1&A2	0.0765

gf180mcu_fd_sc_mcu7t5v0__nor2_2

gf180mcu_fd_sc_mcu7t5v0__nor2_2 symbol

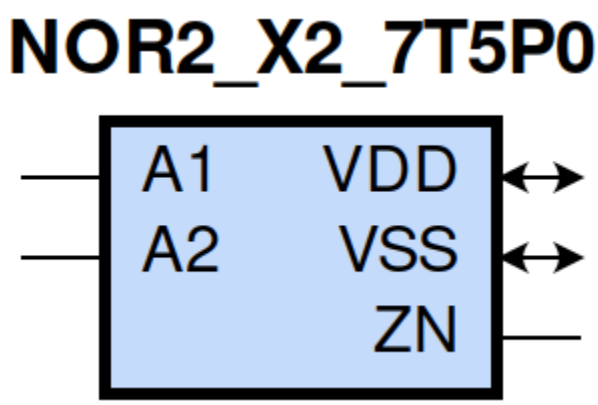

gf180mcu_fd_sc_mcu7t5v0__nor2_2 schematic

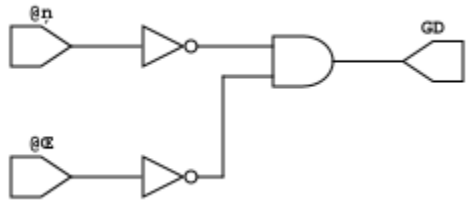

gf180mcu_fd_sc_mcu7t5v0__nor2_2 layout

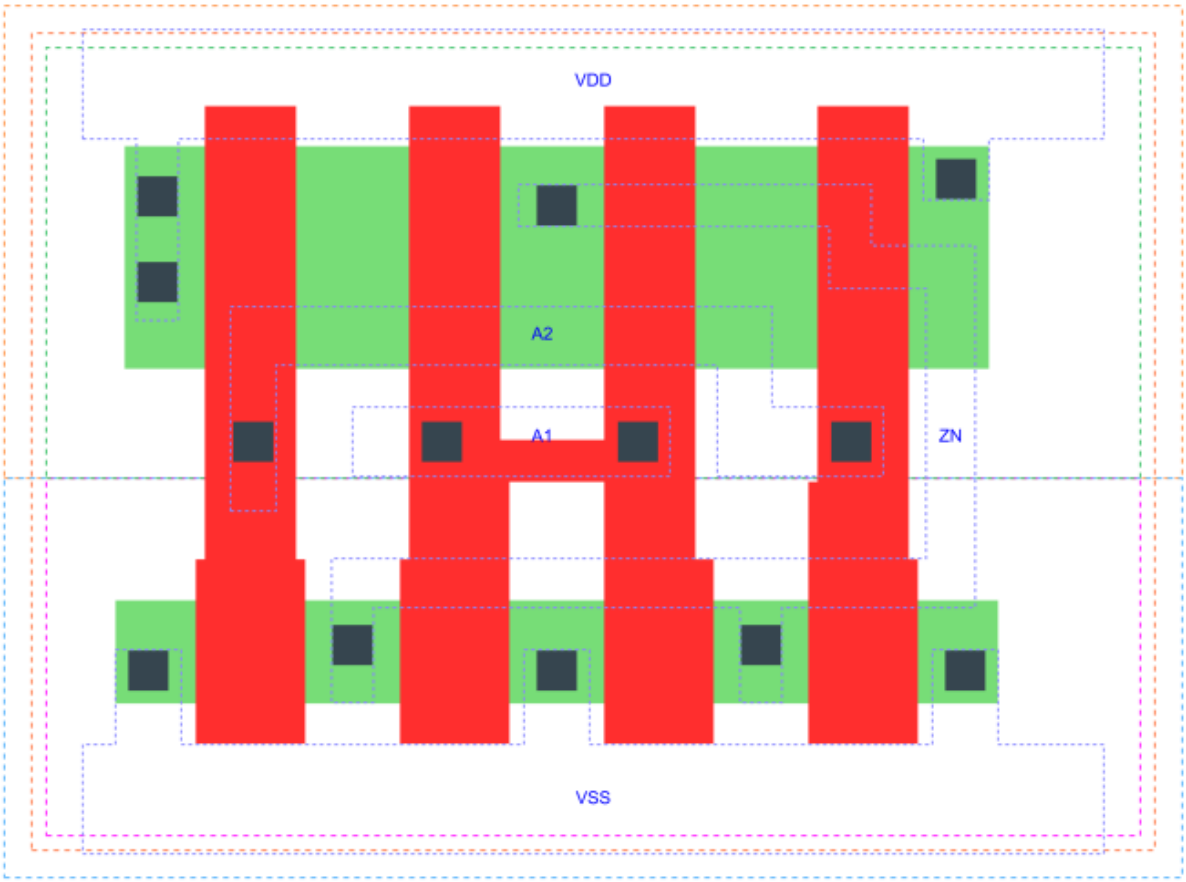

NOR2_X2 is a 2-input NOR, NOR(A1,A2), 2X drive strength

Attributes

Attribute	Value
area	21.952000 μm^2

OUTPUT FUNCTIONS

Output Pin	Function
ZN	((!A1)&(!A2))

TRUTH TABLE FOR ZN

A1	A2	ZN
0	0	1
1	?	0
?	1	0

FUNCTIONAL SCHEMATIC

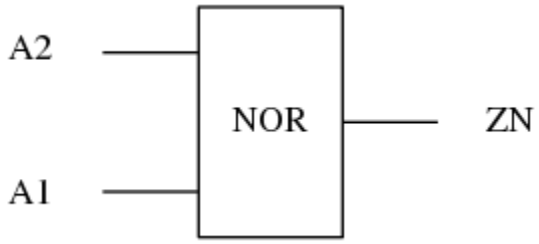

PIN CAPACITANCE (pf)

Pin	Type	Capacitance (pf)
A2	input	0.0086
A1	input	0.0083

DELAY AND OUTPUT TRANSITION TIME corresponding to min slew and load

Input Pin	Output	When Condition	Tin (ns)	Out Load (pf)	Delay (ns)	Tout (ns)
A2(HL)	ZN(LH)	!A1	0.0100	0.0010	0.0990	0.0588
A2(LH)	ZN(HL)	!A1	0.0100	0.0010	0.0642	0.0366
A1(HL)	ZN(LH)	!A2	0.0100	0.0010	0.0728	0.0575
A1(LH)	ZN(HL)	!A2	0.0100	0.0010	0.0457	0.0222

DYNAMIC ENERGY

Input Pin	When Condition	Tin (ns)	Output	Out Load (pf)	Energy (uW/MHz)
A1	!A2	0.0100	ZN(LH)	0.0010	0.1974
A2	!A1	0.0100	ZN(LH)	0.0010	0.2582
A1	!A2	0.0100	ZN(HL)	0.0010	-0.0163
A2	!A1	0.0100	ZN(HL)	0.0010	0.0339
A2(LH)	A1	0.0100	n/a	n/a	-0.0654
A1(LH)	A2	0.0100	n/a	n/a	-0.0224
A2(HL)	A1	0.0100	n/a	n/a	0.0786
A1(HL)	A2	0.0100	n/a	n/a	0.0573

LEAKAGE POWER

When Condition	Power (nW)
!A1&!A2	0.1520
!A1&A2	0.1743
A1&!A2	0.1030
A1&A2	0.1030

gf180mcu_fd_sc_mcu7t5v0__nor2_4

gf180mcu_fd_sc_mcu7t5v0__nor2_4 symbol

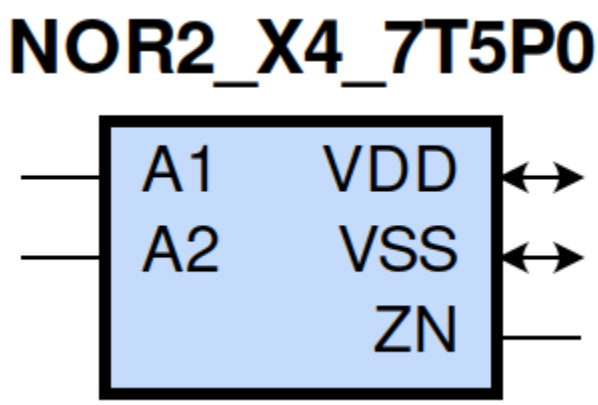

gf180mcu_fd_sc_mcu7t5v0__nor2_4 schematic

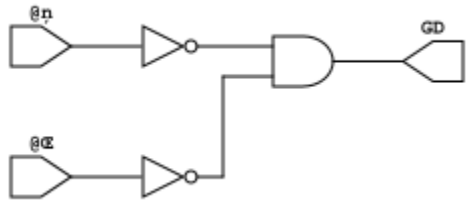

gf180mcu_fd_sc_mcu7t5v0__nor2_4 layout

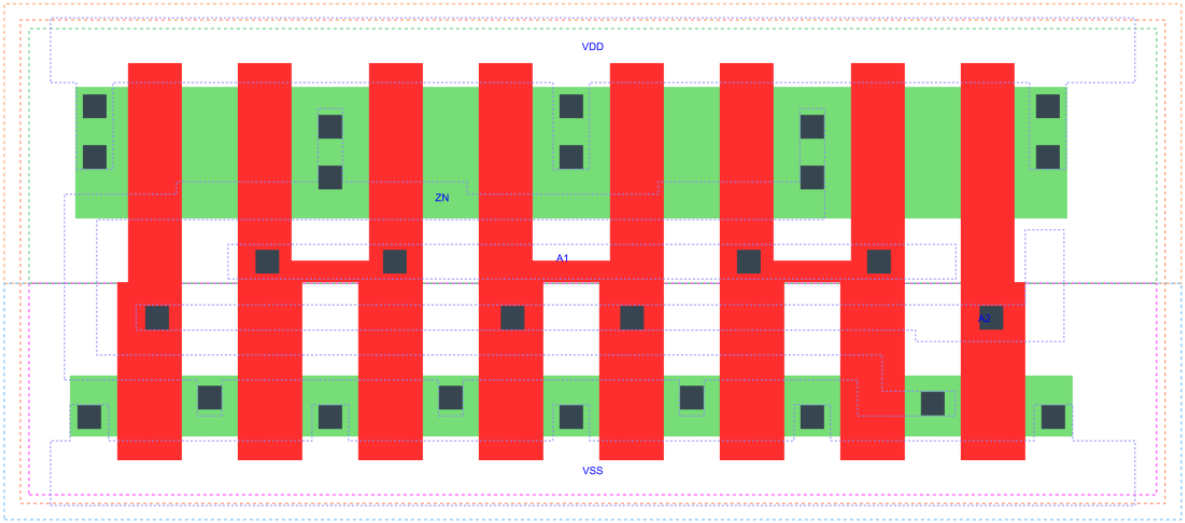

NOR2_X4 is a 2-input NOR, NOR(A1,A2), 4X drive strength

Attributes

Attribute	Value
area	39.513600 μm^2

OUTPUT FUNCTIONS

Output Pin	Function
ZN	((!A1)&(!A2))

TRUTH TABLE FOR ZN

A1	A2	ZN
0	0	1
1	?	0
?	1	0

FUNCTIONAL SCHEMATIC

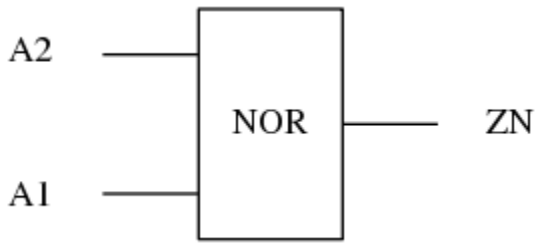

PIN CAPACITANCE (pf)

Pin	Type	Capacitance (pf)
A2	input	0.0176
A1	input	0.0177

DELAY AND OUTPUT TRANSITION TIME corresponding to min slew and load

Input Pin	Output	When Condition	Tin (ns)	Out Load (pf)	Delay (ns)	Tout (ns)
A2(HL)	ZN(LH)	!A1	0.0100	0.0010	0.0975	0.0585
A2(LH)	ZN(HL)	!A1	0.0100	0.0010	0.0636	0.0361
A1(HL)	ZN(LH)	!A2	0.0100	0.0010	0.0732	0.0574
A1(LH)	ZN(HL)	!A2	0.0100	0.0010	0.0459	0.0222

DYNAMIC ENERGY

Input Pin	When Condition	Tin (ns)	Output	Out Load (pf)	Energy (uW/MHz)
A1	!A2	0.0100	ZN(LH)	0.0010	0.4119
A2	!A1	0.0100	ZN(LH)	0.0010	0.5327
A1	!A2	0.0100	ZN(HL)	0.0010	-0.0245
A2	!A1	0.0100	ZN(HL)	0.0010	0.0658
A2(LH)	A1	0.0100	n/a	n/a	-0.1313
A1(LH)	A2	0.0100	n/a	n/a	-0.0444
A2(HL)	A1	0.0100	n/a	n/a	0.1571
A1(HL)	A2	0.0100	n/a	n/a	0.1055

LEAKAGE POWER

When Condition	Power (nW)
!A1&!A2	0.2540
!A1&A2	0.2985
A1&!A2	0.1560
A1&A2	0.1560

gf180mcu_fd_sc_mcu7t5v0__nor3_1

gf180mcu_fd_sc_mcu7t5v0__nor3_1 symbol

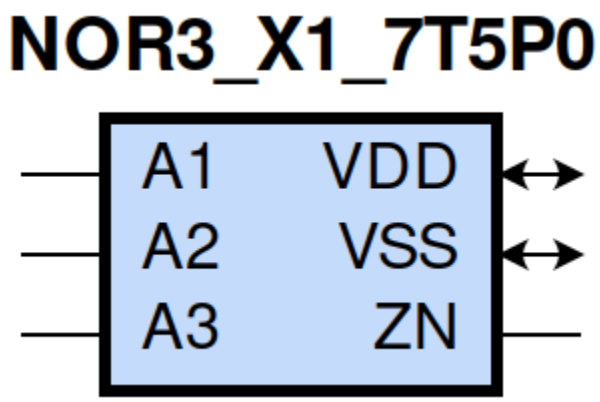

gf180mcu_fd_sc_mcu7t5v0__nor3_1 schematic

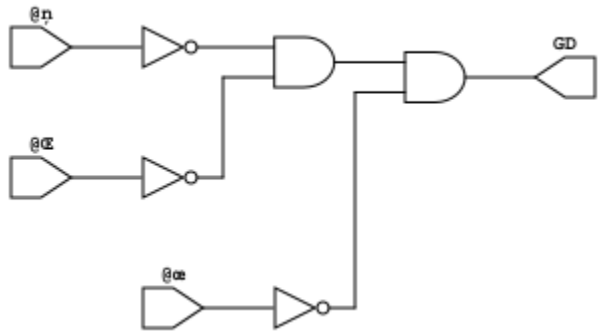

gf180mcu_fd_sc_mcu7t5v0__nor3_1 layout

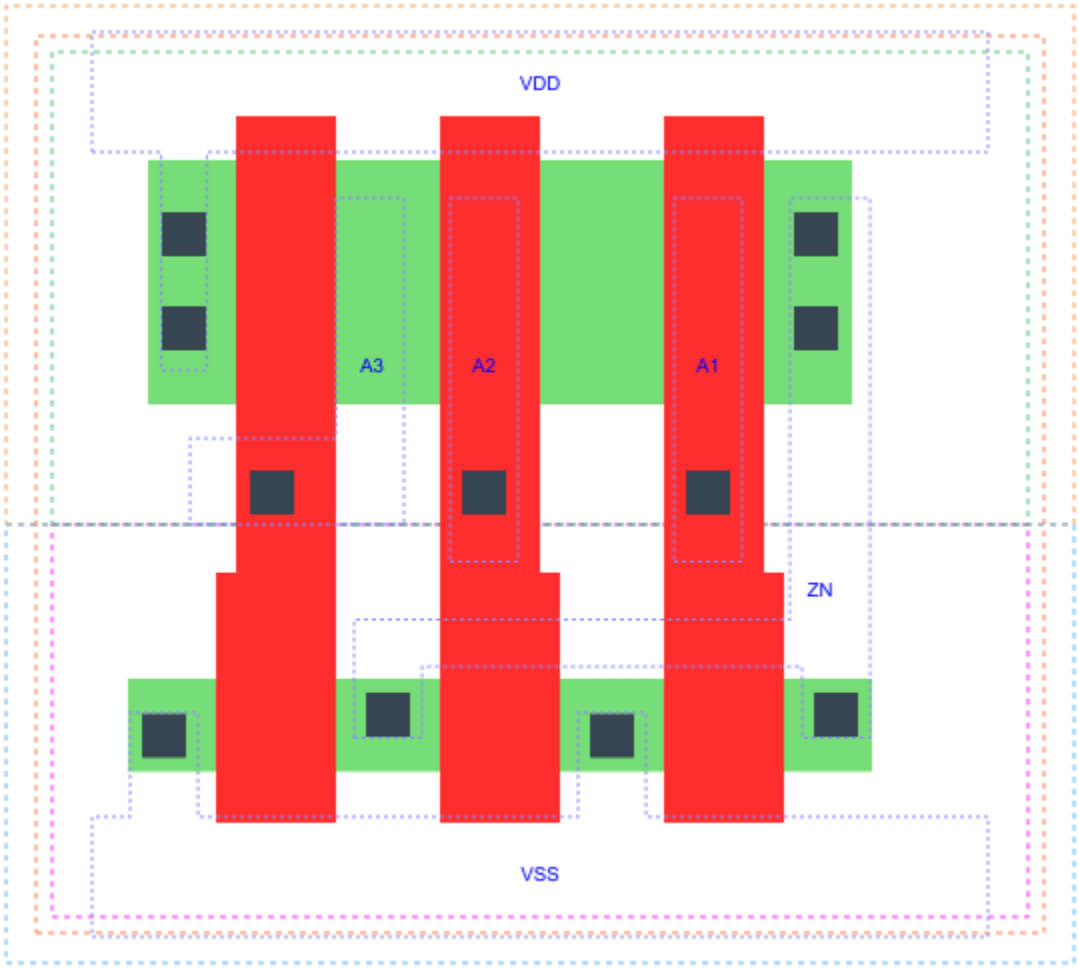

NOR3_X1 is a 3-input NOR, NOR(A1,A2,A3), 1X drive strength

Attributes

Attribute	Value
area	17.561600 μm^2

OUTPUT FUNCTIONS

Output Pin	Function
ZN	((!A1)&(!A2)&(!A3))

TRUTH TABLE FOR ZN

A1	A2	A3	ZN
0	0	0	1
1	?	?	0
?	1	?	0
?	?	1	0

FUNCTIONAL SCHEMATIC

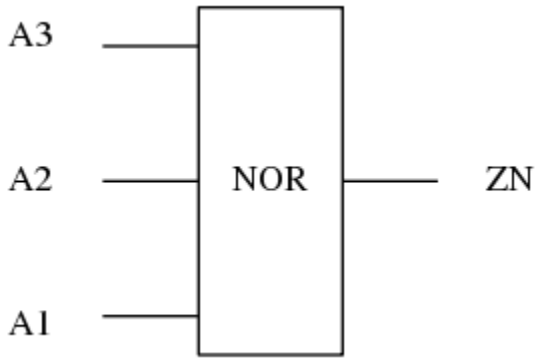

PIN CAPACITANCE (pf)

Pin	Type	Capacitance (pf)
A3	input	0.0041
A2	input	0.0040
A1	input	0.0042

DELAY AND OUTPUT TRANSITION TIME corresponding to min slew and load

Input Pin	Output	When Condition	Tin (ns)	Out Load (pf)	Delay (ns)	Tout (ns)
A3(LH)	ZN(HL)	!A1&!A2	0.0100	0.0010	0.1023	0.0707
A3(HL)	ZN(LH)	!A1&!A2	0.0100	0.0010	0.2082	0.1288
A2(HL)	ZN(LH)	!A1&!A3	0.0100	0.0010	0.1850	0.1286
A2(LH)	ZN(HL)	!A1&!A3	0.0100	0.0010	0.0939	0.0566
A1(HL)	ZN(LH)	!A2&!A3	0.0100	0.0010	0.1264	0.1249
A1(LH)	ZN(HL)	!A2&!A3	0.0100	0.0010	0.0683	0.0387

DYNAMIC ENERGY

Input Pin	When Condition	Tin (ns)	Output	Out Load (pf)	Energy (uW/MHz)
A1	!A2&!A3	0.0100	ZN(LH)	0.0010	0.1168
A2	!A1&!A3	0.0100	ZN(LH)	0.0010	0.1468
A3	!A1&!A2	0.0100	ZN(HL)	0.0010	0.0485
A1	!A2&!A3	0.0100	ZN(HL)	0.0010	0.0010
A2	!A1&!A3	0.0100	ZN(HL)	0.0010	0.0269
A3	!A1&!A2	0.0100	ZN(LH)	0.0010	0.1760
A3(LH)	!A1&A2	0.0100	n/a	n/a	-0.0341
A3(LH)	A1&!A2	0.0100	n/a	n/a	-0.0326
A3(LH)	A1&A2	0.0100	n/a	n/a	-0.0372
A2(LH)	!A1&A3	0.0100	n/a	n/a	-0.0119
A2(LH)	A1&!A3	0.0100	n/a	n/a	-0.0327
A2(LH)	A1&A3	0.0100	n/a	n/a	-0.0290
A1(LH)	!A2&A3	0.0100	n/a	n/a	-0.0109
A1(LH)	A2&!A3	0.0100	n/a	n/a	-0.0112
A1(LH)	A2&A3	0.0100	n/a	n/a	-0.0112
A3(HL)	!A1&A2	0.0100	n/a	n/a	0.0392
A3(HL)	A1&!A2	0.0100	n/a	n/a	0.0393
A3(HL)	A1&A2	0.0100	n/a	n/a	0.0392
A2(HL)	!A1&A3	0.0100	n/a	n/a	0.0250
A2(HL)	A1&!A3	0.0100	n/a	n/a	0.0394
A2(HL)	A1&A3	0.0100	n/a	n/a	0.0235
A1(HL)	!A2&A3	0.0100	n/a	n/a	0.0526
A1(HL)	A2&!A3	0.0100	n/a	n/a	0.0282
A1(HL)	A2&A3	0.0100	n/a	n/a	0.0282

LEAKAGE POWER

When Condition	Power (nW)
!A1&!A2&!A3	0.1272
!A1&!A2&A3	0.1475
!A1&A2&!A3	0.1121
!A1&A2&A3	0.1121
A1&!A2&!A3	0.0765
A1&!A2&A3	0.0765
A1&A2&!A3	0.0765
A1&A2&A3	0.0765

gf180mcu_fd_sc_mcu7t5v0__nor3_2

gf180mcu_fd_sc_mcu7t5v0__nor3_2 symbol

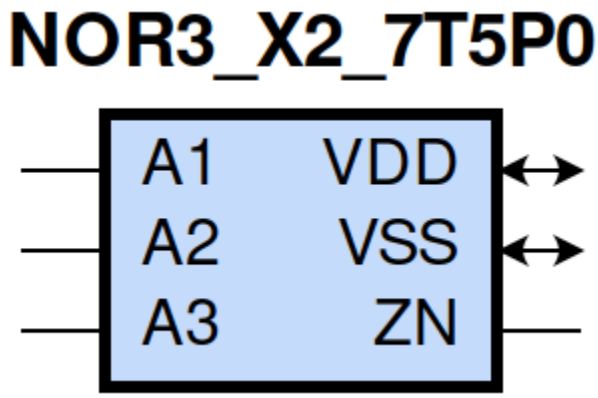

gf180mcu_fd_sc_mcu7t5v0__nor3_2 schematic

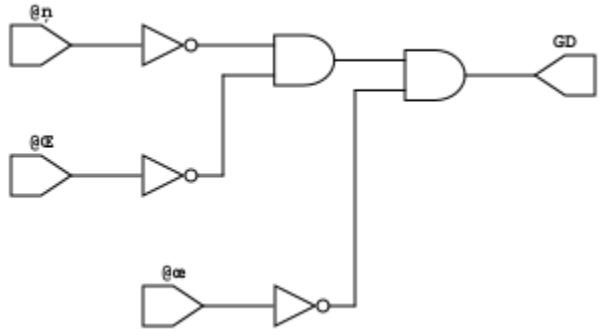

gf180mcu_fd_sc_mcu7t5v0__nor3_2 layout

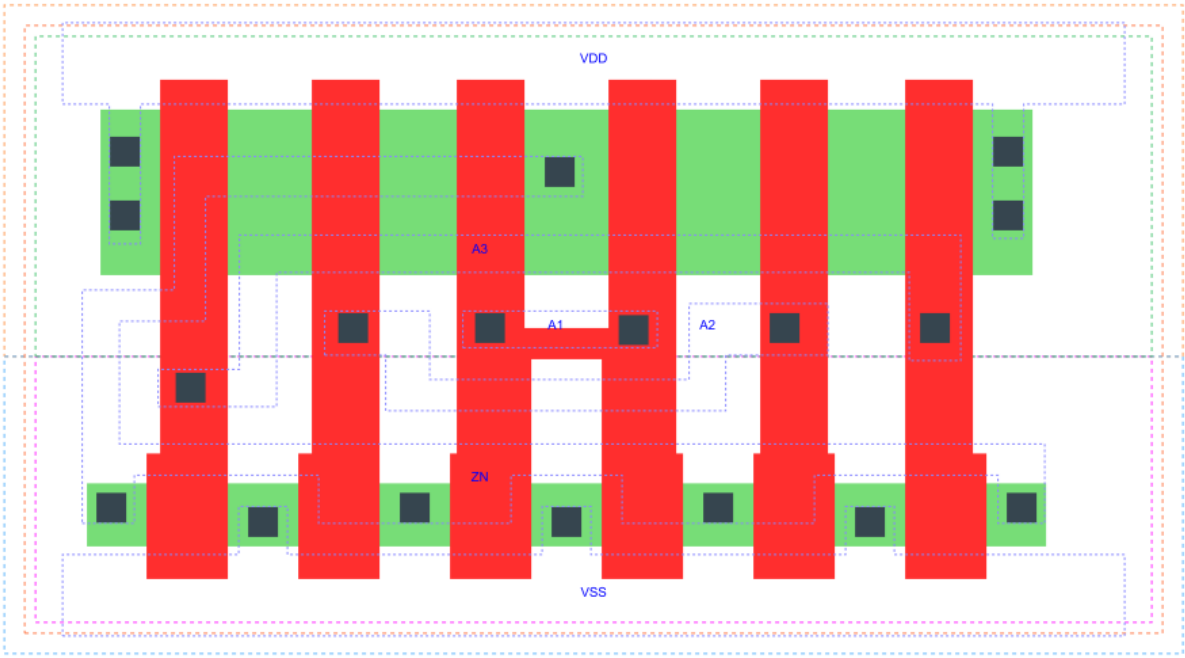

NOR3_X2 is a 3-input NOR, NOR(A1,A2,A3), 2X drive strength

Attributes

Attribute	Value
area	30.732800 μm^2

OUTPUT FUNCTIONS

Output Pin	Function
ZN	((!A1)&(!A2)&(!A3))

TRUTH TABLE FOR ZN

A1	A2	A3	ZN
0	0	0	1
1	?	?	0
?	1	?	0
?	?	1	0

FUNCTIONAL SCHEMATIC

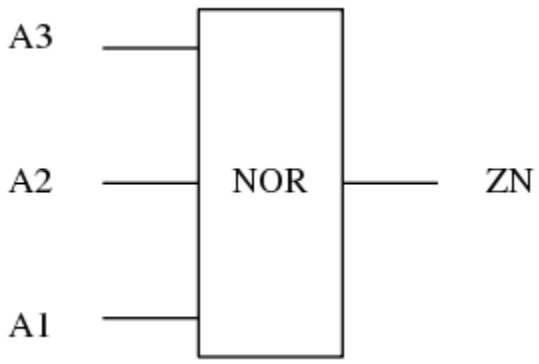

PIN CAPACITANCE (pf)

Pin	Type	Capacitance (pf)
A3	input	0.0088
A2	input	0.0084
A1	input	0.0080

DELAY AND OUTPUT TRANSITION TIME corresponding to min slew and load

Input Pin	Output	When Condition	Tin (ns)	Out Load (pf)	Delay (ns)	Tout (ns)
A3(LH)	ZN(HL)	!A1&!A2	0.0100	0.0010	0.0975	0.0675
A3(HL)	ZN(LH)	!A1&!A2	0.0100	0.0010	0.1998	0.1206
A2(HL)	ZN(LH)	!A1&!A3	0.0100	0.0010	0.1754	0.1203
A2(LH)	ZN(HL)	!A1&!A3	0.0100	0.0010	0.0894	0.0533
A1(HL)	ZN(LH)	!A2&!A3	0.0100	0.0010	0.1175	0.1160
A1(LH)	ZN(HL)	!A2&!A3	0.0100	0.0010	0.0642	0.0357

DYNAMIC ENERGY

Input Pin	When Condition	Tin (ns)	Output	Out Load (pf)	Energy (uW/MHz)
A1	!A2&!A3	0.0100	ZN(LH)	0.0010	0.2539
A2	!A1&!A3	0.0100	ZN(LH)	0.0010	0.3141
A3	!A1&!A2	0.0100	ZN(HL)	0.0010	0.0844
A1	!A2&!A3	0.0100	ZN(HL)	0.0010	-0.0131
A2	!A1&!A3	0.0100	ZN(HL)	0.0010	0.0380
A3	!A1&!A2	0.0100	ZN(LH)	0.0010	0.3721
A3(LH)	!A1&A2	0.0100	n/a	n/a	-0.0681
A3(LH)	A1&!A2	0.0100	n/a	n/a	-0.0655
A3(LH)	A1&A2	0.0100	n/a	n/a	-0.0743
A2(LH)	!A1&A3	0.0100	n/a	n/a	-0.0239
A2(LH)	A1&!A3	0.0100	n/a	n/a	-0.0654
A2(LH)	A1&A3	0.0100	n/a	n/a	-0.0578
A1(LH)	!A2&A3	0.0100	n/a	n/a	-0.0219
A1(LH)	A2&!A3	0.0100	n/a	n/a	-0.0224
A1(LH)	A2&A3	0.0100	n/a	n/a	-0.0224
A3(HL)	!A1&A2	0.0100	n/a	n/a	0.0787
A3(HL)	A1&!A2	0.0100	n/a	n/a	0.0787
A3(HL)	A1&A2	0.0100	n/a	n/a	0.0787
A2(HL)	!A1&A3	0.0100	n/a	n/a	0.0527
A2(HL)	A1&!A3	0.0100	n/a	n/a	0.0788
A2(HL)	A1&A3	0.0100	n/a	n/a	0.0473
A1(HL)	!A2&A3	0.0100	n/a	n/a	0.1069
A1(HL)	A2&!A3	0.0100	n/a	n/a	0.0555
A1(HL)	A2&A3	0.0100	n/a	n/a	0.0555

LEAKAGE POWER

When Condition	Power (nW)
!A1&!A2&!A3	0.2044
!A1&!A2&A3	0.2449
!A1&A2&!A3	0.1743
!A1&A2&A3	0.1743
A1&!A2&!A3	0.1030
A1&!A2&A3	0.1030
A1&A2&!A3	0.1030
A1&A2&A3	0.1030

gf180mcu_fd_sc_mcu7t5v0__nor3_4

gf180mcu_fd_sc_mcu7t5v0__nor3_4 symbol

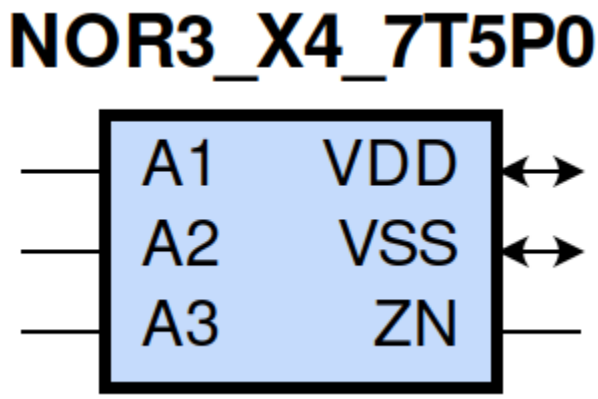

gf180mcu_fd_sc_mcu7t5v0__nor3_4 schematic

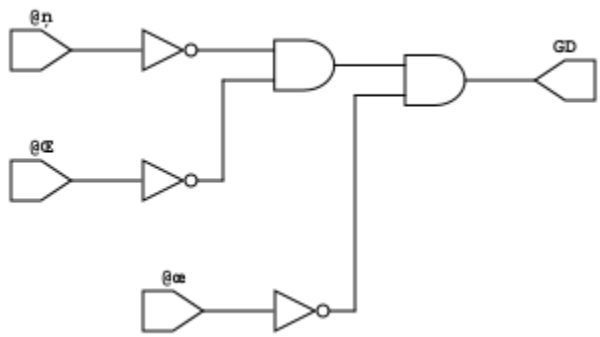

gf180mcu_fd_sc_mcu7t5v0__nor3_4 layout

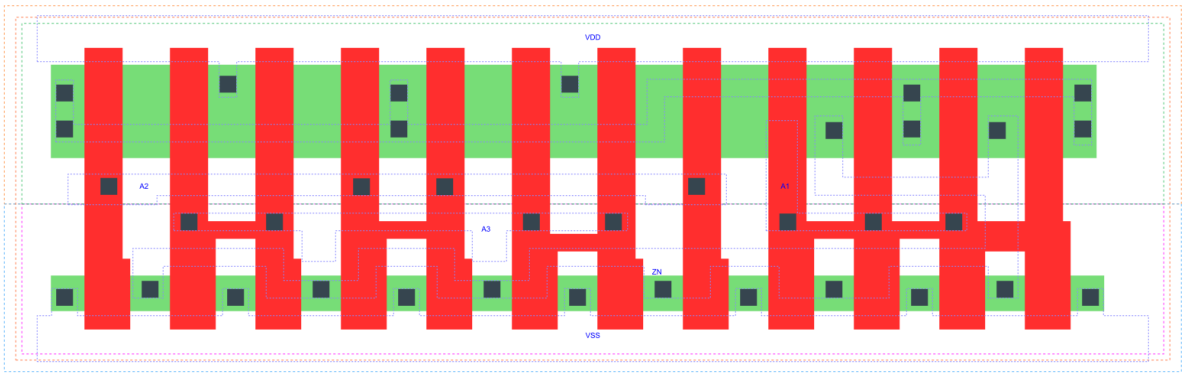

NOR3_X4 is a 3-input NOR, NOR(A1,A2,A3), 4X drive strength

Attributes

Attribute	Value
area	57.075200 μm^2

OUTPUT FUNCTIONS

Output Pin	Function
ZN	((!A1)&(!A2)&(!A3))

TRUTH TABLE FOR ZN

A1	A2	A3	ZN
0	0	0	1
1	?	?	0
?	1	?	0
?	?	1	0

FUNCTIONAL SCHEMATIC

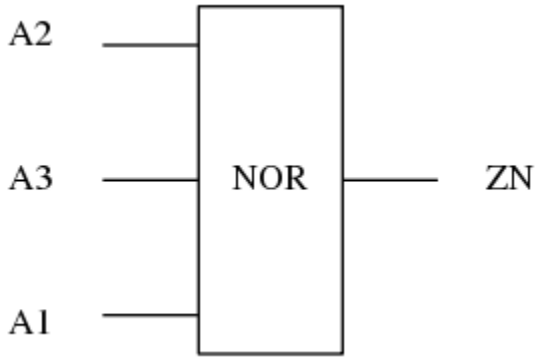

PIN CAPACITANCE (pf)

Pin	Type	Capacitance (pf)
A2	input	0.0165
A3	input	0.0160
A1	input	0.0160

DELAY AND OUTPUT TRANSITION TIME corresponding to min slew and load

Input Pin	Output	When Condition	Tin (ns)	Out Load (pf)	Delay (ns)	Tout (ns)
A2(HL)	ZN(LH)	!A1&!A3	0.0100	0.0010	0.1661	0.1061
A2(LH)	ZN(HL)	!A1&!A3	0.0100	0.0010	0.0840	0.0501
A3(LH)	ZN(HL)	!A1&!A2	0.0100	0.0010	0.0891	0.0628
A3(HL)	ZN(LH)	!A1&!A2	0.0100	0.0010	0.1910	0.1065
A1(HL)	ZN(LH)	!A2&!A3	0.0100	0.0010	0.0877	0.0930
A1(LH)	ZN(HL)	!A2&!A3	0.0100	0.0010	0.0548	0.0283

DYNAMIC ENERGY

Input Pin	When Condition	Tin (ns)	Output	Out Load (pf)	Energy (uW/MHz)
A1	!A2&!A3	0.0100	ZN(LH)	0.0010	0.4410
A2	!A1&!A3	0.0100	ZN(LH)	0.0010	0.6252
A3	!A1&!A2	0.0100	ZN(HL)	0.0010	0.1827
A1	!A2&!A3	0.0100	ZN(HL)	0.0010	-0.0298
A2	!A1&!A3	0.0100	ZN(HL)	0.0010	0.0893
A3	!A1&!A2	0.0100	ZN(LH)	0.0010	0.7432
A3(LH)	!A1&A2	0.0100	n/a	n/a	-0.1368
A3(LH)	A1&!A2	0.0100	n/a	n/a	-0.1285
A3(LH)	A1&A2	0.0100	n/a	n/a	-0.1458
A2(LH)	!A1&A3	0.0100	n/a	n/a	-0.0486
A2(LH)	A1&!A3	0.0100	n/a	n/a	-0.1213
A2(LH)	A1&A3	0.0100	n/a	n/a	-0.1038
A1(LH)	!A2&A3	0.0100	n/a	n/a	-0.0414
A1(LH)	A2&!A3	0.0100	n/a	n/a	-0.0405
A1(LH)	A2&A3	0.0100	n/a	n/a	-0.0406
A3(HL)	!A1&A2	0.0100	n/a	n/a	0.1571
A3(HL)	A1&!A2	0.0100	n/a	n/a	0.1576
A3(HL)	A1&A2	0.0100	n/a	n/a	0.1571
A2(HL)	!A1&A3	0.0100	n/a	n/a	0.1061
A2(HL)	A1&!A3	0.0100	n/a	n/a	0.1576
A2(HL)	A1&A3	0.0100	n/a	n/a	0.0856
A1(HL)	!A2&A3	0.0100	n/a	n/a	0.2271
A1(HL)	A2&!A3	0.0100	n/a	n/a	0.1227
A1(HL)	A2&A3	0.0100	n/a	n/a	0.1227

LEAKAGE POWER

When Condition	Power (nW)
!A1&!A2&!A3	0.3589
!A1&!A2&A3	0.4398
!A1&A2&!A3	0.2985
!A1&A2&A3	0.2985
A1&!A2&!A3	0.1560
A1&!A2&A3	0.1561
A1&A2&!A3	0.1561
A1&A2&A3	0.1561

gf180mcu_fd_sc_mcu7t5v0__nor4_1

gf180mcu_fd_sc_mcu7t5v0__nor4_1 symbol

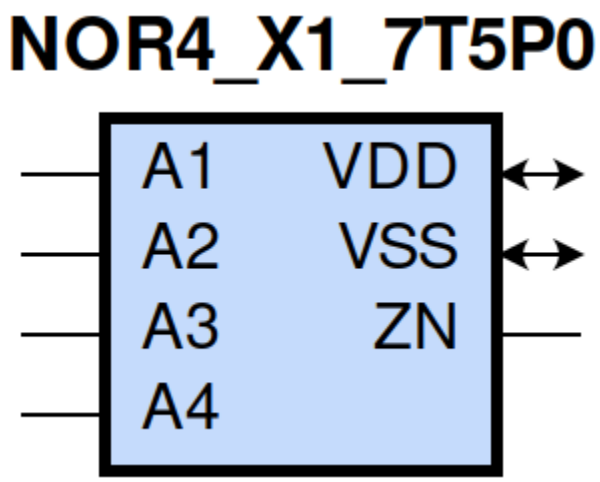

gf180mcu_fd_sc_mcu7t5v0__nor4_1 schematic

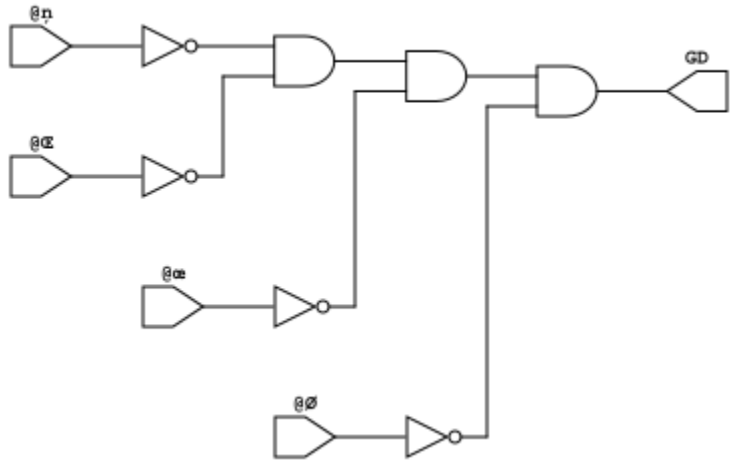

gf180mcu_fd_sc_mcu7t5v0__nor4_1 layout

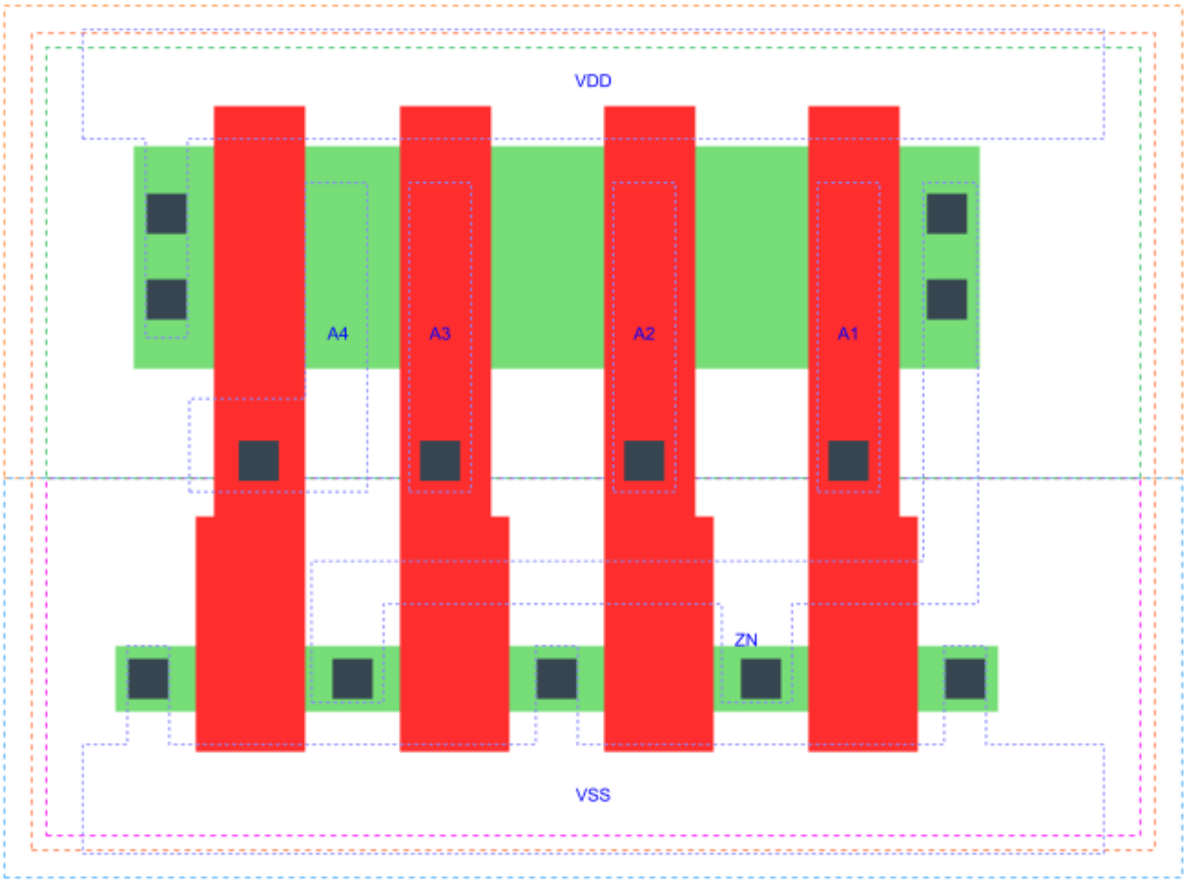

NOR4_X1 is a 4-input NOR, NOR(A1,A2,A3,A4), 1X drive strength

Attributes

Attribute	Value
area	21.952000 μm^2

OUTPUT FUNCTIONS

Output Pin	Function
ZN	((!A1)&(!A2)&(!A3)&(!A4))

TRUTH TABLE FOR ZN

A1	A2	A3	A4	ZN
0	0	0	0	1
1	?	?	?	0
?	1	?	?	0
?	?	1	?	0
?	?	?	1	0

FUNCTIONAL SCHEMATIC

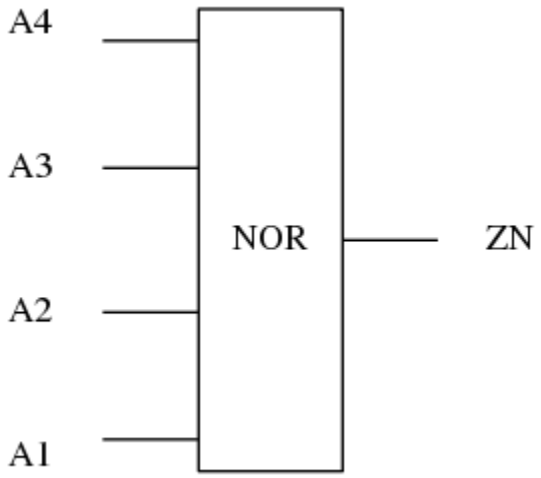

PIN CAPACITANCE (pf)

Pin	Type	Capacitance (pf)
A4	input	0.0039
A3	input	0.0037
A2	input	0.0037
A1	input	0.0040

DELAY AND OUTPUT TRANSITION TIME corresponding to min slew and load

Input Pin	Output	When Condition	Tin (ns)	Out Load (pf)	Delay (ns)	Tout (ns)
A4(LH)	ZN(HL)	!A1&!A2&!A3	0.0100	0.0010	0.1369	0.1054
A4(HL)	ZN(LH)	!A1&!A2&!A3	0.0100	0.0010	0.3142	0.1906
A3(LH)	ZN(HL)	!A1&!A2&!A4	0.0100	0.0010	0.1343	0.0915
A3(HL)	ZN(LH)	!A1&!A2&!A4	0.0100	0.0010	0.2911	0.1903
A2(HL)	ZN(LH)	!A1&!A3&!A4	0.0100	0.0010	0.2343	0.1889
A2(LH)	ZN(HL)	!A1&!A3&!A4	0.0100	0.0010	0.1175	0.0720
A1(HL)	ZN(LH)	!A2&!A3&!A4	0.0100	0.0010	0.1451	0.1745
A1(LH)	ZN(HL)	!A2&!A3&!A4	0.0100	0.0010	0.0844	0.0497

DYNAMIC ENERGY

Input Pin	When Condition	Tin (ns)	Output	Out Load (pf)	Energy (uW/MHz)
A1	!A2&!A3&!A4	0.0100	ZN(LH)	0.0010	0.1217
A4	!A1&!A2&!A3	0.0100	ZN(HL)	0.0010	0.0742
A2	!A1&!A3&!A4	0.0100	ZN(LH)	0.0010	0.1514
A3	!A1&!A2&!A4	0.0100	ZN(HL)	0.0010	0.0528
A1	!A2&!A3&!A4	0.0100	ZN(HL)	0.0010	0.0012
A2	!A1&!A3&!A4	0.0100	ZN(HL)	0.0010	0.0272
A4	!A1&!A2&!A3	0.0100	ZN(LH)	0.0010	0.2095
A3	!A1&!A2&!A4	0.0100	ZN(LH)	0.0010	0.1804
A3(LH)	!A1&!A2&A4	0.0100	n/a	n/a	-0.0128
A3(LH)	!A1&A2&!A4	0.0100	n/a	n/a	-0.0340
A3(LH)	!A1&A2&A4	0.0100	n/a	n/a	-0.0306
A3(LH)	A1&!A2&!A4	0.0100	n/a	n/a	-0.0313
A3(LH)	A1&!A2&A4	0.0100	n/a	n/a	-0.0266
A3(LH)	A1&A2&!A4	0.0100	n/a	n/a	-0.0373
A3(LH)	A1&A2&A4	0.0100	n/a	n/a	-0.0352
A2(LH)	!A1&!A3&A4	0.0100	n/a	n/a	-0.0115
A2(LH)	!A1&A3&!A4	0.0100	n/a	n/a	-0.0120
A2(LH)	!A1&A3&A4	0.0100	n/a	n/a	-0.0120
A2(LH)	A1&!A3&!A4	0.0100	n/a	n/a	-0.0327
A2(LH)	A1&!A3&A4	0.0100	n/a	n/a	-0.0247
A2(LH)	A1&A3&!A4	0.0100	n/a	n/a	-0.0290
A2(LH)	A1&A3&A4	0.0100	n/a	n/a	-0.0277
A1(LH)	!A2&!A3&A4	0.0100	n/a	n/a	-0.0110
A1(LH)	!A2&A3&!A4	0.0100	n/a	n/a	-0.0110
A1(LH)	!A2&A3&A4	0.0100	n/a	n/a	-0.0110
A1(LH)	A2&!A3&!A4	0.0100	n/a	n/a	-0.0112
A1(LH)	A2&!A3&A4	0.0100	n/a	n/a	-0.0112
A1(LH)	A2&A3&!A4	0.0100	n/a	n/a	-0.0112
A1(LH)	A2&A3&A4	0.0100	n/a	n/a	-0.0112
A3(HL)	!A1&!A2&A4	0.0100	n/a	n/a	0.0237
A3(HL)	!A1&A2&!A4	0.0100	n/a	n/a	0.0394
A3(HL)	!A1&A2&A4	0.0100	n/a	n/a	0.0235
A3(HL)	A1&!A2&!A4	0.0100	n/a	n/a	0.0394
A3(HL)	A1&!A2&A4	0.0100	n/a	n/a	0.0229

continues on next page

Table 67 – continued from previous page

A3(HL)	A1&A2&!A4	0.0100	n/a	n/a	0.0394
A3(HL)	A1&A2&A4	0.0100	n/a	n/a	0.0235
A2(HL)	!A1&!A3&A4	0.0100	n/a	n/a	0.0507
A2(HL)	!A1&A3&!A4	0.0100	n/a	n/a	0.0268
A2(HL)	!A1&A3&A4	0.0100	n/a	n/a	0.0268
A2(HL)	A1&!A3&!A4	0.0100	n/a	n/a	0.0393
A2(HL)	A1&!A3&A4	0.0100	n/a	n/a	0.0229
A2(HL)	A1&A3&!A4	0.0100	n/a	n/a	0.0239
A2(HL)	A1&A3&A4	0.0100	n/a	n/a	0.0239
A4(LH)	!A1&!A2&A3	0.0100	n/a	n/a	-0.0350
A4(LH)	!A1&A2&!A3	0.0100	n/a	n/a	-0.0336
A4(LH)	!A1&A2&A3	0.0100	n/a	n/a	-0.0372
A4(LH)	A1&!A2&!A3	0.0100	n/a	n/a	-0.0328
A4(LH)	A1&!A2&A3	0.0100	n/a	n/a	-0.0367
A4(LH)	A1&A2&!A3	0.0100	n/a	n/a	-0.0338
A4(LH)	A1&A2&A3	0.0100	n/a	n/a	-0.0372
A1(HL)	!A2&!A3&A4	0.0100	n/a	n/a	0.0783
A1(HL)	!A2&A3&!A4	0.0100	n/a	n/a	0.0544
A1(HL)	!A2&A3&A4	0.0100	n/a	n/a	0.0544
A1(HL)	A2&!A3&!A4	0.0100	n/a	n/a	0.0282
A1(HL)	A2&!A3&A4	0.0100	n/a	n/a	0.0282
A1(HL)	A2&A3&!A4	0.0100	n/a	n/a	0.0282
A1(HL)	A2&A3&A4	0.0100	n/a	n/a	0.0282
A4(HL)	!A1&!A2&A3	0.0100	n/a	n/a	0.0393
A4(HL)	!A1&A2&!A3	0.0100	n/a	n/a	0.0393
A4(HL)	!A1&A2&A3	0.0100	n/a	n/a	0.0393
A4(HL)	A1&!A2&!A3	0.0100	n/a	n/a	0.0393
A4(HL)	A1&!A2&A3	0.0100	n/a	n/a	0.0393
A4(HL)	A1&A2&!A3	0.0100	n/a	n/a	0.0392
A4(HL)	A1&A2&A3	0.0100	n/a	n/a	0.0393

LEAKAGE POWER

When Condition	Power (nW)
!A1&!A2&!A3&!A4	0.1603
!A1&!A2&!A3&A4	0.1825
!A1&!A2&A3&!A4	0.1475
!A1&!A2&A3&A4	0.1475
!A1&A2&!A3&!A4	0.1121
!A1&A2&!A3&A4	0.1121
!A1&A2&A3&!A4	0.1121
!A1&A2&A3&A4	0.1121
A1&!A2&!A3&!A4	0.0765
A1&!A2&!A3&A4	0.0765
A1&!A2&A3&!A4	0.0765
A1&!A2&A3&A4	0.0765
A1&A2&!A3&!A4	0.0765
A1&A2&!A3&A4	0.0765
A1&A2&A3&!A4	0.0765
A1&A2&A3&A4	0.0765

gf180mcu_fd_sc_mcu7t5v0__nor4_2

gf180mcu_fd_sc_mcu7t5v0__nor4_2 symbol

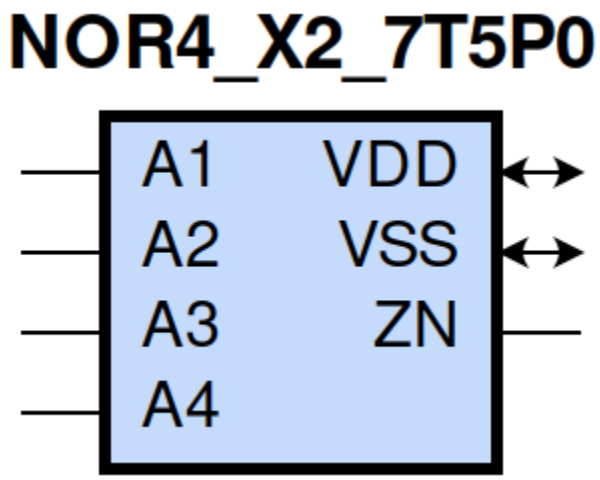

gf180mcu_fd_sc_mcu7t5v0__nor4_2 schematic

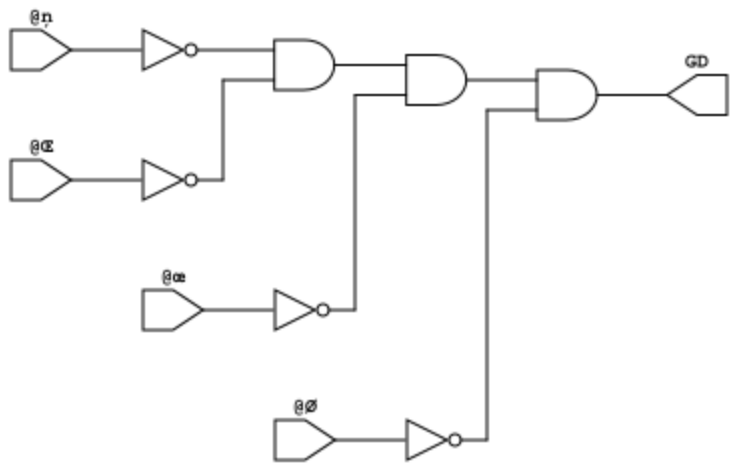

gf180mcu_fd_sc_mcu7t5v0__nor4_2 layout

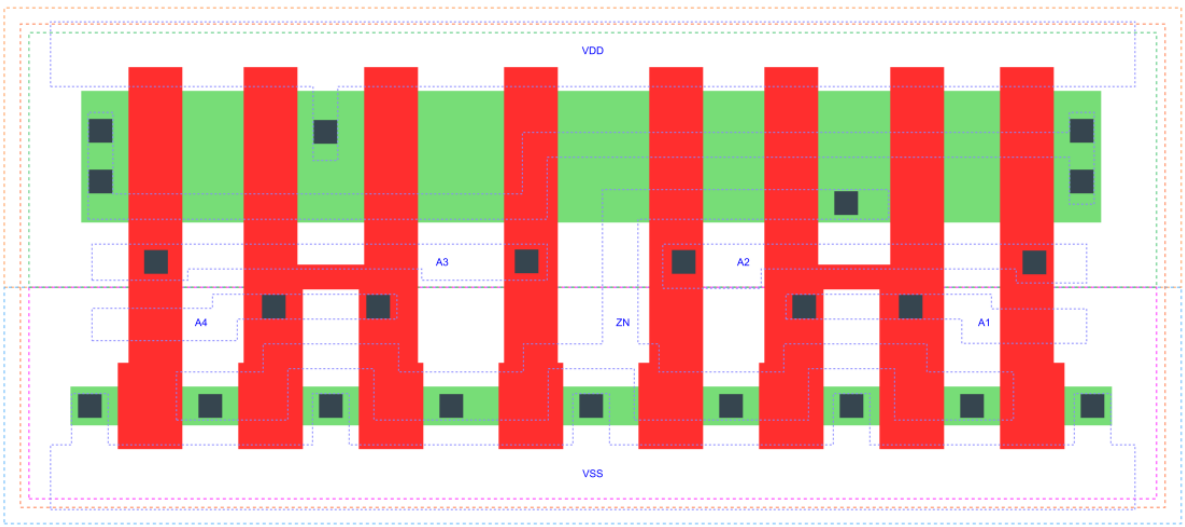

NOR4_X2 is a 4-input NOR, NOR(A1,A2,A3,A4), 2X drive strength

Attributes

Attribute	Value
area	39.513600 μm^2

OUTPUT FUNCTIONS

Output Pin	Function
ZN	((!A1)&(!A2)&(!A3)&(!A4))

TRUTH TABLE FOR ZN

A1	A2	A3	A4	ZN
0	0	0	0	1
1	?	?	?	0
?	1	?	?	0
?	?	1	?	0
?	?	?	1	0

FUNCTIONAL SCHEMATIC

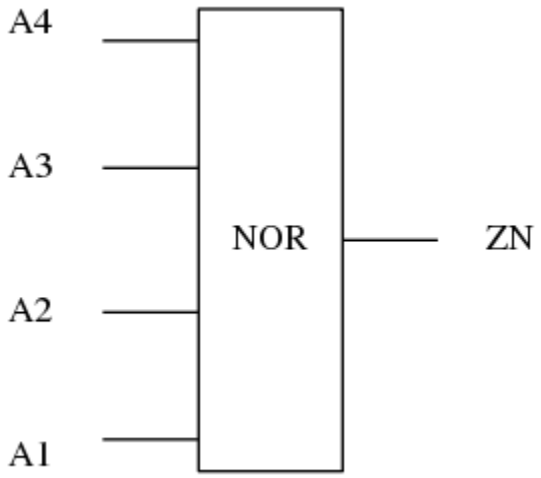

PIN CAPACITANCE (pf)

Pin	Type	Capacitance (pf)
A4	input	0.0074
A3	input	0.0079
A2	input	0.0079
A1	input	0.0079

DELAY AND OUTPUT TRANSITION TIME corresponding to min slew and load

Input Pin	Output	When Condition	Tin (ns)	Out Load (pf)	Delay (ns)	Tout (ns)
A4(LH)	ZN(HL)	!A1&!A2&!A3	0.0100	0.0010	0.1307	0.1039
A4(HL)	ZN(LH)	!A1&!A2&!A3	0.0100	0.0010	0.3263	0.1836
A3(LH)	ZN(HL)	!A1&!A2&!A4	0.0100	0.0010	0.1304	0.0925
A3(HL)	ZN(LH)	!A1&!A2&!A4	0.0100	0.0010	0.3007	0.1835
A2(HL)	ZN(LH)	!A1&!A3&!A4	0.0100	0.0010	0.2082	0.1762
A2(LH)	ZN(HL)	!A1&!A3&!A4	0.0100	0.0010	0.1102	0.0668
A1(HL)	ZN(LH)	!A2&!A3&!A4	0.0100	0.0010	0.1262	0.1527
A1(LH)	ZN(HL)	!A2&!A3&!A4	0.0100	0.0010	0.0785	0.0451

DYNAMIC ENERGY

Input Pin	When Condition	Tin (ns)	Output	Out Load (pf)	Energy (uW/MHz)
A1	!A2&!A3&!A4	0.0100	ZN(LH)	0.0010	0.2587
A4	!A1&!A2&!A3	0.0100	ZN(HL)	0.0010	0.1523
A2	!A1&!A3&!A4	0.0100	ZN(LH)	0.0010	0.3188
A3	!A1&!A2&!A4	0.0100	ZN(HL)	0.0010	0.1043
A1	!A2&!A3&!A4	0.0100	ZN(HL)	0.0010	-0.0116
A2	!A1&!A3&!A4	0.0100	ZN(HL)	0.0010	0.0370
A4	!A1&!A2&!A3	0.0100	ZN(LH)	0.0010	0.4794
A3	!A1&!A2&!A4	0.0100	ZN(LH)	0.0010	0.4206
A3(LH)	!A1&!A2&A4	0.0100	n/a	n/a	-0.0264
A3(LH)	!A1&A2&!A4	0.0100	n/a	n/a	-0.0631
A3(LH)	!A1&A2&A4	0.0100	n/a	n/a	-0.0545
A3(LH)	A1&!A2&!A4	0.0100	n/a	n/a	-0.0612
A3(LH)	A1&!A2&A4	0.0100	n/a	n/a	-0.0524
A3(LH)	A1&A2&!A4	0.0100	n/a	n/a	-0.0689
A3(LH)	A1&A2&A4	0.0100	n/a	n/a	-0.0633
A2(LH)	!A1&!A3&A4	0.0100	n/a	n/a	-0.0221
A2(LH)	!A1&A3&!A4	0.0100	n/a	n/a	-0.0222
A2(LH)	!A1&A3&A4	0.0100	n/a	n/a	-0.0222
A2(LH)	A1&!A3&!A4	0.0100	n/a	n/a	-0.0656
A2(LH)	A1&!A3&A4	0.0100	n/a	n/a	-0.0462
A2(LH)	A1&A3&!A4	0.0100	n/a	n/a	-0.0511
A2(LH)	A1&A3&A4	0.0100	n/a	n/a	-0.0486
A1(LH)	!A2&!A3&A4	0.0100	n/a	n/a	-0.0209
A1(LH)	!A2&A3&!A4	0.0100	n/a	n/a	-0.0209
A1(LH)	!A2&A3&A4	0.0100	n/a	n/a	-0.0209
A1(LH)	A2&!A3&!A4	0.0100	n/a	n/a	-0.0223
A1(LH)	A2&!A3&A4	0.0100	n/a	n/a	-0.0223
A1(LH)	A2&A3&!A4	0.0100	n/a	n/a	-0.0223
A1(LH)	A2&A3&A4	0.0100	n/a	n/a	-0.0222
A3(HL)	!A1&!A2&A4	0.0100	n/a	n/a	0.0520

continues on next page

Table 68 – continued from previous page

A3(HL)	!A1&A2&!A4	0.0100	n/a	n/a	0.0787
A3(HL)	!A1&A2&A4	0.0100	n/a	n/a	0.0439
A3(HL)	A1&!A2&!A4	0.0100	n/a	n/a	0.0788
A3(HL)	A1&!A2&A4	0.0100	n/a	n/a	0.0434
A3(HL)	A1&A2&!A4	0.0100	n/a	n/a	0.0787
A3(HL)	A1&A2&A4	0.0100	n/a	n/a	0.0439
A2(HL)	!A1&!A3&A4	0.0100	n/a	n/a	0.1212
A2(HL)	!A1&A3&!A4	0.0100	n/a	n/a	0.0676
A2(HL)	!A1&A3&A4	0.0100	n/a	n/a	0.0676
A2(HL)	A1&!A3&!A4	0.0100	n/a	n/a	0.0785
A2(HL)	A1&!A3&A4	0.0100	n/a	n/a	0.0435
A2(HL)	A1&A3&!A4	0.0100	n/a	n/a	0.0431
A2(HL)	A1&A3&A4	0.0100	n/a	n/a	0.0431
A4(LH)	!A1&!A2&A3	0.0100	n/a	n/a	-0.0700
A4(LH)	!A1&A2&!A3	0.0100	n/a	n/a	-0.0649
A4(LH)	!A1&A2&A3	0.0100	n/a	n/a	-0.0730
A4(LH)	A1&!A2&!A3	0.0100	n/a	n/a	-0.0642
A4(LH)	A1&!A2&A3	0.0100	n/a	n/a	-0.0725
A4(LH)	A1&A2&!A3	0.0100	n/a	n/a	-0.0649
A4(LH)	A1&A2&A3	0.0100	n/a	n/a	-0.0730
A1(HL)	!A2&!A3&A4	0.0100	n/a	n/a	0.1734
A1(HL)	!A2&A3&!A4	0.0100	n/a	n/a	0.1199
A1(HL)	!A2&A3&A4	0.0100	n/a	n/a	0.1199
A1(HL)	A2&!A3&!A4	0.0100	n/a	n/a	0.0537
A1(HL)	A2&!A3&A4	0.0100	n/a	n/a	0.0537
A1(HL)	A2&A3&!A4	0.0100	n/a	n/a	0.0537
A1(HL)	A2&A3&A4	0.0100	n/a	n/a	0.0537
A4(HL)	!A1&!A2&A3	0.0100	n/a	n/a	0.0786
A4(HL)	!A1&A2&!A3	0.0100	n/a	n/a	0.0787
A4(HL)	!A1&A2&A3	0.0100	n/a	n/a	0.0786
A4(HL)	A1&!A2&!A3	0.0100	n/a	n/a	0.0787
A4(HL)	A1&!A2&A3	0.0100	n/a	n/a	0.0786
A4(HL)	A1&A2&!A3	0.0100	n/a	n/a	0.0787
A4(HL)	A1&A2&A3	0.0100	n/a	n/a	0.0786

LEAKAGE POWER

When Condition	Power (nW)
!A1&!A2&!A3&!A4	0.2707
!A1&!A2&!A3&A4	0.3150
!A1&!A2&A3&!A4	0.2450
!A1&!A2&A3&A4	0.2450
!A1&A2&!A3&!A4	0.1743
!A1&A2&!A3&A4	0.1742
!A1&A2&A3&!A4	0.1742
!A1&A2&A3&A4	0.1742
A1&!A2&!A3&!A4	0.1030
A1&!A2&!A3&A4	0.1029
A1&!A2&A3&!A4	0.1029
A1&!A2&A3&A4	0.1029
A1&A2&!A3&!A4	0.1030
A1&A2&!A3&A4	0.1029
A1&A2&A3&!A4	0.1029
A1&A2&A3&A4	0.1029

gf180mcu_fd_sc_mcu7t5v0__nor4_4

gf180mcu_fd_sc_mcu7t5v0__nor4_4 symbol

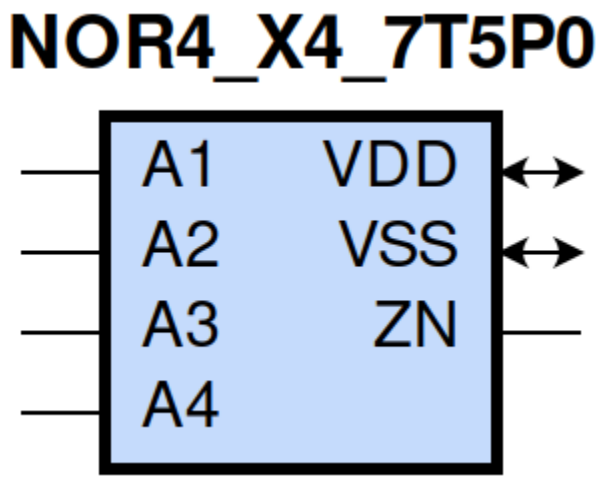

gf180mcu_fd_sc_mcu7t5v0__nor4_4 schematic

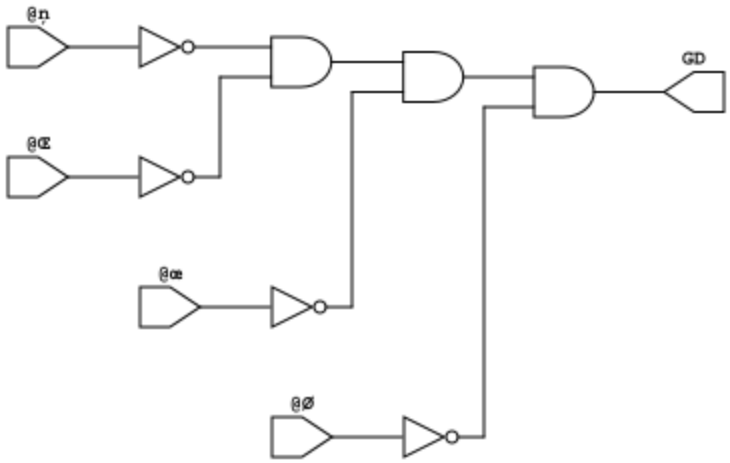

gf180mcu_fd_sc_mcu7t5v0__nor4_4 layout

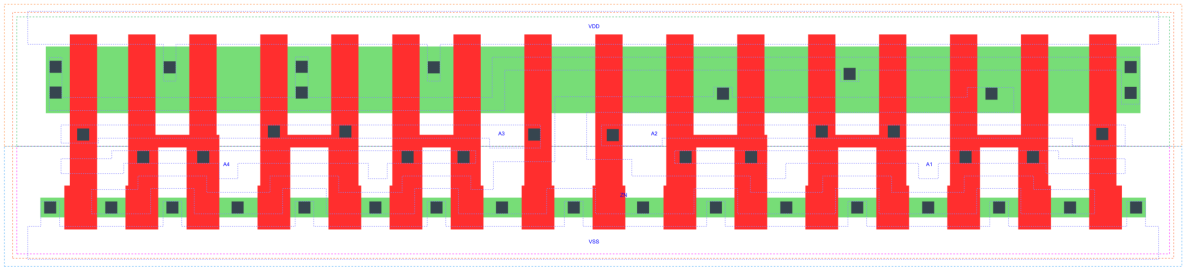

NOR4_X4 is a 4-input NOR, NOR(A1,A2,A3,A4), 4X drive strength

Attributes

Attribute	Value
area	81.222400 μm^2

OUTPUT FUNCTIONS

Output Pin	Function
ZN	((!A1)&(!A2)&(!A3)&(!A4))

TRUTH TABLE FOR ZN

A1	A2	A3	A4	ZN
0	0	0	0	1
1	?	?	?	0
?	1	?	?	0
?	?	1	?	0
?	?	?	1	0

FUNCTIONAL SCHEMATIC

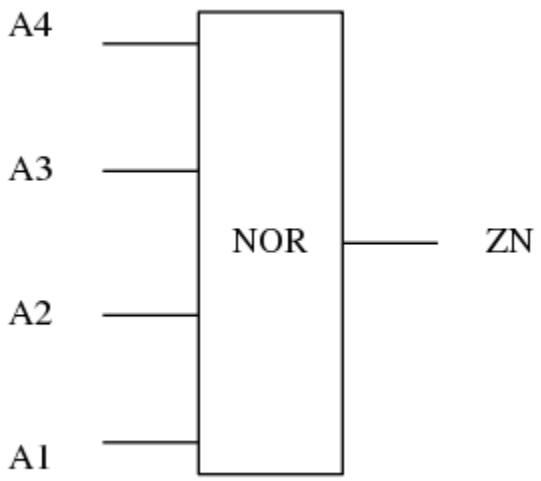

PIN CAPACITANCE (pf)

Pin	Type	Capacitance (pf)
A4	input	0.0154
A3	input	0.0158
A2	input	0.0160
A1	input	0.0162

DELAY AND OUTPUT TRANSITION TIME corresponding to min slew and load

Input Pin	Output	When Condition	Tin (ns)	Out Load (pf)	Delay (ns)	Tout (ns)
A4(LH)	ZN(HL)	!A1&!A2&!A3	0.0100	0.0010	0.1360	0.1087
A4(HL)	ZN(LH)	!A1&!A2&!A3	0.0100	0.0010	0.3406	0.1923
A3(LH)	ZN(HL)	!A1&!A2&!A4	0.0100	0.0010	0.1357	0.0973
A3(HL)	ZN(LH)	!A1&!A2&!A4	0.0100	0.0010	0.3148	0.1922
A2(HL)	ZN(LH)	!A1&!A3&!A4	0.0100	0.0010	0.2215	0.1867
A2(LH)	ZN(HL)	!A1&!A3&!A4	0.0100	0.0010	0.1155	0.0712
A1(HL)	ZN(LH)	!A2&!A3&!A4	0.0100	0.0010	0.1304	0.1609
A1(LH)	ZN(HL)	!A2&!A3&!A4	0.0100	0.0010	0.0813	0.0475

DYNAMIC ENERGY

Input Pin	When Condition	Tin (ns)	Output	Out Load (pf)	Energy (uW/MHz)
A1	!A2&!A3&!A4	0.0100	ZN(LH)	0.0010	0.5604
A4	!A1&!A2&!A3	0.0100	ZN(HL)	0.0010	0.3196
A2	!A1&!A3&!A4	0.0100	ZN(LH)	0.0010	0.6814
A3	!A1&!A2&!A4	0.0100	ZN(HL)	0.0010	0.2231
A1	!A2&!A3&!A4	0.0100	ZN(HL)	0.0010	-0.0167
A2	!A1&!A3&!A4	0.0100	ZN(HL)	0.0010	0.0982
A4	!A1&!A2&!A3	0.0100	ZN(LH)	0.0010	1.0107
A3	!A1&!A2&!A4	0.0100	ZN(LH)	0.0010	0.8931
A3(LH)	!A1&!A2&A4	0.0100	n/a	n/a	-0.0535
A3(LH)	!A1&A2&!A4	0.0100	n/a	n/a	-0.1240
A3(LH)	!A1&A2&A4	0.0100	n/a	n/a	-0.1064
A3(LH)	A1&!A2&!A4	0.0100	n/a	n/a	-0.1226
A3(LH)	A1&!A2&A4	0.0100	n/a	n/a	-0.1053
A3(LH)	A1&A2&!A4	0.0100	n/a	n/a	-0.1364
A3(LH)	A1&A2&A4	0.0100	n/a	n/a	-0.1265
A2(LH)	!A1&!A3&A4	0.0100	n/a	n/a	-0.0441
A2(LH)	!A1&A3&!A4	0.0100	n/a	n/a	-0.0434
A2(LH)	!A1&A3&A4	0.0100	n/a	n/a	-0.0434
A2(LH)	A1&!A3&!A4	0.0100	n/a	n/a	-0.1296
A2(LH)	A1&!A3&A4	0.0100	n/a	n/a	-0.0905
A2(LH)	A1&A3&!A4	0.0100	n/a	n/a	-0.0995
A2(LH)	A1&A3&A4	0.0100	n/a	n/a	-0.0940
A1(LH)	!A2&!A3&A4	0.0100	n/a	n/a	-0.0414
A1(LH)	!A2&A3&!A4	0.0100	n/a	n/a	-0.0412
A1(LH)	!A2&A3&A4	0.0100	n/a	n/a	-0.0411
A1(LH)	A2&!A3&!A4	0.0100	n/a	n/a	-0.0449
A1(LH)	A2&!A3&A4	0.0100	n/a	n/a	-0.0449
A1(LH)	A2&A3&!A4	0.0100	n/a	n/a	-0.0448
A1(LH)	A2&A3&A4	0.0100	n/a	n/a	-0.0449
A3(HL)	!A1&!A2&A4	0.0100	n/a	n/a	0.1042
A3(HL)	!A1&A2&!A4	0.0100	n/a	n/a	0.1564
A3(HL)	!A1&A2&A4	0.0100	n/a	n/a	0.0839
A3(HL)	A1&!A2&!A4	0.0100	n/a	n/a	0.1565
A3(HL)	A1&!A2&A4	0.0100	n/a	n/a	0.0865

continues on next page

Table 69 – continued from previous page

A3(HL)	A1&A2&!A4	0.0100	n/a	n/a	0.1564
A3(HL)	A1&A2&A4	0.0100	n/a	n/a	0.0839
A2(HL)	!A1&!A3&A4	0.0100	n/a	n/a	0.2330
A2(HL)	!A1&A3&!A4	0.0100	n/a	n/a	0.1254
A2(HL)	!A1&A3&A4	0.0100	n/a	n/a	0.1254
A2(HL)	A1&!A3&!A4	0.0100	n/a	n/a	0.1566
A2(HL)	A1&!A3&A4	0.0100	n/a	n/a	0.0863
A2(HL)	A1&A3&!A4	0.0100	n/a	n/a	0.0849
A2(HL)	A1&A3&A4	0.0100	n/a	n/a	0.0849
A4(LH)	!A1&!A2&A3	0.0100	n/a	n/a	-0.1401
A4(LH)	!A1&A2&!A3	0.0100	n/a	n/a	-0.1277
A4(LH)	!A1&A2&A3	0.0100	n/a	n/a	-0.1443
A4(LH)	A1&!A2&!A3	0.0100	n/a	n/a	-0.1276
A4(LH)	A1&!A2&A3	0.0100	n/a	n/a	-0.1443
A4(LH)	A1&A2&!A3	0.0100	n/a	n/a	-0.1277
A4(LH)	A1&A2&A3	0.0100	n/a	n/a	-0.1444
A1(HL)	!A2&!A3&A4	0.0100	n/a	n/a	0.3552
A1(HL)	!A2&A3&!A4	0.0100	n/a	n/a	0.2479
A1(HL)	!A2&A3&A4	0.0100	n/a	n/a	0.2478
A1(HL)	A2&!A3&!A4	0.0100	n/a	n/a	0.1247
A1(HL)	A2&!A3&A4	0.0100	n/a	n/a	0.1247
A1(HL)	A2&A3&!A4	0.0100	n/a	n/a	0.1247
A1(HL)	A2&A3&A4	0.0100	n/a	n/a	0.1246
A4(HL)	!A1&!A2&A3	0.0100	n/a	n/a	0.1562
A4(HL)	!A1&A2&!A3	0.0100	n/a	n/a	0.1558
A4(HL)	!A1&A2&A3	0.0100	n/a	n/a	0.1562
A4(HL)	A1&!A2&!A3	0.0100	n/a	n/a	0.1559
A4(HL)	A1&!A2&A3	0.0100	n/a	n/a	0.1562
A4(HL)	A1&A2&!A3	0.0100	n/a	n/a	0.1558
A4(HL)	A1&A2&A3	0.0100	n/a	n/a	0.1562

LEAKAGE POWER

When Condition	Power (nW)
!A1&!A2&!A3&!A4	0.4914
!A1&!A2&!A3&A4	0.5799
!A1&!A2&A3&!A4	0.4399
!A1&!A2&A3&A4	0.4399
!A1&A2&!A3&!A4	0.2985
!A1&A2&!A3&A4	0.2983
!A1&A2&A3&!A4	0.2983
!A1&A2&A3&A4	0.2983
A1&!A2&!A3&!A4	0.1560
A1&!A2&!A3&A4	0.1558
A1&!A2&A3&!A4	0.1558
A1&!A2&A3&A4	0.1558
A1&A2&!A3&!A4	0.1560
A1&A2&!A3&A4	0.1558
A1&A2&A3&!A4	0.1557
A1&A2&A3&A4	0.1557

gf180mcu_fd_sc_mcu7t5v0__oai21_1

gf180mcu_fd_sc_mcu7t5v0__oai21_1 symbol

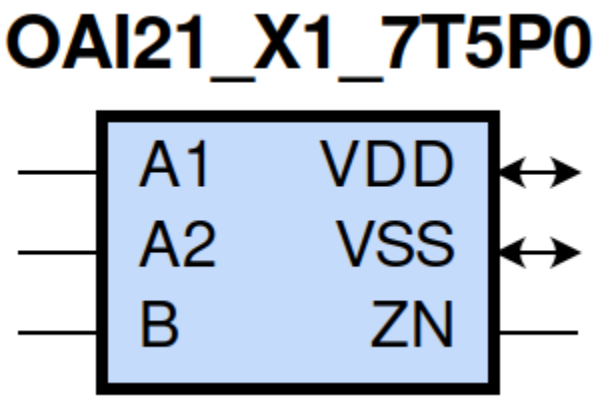

gf180mcu_fd_sc_mcu7t5v0__oai21_1 schematic

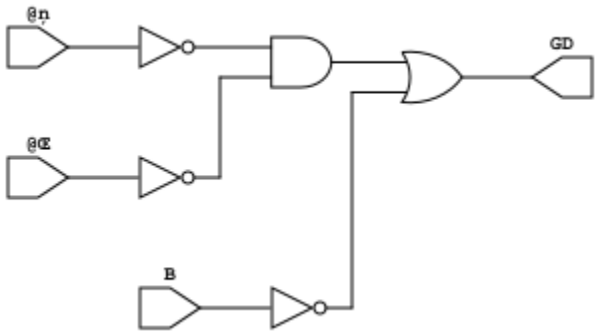

gf180mcu_fd_sc_mcu7t5v0__oai21_1 layout

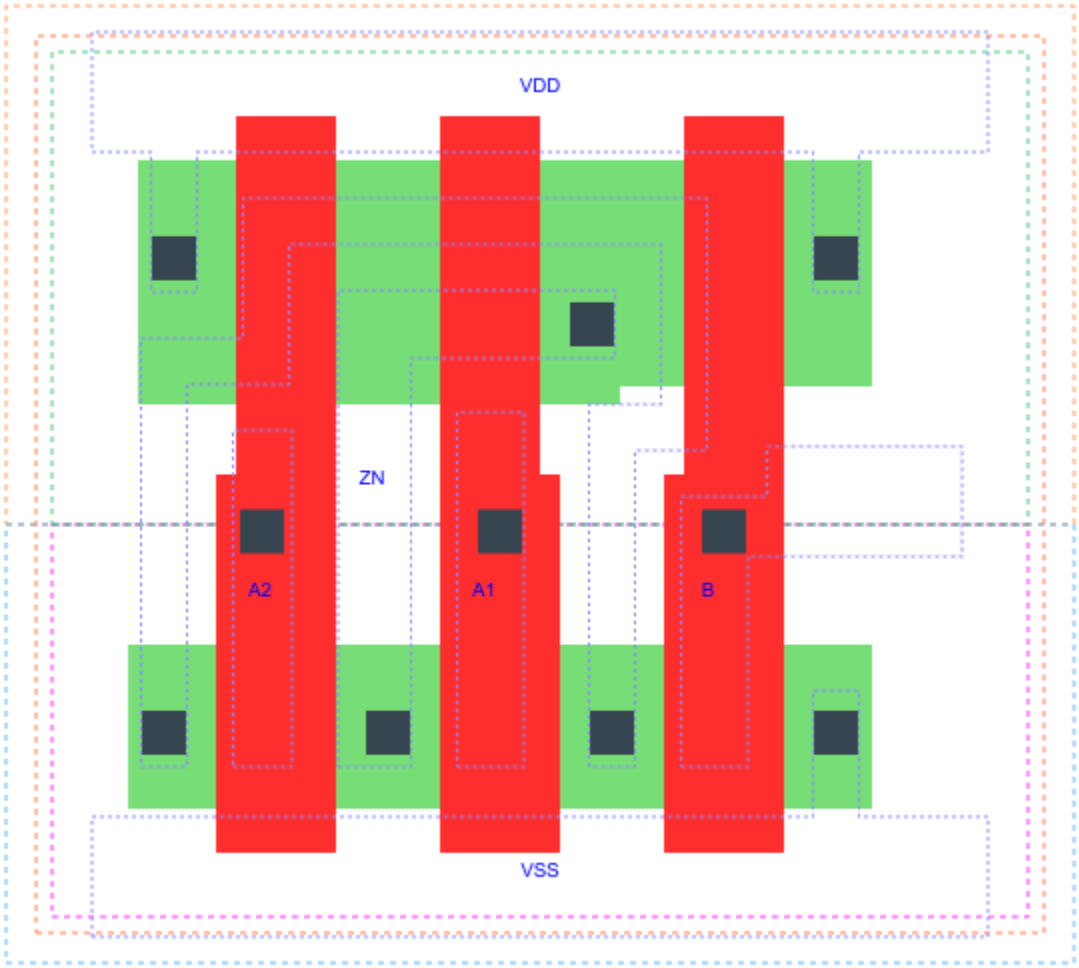

OAI21_X1 is a 2-input OR into 2-input NAND, NAND[OR(A1,A2),B], 1X drive strength

Attributes

Attribute	Value
area	17.561600 μm^2

OUTPUT FUNCTIONS

Output Pin	Function
ZN	(((!A1)&(!A2))|(!B))

TRUTH TABLE FOR ZN

A1	A2	B	ZN
0	0	?	1
?	?	0	1
1	?	1	0
?	1	1	0

FUNCTIONAL SCHEMATIC

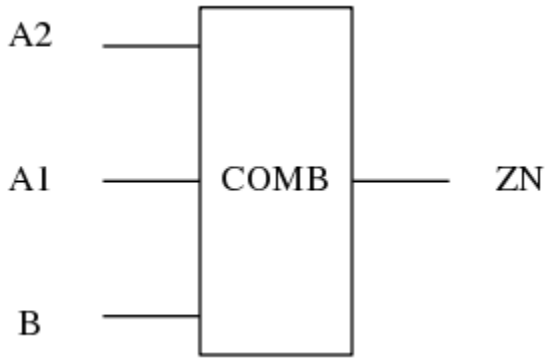

PIN CAPACITANCE (pf)

Pin	Type	Capacitance (pf)
A2	input	0.0048
A1	input	0.0050
B	input	0.0048

DELAY AND OUTPUT TRANSITION TIME corresponding to min slew and load

Input Pin	Output	When Condition	Tin (ns)	Out Load (pf)	Delay (ns)	Tout (ns)
A2(HL)	ZN(LH)	!A1&B	0.0100	0.0010	0.1359	0.0852
A2(LH)	ZN(HL)	!A1&B	0.0100	0.0010	0.0836	0.0565
A1(HL)	ZN(LH)	!A2&B	0.0100	0.0010	0.1115	0.0848
A1(LH)	ZN(HL)	!A2&B	0.0100	0.0010	0.0633	0.0398
B(LH)	ZN(HL)	!A1&A2	0.0100	0.0010	0.1179	0.0564
B(LH)	ZN(HL)	A1&!A2	0.0100	0.0010	0.0949	0.0409
B(LH)	ZN(HL)	A1&A2	0.0100	0.0010	0.0814	0.0392
B(HL)	ZN(LH)	!A1&A2	0.0100	0.0010	0.1198	0.1084
B(HL)	ZN(LH)	A1&!A2	0.0100	0.0010	0.1130	0.0836
B(HL)	ZN(LH)	A1&A2	0.0100	0.0010	0.1295	0.0949

DYNAMIC ENERGY

Input Pin	When Condition	Tin (ns)	Output	Out Load (pf)	Energy (uW/MHz)
A1	!A2&B	0.0100	ZN(LH)	0.0010	0.1224
B	!A1&A2	0.0100	ZN(HL)	0.0010	0.0335
B	A1&!A2	0.0100	ZN(HL)	0.0010	0.0086
B	A1&A2	0.0100	ZN(HL)	0.0010	0.0086
A2	!A1&B	0.0100	ZN(LH)	0.0010	0.1524
A1	!A2&B	0.0100	ZN(HL)	0.0010	0.0094
B	!A1&A2	0.0100	ZN(LH)	0.0010	0.2483
B	A1&!A2	0.0100	ZN(LH)	0.0010	0.2185
B	A1&A2	0.0100	ZN(LH)	0.0010	0.2411
A2	!A1&B	0.0100	ZN(HL)	0.0010	0.0311
B(HL)	!A1&!A2	0.0100	n/a	n/a	0.0410
A2(LH)	!A1&!B	0.0100	n/a	n/a	0.0305
A2(LH)	A1&!B	0.0100	n/a	n/a	-0.0426
A2(LH)	A1&B	0.0100	n/a	n/a	-0.0329
A1(LH)	!A2&!B	0.0100	n/a	n/a	0.0300
A1(LH)	A2&!B	0.0100	n/a	n/a	-0.0431
A1(LH)	A2&B	0.0100	n/a	n/a	-0.0111
A2(HL)	!A1&!B	0.0100	n/a	n/a	0.0441
A2(HL)	A1&!B	0.0100	n/a	n/a	0.0446
A2(HL)	A1&B	0.0100	n/a	n/a	0.0392
B(LH)	!A1&!A2	0.0100	n/a	n/a	-0.0367
A1(HL)	!A2&!B	0.0100	n/a	n/a	0.0443
A1(HL)	A2&!B	0.0100	n/a	n/a	0.0447
A1(HL)	A2&B	0.0100	n/a	n/a	0.0264

LEAKAGE POWER

When Condition	Power (nW)
!A1&!A2&!B	0.1004
!A1&!A2&B	0.1009
!A1&A2&!B	0.1596
A1&!A2&!B	0.1596
A1&A2&!B	0.1599
!A1&A2&B	0.1386
A1&!A2&B	0.1029
A1&A2&B	0.1029

gf180mcu_fd_sc_mcu7t5v0__oai21_2

gf180mcu_fd_sc_mcu7t5v0__oai21_2 symbol

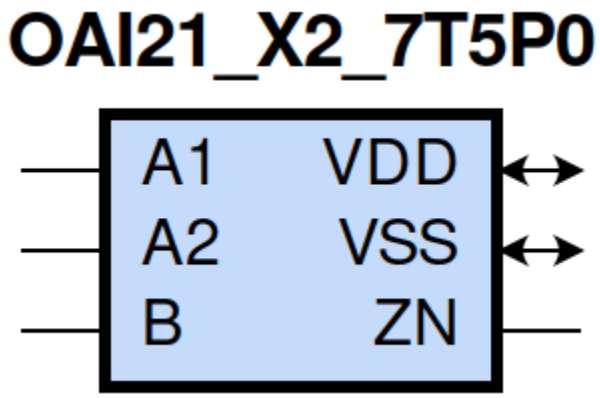

gf180mcu_fd_sc_mcu7t5v0__oai21_2 schematic

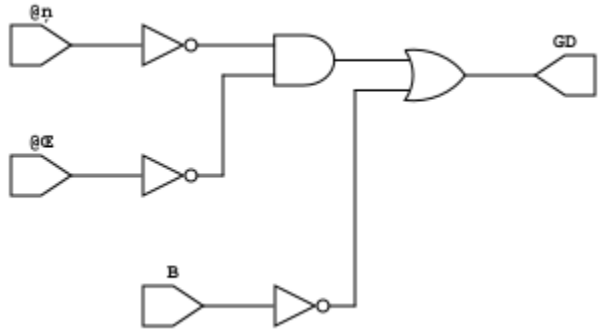

gf180mcu_fd_sc_mcu7t5v0__oai21_2 layout

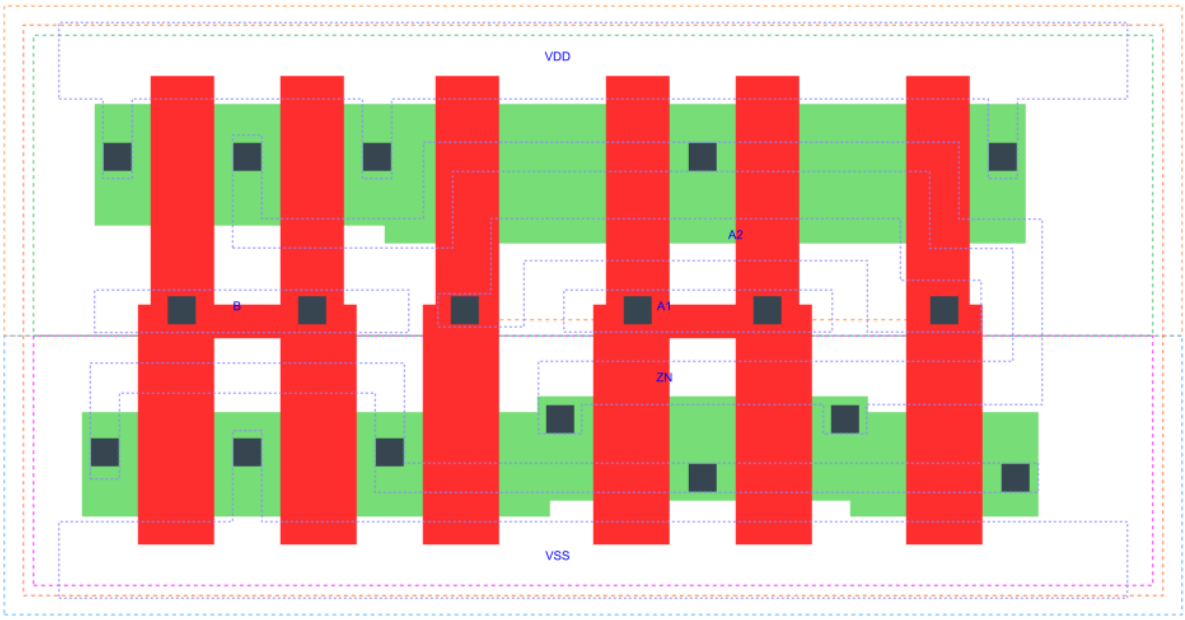

OAI21_X2 is a 2-input OR into 2-input NAND, NAND[OR(A1,A2),B], 2X drive strength

Attributes

Attribute	Value
area	32.928000 μm^2

OUTPUT FUNCTIONS

Output Pin	Function
ZN	(((!A1)&(!A2))|(!B))

TRUTH TABLE FOR ZN

A1	A2	B	ZN
0	0	?	1
?	?	0	1
1	?	1	0
?	1	1	0

FUNCTIONAL SCHEMATIC

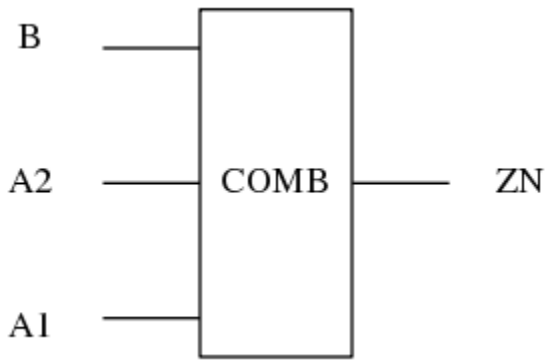

PIN CAPACITANCE (pf)

Pin	Type	Capacitance (pf)
B	input	0.0085
A2	input	0.0095
A1	input	0.0091

DELAY AND OUTPUT TRANSITION TIME corresponding to min slew and load

Input Pin	Output	When Condition	Tin (ns)	Out Load (pf)	Delay (ns)	Tout (ns)
B(LH)	ZN(HL)	!A1&A2	0.0100	0.0010	0.1064	0.0541
B(LH)	ZN(HL)	A1&!A2	0.0100	0.0010	0.0847	0.0386
B(LH)	ZN(HL)	A1&A2	0.0100	0.0010	0.0730	0.0366
B(HL)	ZN(LH)	!A1&A2	0.0100	0.0010	0.1295	0.1168
B(HL)	ZN(LH)	A1&!A2	0.0100	0.0010	0.1227	0.0891
B(HL)	ZN(LH)	A1&A2	0.0100	0.0010	0.1400	0.1014
A2(HL)	ZN(LH)	!A1&B	0.0100	0.0010	0.1475	0.0899
A2(LH)	ZN(HL)	!A1&B	0.0100	0.0010	0.0796	0.0545
A1(HL)	ZN(LH)	!A2&B	0.0100	0.0010	0.1184	0.0896
A1(LH)	ZN(HL)	!A2&B	0.0100	0.0010	0.0603	0.0380

DYNAMIC ENERGY

Input Pin	When Condition	Tin (ns)	Output	Out Load (pf)	Energy (uW/MHz)
A1	!A2&B	0.0100	ZN(LH)	0.0010	0.2649
B	!A1&A2	0.0100	ZN(HL)	0.0010	0.0640
B	A1&!A2	0.0100	ZN(HL)	0.0010	0.0080
B	A1&A2	0.0100	ZN(HL)	0.0010	0.0081
A2	!A1&B	0.0100	ZN(LH)	0.0010	0.3191
A1	!A2&B	0.0100	ZN(HL)	0.0010	0.0067
B	!A1&A2	0.0100	ZN(LH)	0.0010	0.4705
B	A1&!A2	0.0100	ZN(LH)	0.0010	0.4164
B	A1&A2	0.0100	ZN(LH)	0.0010	0.4613
A2	!A1&B	0.0100	ZN(HL)	0.0010	0.0577
B(HL)	!A1&!A2	0.0100	n/a	n/a	0.0717
A2(LH)	!A1&!B	0.0100	n/a	n/a	0.0324
A2(LH)	A1&!B	0.0100	n/a	n/a	-0.0770
A2(LH)	A1&B	0.0100	n/a	n/a	-0.0584
A1(LH)	!A2&!B	0.0100	n/a	n/a	0.0318
A1(LH)	A2&!B	0.0100	n/a	n/a	-0.0779
A1(LH)	A2&B	0.0100	n/a	n/a	-0.0203
A2(HL)	!A1&!B	0.0100	n/a	n/a	0.0795
A2(HL)	A1&!B	0.0100	n/a	n/a	0.0826
A2(HL)	A1&B	0.0100	n/a	n/a	0.0704
B(LH)	!A1&!A2	0.0100	n/a	n/a	-0.0616
A1(HL)	!A2&!B	0.0100	n/a	n/a	0.0799
A1(HL)	A2&!B	0.0100	n/a	n/a	0.0829
A1(HL)	A2&B	0.0100	n/a	n/a	0.0585

LEAKAGE POWER

When Condition	Power (nW)
!A1&!A2&!B	0.1508
!A1&!A2&B	0.1518
!A1&A2&!B	0.2704
A1&!A2&!B	0.2704
A1&A2&!B	0.2710
!A1&A2&B	0.2269
A1&!A2&B	0.1555
A1&A2&B	0.1555

gf180mcu_fd_sc_mcu7t5v0__oai21_4

gf180mcu_fd_sc_mcu7t5v0__oai21_4 symbol

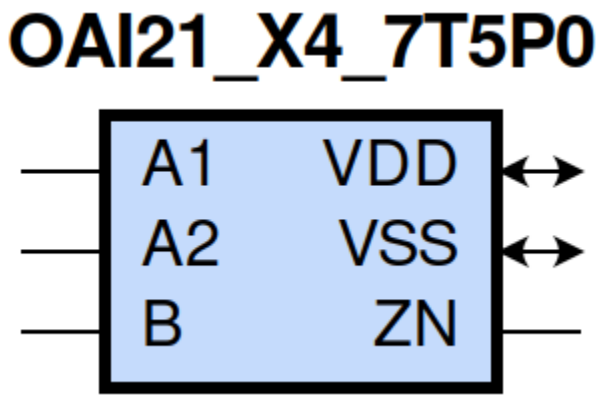

gf180mcu_fd_sc_mcu7t5v0__oai21_4 schematic

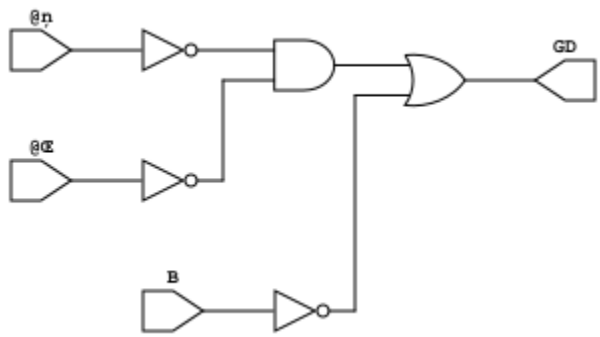

gf180mcu_fd_sc_mcu7t5v0__oai21_4 layout

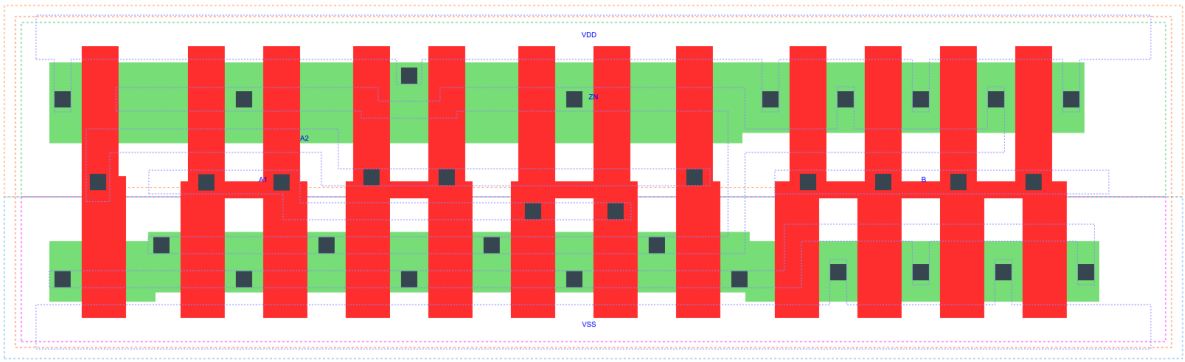

OAI21_X4 is a 2-input OR into 2-input NAND, NAND[OR(A1,A2),B], 4X drive strength

Attributes

Attribute	Value
area	59.270400 μm^2

OUTPUT FUNCTIONS

Output Pin	Function
ZN	(((!A1)&(!A2))|(!B))

TRUTH TABLE FOR ZN

A1	A2	B	ZN
0	0	?	1
?	?	0	1
1	?	1	0
?	1	1	0

FUNCTIONAL SCHEMATIC

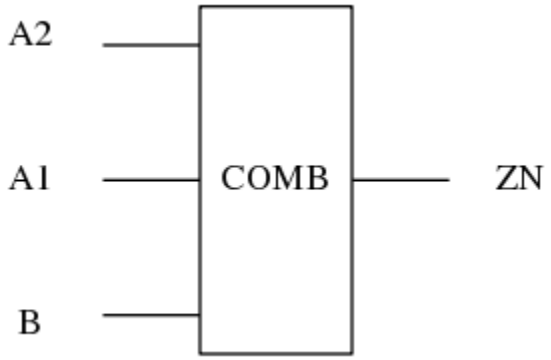

PIN CAPACITANCE (pf)

Pin	Type	Capacitance (pf)
A2	input	0.0184
A1	input	0.0186
B	input	0.0165

DELAY AND OUTPUT TRANSITION TIME corresponding to min slew and load

Input Pin	Output	When Condition	Tin (ns)	Out Load (pf)	Delay (ns)	Tout (ns)
A2(HL)	ZN(LH)	!A1&B	0.0100	0.0010	0.1356	0.0809
A2(LH)	ZN(HL)	!A1&B	0.0100	0.0010	0.0745	0.0499
A1(HL)	ZN(LH)	!A2&B	0.0100	0.0010	0.1076	0.0804
A1(LH)	ZN(HL)	!A2&B	0.0100	0.0010	0.0557	0.0339
B(LH)	ZN(HL)	!A1&A2	0.0100	0.0010	0.1000	0.0494
B(LH)	ZN(HL)	A1&!A2	0.0100	0.0010	0.0792	0.0346
B(LH)	ZN(HL)	A1&A2	0.0100	0.0010	0.0687	0.0335
B(HL)	ZN(LH)	!A1&A2	0.0100	0.0010	0.1211	0.1089
B(HL)	ZN(LH)	A1&!A2	0.0100	0.0010	0.1141	0.0819
B(HL)	ZN(LH)	A1&A2	0.0100	0.0010	0.1314	0.0942

DYNAMIC ENERGY

Input Pin	When Condition	Tin (ns)	Output	Out Load (pf)	Energy (uW/MHz)
A1	!A2&B	0.0100	ZN(LH)	0.0010	0.4986
B	!A1&A2	0.0100	ZN(HL)	0.0010	0.1219
B	A1&!A2	0.0100	ZN(HL)	0.0010	0.0155
B	A1&A2	0.0100	ZN(HL)	0.0010	0.0158
A2	!A1&B	0.0100	ZN(LH)	0.0010	0.6067
A1	!A2&B	0.0100	ZN(HL)	0.0010	0.0128
B	!A1&A2	0.0100	ZN(LH)	0.0010	0.8996
B	A1&!A2	0.0100	ZN(LH)	0.0010	0.7912
B	A1&A2	0.0100	ZN(LH)	0.0010	0.8815
A2	!A1&B	0.0100	ZN(HL)	0.0010	0.1089
B(HL)	!A1&!A2	0.0100	n/a	n/a	0.1436
A2(LH)	!A1&!B	0.0100	n/a	n/a	0.0534
A2(LH)	A1&!B	0.0100	n/a	n/a	-0.1542
A2(LH)	A1&B	0.0100	n/a	n/a	-0.1170
A1(LH)	!A2&!B	0.0100	n/a	n/a	0.0524
A1(LH)	A2&!B	0.0100	n/a	n/a	-0.1558
A1(LH)	A2&B	0.0100	n/a	n/a	-0.0404
A2(HL)	!A1&!B	0.0100	n/a	n/a	0.1590
A2(HL)	A1&!B	0.0100	n/a	n/a	0.1660
A2(HL)	A1&B	0.0100	n/a	n/a	0.1408
B(LH)	!A1&!A2	0.0100	n/a	n/a	-0.1230
A1(HL)	!A2&!B	0.0100	n/a	n/a	0.1596
A1(HL)	A2&!B	0.0100	n/a	n/a	0.1663
A1(HL)	A2&B	0.0100	n/a	n/a	0.1111

LEAKAGE POWER

When Condition	Power (nW)
!A1&!A2&!B	0.2515
!A1&!A2&B	0.2536
!A1&A2&!B	0.4902
A1&!A2&!B	0.4902
A1&A2&!B	0.4914
!A1&A2&B	0.4037
A1&!A2&B	0.2610
A1&A2&B	0.2610

gf180mcu_fd_sc_mcu7t5v0__oai211_1

gf180mcu_fd_sc_mcu7t5v0__oai211_1 symbol

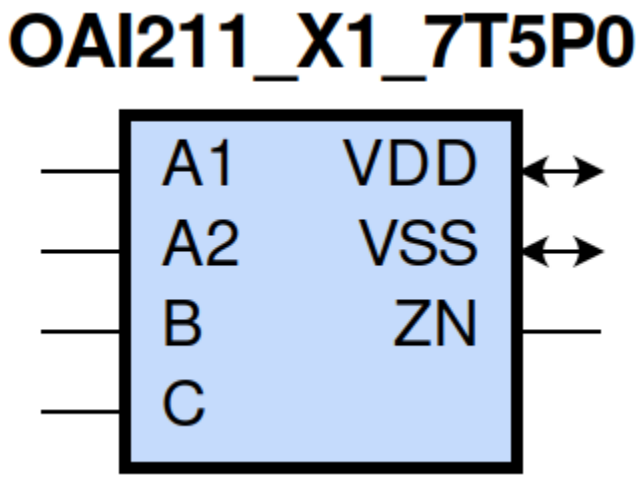

gf180mcu_fd_sc_mcu7t5v0__oai211_1 schematic

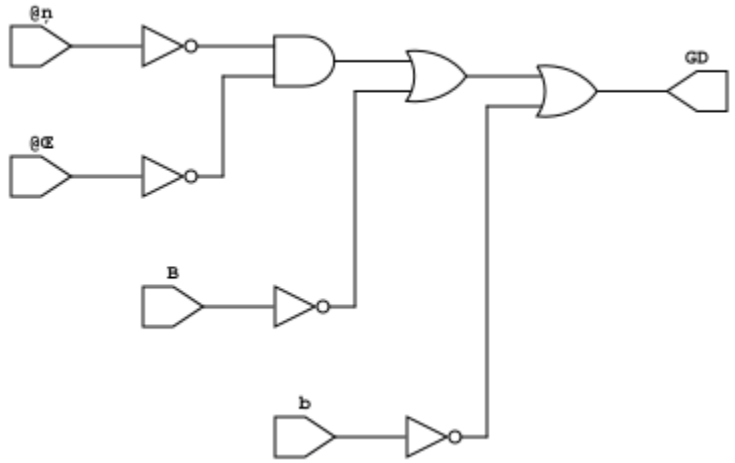

gf180mcu_fd_sc_mcu7t5v0__oai211_1 layout

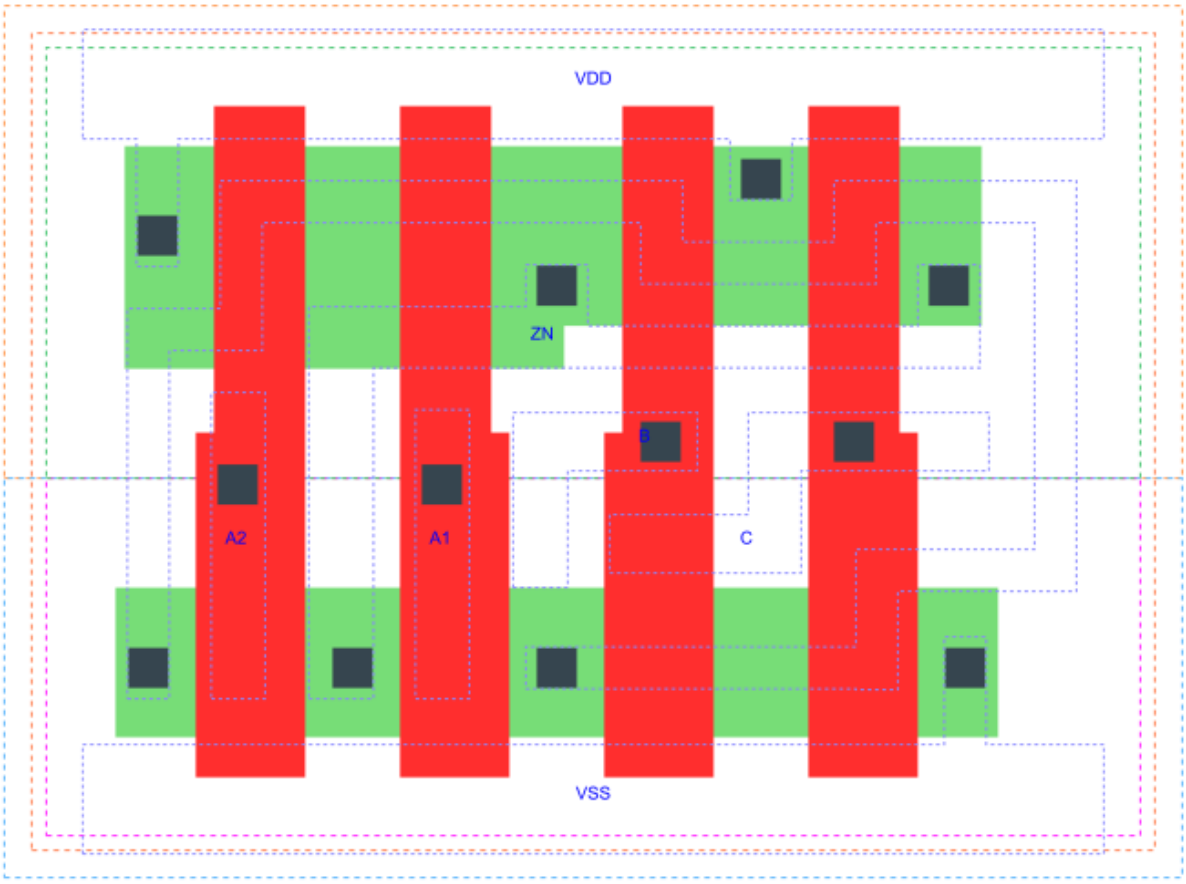

OAI211_X1 is a 2-input OR into 3-input NAND, NAND[OR(A1,A2),B,C], 1X drive strength

Attributes

Attribute	Value
area	21.952000 μm^2

OUTPUT FUNCTIONS

Output Pin	Function
ZN	(((!A1)&(!A2))|(!B)|(!C))

TRUTH TABLE FOR ZN

A1	A2	B	C	ZN
0	0	?	?	1
?	?	0	?	1
?	?	?	0	1
1	?	1	1	0
?	1	1	1	0

FUNCTIONAL SCHEMATIC

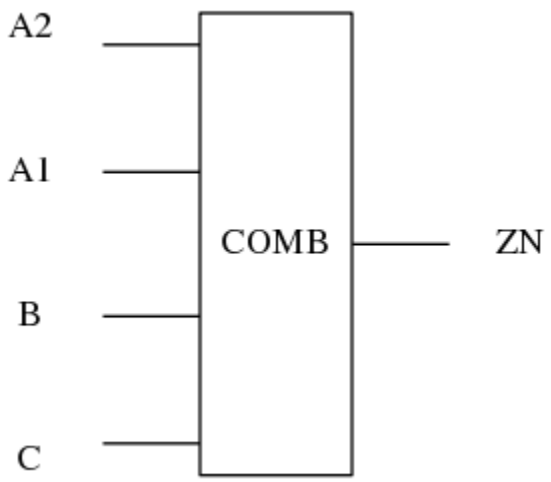

PIN CAPACITANCE (pf)

Pin	Type	Capacitance (pf)
A2	input	0.0048
A1	input	0.0049
B	input	0.0045
C	input	0.0047

DELAY AND OUTPUT TRANSITION TIME corresponding to min slew and load

Input Pin	Output	When Condition	Tin (ns)	Out Load (pf)	Delay (ns)	Tout (ns)
A2(HL)	ZN(LH)	!A1&B&C	0.0100	0.0010	0.1605	0.1068
A2(LH)	ZN(HL)	!A1&B&C	0.0100	0.0010	0.1166	0.0968
A1(HL)	ZN(LH)	!A2&B&C	0.0100	0.0010	0.1360	0.1067
A1(LH)	ZN(HL)	!A2&B&C	0.0100	0.0010	0.0877	0.0716
B(LH)	ZN(HL)	!A1&A2&C	0.0100	0.0010	0.1830	0.0990
B(LH)	ZN(HL)	A1&!A2&C	0.0100	0.0010	0.1498	0.0766
B(LH)	ZN(HL)	A1&A2&C	0.0100	0.0010	0.1310	0.0820
B(HL)	ZN(LH)	!A1&A2&C	0.0100	0.0010	0.1686	0.1494
B(HL)	ZN(LH)	A1&!A2&C	0.0100	0.0010	0.1602	0.1195
B(HL)	ZN(LH)	A1&A2&C	0.0100	0.0010	0.1793	0.1326
C(HL)	ZN(LH)	!A1&A2&B	0.0100	0.0010	0.1845	0.1687
C(HL)	ZN(LH)	A1&!A2&B	0.0100	0.0010	0.1749	0.1367
C(HL)	ZN(LH)	A1&A2&B	0.0100	0.0010	0.1975	0.1509
C(LH)	ZN(HL)	!A1&A2&B	0.0100	0.0010	0.1949	0.0995
C(LH)	ZN(HL)	A1&!A2&B	0.0100	0.0010	0.1617	0.0766
C(LH)	ZN(HL)	A1&A2&B	0.0100	0.0010	0.1430	0.0820

DYNAMIC ENERGY

Input Pin	When Condition	Tin (ns)	Output	Out Load (pf)	Energy (uW/MHz)
C	!A1&A2&B	0.0100	ZN(LH)	0.0010	0.3249
C	A1&!A2&B	0.0100	ZN(LH)	0.0010	0.2953
C	A1&A2&B	0.0100	ZN(LH)	0.0010	0.3174
C	!A1&A2&B	0.0100	ZN(HL)	0.0010	0.0536
C	A1&!A2&B	0.0100	ZN(HL)	0.0010	0.0288
C	A1&A2&B	0.0100	ZN(HL)	0.0010	0.0288
A1	!A2&B&C	0.0100	ZN(LH)	0.0010	0.1432
B	!A1&A2&C	0.0100	ZN(HL)	0.0010	0.0536
B	A1&!A2&C	0.0100	ZN(HL)	0.0010	0.0288
B	A1&A2&C	0.0100	ZN(HL)	0.0010	0.0287
A2	!A1&B&C	0.0100	ZN(LH)	0.0010	0.1733
A1	!A2&B&C	0.0100	ZN(HL)	0.0010	0.0269
B	!A1&A2&C	0.0100	ZN(LH)	0.0010	0.2875
B	A1&!A2&C	0.0100	ZN(LH)	0.0010	0.2579
B	A1&A2&C	0.0100	ZN(LH)	0.0010	0.2802
A2	!A1&B&C	0.0100	ZN(HL)	0.0010	0.0481
B(HL)	!A1&!A2&!C	0.0100	n/a	n/a	0.0464
B(HL)	!A1&!A2&C	0.0100	n/a	n/a	0.0392
B(HL)	!A1&A2&!C	0.0100	n/a	n/a	0.0324
B(HL)	A1&!A2&!C	0.0100	n/a	n/a	0.0326
B(HL)	A1&A2&!C	0.0100	n/a	n/a	0.0326
A2(LH)	!A1&!B&!C	0.0100	n/a	n/a	0.0498
A2(LH)	!A1&!B&C	0.0100	n/a	n/a	0.0499
A2(LH)	!A1&B&!C	0.0100	n/a	n/a	0.0932
A2(LH)	A1&!B&!C	0.0100	n/a	n/a	-0.0426
A2(LH)	A1&!B&C	0.0100	n/a	n/a	-0.0426

continues on next page

Table 70 – continued from previous page

A2(LH)	A1&B&!C	0.0100	n/a	n/a	-0.0426
A2(LH)	A1&B&C	0.0100	n/a	n/a	-0.0329
A1(LH)	!A2&!B&!C	0.0100	n/a	n/a	0.0493
A1(LH)	!A2&!B&C	0.0100	n/a	n/a	0.0494
A1(LH)	!A2&B&!C	0.0100	n/a	n/a	0.0928
A1(LH)	A2&!B&!C	0.0100	n/a	n/a	-0.0431
A1(LH)	A2&!B&C	0.0100	n/a	n/a	-0.0430
A1(LH)	A2&B&!C	0.0100	n/a	n/a	-0.0430
A1(LH)	A2&B&C	0.0100	n/a	n/a	-0.0111
C(HL)	!A1&!A2&!B	0.0100	n/a	n/a	0.0318
C(HL)	!A1&!A2&B	0.0100	n/a	n/a	0.0322
C(HL)	!A1&A2&!B	0.0100	n/a	n/a	0.0320
C(HL)	A1&!A2&!B	0.0100	n/a	n/a	0.0320
C(HL)	A1&A2&!B	0.0100	n/a	n/a	0.0320
A2(HL)	!A1&!B&!C	0.0100	n/a	n/a	0.0441
A2(HL)	!A1&!B&C	0.0100	n/a	n/a	0.0441
A2(HL)	!A1&B&!C	0.0100	n/a	n/a	0.0441
A2(HL)	A1&!B&!C	0.0100	n/a	n/a	0.0441
A2(HL)	A1&!B&C	0.0100	n/a	n/a	0.0441
A2(HL)	A1&B&!C	0.0100	n/a	n/a	0.0442
A2(HL)	A1&B&C	0.0100	n/a	n/a	0.0393
B(LH)	!A1&!A2&!C	0.0100	n/a	n/a	-0.0319
B(LH)	!A1&!A2&C	0.0100	n/a	n/a	-0.0318
B(LH)	!A1&A2&!C	0.0100	n/a	n/a	-0.0249
B(LH)	A1&!A2&!C	0.0100	n/a	n/a	-0.0249
B(LH)	A1&A2&!C	0.0100	n/a	n/a	-0.0249
A1(HL)	!A2&!B&!C	0.0100	n/a	n/a	0.0443
A1(HL)	!A2&!B&C	0.0100	n/a	n/a	0.0443
A1(HL)	!A2&B&!C	0.0100	n/a	n/a	0.0443
A1(HL)	A2&!B&!C	0.0100	n/a	n/a	0.0442
A1(HL)	A2&!B&C	0.0100	n/a	n/a	0.0442
A1(HL)	A2&B&!C	0.0100	n/a	n/a	0.0443
A1(HL)	A2&B&C	0.0100	n/a	n/a	0.0264
C(LH)	!A1&!A2&!B	0.0100	n/a	n/a	-0.0320
C(LH)	!A1&!A2&B	0.0100	n/a	n/a	-0.0318
C(LH)	!A1&A2&!B	0.0100	n/a	n/a	-0.0319
C(LH)	A1&!A2&!B	0.0100	n/a	n/a	-0.0320
C(LH)	A1&A2&!B	0.0100	n/a	n/a	-0.0320

LEAKAGE POWER

When Condition	Power (nW)
!A1&!A2&!B&!C	0.1004
!A1&!A2&!B&C	0.1004
!A1&!A2&B&!C	0.1005
!A1&!A2&B&C	0.1009
!A1&A2&!B&!C	0.1618
!A1&A2&!B&C	0.1620
!A1&A2&B&!C	0.2010
A1&!A2&!B&!C	0.1618
A1&!A2&!B&C	0.1620
A1&!A2&B&!C	0.2010
A1&A2&!B&!C	0.1622
A1&A2&!B&C	0.1629
A1&A2&B&!C	0.2014
!A1&A2&B&C	0.1648
A1&!A2&B&C	0.1292
A1&A2&B&C	0.1292

gf180mcu_fd_sc_mcu7t5v0__oai211_2

gf180mcu_fd_sc_mcu7t5v0__oai211_2 symbol

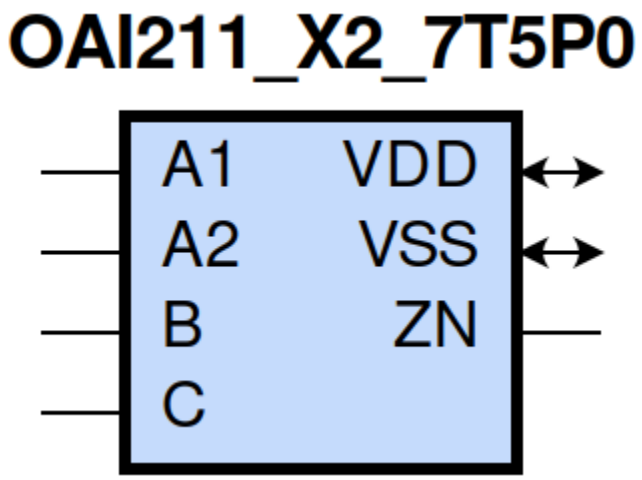

gf180mcu_fd_sc_mcu7t5v0__oai211_2 schematic

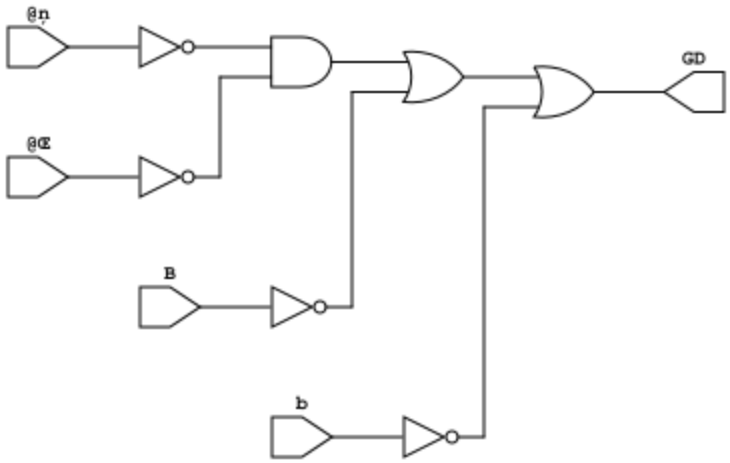

gf180mcu_fd_sc_mcu7t5v0__oai211_2 layout

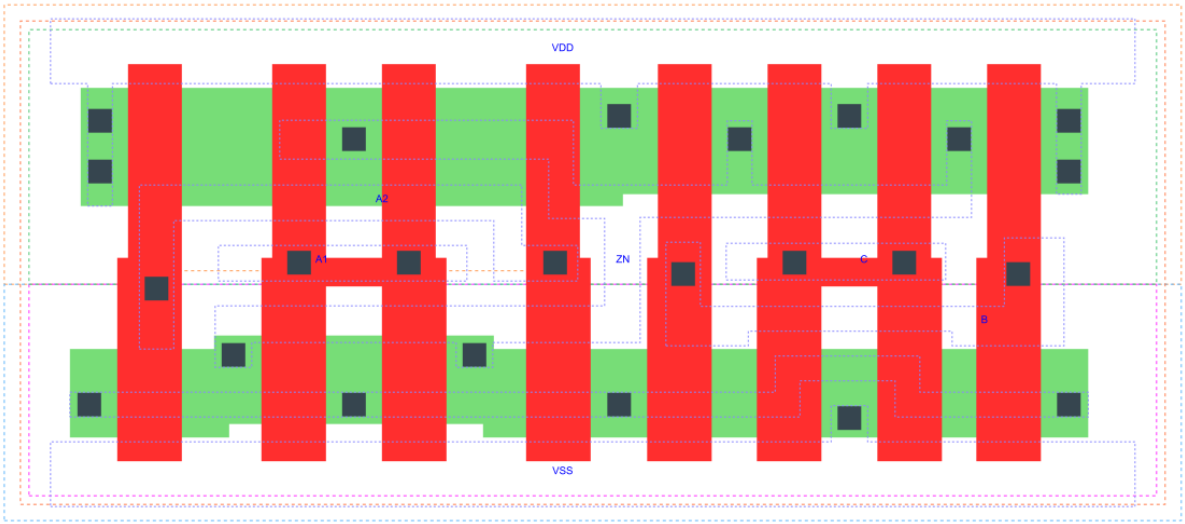

OAI211_X2 is a 2-input OR into 3-input NAND, NAND[OR(A1,A2),B,C], 2X drive strength

Attributes

Attribute	Value
area	39.513600 μm^2

OUTPUT FUNCTIONS

Output Pin	Function
ZN	(((!A1)&(!A2))|(!B)|(!C))

TRUTH TABLE FOR ZN

A1	A2	B	C	ZN
0	0	?	?	1
?	?	0	?	1
?	?	?	0	1
1	?	1	1	0
?	1	1	1	0

FUNCTIONAL SCHEMATIC

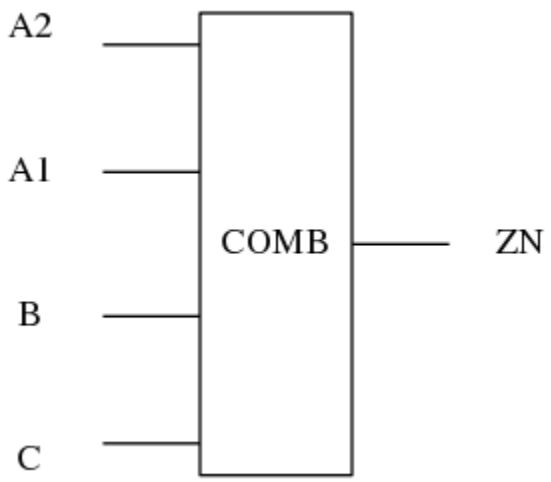

PIN CAPACITANCE (pf)

Pin	Type	Capacitance (pf)
A2	input	0.0095
A1	input	0.0091
B	input	0.0091
C	input	0.0086

DELAY AND OUTPUT TRANSITION TIME corresponding to min slew and load

Input Pin	Output	When Condition	Tin (ns)	Out Load (pf)	Delay (ns)	Tout (ns)
A2(HL)	ZN(LH)	!A1&B&C	0.0100	0.0010	0.1608	0.1014
A2(LH)	ZN(HL)	!A1&B&C	0.0100	0.0010	0.1071	0.0859
A1(HL)	ZN(LH)	!A2&B&C	0.0100	0.0010	0.1317	0.1012
A1(LH)	ZN(HL)	!A2&B&C	0.0100	0.0010	0.0789	0.0613
B(LH)	ZN(HL)	!A1&A2&C	0.0100	0.0010	0.1538	0.0864
B(LH)	ZN(HL)	A1&!A2&C	0.0100	0.0010	0.1223	0.0640
B(LH)	ZN(HL)	A1&A2&C	0.0100	0.0010	0.1081	0.0678
B(HL)	ZN(LH)	!A1&A2&C	0.0100	0.0010	0.1388	0.1222
B(HL)	ZN(LH)	A1&!A2&C	0.0100	0.0010	0.1323	0.0950
B(HL)	ZN(LH)	A1&A2&C	0.0100	0.0010	0.1491	0.1070
C(HL)	ZN(LH)	!A1&A2&B	0.0100	0.0010	0.1544	0.1414
C(HL)	ZN(LH)	A1&!A2&B	0.0100	0.0010	0.1467	0.1114
C(HL)	ZN(LH)	A1&A2&B	0.0100	0.0010	0.1666	0.1246
C(LH)	ZN(HL)	!A1&A2&B	0.0100	0.0010	0.1649	0.0862
C(LH)	ZN(HL)	A1&!A2&B	0.0100	0.0010	0.1334	0.0637
C(LH)	ZN(HL)	A1&A2&B	0.0100	0.0010	0.1192	0.0677

DYNAMIC ENERGY

Input Pin	When Condition	Tin (ns)	Output	Out Load (pf)	Energy (uW/MHz)
C	!A1&A2&B	0.0100	ZN(LH)	0.0010	0.5726
C	A1&!A2&B	0.0100	ZN(LH)	0.0010	0.5180
C	A1&A2&B	0.0100	ZN(LH)	0.0010	0.5622
C	!A1&A2&B	0.0100	ZN(HL)	0.0010	0.0848
C	A1&!A2&B	0.0100	ZN(HL)	0.0010	0.0289
C	A1&A2&B	0.0100	ZN(HL)	0.0010	0.0289
A1	!A2&B&C	0.0100	ZN(LH)	0.0010	0.2805
B	!A1&A2&C	0.0100	ZN(HL)	0.0010	0.0848
B	A1&!A2&C	0.0100	ZN(HL)	0.0010	0.0290
B	A1&A2&C	0.0100	ZN(HL)	0.0010	0.0289
A2	!A1&B&C	0.0100	ZN(LH)	0.0010	0.3349
A1	!A2&B&C	0.0100	ZN(HL)	0.0010	0.0289
B	!A1&A2&C	0.0100	ZN(LH)	0.0010	0.5019
B	A1&!A2&C	0.0100	ZN(LH)	0.0010	0.4476
B	A1&A2&C	0.0100	ZN(LH)	0.0010	0.4932
A2	!A1&B&C	0.0100	ZN(HL)	0.0010	0.0794
B(HL)	!A1&!A2&!C	0.0100	n/a	n/a	0.0980
B(HL)	!A1&!A2&C	0.0100	n/a	n/a	0.0808
B(HL)	!A1&A2&!C	0.0100	n/a	n/a	0.0677
B(HL)	A1&!A2&!C	0.0100	n/a	n/a	0.0681
B(HL)	A1&A2&!C	0.0100	n/a	n/a	0.0679
A2(LH)	!A1&!B&!C	0.0100	n/a	n/a	0.0391

continues on next page

Table 71 – continued from previous page

A2(LH)	!A1&!B&C	0.0100	n/a	n/a	0.0392
A2(LH)	!A1&B&!C	0.0100	n/a	n/a	0.1209
A2(LH)	A1&!B&!C	0.0100	n/a	n/a	-0.0771
A2(LH)	A1&!B&C	0.0100	n/a	n/a	-0.0770
A2(LH)	A1&B&!C	0.0100	n/a	n/a	-0.0770
A2(LH)	A1&B&C	0.0100	n/a	n/a	-0.0584
A1(LH)	!A2&!B&!C	0.0100	n/a	n/a	0.0385
A1(LH)	!A2&!B&C	0.0100	n/a	n/a	0.0386
A1(LH)	!A2&B&!C	0.0100	n/a	n/a	0.1203
A1(LH)	A2&!B&!C	0.0100	n/a	n/a	-0.0780
A1(LH)	A2&!B&C	0.0100	n/a	n/a	-0.0778
A1(LH)	A2&B&!C	0.0100	n/a	n/a	-0.0778
A1(LH)	A2&B&C	0.0100	n/a	n/a	-0.0203
C(HL)	!A1&!A2&!B	0.0100	n/a	n/a	0.0636
C(HL)	!A1&!A2&B	0.0100	n/a	n/a	0.0659
C(HL)	!A1&A2&!B	0.0100	n/a	n/a	0.0654
C(HL)	A1&!A2&!B	0.0100	n/a	n/a	0.0654
C(HL)	A1&A2&!B	0.0100	n/a	n/a	0.0653
A2(HL)	!A1&!B&!C	0.0100	n/a	n/a	0.0796
A2(HL)	!A1&!B&C	0.0100	n/a	n/a	0.0797
A2(HL)	!A1&B&!C	0.0100	n/a	n/a	0.0797
A2(HL)	A1&!B&!C	0.0100	n/a	n/a	0.0824
A2(HL)	A1&!B&C	0.0100	n/a	n/a	0.0824
A2(HL)	A1&B&!C	0.0100	n/a	n/a	0.0824
A2(HL)	A1&B&C	0.0100	n/a	n/a	0.0703
B(LH)	!A1&!A2&!C	0.0100	n/a	n/a	-0.0637
B(LH)	!A1&!A2&C	0.0100	n/a	n/a	-0.0635
B(LH)	!A1&A2&!C	0.0100	n/a	n/a	-0.0503
B(LH)	A1&!A2&!C	0.0100	n/a	n/a	-0.0503
B(LH)	A1&A2&!C	0.0100	n/a	n/a	-0.0503
A1(HL)	!A2&!B&!C	0.0100	n/a	n/a	0.0799
A1(HL)	!A2&!B&C	0.0100	n/a	n/a	0.0799
A1(HL)	!A2&B&!C	0.0100	n/a	n/a	0.0799
A1(HL)	A2&!B&!C	0.0100	n/a	n/a	0.0824
A1(HL)	A2&!B&C	0.0100	n/a	n/a	0.0824
A1(HL)	A2&B&!C	0.0100	n/a	n/a	0.0823
A1(HL)	A2&B&C	0.0100	n/a	n/a	0.0586
C(LH)	!A1&!A2&!B	0.0100	n/a	n/a	-0.0637
C(LH)	!A1&!A2&B	0.0100	n/a	n/a	-0.0634
C(LH)	!A1&A2&!B	0.0100	n/a	n/a	-0.0635
C(LH)	A1&!A2&!B	0.0100	n/a	n/a	-0.0637
C(LH)	A1&A2&!B	0.0100	n/a	n/a	-0.0637

LEAKAGE POWER

When Condition	Power (nW)
!A1&!A2&!B&!C	0.1508
!A1&!A2&!B&C	0.1508
!A1&!A2&B&!C	0.1509
!A1&!A2&B&C	0.1518
!A1&A2&!B&!C	0.2717
!A1&A2&!B&C	0.2720
!A1&A2&B&!C	0.3501
A1&!A2&!B&!C	0.2717
A1&!A2&!B&C	0.2721
A1&!A2&B&!C	0.3501
A1&A2&!B&!C	0.2723
A1&A2&!B&C	0.2727
A1&A2&B&!C	0.3508
!A1&A2&B&C	0.2796
A1&!A2&B&C	0.2082
A1&A2&B&C	0.2082

gf180mcu_fd_sc_mcu7t5v0__oai211_4

gf180mcu_fd_sc_mcu7t5v0__oai211_4 symbol

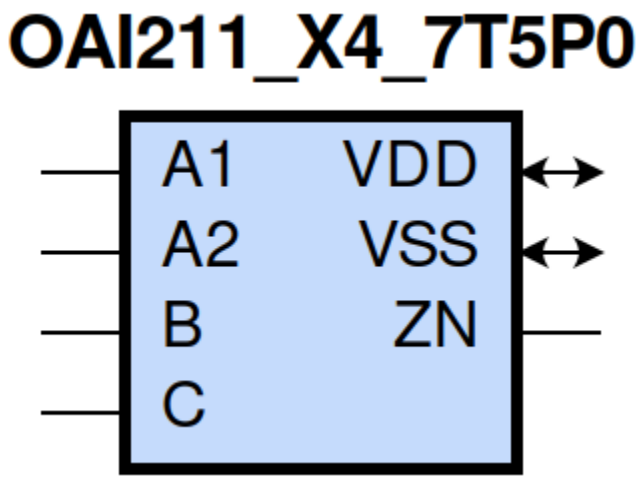

gf180mcu_fd_sc_mcu7t5v0__oai211_4 schematic

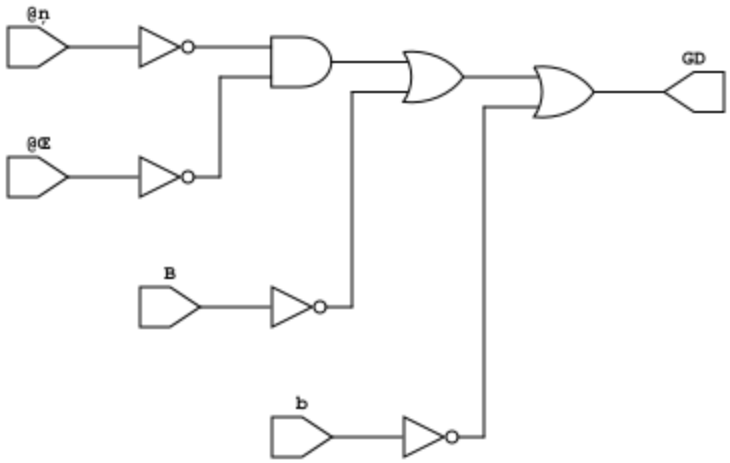

gf180mcu_fd_sc_mcu7t5v0__oai211_4 layout

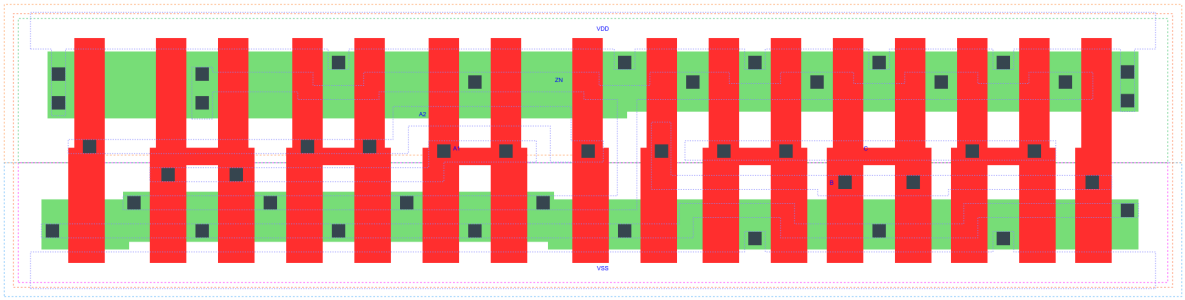

OAI211_X4 is a 2-input OR into 3-input NAND, NAND[OR(A1,A2),B,C], 4X drive strength

Attributes

Attribute	Value
area	72.441600 μm^2

OUTPUT FUNCTIONS

Output Pin	Function
ZN	(((!A1)&(!A2))|(!B)|(!C))

TRUTH TABLE FOR ZN

A1	A2	B	C	ZN
0	0	?	?	1
?	?	0	?	1
?	?	?	0	1
1	?	1	1	0
?	1	1	1	0

FUNCTIONAL SCHEMATIC

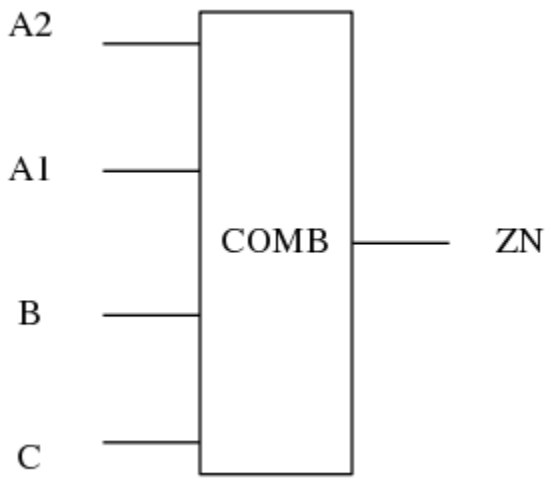

PIN CAPACITANCE (pf)

Pin	Type	Capacitance (pf)
A2	input	0.0186
A1	input	0.0185
B	input	0.0181
C	input	0.0172

DELAY AND OUTPUT TRANSITION TIME corresponding to min slew and load

Input Pin	Output	When Condition	Tin (ns)	Out Load (pf)	Delay (ns)	Tout (ns)
A2(HL)	ZN(LH)	!A1&B&C	0.0100	0.0010	0.1530	0.0953
A2(LH)	ZN(HL)	!A1&B&C	0.0100	0.0010	0.1028	0.0816
A1(HL)	ZN(LH)	!A2&B&C	0.0100	0.0010	0.1246	0.0951
A1(LH)	ZN(HL)	!A2&B&C	0.0100	0.0010	0.0752	0.0575
B(LH)	ZN(HL)	!A1&A2&C	0.0100	0.0010	0.1483	0.0823
B(LH)	ZN(HL)	A1&!A2&C	0.0100	0.0010	0.1173	0.0600
B(LH)	ZN(HL)	A1&A2&C	0.0100	0.0010	0.1040	0.0644
B(HL)	ZN(LH)	!A1&A2&C	0.0100	0.0010	0.1331	0.1171
B(HL)	ZN(LH)	A1&!A2&C	0.0100	0.0010	0.1265	0.0904
B(HL)	ZN(LH)	A1&A2&C	0.0100	0.0010	0.1435	0.1025
C(HL)	ZN(LH)	!A1&A2&B	0.0100	0.0010	0.1487	0.1362
C(HL)	ZN(LH)	A1&!A2&B	0.0100	0.0010	0.1407	0.1065
C(HL)	ZN(LH)	A1&A2&B	0.0100	0.0010	0.1607	0.1198
C(LH)	ZN(HL)	!A1&A2&B	0.0100	0.0010	0.1592	0.0822
C(LH)	ZN(HL)	A1&!A2&B	0.0100	0.0010	0.1283	0.0600
C(LH)	ZN(HL)	A1&A2&B	0.0100	0.0010	0.1149	0.0645

DYNAMIC ENERGY

Input Pin	When Condition	Tin (ns)	Output	Out Load (pf)	Energy (uW/MHz)
C	!A1&A2&B	0.0100	ZN(LH)	0.0010	1.1239
C	A1&!A2&B	0.0100	ZN(LH)	0.0010	1.0149
C	A1&A2&B	0.0100	ZN(LH)	0.0010	1.1039
C	!A1&A2&B	0.0100	ZN(HL)	0.0010	0.1655
C	A1&!A2&B	0.0100	ZN(HL)	0.0010	0.0575
C	A1&A2&B	0.0100	ZN(HL)	0.0010	0.0578
A1	!A2&B&C	0.0100	ZN(LH)	0.0010	0.5484
B	!A1&A2&C	0.0100	ZN(HL)	0.0010	0.1653
B	A1&!A2&C	0.0100	ZN(HL)	0.0010	0.0575
B	A1&A2&C	0.0100	ZN(HL)	0.0010	0.0574
A2	!A1&B&C	0.0100	ZN(LH)	0.0010	0.6572
A1	!A2&B&C	0.0100	ZN(HL)	0.0010	0.0576
B	!A1&A2&C	0.0100	ZN(LH)	0.0010	0.9836
B	A1&!A2&C	0.0100	ZN(LH)	0.0010	0.8750
B	A1&A2&C	0.0100	ZN(LH)	0.0010	0.9662
A2	!A1&B&C	0.0100	ZN(HL)	0.0010	0.1543
B(HL)	!A1&!A2&!C	0.0100	n/a	n/a	0.1963
B(HL)	!A1&!A2&C	0.0100	n/a	n/a	0.1615
B(HL)	!A1&A2&!C	0.0100	n/a	n/a	0.1357
B(HL)	A1&!A2&!C	0.0100	n/a	n/a	0.1364
B(HL)	A1&A2&!C	0.0100	n/a	n/a	0.1360
A2(LH)	!A1&!B&!C	0.0100	n/a	n/a	0.0700
A2(LH)	!A1&!B&C	0.0100	n/a	n/a	0.0702
A2(LH)	!A1&B&!C	0.0100	n/a	n/a	0.2323
A2(LH)	A1&!B&!C	0.0100	n/a	n/a	-0.1542
A2(LH)	A1&!B&C	0.0100	n/a	n/a	-0.1540

continues on next page

Table 72 – continued from previous page

A2(LH)	A1&B&!C	0.0100	n/a	n/a	-0.1540
A2(LH)	A1&B&C	0.0100	n/a	n/a	-0.1170
A1(LH)	!A2&!B&!C	0.0100	n/a	n/a	0.0689
A1(LH)	!A2&!B&C	0.0100	n/a	n/a	0.0690
A1(LH)	!A2&B&!C	0.0100	n/a	n/a	0.2310
A1(LH)	A2&!B&!C	0.0100	n/a	n/a	-0.1560
A1(LH)	A2&!B&C	0.0100	n/a	n/a	-0.1556
A1(LH)	A2&B&!C	0.0100	n/a	n/a	-0.1556
A1(LH)	A2&B&C	0.0100	n/a	n/a	-0.0404
C(HL)	!A1&!A2&!B	0.0100	n/a	n/a	0.1271
C(HL)	!A1&!A2&B	0.0100	n/a	n/a	0.1321
C(HL)	!A1&A2&!B	0.0100	n/a	n/a	0.1311
C(HL)	A1&!A2&!B	0.0100	n/a	n/a	0.1311
C(HL)	A1&A2&!B	0.0100	n/a	n/a	0.1309
A2(HL)	!A1&!B&!C	0.0100	n/a	n/a	0.1589
A2(HL)	!A1&!B&C	0.0100	n/a	n/a	0.1589
A2(HL)	!A1&B&!C	0.0100	n/a	n/a	0.1589
A2(HL)	A1&!B&!C	0.0100	n/a	n/a	0.1648
A2(HL)	A1&!B&C	0.0100	n/a	n/a	0.1649
A2(HL)	A1&B&!C	0.0100	n/a	n/a	0.1647
A2(HL)	A1&B&C	0.0100	n/a	n/a	0.1407
B(LH)	!A1&!A2&!C	0.0100	n/a	n/a	-0.1269
B(LH)	!A1&!A2&C	0.0100	n/a	n/a	-0.1265
B(LH)	!A1&A2&!C	0.0100	n/a	n/a	-0.1013
B(LH)	A1&!A2&!C	0.0100	n/a	n/a	-0.1012
B(LH)	A1&A2&!C	0.0100	n/a	n/a	-0.1013
A1(HL)	!A2&!B&!C	0.0100	n/a	n/a	0.1597
A1(HL)	!A2&!B&C	0.0100	n/a	n/a	0.1597
A1(HL)	!A2&B&!C	0.0100	n/a	n/a	0.1597
A1(HL)	A2&!B&!C	0.0100	n/a	n/a	0.1651
A1(HL)	A2&!B&C	0.0100	n/a	n/a	0.1651
A1(HL)	A2&B&!C	0.0100	n/a	n/a	0.1649
A1(HL)	A2&B&C	0.0100	n/a	n/a	0.1131
C(LH)	!A1&!A2&!B	0.0100	n/a	n/a	-0.1271
C(LH)	!A1&!A2&B	0.0100	n/a	n/a	-0.1267
C(LH)	!A1&A2&!B	0.0100	n/a	n/a	-0.1269
C(LH)	A1&!A2&!B	0.0100	n/a	n/a	-0.1271
C(LH)	A1&A2&!B	0.0100	n/a	n/a	-0.1271

LEAKAGE POWER

When Condition	Power (nW)
!A1&!A2&!B&!C	0.2515
!A1&!A2&!B&C	0.2515
!A1&!A2&B&!C	0.2519
!A1&!A2&B&C	0.2536
!A1&A2&!B&!C	0.4924
!A1&A2&!B&C	0.4930
!A1&A2&B&!C	0.6493
A1&!A2&!B&!C	0.4924
A1&!A2&!B&C	0.4930
A1&!A2&B&!C	0.6493
A1&A2&!B&!C	0.4936
A1&A2&!B&C	0.4943
A1&A2&B&!C	0.6507
!A1&A2&B&C	0.5092
A1&!A2&B&C	0.3665
A1&A2&B&C	0.3665

gf180mcu_fd_sc_mcu7t5v0__oai22_1

gf180mcu_fd_sc_mcu7t5v0__oai22_1 symbol

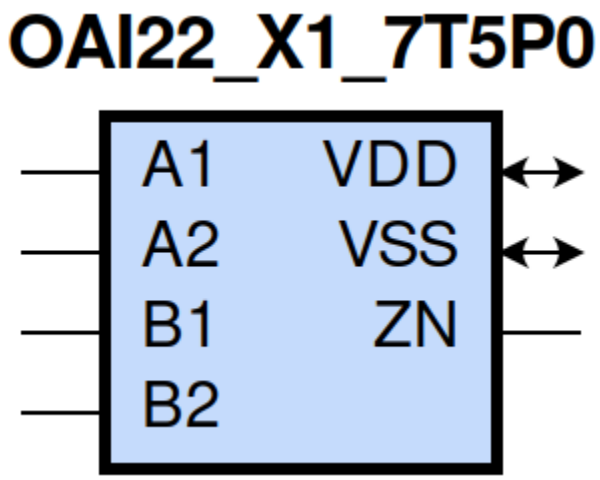

gf180mcu_fd_sc_mcu7t5v0__oai22_1 schematic

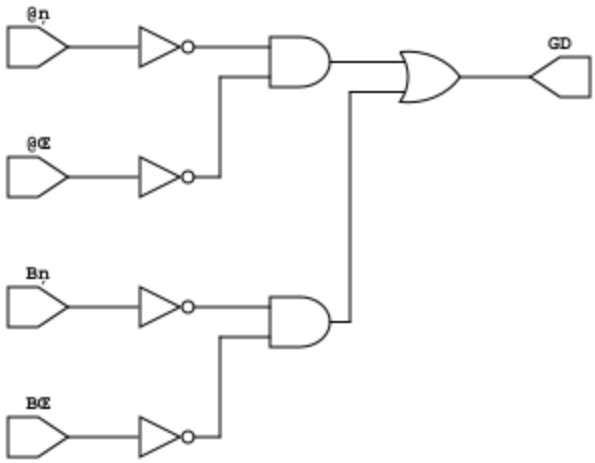

gf180mcu_fd_sc_mcu7t5v0__oai22_1 layout

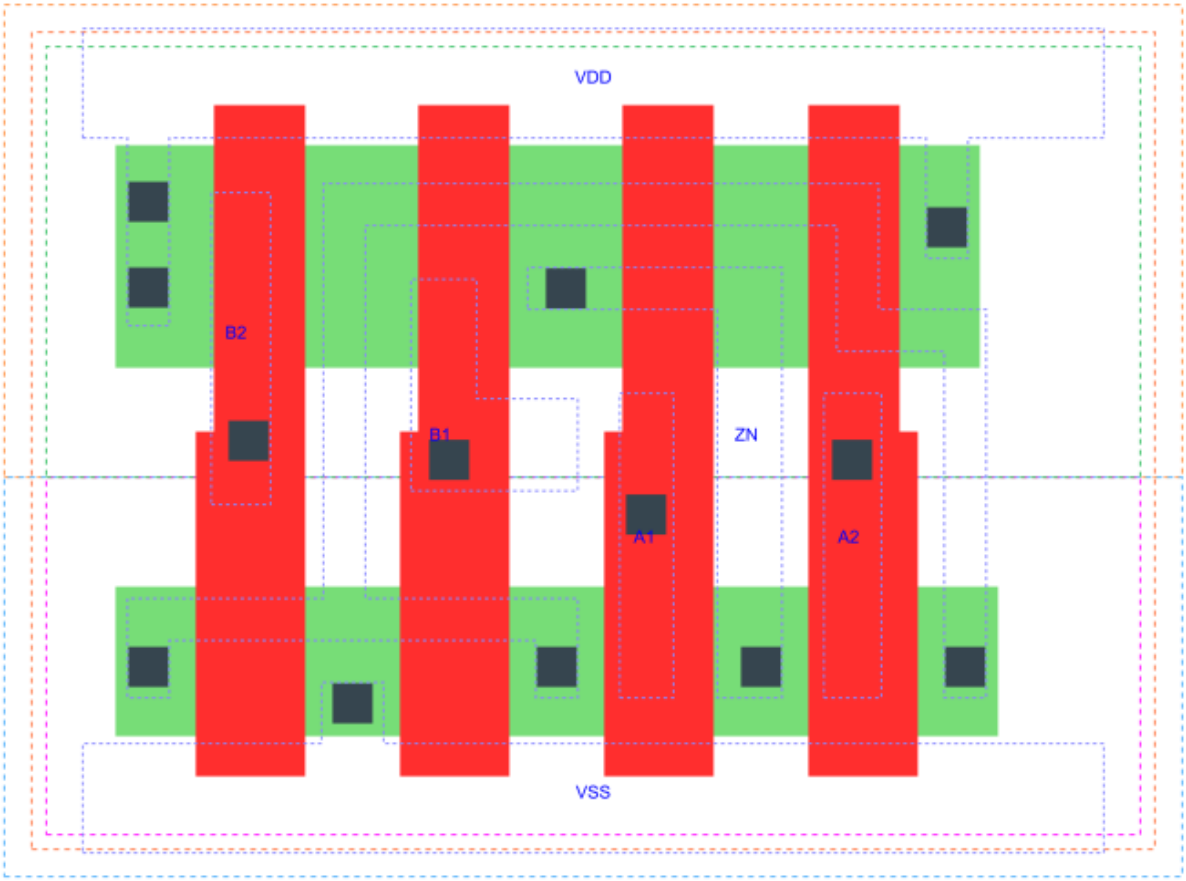

OAI22_X1 is a two 2-input OR into 2-input NAND, NAND[OR(A1,A2),OR(B1,B2)], 1X drive strength

Attributes

Attribute	Value
area	21.952000 μm^2

OUTPUT FUNCTIONS

Output Pin	Function
ZN	(((!A1)&(!A2))|((!B1)&(!B2)))

TRUTH TABLE FOR ZN

A1	A2	B1	B2	ZN
0	0	?	?	1
?	?	0	0	1
1	?	1	?	0
1	?	?	1	0
?	1	1	?	0
?	1	?	1	0

FUNCTIONAL SCHEMATIC

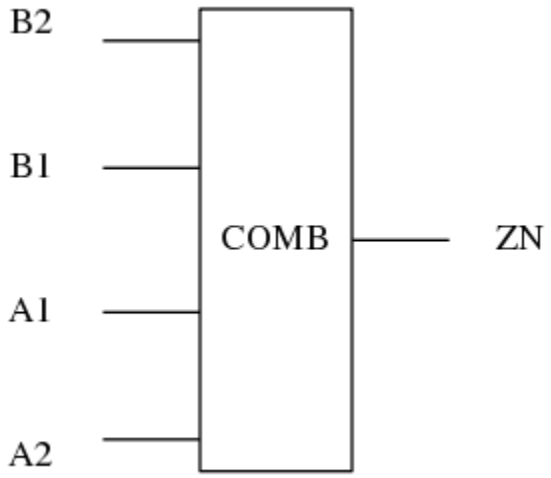

PIN CAPACITANCE (pf)

Pin	Type	Capacitance (pf)
B2	input	0.0047
B1	input	0.0048
A1	input	0.0049
A2	input	0.0048

DELAY AND OUTPUT TRANSITION TIME corresponding to min slew and load

Input Pin	Output	When Condition	Tin (ns)	Out Load (pf)	Delay (ns)	Tout (ns)
B2(HL)	ZN(LH)	!A1&A2&!B1	0.0100	0.0010	0.2486	0.2111
B2(HL)	ZN(LH)	A1&!A2&!B1	0.0100	0.0010	0.2350	0.1654
B2(HL)	ZN(LH)	A1&A2&!B1	0.0100	0.0010	0.2614	0.1841
B2(LH)	ZN(HL)	!A1&A2&!B1	0.0100	0.0010	0.1508	0.0724
B2(LH)	ZN(HL)	A1&!A2&!B1	0.0100	0.0010	0.1254	0.0567
B2(LH)	ZN(HL)	A1&A2&!B1	0.0100	0.0010	0.1047	0.0529
B1(HL)	ZN(LH)	!A1&A2&!B2	0.0100	0.0010	0.2227	0.2113
B1(HL)	ZN(LH)	A1&!A2&!B2	0.0100	0.0010	0.2089	0.1655
B1(HL)	ZN(LH)	A1&A2&!B2	0.0100	0.0010	0.2357	0.1841
B1(LH)	ZN(HL)	!A1&A2&!B2	0.0100	0.0010	0.1270	0.0561
B1(LH)	ZN(HL)	A1&!A2&!B2	0.0100	0.0010	0.1038	0.0407
B1(LH)	ZN(HL)	A1&A2&!B2	0.0100	0.0010	0.0887	0.0404
A1(HL)	ZN(LH)	!A2&!B1&B2	0.0100	0.0010	0.1169	0.1234
A1(HL)	ZN(LH)	!A2&B1&!B2	0.0100	0.0010	0.1082	0.0829
A1(HL)	ZN(LH)	!A2&B1&B2	0.0100	0.0010	0.1074	0.0825
A1(LH)	ZN(HL)	!A2&!B1&B2	0.0100	0.0010	0.0834	0.0556
A1(LH)	ZN(HL)	!A2&B1&!B2	0.0100	0.0010	0.0603	0.0383
A1(LH)	ZN(HL)	!A2&B1&B2	0.0100	0.0010	0.0534	0.0301
A2(HL)	ZN(LH)	!A1&!B1&B2	0.0100	0.0010	0.1417	0.1235
A2(HL)	ZN(LH)	!A1&B1&!B2	0.0100	0.0010	0.1329	0.0828
A2(HL)	ZN(LH)	!A1&B1&B2	0.0100	0.0010	0.1320	0.0828
A2(LH)	ZN(HL)	!A1&!B1&B2	0.0100	0.0010	0.1064	0.0721
A2(LH)	ZN(HL)	!A1&B1&!B2	0.0100	0.0010	0.0804	0.0554
A2(LH)	ZN(HL)	!A1&B1&B2	0.0100	0.0010	0.0688	0.0429

DYNAMIC ENERGY

Input Pin	When Condition	Tin (ns)	Output	Out Load (pf)	Energy (uW/MHz)
A1	!A2&!B1&B2	0.0100	ZN(LH)	0.0010	0.1500
A1	!A2&B1&!B2	0.0100	ZN(LH)	0.0010	0.1199
A1	!A2&B1&B2	0.0100	ZN(LH)	0.0010	0.1193
B2	!A1&A2&!B1	0.0100	ZN(LH)	0.0010	0.3056
B2	A1&!A2&!B1	0.0100	ZN(LH)	0.0010	0.2759
B2	A1&A2&!B1	0.0100	ZN(LH)	0.0010	0.2984

continues on next page

Table 73 – continued from previous page

B1	!A1&A2&!B2	0.0100	ZN(LH)	0.0010	0.2754
B1	A1&!A2&!B2	0.0100	ZN(LH)	0.0010	0.2457
B1	A1&A2&!B2	0.0100	ZN(LH)	0.0010	0.2683
A2	!A1&!B1&B2	0.0100	ZN(LH)	0.0010	0.1800
A2	!A1&B1&!B2	0.0100	ZN(LH)	0.0010	0.1499
A2	!A1&B1&B2	0.0100	ZN(LH)	0.0010	0.1493
B1	!A1&A2&!B2	0.0100	ZN(HL)	0.0010	0.0323
B1	A1&!A2&!B2	0.0100	ZN(HL)	0.0010	0.0070
B1	A1&A2&!B2	0.0100	ZN(HL)	0.0010	0.0071
A1	!A2&!B1&B2	0.0100	ZN(HL)	0.0010	0.0343
A1	!A2&B1&!B2	0.0100	ZN(HL)	0.0010	0.0074
A1	!A2&B1&B2	0.0100	ZN(HL)	0.0010	0.0074
B2	!A1&A2&!B1	0.0100	ZN(HL)	0.0010	0.0555
B2	A1&!A2&!B1	0.0100	ZN(HL)	0.0010	0.0308
B2	A1&A2&!B1	0.0100	ZN(HL)	0.0010	0.0308
A2	!A1&!B1&B2	0.0100	ZN(HL)	0.0010	0.0557
A2	!A1&B1&!B2	0.0100	ZN(HL)	0.0010	0.0292
A2	!A1&B1&B2	0.0100	ZN(HL)	0.0010	0.0292
A1(LH)	!A2&!B1&!B2	0.0100	n/a	n/a	0.0559
A1(LH)	A2&!B1&!B2	0.0100	n/a	n/a	-0.0430
A1(LH)	A2&!B1&B2	0.0100	n/a	n/a	-0.0111
A1(LH)	A2&B1&!B2	0.0100	n/a	n/a	-0.0111
A1(LH)	A2&B1&B2	0.0100	n/a	n/a	-0.0111
B2(LH)	!A1&!A2&!B1	0.0100	n/a	n/a	-0.0393
B2(LH)	!A1&!A2&B1	0.0100	n/a	n/a	-0.0379
B2(LH)	!A1&A2&B1	0.0100	n/a	n/a	-0.0327
B2(LH)	A1&!A2&B1	0.0100	n/a	n/a	-0.0327
B2(LH)	A1&A2&B1	0.0100	n/a	n/a	-0.0327
A2(HL)	!A1&!B1&!B2	0.0100	n/a	n/a	0.0441
A2(HL)	A1&!B1&!B2	0.0100	n/a	n/a	0.0440
A2(HL)	A1&!B1&B2	0.0100	n/a	n/a	0.0393
A2(HL)	A1&B1&!B2	0.0100	n/a	n/a	0.0393
A2(HL)	A1&B1&B2	0.0100	n/a	n/a	0.0393
B1(HL)	!A1&!A2&!B2	0.0100	n/a	n/a	0.0423
B1(HL)	!A1&!A2&B2	0.0100	n/a	n/a	0.0397
B1(HL)	!A1&A2&B2	0.0100	n/a	n/a	0.0282
B1(HL)	A1&!A2&B2	0.0100	n/a	n/a	0.0282
B1(HL)	A1&A2&B2	0.0100	n/a	n/a	0.0282
B2(HL)	!A1&!A2&!B1	0.0100	n/a	n/a	0.0420
B2(HL)	!A1&!A2&B1	0.0100	n/a	n/a	0.0393
B2(HL)	!A1&A2&B1	0.0100	n/a	n/a	0.0393
B2(HL)	A1&!A2&B1	0.0100	n/a	n/a	0.0393
B2(HL)	A1&A2&B1	0.0100	n/a	n/a	0.0393
A1(HL)	!A2&!B1&!B2	0.0100	n/a	n/a	0.0443
A1(HL)	A2&!B1&!B2	0.0100	n/a	n/a	0.0443
A1(HL)	A2&!B1&B2	0.0100	n/a	n/a	0.0264
A1(HL)	A2&B1&!B2	0.0100	n/a	n/a	0.0264
A1(HL)	A2&B1&B2	0.0100	n/a	n/a	0.0264
B1(LH)	!A1&!A2&!B2	0.0100	n/a	n/a	-0.0398
B1(LH)	!A1&!A2&B2	0.0100	n/a	n/a	-0.0385
B1(LH)	!A1&A2&B2	0.0100	n/a	n/a	-0.0112
B1(LH)	A1&!A2&B2	0.0100	n/a	n/a	-0.0112

continues on next page

Table 73 – continued from previous page

B1(LH)	A1&A2&B2	0.0100	n/a	n/a	-0.0112
A2(LH)	!A1&!B1&!B2	0.0100	n/a	n/a	0.0563
A2(LH)	A1&!B1&!B2	0.0100	n/a	n/a	-0.0426
A2(LH)	A1&!B1&B2	0.0100	n/a	n/a	-0.0329
A2(LH)	A1&B1&!B2	0.0100	n/a	n/a	-0.0329
A2(LH)	A1&B1&B2	0.0100	n/a	n/a	-0.0329

LEAKAGE POWER

When Condition	Power (nW)
!A1&!A2&!B1&!B2	0.1004
!A1&!A2&!B1&B2	0.1009
!A1&!A2&B1&!B2	0.1009
!A1&!A2&B1&B2	0.1009
!A1&A2&!B1&!B2	0.1806
A1&!A2&!B1&!B2	0.1806
A1&A2&!B1&!B2	0.1810
!A1&A2&!B1&B2	0.1743
!A1&A2&B1&!B2	0.1386
!A1&A2&B1&B2	0.1386
A1&!A2&!B1&B2	0.1386
A1&!A2&B1&!B2	0.1030
A1&!A2&B1&B2	0.1030
A1&A2&!B1&B2	0.1386
A1&A2&B1&!B2	0.1030
A1&A2&B1&B2	0.1030

gf180mcu_fd_sc_mcu7t5v0__oai22_2

gf180mcu_fd_sc_mcu7t5v0__oai22_2 symbol

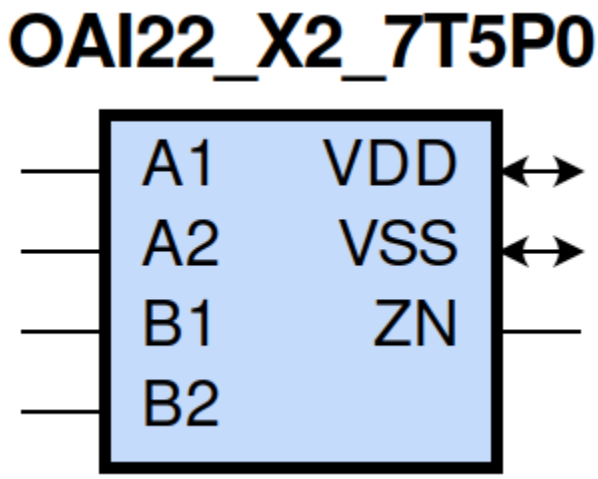

gf180mcu_fd_sc_mcu7t5v0__oai22_2 schematic

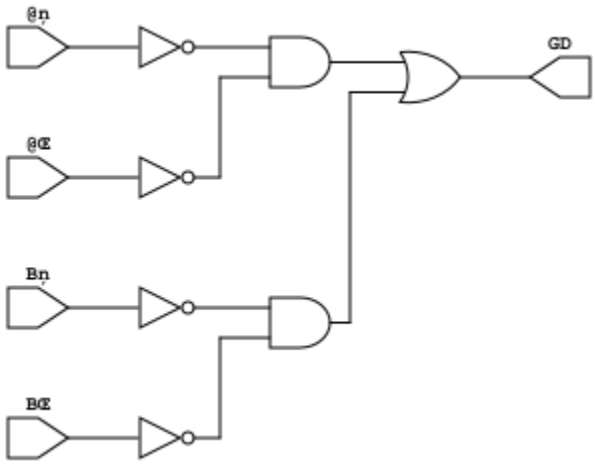

gf180mcu_fd_sc_mcu7t5v0__oai22_2 layout

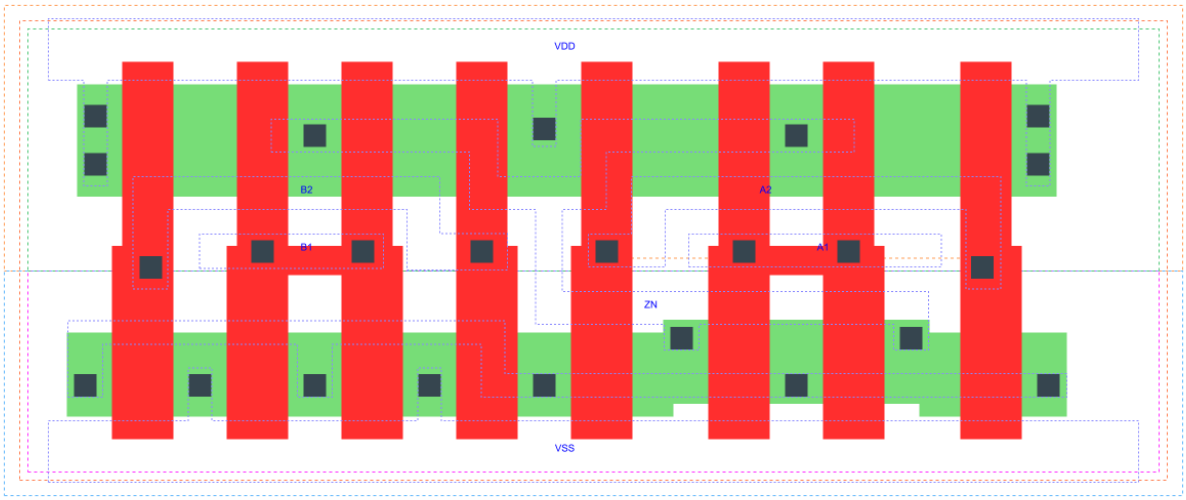

OAI22_X2 is a two 2-input OR into 2-input NAND, NAND[OR(A1,A2),OR(B1,B2)], 2X drive strength

Attributes

Attribute	Value
area	41.708800 μm^2

OUTPUT FUNCTIONS

Output Pin	Function
ZN	(((!A1)&(!A2))|((!B1)&(!B2)))

TRUTH TABLE FOR ZN

A1	A2	B1	B2	ZN
0	0	?	?	1
?	?	0	0	1
1	?	1	?	0
1	?	?	1	0
?	1	1	?	0
?	1	?	1	0

FUNCTIONAL SCHEMATIC

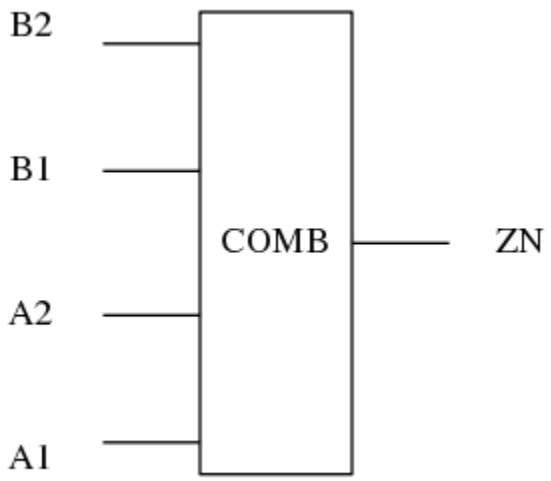

PIN CAPACITANCE (pf)

Pin	Type	Capacitance (pf)
B2	input	0.0093
B1	input	0.0088
A2	input	0.0094
A1	input	0.0091

DELAY AND OUTPUT TRANSITION TIME corresponding to min slew and load

Input Pin	Output	When Condition	Tin (ns)	Out Load (pf)	Delay (ns)	Tout (ns)
B2(HL)	ZN(LH)	!A1&A2&!B1	0.0100	0.0010	0.2482	0.2125
B2(HL)	ZN(LH)	A1&!A2&!B1	0.0100	0.0010	0.2352	0.1626
B2(HL)	ZN(LH)	A1&A2&!B1	0.0100	0.0010	0.2620	0.1826
B2(LH)	ZN(HL)	!A1&A2&!B1	0.0100	0.0010	0.1356	0.0696
B2(LH)	ZN(HL)	A1&!A2&!B1	0.0100	0.0010	0.1114	0.0538
B2(LH)	ZN(HL)	A1&A2&!B1	0.0100	0.0010	0.0929	0.0491
B1(HL)	ZN(LH)	!A1&A2&!B2	0.0100	0.0010	0.2219	0.2124
B1(HL)	ZN(LH)	A1&!A2&!B2	0.0100	0.0010	0.2092	0.1627
B1(HL)	ZN(LH)	A1&A2&!B2	0.0100	0.0010	0.2358	0.1827
B1(LH)	ZN(HL)	!A1&A2&!B2	0.0100	0.0010	0.1145	0.0547
B1(LH)	ZN(HL)	A1&!A2&!B2	0.0100	0.0010	0.0926	0.0393
B1(LH)	ZN(HL)	A1&A2&!B2	0.0100	0.0010	0.0794	0.0379
A2(HL)	ZN(LH)	!A1&!B1&B2	0.0100	0.0010	0.1570	0.1322
A2(HL)	ZN(LH)	!A1&B1&!B2	0.0100	0.0010	0.1478	0.0906
A2(HL)	ZN(LH)	!A1&B1&B2	0.0100	0.0010	0.1467	0.0907
A2(LH)	ZN(HL)	!A1&!B1&B2	0.0100	0.0010	0.1026	0.0697
A2(LH)	ZN(HL)	!A1&B1&!B2	0.0100	0.0010	0.0792	0.0550
A2(LH)	ZN(HL)	!A1&B1&B2	0.0100	0.0010	0.0665	0.0423
A1(HL)	ZN(LH)	!A2&!B1&B2	0.0100	0.0010	0.1276	0.1318
A1(HL)	ZN(LH)	!A2&B1&!B2	0.0100	0.0010	0.1185	0.0903
A1(HL)	ZN(LH)	!A2&B1&B2	0.0100	0.0010	0.1175	0.0903
A1(LH)	ZN(HL)	!A2&!B1&B2	0.0100	0.0010	0.0803	0.0534
A1(LH)	ZN(HL)	!A2&B1&!B2	0.0100	0.0010	0.0597	0.0383
A1(LH)	ZN(HL)	!A2&B1&B2	0.0100	0.0010	0.0520	0.0299

DYNAMIC ENERGY

Input Pin	When Condition	Tin (ns)	Output	Out Load (pf)	Energy (uW/MHz)
A1	!A2&!B1&B2	0.0100	ZN(LH)	0.0010	0.3178
A1	!A2&B1&!B2	0.0100	ZN(LH)	0.0010	0.2642
A1	!A2&B1&B2	0.0100	ZN(LH)	0.0010	0.2624
B2	!A1&A2&!B1	0.0100	ZN(LH)	0.0010	0.5647
B2	A1&!A2&!B1	0.0100	ZN(LH)	0.0010	0.5105
B2	A1&A2&!B1	0.0100	ZN(LH)	0.0010	0.5554
B1	!A1&A2&!B2	0.0100	ZN(LH)	0.0010	0.5109
B1	A1&!A2&!B2	0.0100	ZN(LH)	0.0010	0.4568
B1	A1&A2&!B2	0.0100	ZN(LH)	0.0010	0.5016
A2	!A1&!B1&B2	0.0100	ZN(LH)	0.0010	0.3722
A2	!A1&B1&!B2	0.0100	ZN(LH)	0.0010	0.3186
A2	!A1&B1&B2	0.0100	ZN(LH)	0.0010	0.3170
B1	!A1&A2&!B2	0.0100	ZN(HL)	0.0010	0.0655
B1	A1&!A2&!B2	0.0100	ZN(HL)	0.0010	0.0091

continues on next page

Table 74 – continued from previous page

B1	A1&A2&!B2	0.0100	ZN(HL)	0.0010	0.0093
A1	!A2&!B1&B2	0.0100	ZN(HL)	0.0010	0.0581
A1	!A2&B1&!B2	0.0100	ZN(HL)	0.0010	0.0094
A1	!A2&B1&B2	0.0100	ZN(HL)	0.0010	0.0093
B2	!A1&A2&!B1	0.0100	ZN(HL)	0.0010	0.1073
B2	A1&!A2&!B1	0.0100	ZN(HL)	0.0010	0.0522
B2	A1&A2&!B1	0.0100	ZN(HL)	0.0010	0.0522
A2	!A1&!B1&B2	0.0100	ZN(HL)	0.0010	0.1084
A2	!A1&B1&!B2	0.0100	ZN(HL)	0.0010	0.0602
A2	!A1&B1&B2	0.0100	ZN(HL)	0.0010	0.0602
A1(LH)	!A2&!B1&!B2	0.0100	n/a	n/a	0.0629
A1(LH)	A2&!B1&!B2	0.0100	n/a	n/a	-0.0777
A1(LH)	A2&!B1&B2	0.0100	n/a	n/a	-0.0203
A1(LH)	A2&B1&!B2	0.0100	n/a	n/a	-0.0203
A1(LH)	A2&B1&B2	0.0100	n/a	n/a	-0.0203
B2(LH)	!A1&!A2&!B1	0.0100	n/a	n/a	-0.0703
B2(LH)	!A1&!A2&B1	0.0100	n/a	n/a	-0.0680
B2(LH)	!A1&A2&B1	0.0100	n/a	n/a	-0.0587
B2(LH)	A1&!A2&B1	0.0100	n/a	n/a	-0.0587
B2(LH)	A1&A2&B1	0.0100	n/a	n/a	-0.0587
A2(HL)	!A1&!B1&!B2	0.0100	n/a	n/a	0.0797
A2(HL)	A1&!B1&!B2	0.0100	n/a	n/a	0.0816
A2(HL)	A1&!B1&B2	0.0100	n/a	n/a	0.0704
A2(HL)	A1&B1&!B2	0.0100	n/a	n/a	0.0702
A2(HL)	A1&B1&B2	0.0100	n/a	n/a	0.0703
B1(HL)	!A1&!A2&!B2	0.0100	n/a	n/a	0.0788
B1(HL)	!A1&!A2&B2	0.0100	n/a	n/a	0.0707
B1(HL)	!A1&A2&B2	0.0100	n/a	n/a	0.0512
B1(HL)	A1&!A2&B2	0.0100	n/a	n/a	0.0512
B1(HL)	A1&A2&B2	0.0100	n/a	n/a	0.0512
B2(HL)	!A1&!A2&!B1	0.0100	n/a	n/a	0.0785
B2(HL)	!A1&!A2&B1	0.0100	n/a	n/a	0.0704
B2(HL)	!A1&A2&B1	0.0100	n/a	n/a	0.0703
B2(HL)	A1&!A2&B1	0.0100	n/a	n/a	0.0703
B2(HL)	A1&A2&B1	0.0100	n/a	n/a	0.0703
A1(HL)	!A2&!B1&!B2	0.0100	n/a	n/a	0.0800
A1(HL)	A2&!B1&!B2	0.0100	n/a	n/a	0.0815
A1(HL)	A2&!B1&B2	0.0100	n/a	n/a	0.0586
A1(HL)	A2&B1&!B2	0.0100	n/a	n/a	0.0585
A1(HL)	A2&B1&B2	0.0100	n/a	n/a	0.0585
B1(LH)	!A1&!A2&!B2	0.0100	n/a	n/a	-0.0710
B1(LH)	!A1&!A2&B2	0.0100	n/a	n/a	-0.0688
B1(LH)	!A1&A2&B2	0.0100	n/a	n/a	-0.0201
B1(LH)	A1&!A2&B2	0.0100	n/a	n/a	-0.0201
B1(LH)	A1&A2&B2	0.0100	n/a	n/a	-0.0201
A2(LH)	!A1&!B1&!B2	0.0100	n/a	n/a	0.0636
A2(LH)	A1&!B1&!B2	0.0100	n/a	n/a	-0.0770
A2(LH)	A1&!B1&B2	0.0100	n/a	n/a	-0.0584
A2(LH)	A1&B1&!B2	0.0100	n/a	n/a	-0.0584
A2(LH)	A1&B1&B2	0.0100	n/a	n/a	-0.0584

LEAKAGE POWER

When Condition	Power (nW)
!A1&!A2&!B1&!B2	0.1509
!A1&!A2&!B1&B2	0.1518
!A1&!A2&B1&!B2	0.1518
!A1&!A2&B1&B2	0.1518
!A1&A2&!B1&!B2	0.3095
A1&!A2&!B1&!B2	0.3095
A1&A2&!B1&!B2	0.3103
!A1&A2&!B1&B2	0.2984
!A1&A2&B1&!B2	0.2270
!A1&A2&B1&B2	0.2270
A1&!A2&!B1&B2	0.2270
A1&!A2&B1&!B2	0.1557
A1&!A2&B1&B2	0.1557
A1&A2&!B1&B2	0.2270
A1&A2&B1&!B2	0.1557
A1&A2&B1&B2	0.1557

gf180mcu_fd_sc_mcu7t5v0__oai22_4

gf180mcu_fd_sc_mcu7t5v0__oai22_4 symbol

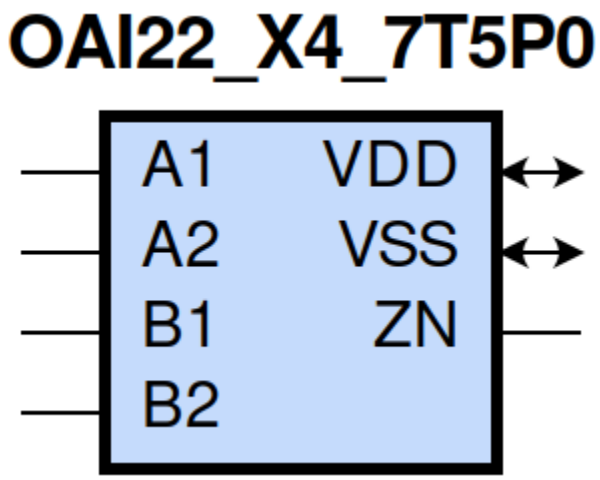

gf180mcu_fd_sc_mcu7t5v0__oai22_4 schematic

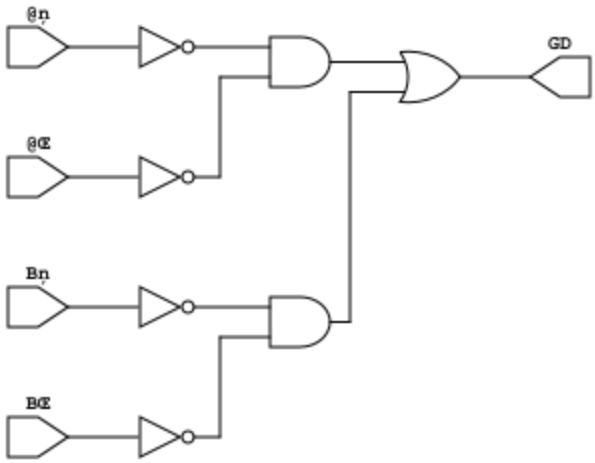

gf180mcu_fd_sc_mcu7t5v0__oai22_4 layout

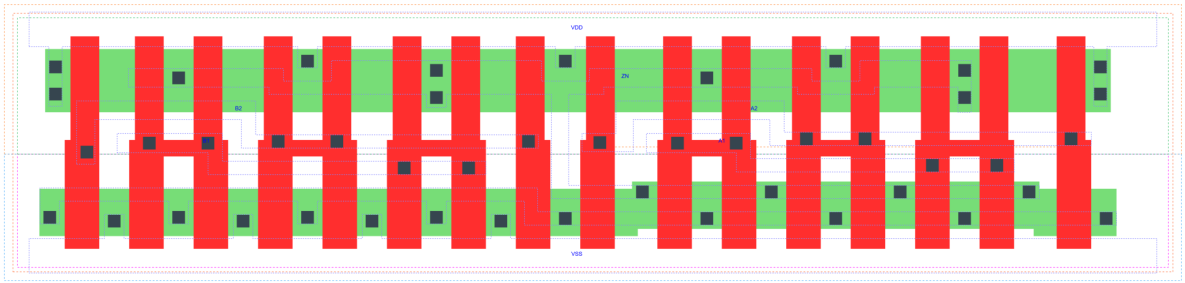

OAI22_X4 is a two 2-input OR into 2-input NAND, NAND[OR(A1,A2),OR(B1,B2)], 4X drive strength

Attributes

Attribute	Value
area	76.832000 μm^2

OUTPUT FUNCTIONS

Output Pin	Function
ZN	(((!A1)&(!A2))|((!B1)&(!B2)))

TRUTH TABLE FOR ZN

A1	A2	B1	B2	ZN
0	0	?	?	1
?	?	0	0	1
1	?	1	?	0
1	?	?	1	0
?	1	1	?	0
?	1	?	1	0

FUNCTIONAL SCHEMATIC

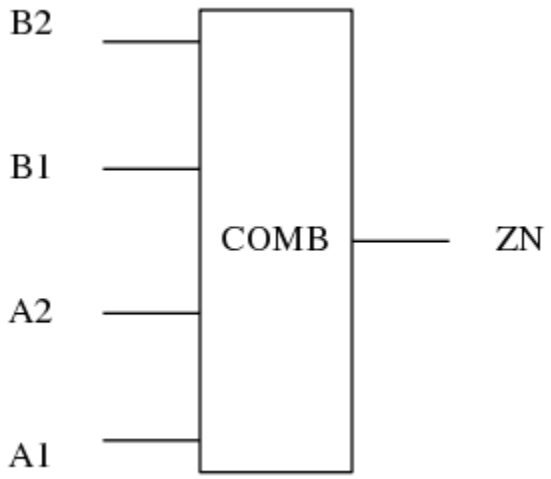

PIN CAPACITANCE (pf)

Pin	Type	Capacitance (pf)
B2	input	0.0183
B1	input	0.0184
A2	input	0.0185
A1	input	0.0187

DELAY AND OUTPUT TRANSITION TIME corresponding to min slew and load

Input Pin	Output	When Condition	Tin (ns)	Out Load (pf)	Delay (ns)	Tout (ns)
B2(HL)	ZN(LH)	!A1&A2&!B1	0.0100	0.0010	0.2447	0.2087
B2(HL)	ZN(LH)	A1&!A2&!B1	0.0100	0.0010	0.2319	0.1598
B2(HL)	ZN(LH)	A1&A2&!B1	0.0100	0.0010	0.2588	0.1797
B2(LH)	ZN(HL)	!A1&A2&!B1	0.0100	0.0010	0.1343	0.0686
B2(LH)	ZN(HL)	A1&!A2&!B1	0.0100	0.0010	0.1102	0.0530
B2(LH)	ZN(HL)	A1&A2&!B1	0.0100	0.0010	0.0920	0.0486
B1(HL)	ZN(LH)	!A1&A2&!B2	0.0100	0.0010	0.2180	0.2086
B1(HL)	ZN(LH)	A1&!A2&!B2	0.0100	0.0010	0.2052	0.1600
B1(HL)	ZN(LH)	A1&A2&!B2	0.0100	0.0010	0.2317	0.1798
B1(LH)	ZN(HL)	!A1&A2&!B2	0.0100	0.0010	0.1127	0.0534
B1(LH)	ZN(HL)	A1&!A2&!B2	0.0100	0.0010	0.0912	0.0384
B1(LH)	ZN(HL)	A1&A2&!B2	0.0100	0.0010	0.0783	0.0371
A2(HL)	ZN(LH)	!A1&!B1&B2	0.0100	0.0010	0.1533	0.1303
A2(HL)	ZN(LH)	!A1&B1&!B2	0.0100	0.0010	0.1443	0.0882
A2(HL)	ZN(LH)	!A1&B1&B2	0.0100	0.0010	0.1433	0.0882
A2(LH)	ZN(HL)	!A1&!B1&B2	0.0100	0.0010	0.1016	0.0688
A2(LH)	ZN(HL)	!A1&B1&!B2	0.0100	0.0010	0.0778	0.0537
A2(LH)	ZN(HL)	!A1&B1&B2	0.0100	0.0010	0.0655	0.0416
A1(HL)	ZN(LH)	!A2&!B1&B2	0.0100	0.0010	0.1249	0.1300
A1(HL)	ZN(LH)	!A2&B1&!B2	0.0100	0.0010	0.1157	0.0879
A1(HL)	ZN(LH)	!A2&B1&B2	0.0100	0.0010	0.1146	0.0879
A1(LH)	ZN(HL)	!A2&!B1&B2	0.0100	0.0010	0.0795	0.0526
A1(LH)	ZN(HL)	!A2&B1&!B2	0.0100	0.0010	0.0587	0.0372
A1(LH)	ZN(HL)	!A2&B1&B2	0.0100	0.0010	0.0511	0.0291

DYNAMIC ENERGY

Input Pin	When Condition	Tin (ns)	Output	Out Load (pf)	Energy (uW/MHz)
A1	!A2&!B1&B2	0.0100	ZN(LH)	0.0010	0.6462
A1	!A2&B1&!B2	0.0100	ZN(LH)	0.0010	0.5384
A1	!A2&B1&B2	0.0100	ZN(LH)	0.0010	0.5348
B2	!A1&A2&!B1	0.0100	ZN(LH)	0.0010	1.1366
B2	A1&!A2&!B1	0.0100	ZN(LH)	0.0010	1.0281
B2	A1&A2&!B1	0.0100	ZN(LH)	0.0010	1.1180
B1	!A1&A2&!B2	0.0100	ZN(LH)	0.0010	1.0281
B1	A1&!A2&!B2	0.0100	ZN(LH)	0.0010	0.9199
B1	A1&A2&!B2	0.0100	ZN(LH)	0.0010	1.0096
A2	!A1&!B1&B2	0.0100	ZN(LH)	0.0010	0.7554
A2	!A1&B1&!B2	0.0100	ZN(LH)	0.0010	0.6473
A2	!A1&B1&B2	0.0100	ZN(LH)	0.0010	0.6442
B1	!A1&A2&!B2	0.0100	ZN(HL)	0.0010	0.1269
B1	A1&!A2&!B2	0.0100	ZN(HL)	0.0010	0.0181
B1	A1&A2&!B2	0.0100	ZN(HL)	0.0010	0.0183
A1	!A2&!B1&B2	0.0100	ZN(HL)	0.0010	0.1196
A1	!A2&B1&!B2	0.0100	ZN(HL)	0.0010	0.0187
A1	!A2&B1&B2	0.0100	ZN(HL)	0.0010	0.0186

continues on next page

Table 75 – continued from previous page

B2	!A1&A2&!B1	0.0100	ZN(HL)	0.0010	0.2145
B2	A1&!A2&!B1	0.0100	ZN(HL)	0.0010	0.1081
B2	A1&A2&!B1	0.0100	ZN(HL)	0.0010	0.1077
A2	!A1&!B1&B2	0.0100	ZN(HL)	0.0010	0.2154
A2	!A1&B1&!B2	0.0100	ZN(HL)	0.0010	0.1162
A2	!A1&B1&B2	0.0100	ZN(HL)	0.0010	0.1158
A1(LH)	!A2&!B1&!B2	0.0100	n/a	n/a	0.1217
A1(LH)	A2&!B1&!B2	0.0100	n/a	n/a	-0.1554
A1(LH)	A2&!B1&B2	0.0100	n/a	n/a	-0.0404
A1(LH)	A2&B1&!B2	0.0100	n/a	n/a	-0.0404
A1(LH)	A2&B1&B2	0.0100	n/a	n/a	-0.0404
B2(LH)	!A1&!A2&!B1	0.0100	n/a	n/a	-0.1404
B2(LH)	!A1&!A2&B1	0.0100	n/a	n/a	-0.1360
B2(LH)	!A1&A2&B1	0.0100	n/a	n/a	-0.1171
B2(LH)	A1&!A2&B1	0.0100	n/a	n/a	-0.1172
B2(LH)	A1&A2&B1	0.0100	n/a	n/a	-0.1171
A2(HL)	!A1&!B1&!B2	0.0100	n/a	n/a	0.1590
A2(HL)	A1&!B1&!B2	0.0100	n/a	n/a	0.1628
A2(HL)	A1&!B1&B2	0.0100	n/a	n/a	0.1407
A2(HL)	A1&B1&!B2	0.0100	n/a	n/a	0.1407
A2(HL)	A1&B1&B2	0.0100	n/a	n/a	0.1407
B1(HL)	!A1&!A2&!B2	0.0100	n/a	n/a	0.1577
B1(HL)	!A1&!A2&B2	0.0100	n/a	n/a	0.1412
B1(HL)	!A1&A2&B2	0.0100	n/a	n/a	0.1057
B1(HL)	A1&!A2&B2	0.0100	n/a	n/a	0.1057
B1(HL)	A1&A2&B2	0.0100	n/a	n/a	0.1057
B2(HL)	!A1&!A2&!B1	0.0100	n/a	n/a	0.1572
B2(HL)	!A1&!A2&B1	0.0100	n/a	n/a	0.1409
B2(HL)	!A1&A2&B1	0.0100	n/a	n/a	0.1409
B2(HL)	A1&!A2&B1	0.0100	n/a	n/a	0.1408
B2(HL)	A1&A2&B1	0.0100	n/a	n/a	0.1408
A1(HL)	!A2&!B1&!B2	0.0100	n/a	n/a	0.1597
A1(HL)	A2&!B1&!B2	0.0100	n/a	n/a	0.1629
A1(HL)	A2&!B1&B2	0.0100	n/a	n/a	0.1131
A1(HL)	A2&B1&!B2	0.0100	n/a	n/a	0.1131
A1(HL)	A2&B1&B2	0.0100	n/a	n/a	0.1131
B1(LH)	!A1&!A2&!B2	0.0100	n/a	n/a	-0.1416
B1(LH)	!A1&!A2&B2	0.0100	n/a	n/a	-0.1375
B1(LH)	!A1&A2&B2	0.0100	n/a	n/a	-0.0401
B1(LH)	A1&!A2&B2	0.0100	n/a	n/a	-0.0401
B1(LH)	A1&A2&B2	0.0100	n/a	n/a	-0.0401
A2(LH)	!A1&!B1&!B2	0.0100	n/a	n/a	0.1229
A2(LH)	A1&!B1&!B2	0.0100	n/a	n/a	-0.1540
A2(LH)	A1&!B1&B2	0.0100	n/a	n/a	-0.1170
A2(LH)	A1&B1&!B2	0.0100	n/a	n/a	-0.1170
A2(LH)	A1&B1&B2	0.0100	n/a	n/a	-0.1169

LEAKAGE POWER

When Condition	Power (nW)
!A1&!A2&!B1&!B2	0.2518
!A1&!A2&!B1&B2	0.2536
!A1&!A2&B1&!B2	0.2536
!A1&!A2&B1&B2	0.2536
!A1&A2&!B1&!B2	0.5716
A1&!A2&!B1&!B2	0.5716
A1&A2&!B1&!B2	0.5731
!A1&A2&!B1&B2	0.5468
!A1&A2&B1&!B2	0.4041
!A1&A2&B1&B2	0.4041
A1&!A2&!B1&B2	0.4041
A1&!A2&B1&!B2	0.2613
A1&!A2&B1&B2	0.2614
A1&A2&!B1&B2	0.4041
A1&A2&B1&!B2	0.2614
A1&A2&B1&B2	0.2614

gf180mcu_fd_sc_mcu7t5v0__oai221_1

gf180mcu_fd_sc_mcu7t5v0__oai221_1 symbol

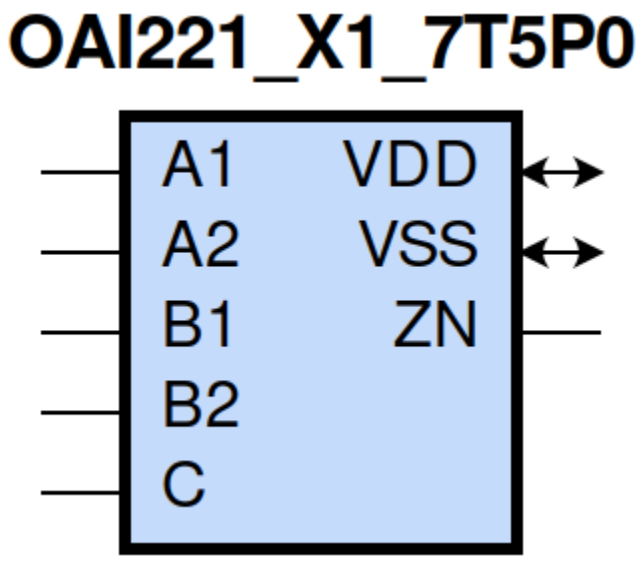

gf180mcu_fd_sc_mcu7t5v0__oai221_1 schematic

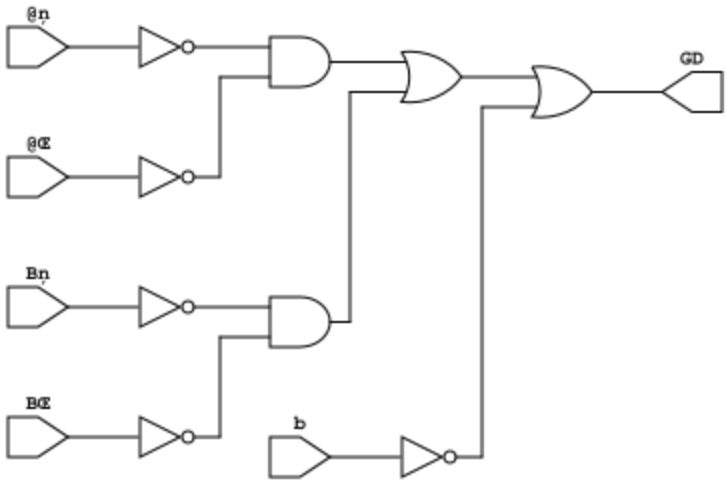

gf180mcu_fd_sc_mcu7t5v0__oai221_1 layout

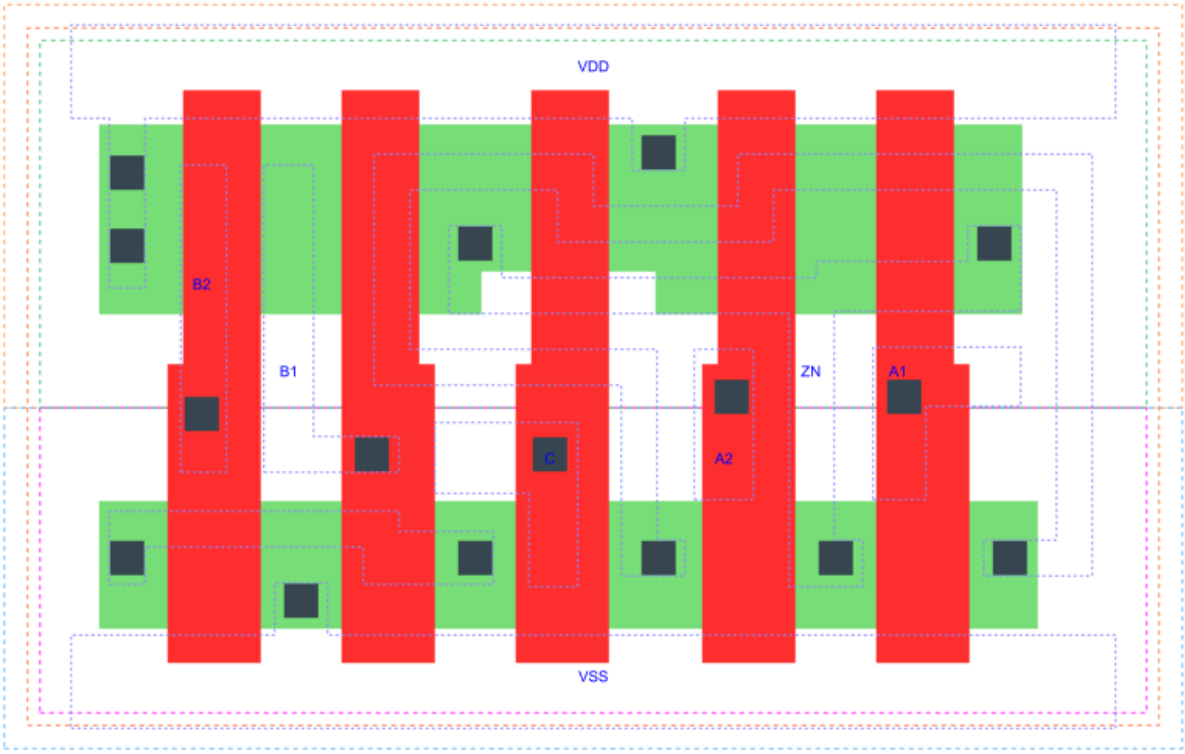

OAI221_X1 is a two 2-input OR into 3-input NAND, NAND[OR(A1,A2),OR(B1,B2),C], 1X drive strength

Attributes

Attribute	Value
area	26.342400 μm^2

OUTPUT FUNCTIONS

Output Pin	Function
ZN	(((!A1)&(!A2))|((!B1)&(!B2))|(!C))

TRUTH TABLE FOR ZN

A1	A2	B1	B2	C	ZN
0	0	?	?	?	1
?	?	0	0	?	1
?	?	?	?	0	1
1	?	1	?	1	0
1	?	?	1	1	0
?	1	1	?	1	0
?	1	?	1	1	0

FUNCTIONAL SCHEMATIC

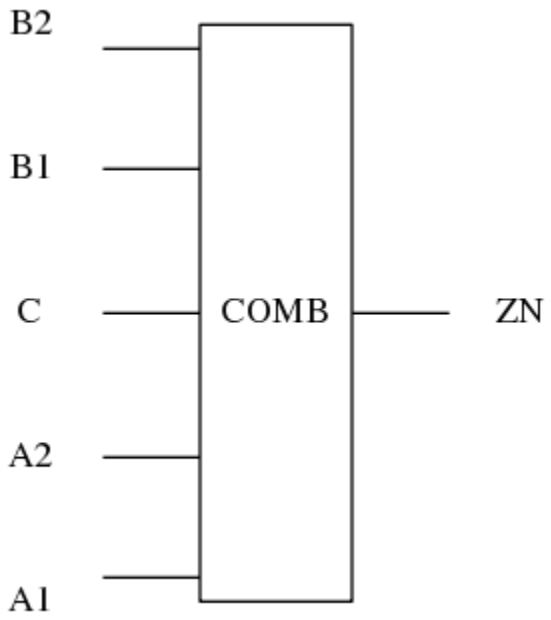

PIN CAPACITANCE (pf)

Pin	Type	Capacitance (pf)
B2	input	0.0047
B1	input	0.0051
C	input	0.0044
A2	input	0.0047
A1	input	0.0049

DELAY AND OUTPUT TRANSITION TIME corresponding to min slew and load

Input Pin	Output	When Condition	Tin (ns)	Out Load (pf)	Delay (ns)	Tout (ns)
B2(HL)	ZN(LH)	!A1&A2&!B1&C	0.0100	0.0010	0.3236	0.2788
B2(HL)	ZN(LH)	A1&!A2&!B1&C	0.0100	0.0010	0.3074	0.2310
B2(HL)	ZN(LH)	A1&A2&!B1&C	0.0100	0.0010	0.3384	0.2513
B2(LH)	ZN(HL)	!A1&A2&!B1&C	0.0100	0.0010	0.2415	0.1226
B2(LH)	ZN(HL)	A1&!A2&!B1&C	0.0100	0.0010	0.2070	0.1006
B2(LH)	ZN(HL)	A1&A2&!B1&C	0.0100	0.0010	0.1817	0.1020
B1(HL)	ZN(LH)	!A1&A2&!B2&C	0.0100	0.0010	0.2995	0.2788
B1(HL)	ZN(LH)	A1&!A2&!B2&C	0.0100	0.0010	0.2832	0.2306
B1(HL)	ZN(LH)	A1&A2&!B2&C	0.0100	0.0010	0.3143	0.2515
B1(LH)	ZN(HL)	!A1&A2&!B2&C	0.0100	0.0010	0.2102	0.1003

continues on next page

Table 76 – continued from previous page

B1(LH)	ZN(HL)	A1&!A2&!B2&C	0.0100	0.0010	0.1768	0.0774
B1(LH)	ZN(HL)	A1&A2&!B2&C	0.0100	0.0010	0.1570	0.0826
C(HL)	ZN(LH)	!A1&A2&!B1&B2	0.0100	0.0010	0.1837	0.1875
C(HL)	ZN(LH)	!A1&A2&B1&!B2	0.0100	0.0010	0.1741	0.1554
C(HL)	ZN(LH)	!A1&A2&B1&B2	0.0100	0.0010	0.1731	0.1552
C(HL)	ZN(LH)	A1&!A2&!B1&B2	0.0100	0.0010	0.1742	0.1552
C(HL)	ZN(LH)	A1&!A2&B1&!B2	0.0100	0.0010	0.1656	0.1243
C(HL)	ZN(LH)	A1&!A2&B1&B2	0.0100	0.0010	0.1647	0.1242
C(HL)	ZN(LH)	A1&A2&!B1&B2	0.0100	0.0010	0.1931	0.1680
C(HL)	ZN(LH)	A1&A2&B1&!B2	0.0100	0.0010	0.1851	0.1378
C(HL)	ZN(LH)	A1&A2&B1&B2	0.0100	0.0010	0.1840	0.1378
C(LH)	ZN(HL)	!A1&A2&!B1&B2	0.0100	0.0010	0.2156	0.1228
C(LH)	ZN(HL)	!A1&A2&B1&!B2	0.0100	0.0010	0.1808	0.1003
C(LH)	ZN(HL)	!A1&A2&B1&B2	0.0100	0.0010	0.1570	0.0824
C(LH)	ZN(HL)	A1&!A2&!B1&B2	0.0100	0.0010	0.1812	0.1005
C(LH)	ZN(HL)	A1&!A2&B1&!B2	0.0100	0.0010	0.1476	0.0777
C(LH)	ZN(HL)	A1&!A2&B1&B2	0.0100	0.0010	0.1293	0.0634
C(LH)	ZN(HL)	A1&A2&!B1&B2	0.0100	0.0010	0.1560	0.1021
C(LH)	ZN(HL)	A1&A2&B1&!B2	0.0100	0.0010	0.1286	0.0825
C(LH)	ZN(HL)	A1&A2&B1&B2	0.0100	0.0010	0.1107	0.0631
A2(HL)	ZN(LH)	!A1&!B1&B2&C	0.0100	0.0010	0.1714	0.1487
A2(HL)	ZN(LH)	!A1&B1&!B2&C	0.0100	0.0010	0.1619	0.1082
A2(HL)	ZN(LH)	!A1&B1&B2&C	0.0100	0.0010	0.1618	0.1082
A2(LH)	ZN(HL)	!A1&!B1&B2&C	0.0100	0.0010	0.1517	0.1215
A2(LH)	ZN(HL)	!A1&B1&!B2&C	0.0100	0.0010	0.1171	0.0973
A2(LH)	ZN(HL)	!A1&B1&B2&C	0.0100	0.0010	0.1078	0.0813
A1(HL)	ZN(LH)	!A2&!B1&B2&C	0.0100	0.0010	0.1469	0.1485
A1(HL)	ZN(LH)	!A2&B1&!B2&C	0.0100	0.0010	0.1374	0.1080
A1(HL)	ZN(LH)	!A2&B1&B2&C	0.0100	0.0010	0.1373	0.1080
A1(LH)	ZN(HL)	!A2&!B1&B2&C	0.0100	0.0010	0.1207	0.0978
A1(LH)	ZN(HL)	!A2&B1&!B2&C	0.0100	0.0010	0.0886	0.0720
A1(LH)	ZN(HL)	!A2&B1&B2&C	0.0100	0.0010	0.0834	0.0608

DYNAMIC ENERGY

Input Pin	When Condition	Tin (ns)	Output	Out Load (pf)	Energy (uW/MHz)
C	!A1&A2&!B1&B2	0.0100	ZN(LH)	0.0010	0.3105
C	!A1&A2&B1&!B2	0.0100	ZN(LH)	0.0010	0.2808
C	!A1&A2&B1&B2	0.0100	ZN(LH)	0.0010	0.2797
C	A1&!A2&!B1&B2	0.0100	ZN(LH)	0.0010	0.2808
C	A1&!A2&B1&!B2	0.0100	ZN(LH)	0.0010	0.2510
C	A1&!A2&B1&B2	0.0100	ZN(LH)	0.0010	0.2500
C	A1&A2&!B1&B2	0.0100	ZN(LH)	0.0010	0.3034
C	A1&A2&B1&!B2	0.0100	ZN(LH)	0.0010	0.2736
C	A1&A2&B1&B2	0.0100	ZN(LH)	0.0010	0.2723
C	!A1&A2&!B1&B2	0.0100	ZN(HL)	0.0010	0.0819
C	!A1&A2&B1&!B2	0.0100	ZN(HL)	0.0010	0.0573

continues on next page

Table 77 – continued from previous page

C	!A1&A2&B1&B2	0.0100	ZN(HL)	0.0010	0.0573
C	A1&!A2&!B1&B2	0.0100	ZN(HL)	0.0010	0.0574
C	A1&!A2&B1&!B2	0.0100	ZN(HL)	0.0010	0.0325
C	A1&!A2&B1&B2	0.0100	ZN(HL)	0.0010	0.0326
C	A1&A2&!B1&B2	0.0100	ZN(HL)	0.0010	0.0573
C	A1&A2&B1&!B2	0.0100	ZN(HL)	0.0010	0.0326
C	A1&A2&B1&B2	0.0100	ZN(HL)	0.0010	0.0325
A1	!A2&!B1&B2&C	0.0100	ZN(LH)	0.0010	0.1724
A1	!A2&B1&!B2&C	0.0100	ZN(LH)	0.0010	0.1426
A1	!A2&B1&B2&C	0.0100	ZN(LH)	0.0010	0.1426
B2	!A1&A2&!B1&C	0.0100	ZN(LH)	0.0010	0.3894
B2	A1&!A2&!B1&C	0.0100	ZN(LH)	0.0010	0.3596
B2	A1&A2&!B1&C	0.0100	ZN(LH)	0.0010	0.3817
B1	!A1&A2&!B2&C	0.0100	ZN(LH)	0.0010	0.3595
B1	A1&!A2&!B2&C	0.0100	ZN(LH)	0.0010	0.3300
B1	A1&A2&!B2&C	0.0100	ZN(LH)	0.0010	0.3522
A2	!A1&!B1&B2&C	0.0100	ZN(LH)	0.0010	0.2023
A2	!A1&B1&!B2&C	0.0100	ZN(LH)	0.0010	0.1726
A2	!A1&B1&B2&C	0.0100	ZN(LH)	0.0010	0.1725
B1	!A1&A2&!B2&C	0.0100	ZN(HL)	0.0010	0.0546
B1	A1&!A2&!B2&C	0.0100	ZN(HL)	0.0010	0.0297
B1	A1&A2&!B2&C	0.0100	ZN(HL)	0.0010	0.0298
A1	!A2&!B1&B2&C	0.0100	ZN(HL)	0.0010	0.0549
A1	!A2&B1&!B2&C	0.0100	ZN(HL)	0.0010	0.0299
A1	!A2&B1&B2&C	0.0100	ZN(HL)	0.0010	0.0299
B2	!A1&A2&!B1&C	0.0100	ZN(HL)	0.0010	0.0755
B2	A1&!A2&!B1&C	0.0100	ZN(HL)	0.0010	0.0510
B2	A1&A2&!B1&C	0.0100	ZN(HL)	0.0010	0.0509
A2	!A1&!B1&B2&C	0.0100	ZN(HL)	0.0010	0.0757
A2	!A1&B1&!B2&C	0.0100	ZN(HL)	0.0010	0.0512
A2	!A1&B1&B2&C	0.0100	ZN(HL)	0.0010	0.0511
A1(LH)	!A2&!B1&!B2&!C	0.0100	n/a	n/a	0.0454
A1(LH)	!A2&!B1&!B2&C	0.0100	n/a	n/a	0.1196
A1(LH)	!A2&!B1&B2&!C	0.0100	n/a	n/a	0.0455
A1(LH)	!A2&B1&!B2&!C	0.0100	n/a	n/a	0.0455
A1(LH)	!A2&B1&B2&!C	0.0100	n/a	n/a	0.0455
A1(LH)	A2&!B1&!B2&!C	0.0100	n/a	n/a	-0.0431
A1(LH)	A2&!B1&!B2&C	0.0100	n/a	n/a	-0.0430
A1(LH)	A2&!B1&B2&!C	0.0100	n/a	n/a	-0.0430
A1(LH)	A2&B1&!B2&!C	0.0100	n/a	n/a	-0.0430
A1(LH)	A2&B1&B2&!C	0.0100	n/a	n/a	-0.0430
A1(LH)	A2&!B1&B2&C	0.0100	n/a	n/a	-0.0111
A1(LH)	A2&B1&!B2&C	0.0100	n/a	n/a	-0.0111
A1(LH)	A2&B1&B2&C	0.0100	n/a	n/a	-0.0111
C(HL)	!A1&!A2&!B1&!B2	0.0100	n/a	n/a	0.0408
C(HL)	!A1&!A2&!B1&B2	0.0100	n/a	n/a	0.0373
C(HL)	!A1&!A2&B1&!B2	0.0100	n/a	n/a	0.0373
C(HL)	!A1&!A2&B1&B2	0.0100	n/a	n/a	0.0363
C(HL)	!A1&A2&!B1&!B2	0.0100	n/a	n/a	0.0312
C(HL)	A1&!A2&!B1&!B2	0.0100	n/a	n/a	0.0313
C(HL)	A1&A2&!B1&!B2	0.0100	n/a	n/a	0.0313
B2(LH)	!A1&!A2&!B1&!C	0.0100	n/a	n/a	-0.0393

continues on next page

Table 77 – continued from previous page

B2(LH)	!A1&!A2&!B1&C	0.0100	n/a	n/a	-0.0394
B2(LH)	!A1&!A2&B1&!C	0.0100	n/a	n/a	-0.0380
B2(LH)	!A1&!A2&B1&C	0.0100	n/a	n/a	-0.0380
B2(LH)	!A1&A2&!B1&!C	0.0100	n/a	n/a	-0.0394
B2(LH)	!A1&A2&B1&!C	0.0100	n/a	n/a	-0.0380
B2(LH)	A1&!A2&!B1&!C	0.0100	n/a	n/a	-0.0394
B2(LH)	A1&!A2&B1&!C	0.0100	n/a	n/a	-0.0380
B2(LH)	A1&A2&!B1&!C	0.0100	n/a	n/a	-0.0394
B2(LH)	A1&A2&B1&!C	0.0100	n/a	n/a	-0.0380
B2(LH)	!A1&A2&B1&C	0.0100	n/a	n/a	-0.0328
B2(LH)	A1&!A2&B1&C	0.0100	n/a	n/a	-0.0328
B2(LH)	A1&A2&B1&C	0.0100	n/a	n/a	-0.0328
A2(HL)	!A1&!B1&!B2&!C	0.0100	n/a	n/a	0.0440
A2(HL)	!A1&!B1&!B2&C	0.0100	n/a	n/a	0.0440
A2(HL)	!A1&!B1&B2&!C	0.0100	n/a	n/a	0.0440
A2(HL)	!A1&B1&!B2&!C	0.0100	n/a	n/a	0.0440
A2(HL)	!A1&B1&B2&!C	0.0100	n/a	n/a	0.0440
A2(HL)	A1&!B1&!B2&!C	0.0100	n/a	n/a	0.0441
A2(HL)	A1&!B1&!B2&C	0.0100	n/a	n/a	0.0443
A2(HL)	A1&!B1&B2&!C	0.0100	n/a	n/a	0.0441
A2(HL)	A1&B1&!B2&!C	0.0100	n/a	n/a	0.0441
A2(HL)	A1&B1&B2&!C	0.0100	n/a	n/a	0.0441
A2(HL)	A1&!B1&B2&C	0.0100	n/a	n/a	0.0393
A2(HL)	A1&B1&!B2&C	0.0100	n/a	n/a	0.0393
A2(HL)	A1&B1&B2&C	0.0100	n/a	n/a	0.0393
B1(HL)	!A1&!A2&!B2&!C	0.0100	n/a	n/a	0.0398
B1(HL)	!A1&!A2&!B2&C	0.0100	n/a	n/a	0.0398
B1(HL)	!A1&!A2&B2&!C	0.0100	n/a	n/a	0.0396
B1(HL)	!A1&!A2&B2&C	0.0100	n/a	n/a	0.0397
B1(HL)	!A1&A2&!B2&!C	0.0100	n/a	n/a	0.0398
B1(HL)	!A1&A2&B2&!C	0.0100	n/a	n/a	0.0397
B1(HL)	A1&!A2&!B2&!C	0.0100	n/a	n/a	0.0398
B1(HL)	A1&!A2&B2&!C	0.0100	n/a	n/a	0.0397
B1(HL)	A1&A2&!B2&!C	0.0100	n/a	n/a	0.0398
B1(HL)	A1&A2&B2&!C	0.0100	n/a	n/a	0.0397
B1(HL)	!A1&A2&B2&C	0.0100	n/a	n/a	0.0264
B1(HL)	A1&!A2&B2&C	0.0100	n/a	n/a	0.0264
B1(HL)	A1&A2&B2&C	0.0100	n/a	n/a	0.0264
B2(HL)	!A1&!A2&!B1&!C	0.0100	n/a	n/a	0.0395
B2(HL)	!A1&!A2&!B1&C	0.0100	n/a	n/a	0.0396
B2(HL)	!A1&!A2&B1&!C	0.0100	n/a	n/a	0.0393
B2(HL)	!A1&!A2&B1&C	0.0100	n/a	n/a	0.0393
B2(HL)	!A1&A2&!B1&!C	0.0100	n/a	n/a	0.0395
B2(HL)	!A1&A2&B1&!C	0.0100	n/a	n/a	0.0393
B2(HL)	A1&!A2&!B1&!C	0.0100	n/a	n/a	0.0395
B2(HL)	A1&!A2&B1&!C	0.0100	n/a	n/a	0.0393
B2(HL)	A1&A2&!B1&!C	0.0100	n/a	n/a	0.0395
B2(HL)	A1&A2&B1&!C	0.0100	n/a	n/a	0.0393
B2(HL)	!A1&A2&B1&C	0.0100	n/a	n/a	0.0393
B2(HL)	A1&!A2&B1&C	0.0100	n/a	n/a	0.0393
B2(HL)	A1&A2&B1&C	0.0100	n/a	n/a	0.0393
A1(HL)	!A2&!B1&!B2&!C	0.0100	n/a	n/a	0.0443

continues on next page

Table 77 – continued from previous page

A1(HL)	!A2&!B1&!B2&C	0.0100	n/a	n/a	0.0443
A1(HL)	!A2&!B1&B2&!C	0.0100	n/a	n/a	0.0443
A1(HL)	!A2&B1&!B2&!C	0.0100	n/a	n/a	0.0443
A1(HL)	!A2&B1&B2&!C	0.0100	n/a	n/a	0.0443
A1(HL)	A2&!B1&!B2&!C	0.0100	n/a	n/a	0.0443
A1(HL)	A2&!B1&!B2&C	0.0100	n/a	n/a	0.0445
A1(HL)	A2&!B1&B2&!C	0.0100	n/a	n/a	0.0443
A1(HL)	A2&B1&!B2&!C	0.0100	n/a	n/a	0.0443
A1(HL)	A2&B1&B2&!C	0.0100	n/a	n/a	0.0443
A1(HL)	A2&!B1&B2&C	0.0100	n/a	n/a	0.0264
A1(HL)	A2&B1&!B2&C	0.0100	n/a	n/a	0.0264
A1(HL)	A2&B1&B2&C	0.0100	n/a	n/a	0.0264
B1(LH)	!A1&!A2&!B2&!C	0.0100	n/a	n/a	-0.0397
B1(LH)	!A1&!A2&!B2&C	0.0100	n/a	n/a	-0.0398
B1(LH)	!A1&!A2&B2&!C	0.0100	n/a	n/a	-0.0385
B1(LH)	!A1&!A2&B2&C	0.0100	n/a	n/a	-0.0385
B1(LH)	!A1&A2&!B2&!C	0.0100	n/a	n/a	-0.0397
B1(LH)	!A1&A2&B2&!C	0.0100	n/a	n/a	-0.0385
B1(LH)	A1&!A2&!B2&!C	0.0100	n/a	n/a	-0.0397
B1(LH)	A1&!A2&B2&!C	0.0100	n/a	n/a	-0.0385
B1(LH)	A1&A2&!B2&!C	0.0100	n/a	n/a	-0.0397
B1(LH)	A1&A2&B2&!C	0.0100	n/a	n/a	-0.0385
B1(LH)	!A1&A2&B2&C	0.0100	n/a	n/a	-0.0111
B1(LH)	A1&!A2&B2&C	0.0100	n/a	n/a	-0.0111
B1(LH)	A1&A2&B2&C	0.0100	n/a	n/a	-0.0111
C(LH)	!A1&!A2&!B1&!B2	0.0100	n/a	n/a	-0.0306
C(LH)	!A1&!A2&!B1&B2	0.0100	n/a	n/a	-0.0305
C(LH)	!A1&!A2&B1&!B2	0.0100	n/a	n/a	-0.0305
C(LH)	!A1&!A2&B1&B2	0.0100	n/a	n/a	-0.0306
C(LH)	!A1&A2&!B1&!B2	0.0100	n/a	n/a	0.0075
C(LH)	A1&!A2&!B1&!B2	0.0100	n/a	n/a	0.0074
C(LH)	A1&A2&!B1&!B2	0.0100	n/a	n/a	0.0076
A2(LH)	!A1&!B1&!B2&!C	0.0100	n/a	n/a	0.0459
A2(LH)	!A1&!B1&!B2&C	0.0100	n/a	n/a	0.1200
A2(LH)	!A1&!B1&B2&!C	0.0100	n/a	n/a	0.0460
A2(LH)	!A1&B1&!B2&!C	0.0100	n/a	n/a	0.0460
A2(LH)	!A1&B1&B2&!C	0.0100	n/a	n/a	0.0460
A2(LH)	A1&!B1&!B2&!C	0.0100	n/a	n/a	-0.0425
A2(LH)	A1&!B1&!B2&C	0.0100	n/a	n/a	-0.0425
A2(LH)	A1&!B1&B2&!C	0.0100	n/a	n/a	-0.0425
A2(LH)	A1&B1&!B2&!C	0.0100	n/a	n/a	-0.0425
A2(LH)	A1&B1&B2&!C	0.0100	n/a	n/a	-0.0425
A2(LH)	A1&!B1&B2&C	0.0100	n/a	n/a	-0.0329
A2(LH)	A1&B1&!B2&C	0.0100	n/a	n/a	-0.0329
A2(LH)	A1&B1&B2&C	0.0100	n/a	n/a	-0.0329

LEAKAGE POWER

When Condition	Power (nW)
!A1&!A2&!B1&!B2&!C	0.1004
!A1&!A2&!B1&!B2&C	0.1005
!A1&!A2&!B1&B2&!C	0.1004
!A1&!A2&!B1&B2&C	0.1009
!A1&!A2&B1&!B2&!C	0.1004
!A1&!A2&B1&!B2&C	0.1009
!A1&!A2&B1&B2&!C	0.1004
!A1&!A2&B1&B2&C	0.1009
!A1&A2&!B1&!B2&!C	0.1627
!A1&A2&!B1&!B2&C	0.2210
!A1&A2&!B1&B2&!C	0.1628
!A1&A2&B1&!B2&!C	0.1628
!A1&A2&B1&B2&!C	0.1628
A1&!A2&!B1&!B2&!C	0.1627
A1&!A2&!B1&!B2&C	0.2210
A1&!A2&!B1&B2&!C	0.1628
A1&!A2&B1&!B2&!C	0.1628
A1&!A2&B1&B2&!C	0.1628
A1&A2&!B1&!B2&!C	0.1630
A1&A2&!B1&!B2&C	0.2214
A1&A2&!B1&B2&!C	0.1632
A1&A2&B1&!B2&!C	0.1632
A1&A2&B1&B2&!C	0.1632
!A1&A2&!B1&B2&C	0.2006
!A1&A2&B1&!B2&C	0.1649
!A1&A2&B1&B2&C	0.1649
A1&!A2&!B1&B2&C	0.1649
A1&!A2&B1&!B2&C	0.1293
A1&!A2&B1&B2&C	0.1293
A1&A2&!B1&B2&C	0.1649
A1&A2&B1&!B2&C	0.1293
A1&A2&B1&B2&C	0.1293

gf180mcu_fd_sc_mcu7t5v0__oai221_2

gf180mcu_fd_sc_mcu7t5v0__oai221_2 symbol

OAI221_X2_7T5P0

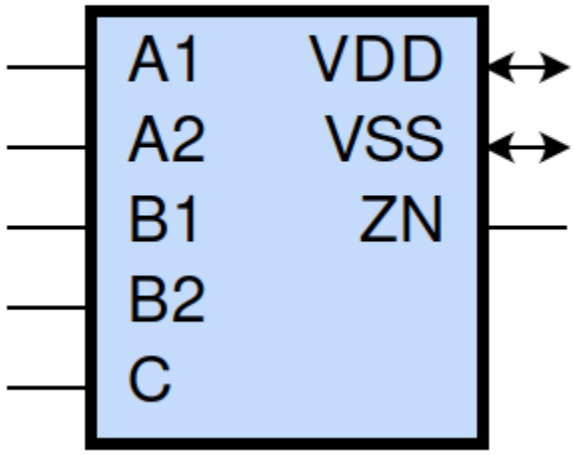

gf180mcu_fd_sc_mcu7t5v0__oai221_2 schematic

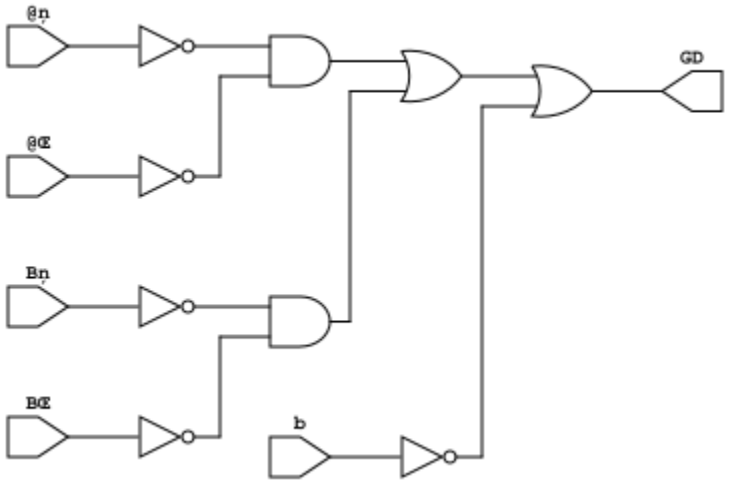

gf180mcu_fd_sc_mcu7t5v0__oai221_2 layout

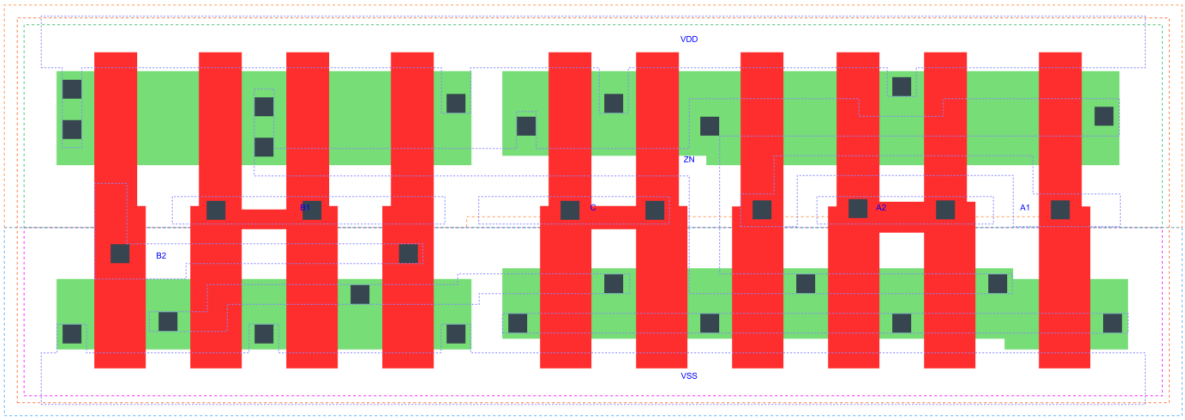

OAI221_X2 is a two 2-input OR into 3-input NAND, NAND[OR(A1,A2),OR(B1,B2),C], 2X drive strength

Attributes

Attribute	Value
area	50.489600 μm^2

OUTPUT FUNCTIONS

Output Pin	Function
ZN	(((!A1)&(!A2))|((!B1)&(!B2))|(!C))

TRUTH TABLE FOR ZN

A1	A2	B1	B2	C	ZN
0	0	?	?	?	1
?	?	0	0	?	1
?	?	?	?	0	1
1	?	1	?	1	0
1	?	?	1	1	0
?	1	1	?	1	0
?	1	?	1	1	0

FUNCTIONAL SCHEMATIC

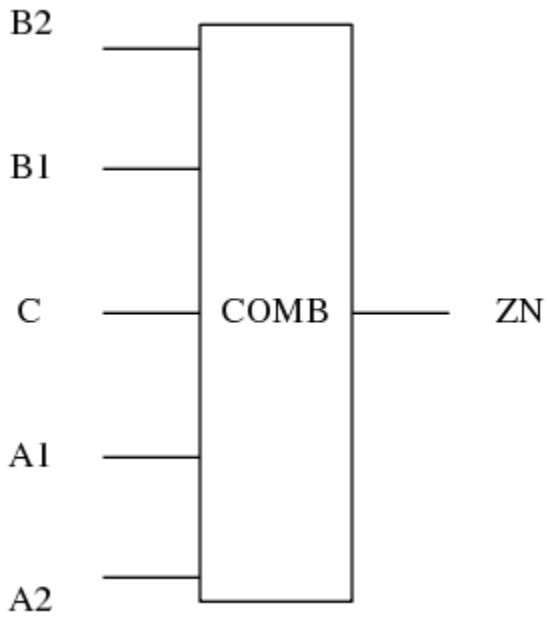

PIN CAPACITANCE (pf)

Pin	Type	Capacitance (pf)
B2	input	0.0093
B1	input	0.0092
C	input	0.0084
A1	input	0.0096
A2	input	0.0087

DELAY AND OUTPUT TRANSITION TIME corresponding to min slew and load

Input Pin	Output	When Condition	Tin (ns)	Out Load (pf)	Delay (ns)	Tout (ns)
B2(HL)	ZN(LH)	!A1&A2&!B1&C	0.0100	0.0010	0.3226	0.2760
B2(HL)	ZN(LH)	A1&!A2&!B1&C	0.0100	0.0010	0.3070	0.2253
B2(HL)	ZN(LH)	A1&A2&!B1&C	0.0100	0.0010	0.3368	0.2466
B2(LH)	ZN(HL)	!A1&A2&!B1&C	0.0100	0.0010	0.2162	0.1155
B2(LH)	ZN(HL)	A1&!A2&!B1&C	0.0100	0.0010	0.1831	0.0936
B2(LH)	ZN(HL)	A1&A2&!B1&C	0.0100	0.0010	0.1617	0.0932
B1(HL)	ZN(LH)	!A1&A2&!B2&C	0.0100	0.0010	0.2952	0.2761
B1(HL)	ZN(LH)	A1&!A2&!B2&C	0.0100	0.0010	0.2796	0.2257
B1(HL)	ZN(LH)	A1&A2&!B2&C	0.0100	0.0010	0.3097	0.2467
B1(LH)	ZN(HL)	!A1&A2&!B2&C	0.0100	0.0010	0.1864	0.0940

continues on next page

Table 79 – continued from previous page

B1(LH)	ZN(HL)	A1&!A2&!B2&C	0.0100	0.0010	0.1551	0.0718
B1(LH)	ZN(HL)	A1&A2&!B2&C	0.0100	0.0010	0.1387	0.0742
C(HL)	ZN(LH)	!A1&A2&!B1&B2	0.0100	0.0010	0.1526	0.1570
C(HL)	ZN(LH)	!A1&A2&B1&!B2	0.0100	0.0010	0.1454	0.1283
C(HL)	ZN(LH)	!A1&A2&B1&B2	0.0100	0.0010	0.1446	0.1284
C(HL)	ZN(LH)	A1&!A2&!B1&B2	0.0100	0.0010	0.1456	0.1284
C(HL)	ZN(LH)	A1&!A2&B1&!B2	0.0100	0.0010	0.1392	0.1019
C(HL)	ZN(LH)	A1&!A2&B1&B2	0.0100	0.0010	0.1379	0.1019
C(HL)	ZN(LH)	A1&A2&!B1&B2	0.0100	0.0010	0.1619	0.1402
C(HL)	ZN(LH)	A1&A2&B1&!B2	0.0100	0.0010	0.1555	0.1138
C(HL)	ZN(LH)	A1&A2&B1&B2	0.0100	0.0010	0.1546	0.1138
C(LH)	ZN(HL)	!A1&A2&!B1&B2	0.0100	0.0010	0.1939	0.1155
C(LH)	ZN(HL)	!A1&A2&B1&!B2	0.0100	0.0010	0.1608	0.0937
C(LH)	ZN(HL)	!A1&A2&B1&B2	0.0100	0.0010	0.1396	0.0772
C(LH)	ZN(HL)	A1&!A2&!B1&B2	0.0100	0.0010	0.1608	0.0938
C(LH)	ZN(HL)	A1&!A2&B1&!B2	0.0100	0.0010	0.1297	0.0716
C(LH)	ZN(HL)	A1&!A2&B1&B2	0.0100	0.0010	0.1134	0.0590
C(LH)	ZN(HL)	A1&A2&!B1&B2	0.0100	0.0010	0.1392	0.0931
C(LH)	ZN(HL)	A1&A2&B1&!B2	0.0100	0.0010	0.1138	0.0741
C(LH)	ZN(HL)	A1&A2&B1&B2	0.0100	0.0010	0.0977	0.0572
A1(HL)	ZN(LH)	!A2&!B1&B2&C	0.0100	0.0010	0.1560	0.1581
A1(HL)	ZN(LH)	!A2&B1&!B2&C	0.0100	0.0010	0.1464	0.1142
A1(HL)	ZN(LH)	!A2&B1&B2&C	0.0100	0.0010	0.1463	0.1141
A1(LH)	ZN(HL)	!A2&!B1&B2&C	0.0100	0.0010	0.1187	0.0927
A1(LH)	ZN(HL)	!A2&B1&!B2&C	0.0100	0.0010	0.0881	0.0696
A1(LH)	ZN(HL)	!A2&B1&B2&C	0.0100	0.0010	0.0816	0.0583
A2(HL)	ZN(LH)	!A1&!B1&B2&C	0.0100	0.0010	0.1837	0.1582
A2(HL)	ZN(LH)	!A1&B1&!B2&C	0.0100	0.0010	0.1740	0.1143
A2(HL)	ZN(LH)	!A1&B1&B2&C	0.0100	0.0010	0.1739	0.1143
A2(LH)	ZN(HL)	!A1&!B1&B2&C	0.0100	0.0010	0.1491	0.1154
A2(LH)	ZN(HL)	!A1&B1&!B2&C	0.0100	0.0010	0.1160	0.0931
A2(LH)	ZN(HL)	!A1&B1&B2&C	0.0100	0.0010	0.1052	0.0775

DYNAMIC ENERGY

Input Pin	When Condition	Tin (ns)	Output	Out Load (pf)	Energy (uW/MHz)
C	!A1&A2&!B1&B2	0.0100	ZN(LH)	0.0010	0.5619
C	!A1&A2&B1&!B2	0.0100	ZN(LH)	0.0010	0.5081
C	!A1&A2&B1&B2	0.0100	ZN(LH)	0.0010	0.5058
C	A1&!A2&!B1&B2	0.0100	ZN(LH)	0.0010	0.5084
C	A1&!A2&B1&!B2	0.0100	ZN(LH)	0.0010	0.4544
C	A1&!A2&B1&B2	0.0100	ZN(LH)	0.0010	0.4525
C	A1&A2&!B1&B2	0.0100	ZN(LH)	0.0010	0.5536
C	A1&A2&B1&!B2	0.0100	ZN(LH)	0.0010	0.5000
C	A1&A2&B1&B2	0.0100	ZN(LH)	0.0010	0.4969
C	!A1&A2&!B1&B2	0.0100	ZN(HL)	0.0010	0.1566
C	!A1&A2&B1&!B2	0.0100	ZN(HL)	0.0010	0.1051

continues on next page

Table 80 – continued from previous page

C	!A1&A2&B1&B2	0.0100	ZN(HL)	0.0010	0.1051
C	A1&!A2&!B1&B2	0.0100	ZN(HL)	0.0010	0.1049
C	A1&!A2&B1&!B2	0.0100	ZN(HL)	0.0010	0.0532
C	A1&!A2&B1&B2	0.0100	ZN(HL)	0.0010	0.0532
C	A1&A2&!B1&B2	0.0100	ZN(HL)	0.0010	0.1050
C	A1&A2&B1&!B2	0.0100	ZN(HL)	0.0010	0.0532
C	A1&A2&B1&B2	0.0100	ZN(HL)	0.0010	0.0531
A1	!A2&!B1&B2&C	0.0100	ZN(LH)	0.0010	0.3504
A1	!A2&B1&!B2&C	0.0100	ZN(LH)	0.0010	0.2966
A1	!A2&B1&B2&C	0.0100	ZN(LH)	0.0010	0.2964
B2	!A1&A2&!B1&C	0.0100	ZN(LH)	0.0010	0.7010
B2	A1&!A2&!B1&C	0.0100	ZN(LH)	0.0010	0.6471
B2	A1&A2&!B1&C	0.0100	ZN(LH)	0.0010	0.6910
B1	!A1&A2&!B2&C	0.0100	ZN(LH)	0.0010	0.6470
B1	A1&!A2&!B2&C	0.0100	ZN(LH)	0.0010	0.5930
B1	A1&A2&!B2&C	0.0100	ZN(LH)	0.0010	0.6371
A2	!A1&!B1&B2&C	0.0100	ZN(LH)	0.0010	0.4047
A2	!A1&B1&!B2&C	0.0100	ZN(LH)	0.0010	0.3508
A2	!A1&B1&B2&C	0.0100	ZN(LH)	0.0010	0.3506
B1	!A1&A2&!B2&C	0.0100	ZN(HL)	0.0010	0.1054
B1	A1&!A2&!B2&C	0.0100	ZN(HL)	0.0010	0.0533
B1	A1&A2&!B2&C	0.0100	ZN(HL)	0.0010	0.0532
A1	!A2&!B1&B2&C	0.0100	ZN(HL)	0.0010	0.1053
A1	!A2&B1&!B2&C	0.0100	ZN(HL)	0.0010	0.0536
A1	!A2&B1&B2&C	0.0100	ZN(HL)	0.0010	0.0535
B2	!A1&A2&!B1&C	0.0100	ZN(HL)	0.0010	0.1503
B2	A1&!A2&!B1&C	0.0100	ZN(HL)	0.0010	0.0987
B2	A1&A2&!B1&C	0.0100	ZN(HL)	0.0010	0.0988
A2	!A1&!B1&B2&C	0.0100	ZN(HL)	0.0010	0.1509
A2	!A1&B1&!B2&C	0.0100	ZN(HL)	0.0010	0.0996
A2	!A1&B1&B2&C	0.0100	ZN(HL)	0.0010	0.0995
A1(LH)	!A2&!B1&!B2&!C	0.0100	n/a	n/a	0.0316
A1(LH)	!A2&!B1&!B2&C	0.0100	n/a	n/a	0.1708
A1(LH)	!A2&!B1&B2&!C	0.0100	n/a	n/a	0.0316
A1(LH)	!A2&B1&!B2&!C	0.0100	n/a	n/a	0.0316
A1(LH)	!A2&B1&B2&!C	0.0100	n/a	n/a	0.0316
A1(LH)	A2&!B1&!B2&!C	0.0100	n/a	n/a	-0.0780
A1(LH)	A2&!B1&!B2&C	0.0100	n/a	n/a	-0.0778
A1(LH)	A2&!B1&B2&!C	0.0100	n/a	n/a	-0.0779
A1(LH)	A2&B1&!B2&!C	0.0100	n/a	n/a	-0.0779
A1(LH)	A2&B1&B2&!C	0.0100	n/a	n/a	-0.0779
A1(LH)	A2&!B1&B2&C	0.0100	n/a	n/a	-0.0202
A1(LH)	A2&B1&!B2&C	0.0100	n/a	n/a	-0.0202
A1(LH)	A2&B1&B2&C	0.0100	n/a	n/a	-0.0202
C(HL)	!A1&!A2&!B1&!B2	0.0100	n/a	n/a	0.0889
C(HL)	!A1&!A2&!B1&B2	0.0100	n/a	n/a	0.0795
C(HL)	!A1&!A2&B1&!B2	0.0100	n/a	n/a	0.0795
C(HL)	!A1&!A2&B1&B2	0.0100	n/a	n/a	0.0774
C(HL)	!A1&A2&!B1&!B2	0.0100	n/a	n/a	0.0682
C(HL)	A1&!A2&!B1&!B2	0.0100	n/a	n/a	0.0682
C(HL)	A1&A2&!B1&!B2	0.0100	n/a	n/a	0.0681
B2(LH)	!A1&!A2&!B1&!C	0.0100	n/a	n/a	-0.0703

continues on next page

Table 80 – continued from previous page

B2(LH)	!A1&!A2&!B1&C	0.0100	n/a	n/a	-0.0704
B2(LH)	!A1&!A2&B1&!C	0.0100	n/a	n/a	-0.0680
B2(LH)	!A1&!A2&B1&C	0.0100	n/a	n/a	-0.0680
B2(LH)	!A1&A2&!B1&!C	0.0100	n/a	n/a	-0.0704
B2(LH)	!A1&A2&B1&!C	0.0100	n/a	n/a	-0.0680
B2(LH)	A1&!A2&!B1&!C	0.0100	n/a	n/a	-0.0703
B2(LH)	A1&!A2&B1&!C	0.0100	n/a	n/a	-0.0680
B2(LH)	A1&A2&!B1&!C	0.0100	n/a	n/a	-0.0704
B2(LH)	A1&A2&B1&!C	0.0100	n/a	n/a	-0.0680
B2(LH)	!A1&A2&B1&C	0.0100	n/a	n/a	-0.0586
B2(LH)	A1&!A2&B1&C	0.0100	n/a	n/a	-0.0586
B2(LH)	A1&A2&B1&C	0.0100	n/a	n/a	-0.0586
A2(HL)	!A1&!B1&!B2&!C	0.0100	n/a	n/a	0.0795
A2(HL)	!A1&!B1&!B2&C	0.0100	n/a	n/a	0.0796
A2(HL)	!A1&!B1&B2&!C	0.0100	n/a	n/a	0.0795
A2(HL)	!A1&B1&!B2&!C	0.0100	n/a	n/a	0.0795
A2(HL)	!A1&B1&B2&!C	0.0100	n/a	n/a	0.0795
A2(HL)	A1&!B1&!B2&!C	0.0100	n/a	n/a	0.0826
A2(HL)	A1&!B1&!B2&C	0.0100	n/a	n/a	0.0827
A2(HL)	A1&!B1&B2&!C	0.0100	n/a	n/a	0.0826
A2(HL)	A1&B1&!B2&!C	0.0100	n/a	n/a	0.0826
A2(HL)	A1&B1&B2&!C	0.0100	n/a	n/a	0.0826
A2(HL)	A1&!B1&B2&C	0.0100	n/a	n/a	0.0702
A2(HL)	A1&B1&!B2&C	0.0100	n/a	n/a	0.0702
A2(HL)	A1&B1&B2&C	0.0100	n/a	n/a	0.0702
B1(HL)	!A1&!A2&!B2&!C	0.0100	n/a	n/a	0.0710
B1(HL)	!A1&!A2&!B2&C	0.0100	n/a	n/a	0.0719
B1(HL)	!A1&!A2&B2&!C	0.0100	n/a	n/a	0.0707
B1(HL)	!A1&!A2&B2&C	0.0100	n/a	n/a	0.0708
B1(HL)	!A1&A2&!B2&!C	0.0100	n/a	n/a	0.0724
B1(HL)	!A1&A2&B2&!C	0.0100	n/a	n/a	0.0708
B1(HL)	A1&!A2&!B2&!C	0.0100	n/a	n/a	0.0724
B1(HL)	A1&!A2&B2&!C	0.0100	n/a	n/a	0.0708
B1(HL)	A1&A2&!B2&!C	0.0100	n/a	n/a	0.0723
B1(HL)	A1&A2&B2&!C	0.0100	n/a	n/a	0.0707
B1(HL)	!A1&A2&B2&C	0.0100	n/a	n/a	0.0546
B1(HL)	A1&!A2&B2&C	0.0100	n/a	n/a	0.0545
B1(HL)	A1&A2&B2&C	0.0100	n/a	n/a	0.0545
B2(HL)	!A1&!A2&!B1&!C	0.0100	n/a	n/a	0.0706
B2(HL)	!A1&!A2&!B1&C	0.0100	n/a	n/a	0.0716
B2(HL)	!A1&!A2&B1&!C	0.0100	n/a	n/a	0.0704
B2(HL)	!A1&!A2&B1&C	0.0100	n/a	n/a	0.0704
B2(HL)	!A1&A2&!B1&!C	0.0100	n/a	n/a	0.0720
B2(HL)	!A1&A2&B1&!C	0.0100	n/a	n/a	0.0704
B2(HL)	A1&!A2&!B1&!C	0.0100	n/a	n/a	0.0720
B2(HL)	A1&!A2&B1&!C	0.0100	n/a	n/a	0.0704
B2(HL)	A1&A2&!B1&!C	0.0100	n/a	n/a	0.0719
B2(HL)	A1&A2&B1&!C	0.0100	n/a	n/a	0.0704
B2(HL)	!A1&A2&B1&C	0.0100	n/a	n/a	0.0704
B2(HL)	A1&!A2&B1&C	0.0100	n/a	n/a	0.0704
B2(HL)	A1&A2&B1&C	0.0100	n/a	n/a	0.0704
A1(HL)	!A2&!B1&!B2&!C	0.0100	n/a	n/a	0.0800

continues on next page

Table 80 – continued from previous page

A1(HL)	!A2&!B1&!B2&C	0.0100	n/a	n/a	0.0800
A1(HL)	!A2&!B1&B2&!C	0.0100	n/a	n/a	0.0800
A1(HL)	!A2&B1&!B2&!C	0.0100	n/a	n/a	0.0800
A1(HL)	!A2&B1&B2&!C	0.0100	n/a	n/a	0.0800
A1(HL)	A2&!B1&!B2&!C	0.0100	n/a	n/a	0.0829
A1(HL)	A2&!B1&!B2&C	0.0100	n/a	n/a	0.0829
A1(HL)	A2&!B1&B2&!C	0.0100	n/a	n/a	0.0830
A1(HL)	A2&B1&!B2&!C	0.0100	n/a	n/a	0.0829
A1(HL)	A2&B1&B2&!C	0.0100	n/a	n/a	0.0829
A1(HL)	A2&!B1&B2&C	0.0100	n/a	n/a	0.0549
A1(HL)	A2&B1&!B2&C	0.0100	n/a	n/a	0.0549
A1(HL)	A2&B1&B2&C	0.0100	n/a	n/a	0.0549
B1(LH)	!A1&!A2&!B2&!C	0.0100	n/a	n/a	-0.0709
B1(LH)	!A1&!A2&!B2&C	0.0100	n/a	n/a	-0.0710
B1(LH)	!A1&!A2&B2&!C	0.0100	n/a	n/a	-0.0689
B1(LH)	!A1&!A2&B2&C	0.0100	n/a	n/a	-0.0687
B1(LH)	!A1&A2&!B2&!C	0.0100	n/a	n/a	-0.0709
B1(LH)	!A1&A2&B2&!C	0.0100	n/a	n/a	-0.0688
B1(LH)	A1&!A2&!B2&!C	0.0100	n/a	n/a	-0.0709
B1(LH)	A1&!A2&B2&!C	0.0100	n/a	n/a	-0.0688
B1(LH)	A1&A2&!B2&!C	0.0100	n/a	n/a	-0.0709
B1(LH)	A1&A2&B2&!C	0.0100	n/a	n/a	-0.0688
B1(LH)	!A1&A2&B2&C	0.0100	n/a	n/a	-0.0202
B1(LH)	A1&!A2&B2&C	0.0100	n/a	n/a	-0.0202
B1(LH)	A1&A2&B2&C	0.0100	n/a	n/a	-0.0202
C(LH)	!A1&!A2&!B1&!B2	0.0100	n/a	n/a	-0.0637
C(LH)	!A1&!A2&!B1&B2	0.0100	n/a	n/a	-0.0635
C(LH)	!A1&!A2&B1&!B2	0.0100	n/a	n/a	-0.0635
C(LH)	!A1&!A2&B1&B2	0.0100	n/a	n/a	-0.0635
C(LH)	!A1&A2&!B1&!B2	0.0100	n/a	n/a	0.0079
C(LH)	A1&!A2&!B1&!B2	0.0100	n/a	n/a	0.0079
C(LH)	A1&A2&!B1&!B2	0.0100	n/a	n/a	0.0080
A2(LH)	!A1&!B1&!B2&!C	0.0100	n/a	n/a	0.0323
A2(LH)	!A1&!B1&!B2&C	0.0100	n/a	n/a	0.1716
A2(LH)	!A1&!B1&B2&!C	0.0100	n/a	n/a	0.0323
A2(LH)	!A1&B1&!B2&!C	0.0100	n/a	n/a	0.0323
A2(LH)	!A1&B1&B2&!C	0.0100	n/a	n/a	0.0323
A2(LH)	A1&!B1&!B2&!C	0.0100	n/a	n/a	-0.0771
A2(LH)	A1&!B1&!B2&C	0.0100	n/a	n/a	-0.0770
A2(LH)	A1&!B1&B2&!C	0.0100	n/a	n/a	-0.0770
A2(LH)	A1&B1&!B2&!C	0.0100	n/a	n/a	-0.0770
A2(LH)	A1&B1&B2&!C	0.0100	n/a	n/a	-0.0770
A2(LH)	A1&!B1&B2&C	0.0100	n/a	n/a	-0.0586
A2(LH)	A1&B1&!B2&C	0.0100	n/a	n/a	-0.0586
A2(LH)	A1&B1&B2&C	0.0100	n/a	n/a	-0.0586

LEAKAGE POWER

When Condition	Power (nW)
!A1&!A2&!B1&!B2&!C	0.1508
!A1&!A2&!B1&!B2&C	0.1510
!A1&!A2&!B1&B2&!C	0.1508
!A1&!A2&!B1&B2&C	0.1518
!A1&!A2&B1&!B2&!C	0.1508
!A1&!A2&B1&!B2&C	0.1518
!A1&!A2&B1&B2&!C	0.1508
!A1&!A2&B1&B2&C	0.1518
!A1&A2&!B1&!B2&!C	0.2701
!A1&A2&!B1&!B2&C	0.3880
!A1&A2&!B1&B2&!C	0.2704
!A1&A2&B1&!B2&!C	0.2704
!A1&A2&B1&B2&!C	0.2704
A1&!A2&!B1&!B2&!C	0.2701
A1&!A2&!B1&!B2&C	0.3880
A1&!A2&!B1&B2&!C	0.2704
A1&!A2&B1&!B2&!C	0.2704
A1&!A2&B1&B2&!C	0.2704
A1&A2&!B1&!B2&!C	0.2707
A1&A2&!B1&!B2&C	0.3886
A1&A2&!B1&B2&!C	0.2710
A1&A2&B1&!B2&!C	0.2710
A1&A2&B1&B2&!C	0.2710
!A1&A2&!B1&B2&C	0.3511
!A1&A2&B1&!B2&C	0.2797
!A1&A2&B1&B2&C	0.2797
A1&!A2&!B1&B2&C	0.2797
A1&!A2&B1&!B2&C	0.2084
A1&!A2&B1&B2&C	0.2084
A1&A2&!B1&B2&C	0.2797
A1&A2&B1&!B2&C	0.2084
A1&A2&B1&B2&C	0.2084

gf180mcu_fd_sc_mcu7t5v0__oai221_4

gf180mcu_fd_sc_mcu7t5v0__oai221_4 symbol

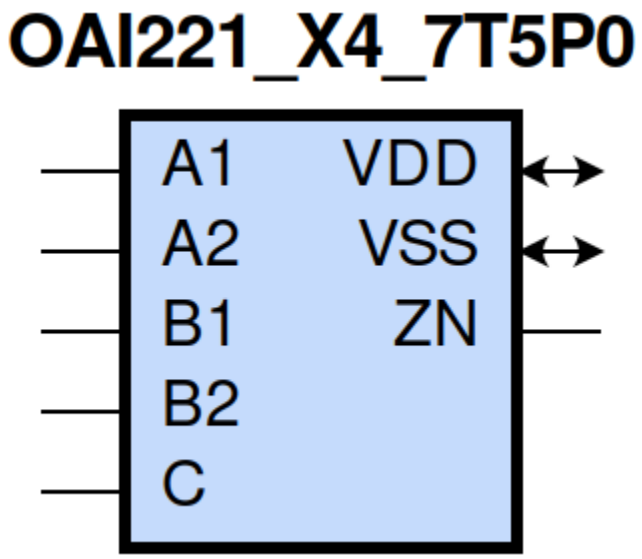

gf180mcu_fd_sc_mcu7t5v0__oai221_4 schematic

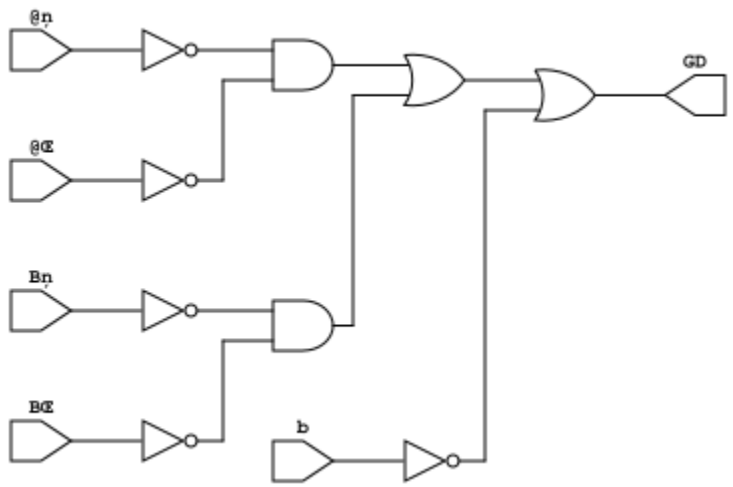

gf180mcu_fd_sc_mcu7t5v0__oai221_4 layout

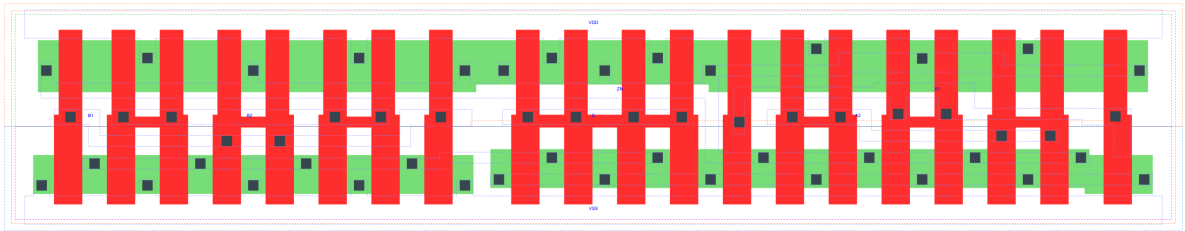

OAI221_X4 is a two 2-input OR into 3-input NAND, NAND[OR(A1,A2),OR(B1,B2),C], 4X drive strength

Attributes

Attribute	Value
area	94.393600 μm^2

OUTPUT FUNCTIONS

Output Pin	Function
ZN	(((!A1)&(!A2))|((!B1)&(!B2))|(!C))

TRUTH TABLE FOR ZN

A1	A2	B1	B2	C	ZN
0	0	?	?	?	1
?	?	0	0	?	1
?	?	?	?	0	1
1	?	1	?	1	0
1	?	?	1	1	0
?	1	1	?	1	0
?	1	?	1	1	0

FUNCTIONAL SCHEMATIC

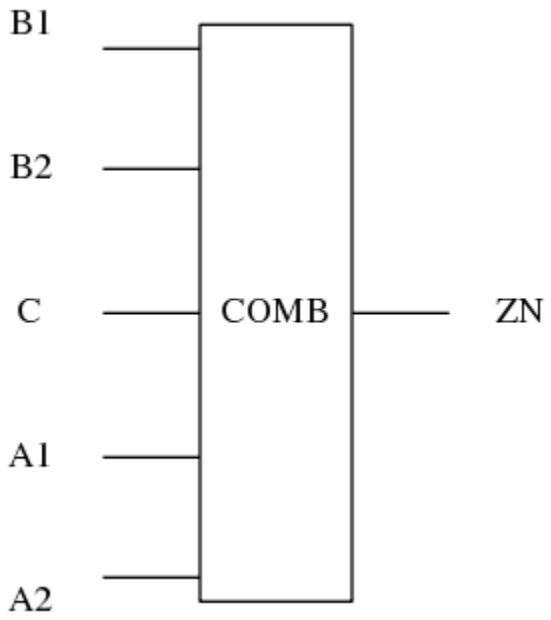

PIN CAPACITANCE (pf)

Pin	Type	Capacitance (pf)
B1	input	0.0191
B2	input	0.0178
C	input	0.0164
A1	input	0.0191
A2	input	0.0180

DELAY AND OUTPUT TRANSITION TIME corresponding to min slew and load

Input Pin	Output	When Condition	Tin (ns)	Out Load (pf)	Delay (ns)	Tout (ns)
B1(HL)	ZN(LH)	!A1&A2&!B2&C	0.0100	0.0010	0.2878	0.2699
B1(HL)	ZN(LH)	A1&!A2&!B2&C	0.0100	0.0010	0.2723	0.2192
B1(HL)	ZN(LH)	A1&A2&!B2&C	0.0100	0.0010	0.3022	0.2405
B1(LH)	ZN(HL)	!A1&A2&!B2&C	0.0100	0.0010	0.1822	0.0913
B1(LH)	ZN(HL)	A1&!A2&!B2&C	0.0100	0.0010	0.1511	0.0691
B1(LH)	ZN(HL)	A1&A2&!B2&C	0.0100	0.0010	0.1354	0.0718
B2(HL)	ZN(LH)	!A1&A2&!B1&C	0.0100	0.0010	0.3149	0.2700
B2(HL)	ZN(LH)	A1&!A2&!B1&C	0.0100	0.0010	0.2994	0.2192
B2(HL)	ZN(LH)	A1&A2&!B1&C	0.0100	0.0010	0.3290	0.2404
B2(LH)	ZN(HL)	!A1&A2&!B1&C	0.0100	0.0010	0.2122	0.1127

continues on next page

Table 82 – continued from previous page

B2(LH)	ZN(HL)	A1&!A2&!B1&C	0.0100	0.0010	0.1791	0.0909
B2(LH)	ZN(HL)	A1&A2&!B1&C	0.0100	0.0010	0.1584	0.0907
C(HL)	ZN(LH)	!A1&A2&!B1&B2	0.0100	0.0010	0.1558	0.1616
C(HL)	ZN(LH)	!A1&A2&B1&!B2	0.0100	0.0010	0.1482	0.1314
C(HL)	ZN(LH)	!A1&A2&B1&B2	0.0100	0.0010	0.1471	0.1314
C(HL)	ZN(LH)	A1&!A2&!B1&B2	0.0100	0.0010	0.1483	0.1311
C(HL)	ZN(LH)	A1&!A2&B1&!B2	0.0100	0.0010	0.1415	0.1034
C(HL)	ZN(LH)	A1&!A2&B1&B2	0.0100	0.0010	0.1403	0.1035
C(HL)	ZN(LH)	A1&A2&!B1&B2	0.0100	0.0010	0.1654	0.1434
C(HL)	ZN(LH)	A1&A2&B1&!B2	0.0100	0.0010	0.1588	0.1159
C(HL)	ZN(LH)	A1&A2&B1&B2	0.0100	0.0010	0.1575	0.1159
C(LH)	ZN(HL)	!A1&A2&!B1&B2	0.0100	0.0010	0.1890	0.1127
C(LH)	ZN(HL)	!A1&A2&B1&!B2	0.0100	0.0010	0.1561	0.0910
C(LH)	ZN(HL)	!A1&A2&B1&B2	0.0100	0.0010	0.1356	0.0754
C(LH)	ZN(HL)	A1&!A2&!B1&B2	0.0100	0.0010	0.1558	0.0908
C(LH)	ZN(HL)	A1&!A2&B1&!B2	0.0100	0.0010	0.1251	0.0693
C(LH)	ZN(HL)	A1&!A2&B1&B2	0.0100	0.0010	0.1096	0.0568
C(LH)	ZN(HL)	A1&A2&!B1&B2	0.0100	0.0010	0.1352	0.0907
C(LH)	ZN(HL)	A1&A2&B1&!B2	0.0100	0.0010	0.1099	0.0718
C(LH)	ZN(HL)	A1&A2&B1&B2	0.0100	0.0010	0.0946	0.0553
A1(HL)	ZN(LH)	!A2&!B1&B2&C	0.0100	0.0010	0.1509	0.1532
A1(HL)	ZN(LH)	!A2&B1&!B2&C	0.0100	0.0010	0.1413	0.1100
A1(HL)	ZN(LH)	!A2&B1&B2&C	0.0100	0.0010	0.1412	0.1099
A1(LH)	ZN(HL)	!A2&!B1&B2&C	0.0100	0.0010	0.1162	0.0901
A1(LH)	ZN(HL)	!A2&B1&!B2&C	0.0100	0.0010	0.0858	0.0669
A1(LH)	ZN(HL)	!A2&B1&B2&C	0.0100	0.0010	0.0795	0.0562
A2(HL)	ZN(LH)	!A1&!B1&B2&C	0.0100	0.0010	0.1785	0.1532
A2(HL)	ZN(LH)	!A1&B1&!B2&C	0.0100	0.0010	0.1690	0.1100
A2(HL)	ZN(LH)	!A1&B1&B2&C	0.0100	0.0010	0.1688	0.1101
A2(LH)	ZN(HL)	!A1&!B1&B2&C	0.0100	0.0010	0.1465	0.1127
A2(LH)	ZN(HL)	!A1&B1&!B2&C	0.0100	0.0010	0.1136	0.0905
A2(LH)	ZN(HL)	!A1&B1&B2&C	0.0100	0.0010	0.1030	0.0753

DYNAMIC ENERGY

Input Pin	When Condition	Tin (ns)	Output	Out Load (pf)	Energy (uW/MHz)
C	!A1&A2&!B1&B2	0.0100	ZN(LH)	0.0010	1.1073
C	!A1&A2&B1&!B2	0.0100	ZN(LH)	0.0010	1.0001
C	!A1&A2&B1&B2	0.0100	ZN(LH)	0.0010	0.9954
C	A1&!A2&!B1&B2	0.0100	ZN(LH)	0.0010	0.9999
C	A1&!A2&B1&!B2	0.0100	ZN(LH)	0.0010	0.8921
C	A1&!A2&B1&B2	0.0100	ZN(LH)	0.0010	0.8877
C	A1&A2&!B1&B2	0.0100	ZN(LH)	0.0010	1.0902
C	A1&A2&B1&!B2	0.0100	ZN(LH)	0.0010	0.9828
C	A1&A2&B1&B2	0.0100	ZN(LH)	0.0010	0.9789
C	!A1&A2&!B1&B2	0.0100	ZN(HL)	0.0010	0.3120
C	!A1&A2&B1&!B2	0.0100	ZN(HL)	0.0010	0.2108

continues on next page

Table 83 – continued from previous page

C	!A1&A2&B1&B2	0.0100	ZN(HL)	0.0010	0.2109
C	A1&!A2&!B1&B2	0.0100	ZN(HL)	0.0010	0.2088
C	A1&!A2&B1&!B2	0.0100	ZN(HL)	0.0010	0.1075
C	A1&!A2&B1&B2	0.0100	ZN(HL)	0.0010	0.1072
C	A1&A2&!B1&B2	0.0100	ZN(HL)	0.0010	0.2090
C	A1&A2&B1&!B2	0.0100	ZN(HL)	0.0010	0.1072
C	A1&A2&B1&B2	0.0100	ZN(HL)	0.0010	0.1071
A1	!A2&!B1&B2&C	0.0100	ZN(LH)	0.0010	0.7023
A1	!A2&B1&!B2&C	0.0100	ZN(LH)	0.0010	0.5949
A1	!A2&B1&B2&C	0.0100	ZN(LH)	0.0010	0.5943
B2	!A1&A2&!B1&C	0.0100	ZN(LH)	0.0010	1.3922
B2	A1&!A2&!B1&C	0.0100	ZN(LH)	0.0010	1.2848
B2	A1&A2&!B1&C	0.0100	ZN(LH)	0.0010	1.3724
B1	!A1&A2&!B2&C	0.0100	ZN(LH)	0.0010	1.2847
B1	A1&!A2&!B2&C	0.0100	ZN(LH)	0.0010	1.1773
B1	A1&A2&!B2&C	0.0100	ZN(LH)	0.0010	1.2651
A2	!A1&!B1&B2&C	0.0100	ZN(LH)	0.0010	0.8110
A2	!A1&B1&!B2&C	0.0100	ZN(LH)	0.0010	0.7035
A2	!A1&B1&B2&C	0.0100	ZN(LH)	0.0010	0.7031
B1	!A1&A2&!B2&C	0.0100	ZN(HL)	0.0010	0.2077
B1	A1&!A2&!B2&C	0.0100	ZN(HL)	0.0010	0.1036
B1	A1&A2&!B2&C	0.0100	ZN(HL)	0.0010	0.1035
A1	!A2&!B1&B2&C	0.0100	ZN(HL)	0.0010	0.2060
A1	!A2&B1&!B2&C	0.0100	ZN(HL)	0.0010	0.1041
A1	!A2&B1&B2&C	0.0100	ZN(HL)	0.0010	0.1040
B2	!A1&A2&!B1&C	0.0100	ZN(HL)	0.0010	0.2955
B2	A1&!A2&!B1&C	0.0100	ZN(HL)	0.0010	0.1927
B2	A1&A2&!B1&C	0.0100	ZN(HL)	0.0010	0.1927
A2	!A1&!B1&B2&C	0.0100	ZN(HL)	0.0010	0.2968
A2	!A1&B1&!B2&C	0.0100	ZN(HL)	0.0010	0.1958
A2	!A1&B1&B2&C	0.0100	ZN(HL)	0.0010	0.1956
A1(LH)	!A2&!B1&!B2&!C	0.0100	n/a	n/a	0.0518
A1(LH)	!A2&!B1&!B2&C	0.0100	n/a	n/a	0.3301
A1(LH)	!A2&!B1&B2&!C	0.0100	n/a	n/a	0.0519
A1(LH)	!A2&B1&!B2&!C	0.0100	n/a	n/a	0.0519
A1(LH)	!A2&B1&B2&!C	0.0100	n/a	n/a	0.0519
A1(LH)	A2&!B1&!B2&!C	0.0100	n/a	n/a	-0.1560
A1(LH)	A2&!B1&!B2&C	0.0100	n/a	n/a	-0.1554
A1(LH)	A2&!B1&B2&!C	0.0100	n/a	n/a	-0.1557
A1(LH)	A2&B1&!B2&!C	0.0100	n/a	n/a	-0.1557
A1(LH)	A2&B1&B2&!C	0.0100	n/a	n/a	-0.1557
A1(LH)	A2&!B1&B2&C	0.0100	n/a	n/a	-0.0403
A1(LH)	A2&B1&!B2&C	0.0100	n/a	n/a	-0.0403
A1(LH)	A2&B1&B2&C	0.0100	n/a	n/a	-0.0403
C(HL)	!A1&!A2&!B1&!B2	0.0100	n/a	n/a	0.1719
C(HL)	!A1&!A2&!B1&B2	0.0100	n/a	n/a	0.1525
C(HL)	!A1&!A2&B1&!B2	0.0100	n/a	n/a	0.1525
C(HL)	!A1&!A2&B1&B2	0.0100	n/a	n/a	0.1486
C(HL)	!A1&A2&!B1&!B2	0.0100	n/a	n/a	0.1302
C(HL)	A1&!A2&!B1&!B2	0.0100	n/a	n/a	0.1302
C(HL)	A1&A2&!B1&!B2	0.0100	n/a	n/a	0.1299
B2(LH)	!A1&!A2&!B1&!C	0.0100	n/a	n/a	-0.1405

continues on next page

Table 83 – continued from previous page

B2(LH)	!A1&!A2&!B1&C	0.0100	n/a	n/a	-0.1405
B2(LH)	!A1&!A2&B1&!C	0.0100	n/a	n/a	-0.1360
B2(LH)	!A1&!A2&B1&C	0.0100	n/a	n/a	-0.1360
B2(LH)	!A1&A2&!B1&!C	0.0100	n/a	n/a	-0.1406
B2(LH)	!A1&A2&B1&!C	0.0100	n/a	n/a	-0.1360
B2(LH)	A1&!A2&!B1&!C	0.0100	n/a	n/a	-0.1405
B2(LH)	A1&!A2&B1&!C	0.0100	n/a	n/a	-0.1360
B2(LH)	A1&A2&!B1&!C	0.0100	n/a	n/a	-0.1405
B2(LH)	A1&A2&B1&!C	0.0100	n/a	n/a	-0.1360
B2(LH)	!A1&A2&B1&C	0.0100	n/a	n/a	-0.1172
B2(LH)	A1&!A2&B1&C	0.0100	n/a	n/a	-0.1172
B2(LH)	A1&A2&B1&C	0.0100	n/a	n/a	-0.1172
A2(HL)	!A1&!B1&!B2&!C	0.0100	n/a	n/a	0.1590
A2(HL)	!A1&!B1&!B2&C	0.0100	n/a	n/a	0.1591
A2(HL)	!A1&!B1&B2&!C	0.0100	n/a	n/a	0.1590
A2(HL)	!A1&B1&!B2&!C	0.0100	n/a	n/a	0.1590
A2(HL)	!A1&B1&B2&!C	0.0100	n/a	n/a	0.1590
A2(HL)	A1&!B1&!B2&!C	0.0100	n/a	n/a	0.1660
A2(HL)	A1&!B1&!B2&C	0.0100	n/a	n/a	0.1659
A2(HL)	A1&!B1&B2&!C	0.0100	n/a	n/a	0.1661
A2(HL)	A1&B1&!B2&!C	0.0100	n/a	n/a	0.1661
A2(HL)	A1&B1&B2&!C	0.0100	n/a	n/a	0.1660
A2(HL)	A1&!B1&B2&C	0.0100	n/a	n/a	0.1406
A2(HL)	A1&B1&!B2&C	0.0100	n/a	n/a	0.1406
A2(HL)	A1&B1&B2&C	0.0100	n/a	n/a	0.1406
B1(HL)	!A1&!A2&!B2&!C	0.0100	n/a	n/a	0.1416
B1(HL)	!A1&!A2&!B2&C	0.0100	n/a	n/a	0.1439
B1(HL)	!A1&!A2&B2&!C	0.0100	n/a	n/a	0.1412
B1(HL)	!A1&!A2&B2&C	0.0100	n/a	n/a	0.1412
B1(HL)	!A1&A2&!B2&!C	0.0100	n/a	n/a	0.1449
B1(HL)	!A1&A2&B2&!C	0.0100	n/a	n/a	0.1413
B1(HL)	A1&!A2&!B2&!C	0.0100	n/a	n/a	0.1450
B1(HL)	A1&!A2&B2&!C	0.0100	n/a	n/a	0.1412
B1(HL)	A1&A2&!B2&!C	0.0100	n/a	n/a	0.1447
B1(HL)	A1&A2&B2&!C	0.0100	n/a	n/a	0.1412
B1(HL)	!A1&A2&B2&C	0.0100	n/a	n/a	0.1073
B1(HL)	A1&!A2&B2&C	0.0100	n/a	n/a	0.1073
B1(HL)	A1&A2&B2&C	0.0100	n/a	n/a	0.1073
B2(HL)	!A1&!A2&!B1&!C	0.0100	n/a	n/a	0.1410
B2(HL)	!A1&!A2&!B1&C	0.0100	n/a	n/a	0.1434
B2(HL)	!A1&!A2&B1&!C	0.0100	n/a	n/a	0.1409
B2(HL)	!A1&!A2&B1&C	0.0100	n/a	n/a	0.1408
B2(HL)	!A1&A2&!B1&!C	0.0100	n/a	n/a	0.1444
B2(HL)	!A1&A2&B1&!C	0.0100	n/a	n/a	0.1409
B2(HL)	A1&!A2&!B1&!C	0.0100	n/a	n/a	0.1444
B2(HL)	A1&!A2&B1&!C	0.0100	n/a	n/a	0.1407
B2(HL)	A1&A2&!B1&!C	0.0100	n/a	n/a	0.1442
B2(HL)	A1&A2&B1&!C	0.0100	n/a	n/a	0.1409
B2(HL)	!A1&A2&B1&C	0.0100	n/a	n/a	0.1407
B2(HL)	A1&!A2&B1&C	0.0100	n/a	n/a	0.1407
B2(HL)	A1&A2&B1&C	0.0100	n/a	n/a	0.1407
A1(HL)	!A2&!B1&!B2&!C	0.0100	n/a	n/a	0.1597

continues on next page

Table 83 – continued from previous page

A1(HL)	!A2&!B1&!B2&C	0.0100	n/a	n/a	0.1596
A1(HL)	!A2&!B1&B2&!C	0.0100	n/a	n/a	0.1596
A1(HL)	!A2&B1&!B2&!C	0.0100	n/a	n/a	0.1596
A1(HL)	!A2&B1&B2&!C	0.0100	n/a	n/a	0.1596
A1(HL)	A2&!B1&!B2&!C	0.0100	n/a	n/a	0.1663
A1(HL)	A2&!B1&!B2&C	0.0100	n/a	n/a	0.1660
A1(HL)	A2&!B1&B2&!C	0.0100	n/a	n/a	0.1664
A1(HL)	A2&B1&!B2&!C	0.0100	n/a	n/a	0.1663
A1(HL)	A2&B1&B2&!C	0.0100	n/a	n/a	0.1663
A1(HL)	A2&!B1&B2&C	0.0100	n/a	n/a	0.1093
A1(HL)	A2&B1&!B2&C	0.0100	n/a	n/a	0.1094
A1(HL)	A2&B1&B2&C	0.0100	n/a	n/a	0.1094
B1(LH)	!A1&!A2&!B2&!C	0.0100	n/a	n/a	-0.1415
B1(LH)	!A1&!A2&!B2&C	0.0100	n/a	n/a	-0.1416
B1(LH)	!A1&!A2&B2&!C	0.0100	n/a	n/a	-0.1378
B1(LH)	!A1&!A2&B2&C	0.0100	n/a	n/a	-0.1373
B1(LH)	!A1&A2&!B2&!C	0.0100	n/a	n/a	-0.1414
B1(LH)	!A1&A2&B2&!C	0.0100	n/a	n/a	-0.1375
B1(LH)	A1&!A2&!B2&!C	0.0100	n/a	n/a	-0.1415
B1(LH)	A1&!A2&B2&!C	0.0100	n/a	n/a	-0.1376
B1(LH)	A1&A2&!B2&!C	0.0100	n/a	n/a	-0.1415
B1(LH)	A1&A2&B2&!C	0.0100	n/a	n/a	-0.1376
B1(LH)	!A1&A2&B2&C	0.0100	n/a	n/a	-0.0403
B1(LH)	A1&!A2&B2&C	0.0100	n/a	n/a	-0.0403
B1(LH)	A1&A2&B2&C	0.0100	n/a	n/a	-0.0403
C(LH)	!A1&!A2&!B1&!B2	0.0100	n/a	n/a	-0.1206
C(LH)	!A1&!A2&!B1&B2	0.0100	n/a	n/a	-0.1202
C(LH)	!A1&!A2&B1&!B2	0.0100	n/a	n/a	-0.1201
C(LH)	!A1&!A2&B1&B2	0.0100	n/a	n/a	-0.1202
C(LH)	!A1&A2&!B1&!B2	0.0100	n/a	n/a	0.0231
C(LH)	A1&!A2&!B1&!B2	0.0100	n/a	n/a	0.0230
C(LH)	A1&A2&!B1&!B2	0.0100	n/a	n/a	0.0232
A2(LH)	!A1&!B1&!B2&!C	0.0100	n/a	n/a	0.0528
A2(LH)	!A1&!B1&!B2&C	0.0100	n/a	n/a	0.3316
A2(LH)	!A1&!B1&B2&!C	0.0100	n/a	n/a	0.0530
A2(LH)	!A1&B1&!B2&!C	0.0100	n/a	n/a	0.0529
A2(LH)	!A1&B1&B2&!C	0.0100	n/a	n/a	0.0530
A2(LH)	A1&!B1&!B2&!C	0.0100	n/a	n/a	-0.1542
A2(LH)	A1&!B1&!B2&C	0.0100	n/a	n/a	-0.1541
A2(LH)	A1&!B1&B2&!C	0.0100	n/a	n/a	-0.1542
A2(LH)	A1&B1&!B2&!C	0.0100	n/a	n/a	-0.1542
A2(LH)	A1&B1&B2&!C	0.0100	n/a	n/a	-0.1542
A2(LH)	A1&!B1&B2&C	0.0100	n/a	n/a	-0.1171
A2(LH)	A1&B1&!B2&C	0.0100	n/a	n/a	-0.1171
A2(LH)	A1&B1&B2&C	0.0100	n/a	n/a	-0.1171

LEAKAGE POWER

When Condition	Power (nW)
!A1&!A2&!B1&!B2&!C	0.2515
!A1&!A2&!B1&!B2&C	0.2520
!A1&!A2&!B1&B2&!C	0.2515
!A1&!A2&!B1&B2&C	0.2536
!A1&!A2&B1&!B2&!C	0.2515
!A1&!A2&B1&!B2&C	0.2536
!A1&!A2&B1&B2&!C	0.2515
!A1&!A2&B1&B2&C	0.2536
!A1&A2&!B1&!B2&!C	0.4903
!A1&A2&!B1&!B2&C	0.7260
!A1&A2&!B1&B2&!C	0.4908
!A1&A2&B1&!B2&!C	0.4908
!A1&A2&B1&B2&!C	0.4908
A1&!A2&!B1&!B2&!C	0.4903
A1&!A2&!B1&!B2&C	0.7260
A1&!A2&!B1&B2&!C	0.4908
A1&!A2&B1&!B2&!C	0.4908
A1&!A2&B1&B2&!C	0.4908
A1&A2&!B1&!B2&!C	0.4915
A1&A2&!B1&!B2&C	0.7274
A1&A2&!B1&B2&!C	0.4920
A1&A2&B1&!B2&!C	0.4920
A1&A2&B1&B2&!C	0.4920
!A1&A2&!B1&B2&C	0.6521
!A1&A2&B1&!B2&C	0.5093
!A1&A2&B1&B2&C	0.5093
A1&!A2&!B1&B2&C	0.5093
A1&!A2&B1&!B2&C	0.3666
A1&!A2&B1&B2&C	0.3666
A1&A2&!B1&B2&C	0.5093
A1&A2&B1&!B2&C	0.3666
A1&A2&B1&B2&C	0.3666

gf180mcu_fd_sc_mcu7t5v0__oai222_1

gf180mcu_fd_sc_mcu7t5v0__oai222_1 symbol

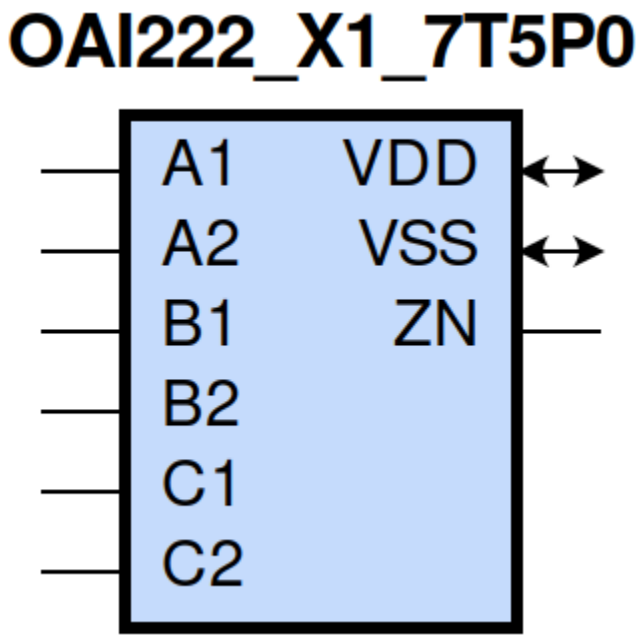

gf180mcu_fd_sc_mcu7t5v0__oai222_1 schematic

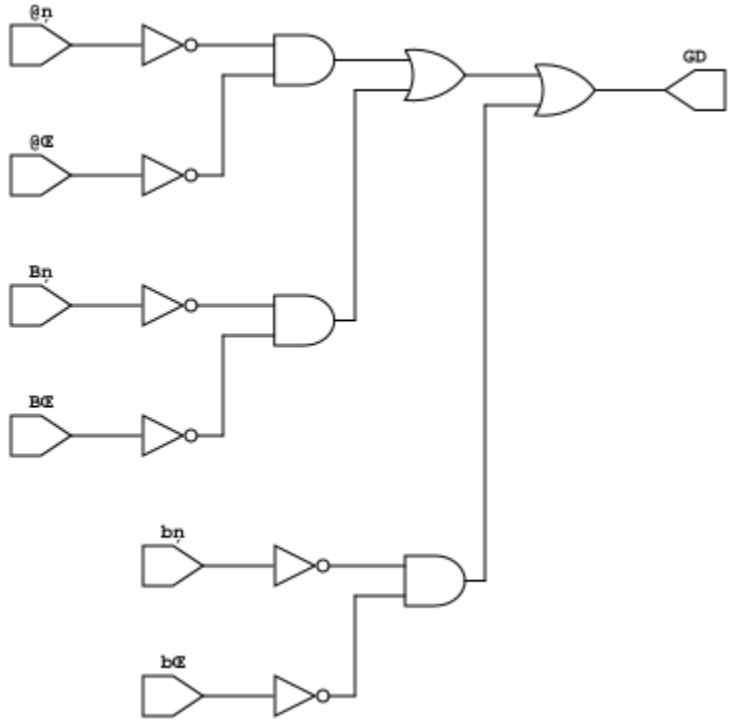

gf180mcu_fd_sc_mcu7t5v0__oai222_1 layout

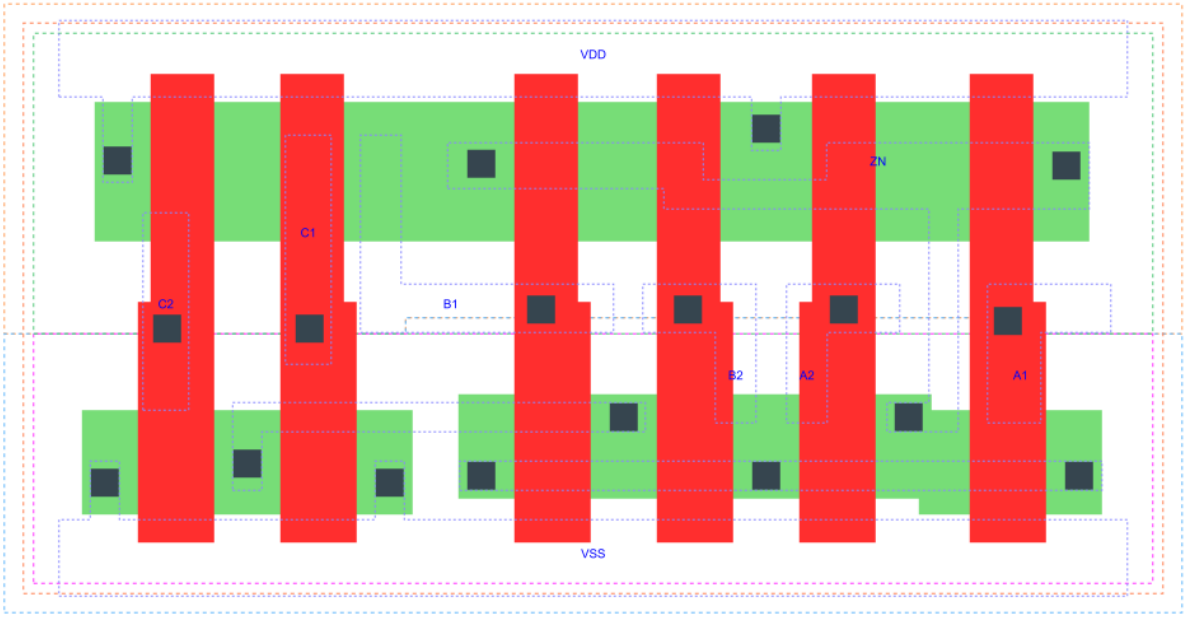

OAI222_X1 is a three 2-input OR into 3-input NAND, NAND[OR(A1,A2),OR(B1,B2),OR(C1,C2)], 1X drive strength

Attributes

Attribute	Value
area	32.928000 μm^2

OUTPUT FUNCTIONS

Output Pin	Function
ZN	(((!A1)&(!A2))|((!B1)&(!B2))|((!C1)&(!C2)))

TRUTH TABLE FOR ZN

A1	A2	B1	B2	C1	C2	ZN
0	0	?	?	?	?	1
?	?	0	0	?	?	1
?	?	?	?	0	0	1
1	?	1	?	1	?	0
1	?	1	?	?	1	0
1	?	?	1	1	?	0
1	?	?	1	?	1	0
?	1	1	?	1	?	0
?	1	1	?	?	1	0
?	1	?	1	1	?	0
?	1	?	1	?	1	0

FUNCTIONAL SCHEMATIC

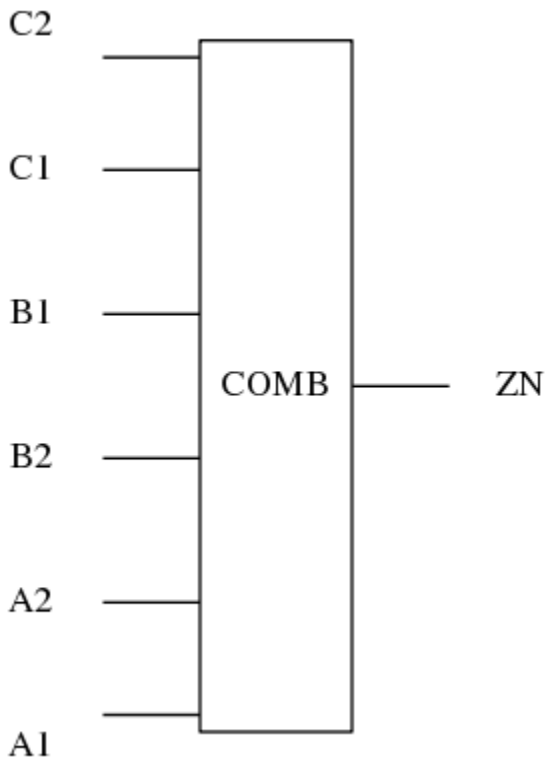

PIN CAPACITANCE (pf)

Pin	Type	Capacitance (pf)
C2	input	0.0043
C1	input	0.0045
B1	input	0.0049
B2	input	0.0045
A2	input	0.0045
A1	input	0.0046

DELAY AND OUTPUT TRANSITION TIME corresponding to min slew and load

Input Pin	Output	When Condition	Tin (ns)	Out Load (pf)	Delay (ns)	Tout (ns)
C2(LH)	ZN(HL)	!A1&A2&!B1&B2&!C1	0.0100	0.0010	0.2744	0.1474
C2(LH)	ZN(HL)	!A1&A2&B1&!B2&!C1	0.0100	0.0010	0.2417	0.1263
C2(LH)	ZN(HL)	!A1&A2&B1&B2&!C1	0.0100	0.0010	0.2160	0.1056
C2(LH)	ZN(HL)	A1&!A2&!B1&B2&!C1	0.0100	0.0010	0.2406	0.1255
C2(LH)	ZN(HL)	A1&!A2&B1&!B2&!C1	0.0100	0.0010	0.2085	0.1047
C2(LH)	ZN(HL)	A1&!A2&B1&B2&!C1	0.0100	0.0010	0.1880	0.0880
C2(LH)	ZN(HL)	A1&A2&!B1&B2&!C1	0.0100	0.0010	0.2099	0.1223
C2(LH)	ZN(HL)	A1&A2&B1&!B2&!C1	0.0100	0.0010	0.1834	0.1044
C2(LH)	ZN(HL)	A1&A2&B1&B2&!C1	0.0100	0.0010	0.1580	0.0832
C2(HL)	ZN(LH)	!A1&A2&!B1&B2&!C1	0.0100	0.0010	0.3911	0.3681
C2(HL)	ZN(LH)	!A1&A2&B1&!B2&!C1	0.0100	0.0010	0.3726	0.3192
C2(HL)	ZN(LH)	!A1&A2&B1&B2&!C1	0.0100	0.0010	0.3931	0.3347
C2(HL)	ZN(LH)	A1&!A2&!B1&B2&!C1	0.0100	0.0010	0.3723	0.3172
C2(HL)	ZN(LH)	A1&!A2&B1&!B2&!C1	0.0100	0.0010	0.3555	0.2673
C2(HL)	ZN(LH)	A1&!A2&B1&B2&!C1	0.0100	0.0010	0.3751	0.2827
C2(HL)	ZN(LH)	A1&A2&!B1&B2&!C1	0.0100	0.0010	0.4037	0.3379
C2(HL)	ZN(LH)	A1&A2&B1&!B2&!C1	0.0100	0.0010	0.3880	0.2899
C2(HL)	ZN(LH)	A1&A2&B1&B2&!C1	0.0100	0.0010	0.4101	0.3063
C1(LH)	ZN(HL)	!A1&A2&!B1&B2&!C2	0.0100	0.0010	0.2459	0.1269
C1(LH)	ZN(HL)	!A1&A2&B1&!B2&!C2	0.0100	0.0010	0.2138	0.1061
C1(LH)	ZN(HL)	!A1&A2&B1&B2&!C2	0.0100	0.0010	0.1922	0.0887
C1(LH)	ZN(HL)	A1&!A2&!B1&B2&!C2	0.0100	0.0010	0.2128	0.1053
C1(LH)	ZN(HL)	A1&!A2&B1&!B2&!C2	0.0100	0.0010	0.1819	0.0839
C1(LH)	ZN(HL)	A1&!A2&B1&B2&!C2	0.0100	0.0010	0.1653	0.0711
C1(LH)	ZN(HL)	A1&A2&!B1&B2&!C2	0.0100	0.0010	0.1867	0.1049
C1(LH)	ZN(HL)	A1&A2&B1&!B2&!C2	0.0100	0.0010	0.1615	0.0866
C1(LH)	ZN(HL)	A1&A2&B1&B2&!C2	0.0100	0.0010	0.1408	0.0695
C1(HL)	ZN(LH)	!A1&A2&!B1&B2&!C2	0.0100	0.0010	0.3668	0.3681
C1(HL)	ZN(LH)	!A1&A2&B1&!B2&!C2	0.0100	0.0010	0.3484	0.3190
C1(HL)	ZN(LH)	!A1&A2&B1&B2&!C2	0.0100	0.0010	0.3689	0.3347
C1(HL)	ZN(LH)	A1&!A2&!B1&B2&!C2	0.0100	0.0010	0.3481	0.3173
C1(HL)	ZN(LH)	A1&!A2&B1&!B2&!C2	0.0100	0.0010	0.3314	0.2677
C1(HL)	ZN(LH)	A1&!A2&B1&B2&!C2	0.0100	0.0010	0.3512	0.2826
C1(HL)	ZN(LH)	A1&A2&!B1&B2&!C2	0.0100	0.0010	0.3794	0.3379
C1(HL)	ZN(LH)	A1&A2&B1&!B2&!C2	0.0100	0.0010	0.3639	0.2901
C1(HL)	ZN(LH)	A1&A2&B1&B2&!C2	0.0100	0.0010	0.3859	0.3063

continues on next page

Table 85 – continued from previous page

B1(LH)	ZN(HL)	!A1&A2&!B2&!C1&C2	0.0100	0.0010	0.2179	0.1262
B1(LH)	ZN(HL)	!A1&A2&!B2&C1&!C2	0.0100	0.0010	0.1866	0.1059
B1(LH)	ZN(HL)	!A1&A2&!B2&C1&C2	0.0100	0.0010	0.1624	0.0874
B1(LH)	ZN(HL)	A1&!A2&!B2&!C1&C2	0.0100	0.0010	0.1846	0.1043
B1(LH)	ZN(HL)	A1&!A2&!B2&C1&!C2	0.0100	0.0010	0.1549	0.0839
B1(LH)	ZN(HL)	A1&!A2&!B2&C1&C2	0.0100	0.0010	0.1357	0.0687
B1(LH)	ZN(HL)	A1&A2&!B2&!C1&C2	0.0100	0.0010	0.1589	0.1043
B1(LH)	ZN(HL)	A1&A2&!B2&C1&!C2	0.0100	0.0010	0.1343	0.0866
B1(LH)	ZN(HL)	A1&A2&!B2&C1&C2	0.0100	0.0010	0.1156	0.0666
B1(HL)	ZN(LH)	!A1&A2&!B2&!C1&C2	0.0100	0.0010	0.2943	0.3034
B1(HL)	ZN(LH)	!A1&A2&!B2&C1&!C2	0.0100	0.0010	0.2793	0.2586
B1(HL)	ZN(LH)	!A1&A2&!B2&C1&C2	0.0100	0.0010	0.2779	0.2586
B1(HL)	ZN(LH)	A1&!A2&!B2&!C1&C2	0.0100	0.0010	0.2790	0.2550
B1(HL)	ZN(LH)	A1&!A2&!B2&C1&!C2	0.0100	0.0010	0.2660	0.2107
B1(HL)	ZN(LH)	A1&!A2&!B2&C1&C2	0.0100	0.0010	0.2646	0.2106
B1(HL)	ZN(LH)	A1&A2&!B2&!C1&C2	0.0100	0.0010	0.3051	0.2743
B1(HL)	ZN(LH)	A1&A2&!B2&C1&!C2	0.0100	0.0010	0.2924	0.2306
B1(HL)	ZN(LH)	A1&A2&!B2&C1&C2	0.0100	0.0010	0.2909	0.2306
B2(HL)	ZN(LH)	!A1&A2&!B1&!C1&C2	0.0100	0.0010	0.3202	0.3033
B2(HL)	ZN(LH)	!A1&A2&!B1&C1&!C2	0.0100	0.0010	0.3052	0.2587
B2(HL)	ZN(LH)	!A1&A2&!B1&C1&C2	0.0100	0.0010	0.3038	0.2586
B2(HL)	ZN(LH)	A1&!A2&!B1&!C1&C2	0.0100	0.0010	0.3049	0.2550
B2(HL)	ZN(LH)	A1&!A2&!B1&C1&!C2	0.0100	0.0010	0.2919	0.2103
B2(HL)	ZN(LH)	A1&!A2&!B1&C1&C2	0.0100	0.0010	0.2904	0.2102
B2(HL)	ZN(LH)	A1&A2&!B1&!C1&C2	0.0100	0.0010	0.3311	0.2744
B2(HL)	ZN(LH)	A1&A2&!B1&C1&!C2	0.0100	0.0010	0.3185	0.2306
B2(HL)	ZN(LH)	A1&A2&!B1&C1&C2	0.0100	0.0010	0.3169	0.2304
B2(LH)	ZN(HL)	!A1&A2&!B1&!C1&C2	0.0100	0.0010	0.2476	0.1475
B2(LH)	ZN(HL)	!A1&A2&!B1&C1&!C2	0.0100	0.0010	0.2157	0.1269
B2(LH)	ZN(HL)	!A1&A2&!B1&C1&C2	0.0100	0.0010	0.1870	0.1051
B2(LH)	ZN(HL)	A1&!A2&!B1&!C1&C2	0.0100	0.0010	0.2135	0.1254
B2(LH)	ZN(HL)	A1&!A2&!B1&C1&!C2	0.0100	0.0010	0.1825	0.1050
B2(LH)	ZN(HL)	A1&!A2&!B1&C1&C2	0.0100	0.0010	0.1589	0.0870
B2(LH)	ZN(HL)	A1&A2&!B1&!C1&C2	0.0100	0.0010	0.1829	0.1222
B2(LH)	ZN(HL)	A1&A2&!B1&C1&!C2	0.0100	0.0010	0.1570	0.1050
B2(LH)	ZN(HL)	A1&A2&!B1&C1&C2	0.0100	0.0010	0.1334	0.0812
A2(HL)	ZN(LH)	!A1&!B1&B2&!C1&C2	0.0100	0.0010	0.2141	0.2180
A2(HL)	ZN(LH)	!A1&!B1&B2&C1&!C2	0.0100	0.0010	0.2024	0.1746
A2(HL)	ZN(LH)	!A1&!B1&B2&C1&C2	0.0100	0.0010	0.2023	0.1746
A2(HL)	ZN(LH)	!A1&B1&!B2&!C1&C2	0.0100	0.0010	0.2024	0.1731
A2(HL)	ZN(LH)	!A1&B1&!B2&C1&!C2	0.0100	0.0010	0.1924	0.1316
A2(HL)	ZN(LH)	!A1&B1&!B2&C1&C2	0.0100	0.0010	0.1923	0.1316
A2(HL)	ZN(LH)	!A1&B1&B2&!C1&C2	0.0100	0.0010	0.2016	0.1731
A2(HL)	ZN(LH)	!A1&B1&B2&C1&!C2	0.0100	0.0010	0.1916	0.1316
A2(HL)	ZN(LH)	!A1&B1&B2&C1&C2	0.0100	0.0010	0.1914	0.1316
A2(LH)	ZN(HL)	!A1&!B1&B2&!C1&C2	0.0100	0.0010	0.1884	0.1474
A2(LH)	ZN(HL)	!A1&!B1&B2&C1&!C2	0.0100	0.0010	0.1565	0.1264
A2(LH)	ZN(HL)	!A1&!B1&B2&C1&C2	0.0100	0.0010	0.1413	0.1051
A2(LH)	ZN(HL)	!A1&B1&!B2&!C1&C2	0.0100	0.0010	0.1556	0.1256
A2(LH)	ZN(HL)	!A1&B1&!B2&C1&!C2	0.0100	0.0010	0.1245	0.1042
A2(LH)	ZN(HL)	!A1&B1&!B2&C1&C2	0.0100	0.0010	0.1140	0.0869
A2(LH)	ZN(HL)	!A1&B1&B2&!C1&C2	0.0100	0.0010	0.1347	0.1042

continues on next page

Table 85 – continued from previous page

A2(LH)	ZN(HL)	!A1&B1&B2&C1&!C2	0.0100	0.0010	0.1083	0.0863
A2(LH)	ZN(HL)	!A1&B1&B2&C1&C2	0.0100	0.0010	0.0981	0.0696
A1(HL)	ZN(LH)	!A2&!B1&B2&!C1&C2	0.0100	0.0010	0.1863	0.2180
A1(HL)	ZN(LH)	!A2&!B1&B2&C1&!C2	0.0100	0.0010	0.1748	0.1744
A1(HL)	ZN(LH)	!A2&!B1&B2&C1&C2	0.0100	0.0010	0.1747	0.1746
A1(HL)	ZN(LH)	!A2&B1&!B2&!C1&C2	0.0100	0.0010	0.1747	0.1728
A1(HL)	ZN(LH)	!A2&B1&!B2&C1&!C2	0.0100	0.0010	0.1646	0.1315
A1(HL)	ZN(LH)	!A2&B1&!B2&C1&C2	0.0100	0.0010	0.1645	0.1315
A1(HL)	ZN(LH)	!A2&B1&B2&!C1&C2	0.0100	0.0010	0.1737	0.1728
A1(HL)	ZN(LH)	!A2&B1&B2&C1&!C2	0.0100	0.0010	0.1638	0.1315
A1(HL)	ZN(LH)	!A2&B1&B2&C1&C2	0.0100	0.0010	0.1636	0.1315
A1(LH)	ZN(HL)	!A2&!B1&B2&!C1&C2	0.0100	0.0010	0.1575	0.1247
A1(LH)	ZN(HL)	!A2&!B1&B2&C1&!C2	0.0100	0.0010	0.1265	0.1034
A1(LH)	ZN(HL)	!A2&!B1&B2&C1&C2	0.0100	0.0010	0.1158	0.0862
A1(LH)	ZN(HL)	!A2&B1&!B2&!C1&C2	0.0100	0.0010	0.1256	0.1023
A1(LH)	ZN(HL)	!A2&B1&!B2&C1&!C2	0.0100	0.0010	0.0964	0.0797
A1(LH)	ZN(HL)	!A2&B1&!B2&C1&C2	0.0100	0.0010	0.0902	0.0675
A1(LH)	ZN(HL)	!A2&B1&B2&!C1&C2	0.0100	0.0010	0.1096	0.0844
A1(LH)	ZN(HL)	!A2&B1&B2&C1&!C2	0.0100	0.0010	0.0854	0.0655
A1(LH)	ZN(HL)	!A2&B1&B2&C1&C2	0.0100	0.0010	0.0792	0.0540

DYNAMIC ENERGY

Input Pin	When Condition	Tin (ns)	Output	Out Load (pf)	Energy (uW/MHz)
A1	!A2&!B1&B2&!C1&C2	0.0100	ZN(LH)	0.0010	0.1985
A1	!A2&!B1&B2&C1&!C2	0.0100	ZN(LH)	0.0010	0.1721
A1	!A2&!B1&B2&C1&C2	0.0100	ZN(LH)	0.0010	0.1721
A1	!A2&B1&!B2&!C1&C2	0.0100	ZN(LH)	0.0010	0.1718
A1	!A2&B1&!B2&C1&!C2	0.0100	ZN(LH)	0.0010	0.1454
A1	!A2&B1&!B2&C1&C2	0.0100	ZN(LH)	0.0010	0.1453
A1	!A2&B1&B2&!C1&C2	0.0100	ZN(LH)	0.0010	0.1712
A1	!A2&B1&B2&C1&!C2	0.0100	ZN(LH)	0.0010	0.1447
A1	!A2&B1&B2&C1&C2	0.0100	ZN(LH)	0.0010	0.1447
B2	!A1&A2&!B1&!C1&C2	0.0100	ZN(LH)	0.0010	0.3314
B2	!A1&A2&!B1&C1&!C2	0.0100	ZN(LH)	0.0010	0.3050
B2	!A1&A2&!B1&C1&C2	0.0100	ZN(LH)	0.0010	0.3040
B2	A1&!A2&!B1&!C1&C2	0.0100	ZN(LH)	0.0010	0.3046
B2	A1&!A2&!B1&C1&!C2	0.0100	ZN(LH)	0.0010	0.2780
B2	A1&!A2&!B1&C1&C2	0.0100	ZN(LH)	0.0010	0.2770
B2	A1&A2&!B1&!C1&C2	0.0100	ZN(LH)	0.0010	0.3272
B2	A1&A2&!B1&C1&!C2	0.0100	ZN(LH)	0.0010	0.3006
B2	A1&A2&!B1&C1&C2	0.0100	ZN(LH)	0.0010	0.2997
B1	!A1&A2&!B2&!C1&C2	0.0100	ZN(HL)	0.0010	0.0921
B1	!A1&A2&!B2&C1&!C2	0.0100	ZN(HL)	0.0010	0.0696
B1	!A1&A2&!B2&C1&C2	0.0100	ZN(HL)	0.0010	0.0696
B1	A1&!A2&!B2&!C1&C2	0.0100	ZN(HL)	0.0010	0.0660
B1	A1&!A2&!B2&C1&!C2	0.0100	ZN(HL)	0.0010	0.0437

continues on next page

Table 86 – continued from previous page

B1	A1&!A2&!B2&C1&C2	0.0100	ZN(HL)	0.0010	0.0435
B1	A1&A2&!B2&!C1&C2	0.0100	ZN(HL)	0.0010	0.0660
B1	A1&A2&!B2&C1&!C2	0.0100	ZN(HL)	0.0010	0.0436
B1	A1&A2&!B2&C1&C2	0.0100	ZN(HL)	0.0010	0.0435
A2	!A1&!B1&B2&!C1&C2	0.0100	ZN(LH)	0.0010	0.2256
A2	!A1&!B1&B2&C1&!C2	0.0100	ZN(LH)	0.0010	0.1992
A2	!A1&!B1&B2&C1&C2	0.0100	ZN(LH)	0.0010	0.1991
A2	!A1&B1&!B2&!C1&C2	0.0100	ZN(LH)	0.0010	0.1989
A2	!A1&B1&!B2&C1&!C2	0.0100	ZN(LH)	0.0010	0.1724
A2	!A1&B1&!B2&C1&C2	0.0100	ZN(LH)	0.0010	0.1724
A2	!A1&B1&B2&!C1&C2	0.0100	ZN(LH)	0.0010	0.1983
A2	!A1&B1&B2&C1&!C2	0.0100	ZN(LH)	0.0010	0.1718
A2	!A1&B1&B2&C1&C2	0.0100	ZN(LH)	0.0010	0.1717
B1	!A1&A2&!B2&!C1&C2	0.0100	ZN(LH)	0.0010	0.3046
B1	!A1&A2&!B2&C1&!C2	0.0100	ZN(LH)	0.0010	0.2781
B1	!A1&A2&!B2&C1&C2	0.0100	ZN(LH)	0.0010	0.2772
B1	A1&!A2&!B2&!C1&C2	0.0100	ZN(LH)	0.0010	0.2777
B1	A1&!A2&!B2&C1&!C2	0.0100	ZN(LH)	0.0010	0.2513
B1	A1&!A2&!B2&C1&C2	0.0100	ZN(LH)	0.0010	0.2503
B1	A1&A2&!B2&!C1&C2	0.0100	ZN(LH)	0.0010	0.3003
B1	A1&A2&!B2&C1&!C2	0.0100	ZN(LH)	0.0010	0.2738
B1	A1&A2&!B2&C1&C2	0.0100	ZN(LH)	0.0010	0.2729
C1	!A1&A2&!B1&B2&!C2	0.0100	ZN(HL)	0.0010	0.0940
C1	!A1&A2&B1&!B2&!C2	0.0100	ZN(HL)	0.0010	0.0700
C1	!A1&A2&B1&B2&!C2	0.0100	ZN(HL)	0.0010	0.0698
C1	A1&!A2&!B1&B2&!C2	0.0100	ZN(HL)	0.0010	0.0680
C1	A1&!A2&B1&!B2&!C2	0.0100	ZN(HL)	0.0010	0.0437
C1	A1&!A2&B1&B2&!C2	0.0100	ZN(HL)	0.0010	0.0438
C1	A1&A2&!B1&B2&!C2	0.0100	ZN(HL)	0.0010	0.0679
C1	A1&A2&B1&!B2&!C2	0.0100	ZN(HL)	0.0010	0.0438
C1	A1&A2&B1&B2&!C2	0.0100	ZN(HL)	0.0010	0.0438
A2	!A1&!B1&B2&!C1&C2	0.0100	ZN(HL)	0.0010	0.1131
A2	!A1&!B1&B2&C1&!C2	0.0100	ZN(HL)	0.0010	0.0908
A2	!A1&!B1&B2&C1&C2	0.0100	ZN(HL)	0.0010	0.0908
A2	!A1&B1&!B2&!C1&C2	0.0100	ZN(HL)	0.0010	0.0892
A2	!A1&B1&!B2&C1&!C2	0.0100	ZN(HL)	0.0010	0.0669
A2	!A1&B1&!B2&C1&C2	0.0100	ZN(HL)	0.0010	0.0668
A2	!A1&B1&B2&!C1&C2	0.0100	ZN(HL)	0.0010	0.0891
A2	!A1&B1&B2&C1&!C2	0.0100	ZN(HL)	0.0010	0.0668
A2	!A1&B1&B2&C1&C2	0.0100	ZN(HL)	0.0010	0.0667
C2	!A1&A2&!B1&B2&!C1	0.0100	ZN(HL)	0.0010	0.1127
C2	!A1&A2&B1&!B2&!C1	0.0100	ZN(HL)	0.0010	0.0887
C2	!A1&A2&B1&B2&!C1	0.0100	ZN(HL)	0.0010	0.0886
C2	A1&!A2&!B1&B2&!C1	0.0100	ZN(HL)	0.0010	0.0867
C2	A1&!A2&B1&!B2&!C1	0.0100	ZN(HL)	0.0010	0.0628
C2	A1&!A2&B1&B2&!C1	0.0100	ZN(HL)	0.0010	0.0628
C2	A1&A2&!B1&B2&!C1	0.0100	ZN(HL)	0.0010	0.0867
C2	A1&A2&B1&!B2&!C1	0.0100	ZN(HL)	0.0010	0.0627
C2	A1&A2&B1&B2&!C1	0.0100	ZN(HL)	0.0010	0.0626
C1	!A1&A2&!B1&B2&!C2	0.0100	ZN(LH)	0.0010	0.3839
C1	!A1&A2&B1&!B2&!C2	0.0100	ZN(LH)	0.0010	0.3572
C1	!A1&A2&B1&B2&!C2	0.0100	ZN(LH)	0.0010	0.3789

continues on next page

Table 86 – continued from previous page

C1	A1&!A2&!B1&B2&!C2	0.0100	ZN(LH)	0.0010	0.3571
C1	A1&!A2&B1&!B2&!C2	0.0100	ZN(LH)	0.0010	0.3304
C1	A1&!A2&B1&B2&!C2	0.0100	ZN(LH)	0.0010	0.3522
C1	A1&A2&!B1&B2&!C2	0.0100	ZN(LH)	0.0010	0.3793
C1	A1&A2&B1&!B2&!C2	0.0100	ZN(LH)	0.0010	0.3524
C1	A1&A2&B1&B2&!C2	0.0100	ZN(LH)	0.0010	0.3743
C2	!A1&A2&!B1&B2&!C1	0.0100	ZN(LH)	0.0010	0.4103
C2	!A1&A2&B1&!B2&!C1	0.0100	ZN(LH)	0.0010	0.3836
C2	!A1&A2&B1&B2&!C1	0.0100	ZN(LH)	0.0010	0.4054
C2	A1&!A2&!B1&B2&!C1	0.0100	ZN(LH)	0.0010	0.3835
C2	A1&!A2&B1&!B2&!C1	0.0100	ZN(LH)	0.0010	0.3568
C2	A1&!A2&B1&B2&!C1	0.0100	ZN(LH)	0.0010	0.3784
C2	A1&A2&!B1&B2&!C1	0.0100	ZN(LH)	0.0010	0.4056
C2	A1&A2&B1&!B2&!C1	0.0100	ZN(LH)	0.0010	0.3789
C2	A1&A2&B1&B2&!C1	0.0100	ZN(LH)	0.0010	0.4008
A1	!A2&!B1&B2&!C1&C2	0.0100	ZN(HL)	0.0010	0.0904
A1	!A2&!B1&B2&C1&!C2	0.0100	ZN(HL)	0.0010	0.0680
A1	!A2&!B1&B2&C1&C2	0.0100	ZN(HL)	0.0010	0.0680
A1	!A2&B1&!B2&!C1&C2	0.0100	ZN(HL)	0.0010	0.0663
A1	!A2&B1&!B2&C1&!C2	0.0100	ZN(HL)	0.0010	0.0439
A1	!A2&B1&!B2&C1&C2	0.0100	ZN(HL)	0.0010	0.0439
A1	!A2&B1&B2&!C1&C2	0.0100	ZN(HL)	0.0010	0.0662
A1	!A2&B1&B2&C1&!C2	0.0100	ZN(HL)	0.0010	0.0439
A1	!A2&B1&B2&C1&C2	0.0100	ZN(HL)	0.0010	0.0437
B2	!A1&A2&!B1&!C1&C2	0.0100	ZN(HL)	0.0010	0.1126
B2	!A1&A2&!B1&C1&!C2	0.0100	ZN(HL)	0.0010	0.0903
B2	!A1&A2&!B1&C1&C2	0.0100	ZN(HL)	0.0010	0.0902
B2	A1&!A2&!B1&!C1&C2	0.0100	ZN(HL)	0.0010	0.0866
B2	A1&!A2&!B1&C1&!C2	0.0100	ZN(HL)	0.0010	0.0644
B2	A1&!A2&!B1&C1&C2	0.0100	ZN(HL)	0.0010	0.0644
B2	A1&A2&!B1&!C1&C2	0.0100	ZN(HL)	0.0010	0.0866
B2	A1&A2&!B1&C1&!C2	0.0100	ZN(HL)	0.0010	0.0644
B2	A1&A2&!B1&C1&C2	0.0100	ZN(HL)	0.0010	0.0643
B2(LH)	!A1&!A2&!B1&!C1&!C2	0.0100	n/a	n/a	-0.0352
B2(LH)	!A1&!A2&!B1&!C1&C2	0.0100	n/a	n/a	-0.0352
B2(LH)	!A1&!A2&!B1&C1&!C2	0.0100	n/a	n/a	-0.0352
B2(LH)	!A1&!A2&!B1&C1&C2	0.0100	n/a	n/a	-0.0353
B2(LH)	!A1&!A2&B1&!C1&!C2	0.0100	n/a	n/a	-0.0340
B2(LH)	!A1&!A2&B1&!C1&C2	0.0100	n/a	n/a	-0.0340
B2(LH)	!A1&!A2&B1&C1&!C2	0.0100	n/a	n/a	-0.0340
B2(LH)	!A1&!A2&B1&C1&C2	0.0100	n/a	n/a	-0.0340
B2(LH)	!A1&A2&!B1&!C1&!C2	0.0100	n/a	n/a	0.0123
B2(LH)	!A1&A2&B1&!C1&!C2	0.0100	n/a	n/a	-0.0340
B2(LH)	A1&!A2&!B1&!C1&!C2	0.0100	n/a	n/a	0.0123
B2(LH)	A1&!A2&B1&!C1&!C2	0.0100	n/a	n/a	-0.0340
B2(LH)	A1&A2&!B1&!C1&!C2	0.0100	n/a	n/a	0.0124
B2(LH)	A1&A2&B1&!C1&!C2	0.0100	n/a	n/a	-0.0340
B2(LH)	!A1&A2&B1&!C1&C2	0.0100	n/a	n/a	-0.0293
B2(LH)	!A1&A2&B1&C1&!C2	0.0100	n/a	n/a	-0.0294
B2(LH)	!A1&A2&B1&C1&C2	0.0100	n/a	n/a	-0.0293
B2(LH)	A1&!A2&B1&!C1&C2	0.0100	n/a	n/a	-0.0293
B2(LH)	A1&!A2&B1&C1&!C2	0.0100	n/a	n/a	-0.0293

continues on next page

Table 86 – continued from previous page

B2(LH)	A1&!A2&B1&C1&C2	0.0100	n/a	n/a	-0.0293
B2(LH)	A1&A2&B1&!C1&C2	0.0100	n/a	n/a	-0.0293
B2(LH)	A1&A2&B1&C1&!C2	0.0100	n/a	n/a	-0.0294
B2(LH)	A1&A2&B1&C1&C2	0.0100	n/a	n/a	-0.0294
C2(HL)	!A1&!A2&!B1&!B2&!C1	0.0100	n/a	n/a	0.0354
C2(HL)	!A1&!A2&!B1&!B2&C1	0.0100	n/a	n/a	0.0352
C2(HL)	!A1&!A2&!B1&B2&!C1	0.0100	n/a	n/a	0.0355
C2(HL)	!A1&!A2&!B1&B2&C1	0.0100	n/a	n/a	0.0352
C2(HL)	!A1&!A2&B1&!B2&!C1	0.0100	n/a	n/a	0.0355
C2(HL)	!A1&!A2&B1&!B2&C1	0.0100	n/a	n/a	0.0352
C2(HL)	!A1&!A2&B1&B2&!C1	0.0100	n/a	n/a	0.0355
C2(HL)	!A1&!A2&B1&B2&C1	0.0100	n/a	n/a	0.0352
C2(HL)	!A1&A2&!B1&!B2&!C1	0.0100	n/a	n/a	0.0357
C2(HL)	!A1&A2&!B1&!B2&C1	0.0100	n/a	n/a	0.0352
C2(HL)	A1&!A2&!B1&!B2&!C1	0.0100	n/a	n/a	0.0357
C2(HL)	A1&!A2&!B1&!B2&C1	0.0100	n/a	n/a	0.0352
C2(HL)	A1&A2&!B1&!B2&!C1	0.0100	n/a	n/a	0.0357
C2(HL)	A1&A2&!B1&!B2&C1	0.0100	n/a	n/a	0.0352
C2(HL)	!A1&A2&!B1&B2&C1	0.0100	n/a	n/a	0.0352
C2(HL)	!A1&A2&B1&!B2&C1	0.0100	n/a	n/a	0.0352
C2(HL)	!A1&A2&B1&B2&C1	0.0100	n/a	n/a	0.0352
C2(HL)	A1&!A2&!B1&B2&C1	0.0100	n/a	n/a	0.0352
C2(HL)	A1&!A2&B1&!B2&C1	0.0100	n/a	n/a	0.0352
C2(HL)	A1&!A2&B1&B2&C1	0.0100	n/a	n/a	0.0352
C2(HL)	A1&A2&!B1&B2&C1	0.0100	n/a	n/a	0.0352
C2(HL)	A1&A2&B1&!B2&C1	0.0100	n/a	n/a	0.0352
C2(HL)	A1&A2&B1&B2&C1	0.0100	n/a	n/a	0.0352
B2(HL)	!A1&!A2&!B1&!C1&!C2	0.0100	n/a	n/a	0.0459
B2(HL)	!A1&!A2&!B1&!C1&C2	0.0100	n/a	n/a	0.0417
B2(HL)	!A1&!A2&!B1&C1&!C2	0.0100	n/a	n/a	0.0417
B2(HL)	!A1&!A2&!B1&C1&C2	0.0100	n/a	n/a	0.0409
B2(HL)	!A1&!A2&B1&!C1&!C2	0.0100	n/a	n/a	0.0469
B2(HL)	!A1&!A2&B1&!C1&C2	0.0100	n/a	n/a	0.0352
B2(HL)	!A1&!A2&B1&C1&!C2	0.0100	n/a	n/a	0.0352
B2(HL)	!A1&!A2&B1&C1&C2	0.0100	n/a	n/a	0.0352
B2(HL)	!A1&A2&!B1&!C1&!C2	0.0100	n/a	n/a	0.0366
B2(HL)	!A1&A2&B1&!C1&!C2	0.0100	n/a	n/a	0.0373
B2(HL)	A1&!A2&!B1&!C1&!C2	0.0100	n/a	n/a	0.0366
B2(HL)	A1&!A2&B1&!C1&!C2	0.0100	n/a	n/a	0.0373
B2(HL)	A1&A2&!B1&!C1&!C2	0.0100	n/a	n/a	0.0366
B2(HL)	A1&A2&B1&!C1&!C2	0.0100	n/a	n/a	0.0372
B2(HL)	!A1&A2&B1&!C1&C2	0.0100	n/a	n/a	0.0352
B2(HL)	!A1&A2&B1&C1&!C2	0.0100	n/a	n/a	0.0352
B2(HL)	!A1&A2&B1&C1&C2	0.0100	n/a	n/a	0.0352
B2(HL)	A1&!A2&B1&!C1&C2	0.0100	n/a	n/a	0.0352
B2(HL)	A1&!A2&B1&C1&!C2	0.0100	n/a	n/a	0.0352
B2(HL)	A1&!A2&B1&C1&C2	0.0100	n/a	n/a	0.0352
B2(HL)	A1&A2&B1&!C1&C2	0.0100	n/a	n/a	0.0352
B2(HL)	A1&A2&B1&C1&!C2	0.0100	n/a	n/a	0.0352
B2(HL)	A1&A2&B1&C1&C2	0.0100	n/a	n/a	0.0352
C2(LH)	!A1&!A2&!B1&!B2&!C1	0.0100	n/a	n/a	-0.0353
C2(LH)	!A1&!A2&!B1&!B2&C1	0.0100	n/a	n/a	-0.0341

continues on next page

Table 86 – continued from previous page

C2(LH)	!A1&!A2&!B1&B2&!C1	0.0100	n/a	n/a	-0.0353
C2(LH)	!A1&!A2&!B1&B2&C1	0.0100	n/a	n/a	-0.0341
C2(LH)	!A1&!A2&B1&!B2&!C1	0.0100	n/a	n/a	-0.0353
C2(LH)	!A1&!A2&B1&!B2&C1	0.0100	n/a	n/a	-0.0341
C2(LH)	!A1&!A2&B1&B2&!C1	0.0100	n/a	n/a	-0.0353
C2(LH)	!A1&!A2&B1&B2&C1	0.0100	n/a	n/a	-0.0341
C2(LH)	!A1&A2&!B1&!B2&!C1	0.0100	n/a	n/a	-0.0354
C2(LH)	!A1&A2&!B1&!B2&C1	0.0100	n/a	n/a	-0.0341
C2(LH)	A1&!A2&!B1&!B2&!C1	0.0100	n/a	n/a	-0.0353
C2(LH)	A1&!A2&!B1&!B2&C1	0.0100	n/a	n/a	-0.0341
C2(LH)	A1&A2&!B1&!B2&!C1	0.0100	n/a	n/a	-0.0353
C2(LH)	A1&A2&!B1&!B2&C1	0.0100	n/a	n/a	-0.0341
C2(LH)	!A1&A2&!B1&B2&C1	0.0100	n/a	n/a	-0.0294
C2(LH)	!A1&A2&B1&!B2&C1	0.0100	n/a	n/a	-0.0294
C2(LH)	!A1&A2&B1&B2&C1	0.0100	n/a	n/a	-0.0295
C2(LH)	A1&!A2&!B1&B2&C1	0.0100	n/a	n/a	-0.0294
C2(LH)	A1&!A2&B1&!B2&C1	0.0100	n/a	n/a	-0.0295
C2(LH)	A1&!A2&B1&B2&C1	0.0100	n/a	n/a	-0.0295
C2(LH)	A1&A2&!B1&B2&C1	0.0100	n/a	n/a	-0.0294
C2(LH)	A1&A2&B1&!B2&C1	0.0100	n/a	n/a	-0.0294
C2(LH)	A1&A2&B1&B2&C1	0.0100	n/a	n/a	-0.0295
A2(LH)	!A1&!B1&!B2&!C1&!C2	0.0100	n/a	n/a	0.0395
A2(LH)	!A1&!B1&!B2&!C1&C2	0.0100	n/a	n/a	0.0395
A2(LH)	!A1&!B1&!B2&C1&!C2	0.0100	n/a	n/a	0.0395
A2(LH)	!A1&!B1&!B2&C1&C2	0.0100	n/a	n/a	0.0395
A2(LH)	!A1&!B1&B2&!C1&!C2	0.0100	n/a	n/a	0.1221
A2(LH)	!A1&B1&!B2&!C1&!C2	0.0100	n/a	n/a	0.1221
A2(LH)	!A1&B1&B2&!C1&!C2	0.0100	n/a	n/a	0.1432
A2(LH)	A1&!B1&!B2&!C1&!C2	0.0100	n/a	n/a	-0.0385
A2(LH)	A1&!B1&!B2&!C1&C2	0.0100	n/a	n/a	-0.0385
A2(LH)	A1&!B1&!B2&C1&!C2	0.0100	n/a	n/a	-0.0385
A2(LH)	A1&!B1&!B2&C1&C2	0.0100	n/a	n/a	-0.0385
A2(LH)	A1&!B1&B2&!C1&!C2	0.0100	n/a	n/a	-0.0385
A2(LH)	A1&B1&!B2&!C1&!C2	0.0100	n/a	n/a	-0.0385
A2(LH)	A1&B1&B2&!C1&!C2	0.0100	n/a	n/a	-0.0385
A2(LH)	A1&!B1&B2&!C1&C2	0.0100	n/a	n/a	-0.0293
A2(LH)	A1&!B1&B2&C1&!C2	0.0100	n/a	n/a	-0.0293
A2(LH)	A1&!B1&B2&C1&C2	0.0100	n/a	n/a	-0.0292
A2(LH)	A1&B1&!B2&!C1&C2	0.0100	n/a	n/a	-0.0293
A2(LH)	A1&B1&!B2&C1&!C2	0.0100	n/a	n/a	-0.0293
A2(LH)	A1&B1&!B2&C1&C2	0.0100	n/a	n/a	-0.0293
A2(LH)	A1&B1&B2&!C1&C2	0.0100	n/a	n/a	-0.0293
A2(LH)	A1&B1&B2&C1&!C2	0.0100	n/a	n/a	-0.0292
A2(LH)	A1&B1&B2&C1&C2	0.0100	n/a	n/a	-0.0292
A1(LH)	!A2&!B1&!B2&!C1&!C2	0.0100	n/a	n/a	0.0390
A1(LH)	!A2&!B1&!B2&!C1&C2	0.0100	n/a	n/a	0.0391
A1(LH)	!A2&!B1&!B2&C1&!C2	0.0100	n/a	n/a	0.0391
A1(LH)	!A2&!B1&!B2&C1&C2	0.0100	n/a	n/a	0.0391
A1(LH)	!A2&!B1&B2&!C1&!C2	0.0100	n/a	n/a	0.1217
A1(LH)	!A2&B1&!B2&!C1&!C2	0.0100	n/a	n/a	0.1217
A1(LH)	!A2&B1&B2&!C1&!C2	0.0100	n/a	n/a	0.1428
A1(LH)	A2&!B1&!B2&!C1&!C2	0.0100	n/a	n/a	-0.0390

continues on next page

Table 86 – continued from previous page

A1(LH)	A2&!B1&!B2&!C1&C2	0.0100	n/a	n/a	-0.0390
A1(LH)	A2&!B1&!B2&C1&!C2	0.0100	n/a	n/a	-0.0389
A1(LH)	A2&!B1&!B2&C1&C2	0.0100	n/a	n/a	-0.0389
A1(LH)	A2&!B1&B2&!C1&!C2	0.0100	n/a	n/a	-0.0390
A1(LH)	A2&B1&!B2&!C1&!C2	0.0100	n/a	n/a	-0.0389
A1(LH)	A2&B1&B2&!C1&!C2	0.0100	n/a	n/a	-0.0389
A1(LH)	A2&!B1&B2&!C1&C2	0.0100	n/a	n/a	-0.0101
A1(LH)	A2&!B1&B2&C1&!C2	0.0100	n/a	n/a	-0.0101
A1(LH)	A2&!B1&B2&C1&C2	0.0100	n/a	n/a	-0.0101
A1(LH)	A2&B1&!B2&!C1&C2	0.0100	n/a	n/a	-0.0101
A1(LH)	A2&B1&!B2&C1&!C2	0.0100	n/a	n/a	-0.0101
A1(LH)	A2&B1&!B2&C1&C2	0.0100	n/a	n/a	-0.0101
A1(LH)	A2&B1&B2&!C1&C2	0.0100	n/a	n/a	-0.0101
A1(LH)	A2&B1&B2&C1&!C2	0.0100	n/a	n/a	-0.0101
A1(LH)	A2&B1&B2&C1&C2	0.0100	n/a	n/a	-0.0101
C1(LH)	!A1&!A2&!B1&!B2&!C2	0.0100	n/a	n/a	-0.0356
C1(LH)	!A1&!A2&!B1&!B2&C2	0.0100	n/a	n/a	-0.0345
C1(LH)	!A1&!A2&!B1&B2&!C2	0.0100	n/a	n/a	-0.0356
C1(LH)	!A1&!A2&!B1&B2&C2	0.0100	n/a	n/a	-0.0345
C1(LH)	!A1&!A2&B1&!B2&!C2	0.0100	n/a	n/a	-0.0356
C1(LH)	!A1&!A2&B1&!B2&C2	0.0100	n/a	n/a	-0.0345
C1(LH)	!A1&!A2&B1&B2&!C2	0.0100	n/a	n/a	-0.0356
C1(LH)	!A1&!A2&B1&B2&C2	0.0100	n/a	n/a	-0.0345
C1(LH)	!A1&A2&!B1&!B2&!C2	0.0100	n/a	n/a	-0.0357
C1(LH)	!A1&A2&!B1&!B2&C2	0.0100	n/a	n/a	-0.0345
C1(LH)	A1&!A2&!B1&!B2&!C2	0.0100	n/a	n/a	-0.0357
C1(LH)	A1&!A2&!B1&!B2&C2	0.0100	n/a	n/a	-0.0345
C1(LH)	A1&A2&!B1&!B2&!C2	0.0100	n/a	n/a	-0.0357
C1(LH)	A1&A2&!B1&!B2&C2	0.0100	n/a	n/a	-0.0345
C1(LH)	!A1&A2&!B1&B2&C2	0.0100	n/a	n/a	-0.0100
C1(LH)	!A1&A2&B1&!B2&C2	0.0100	n/a	n/a	-0.0100
C1(LH)	!A1&A2&B1&B2&C2	0.0100	n/a	n/a	-0.0100
C1(LH)	A1&!A2&!B1&B2&C2	0.0100	n/a	n/a	-0.0100
C1(LH)	A1&!A2&B1&!B2&C2	0.0100	n/a	n/a	-0.0100
C1(LH)	A1&!A2&B1&B2&C2	0.0100	n/a	n/a	-0.0100
C1(LH)	A1&A2&!B1&B2&C2	0.0100	n/a	n/a	-0.0100
C1(LH)	A1&A2&B1&!B2&C2	0.0100	n/a	n/a	-0.0100
C1(LH)	A1&A2&B1&B2&C2	0.0100	n/a	n/a	-0.0100
A2(HL)	!A1&!B1&!B2&!C1&!C2	0.0100	n/a	n/a	0.0400
A2(HL)	!A1&!B1&!B2&!C1&C2	0.0100	n/a	n/a	0.0399
A2(HL)	!A1&!B1&!B2&C1&!C2	0.0100	n/a	n/a	0.0400
A2(HL)	!A1&!B1&!B2&C1&C2	0.0100	n/a	n/a	0.0399
A2(HL)	!A1&!B1&B2&!C1&!C2	0.0100	n/a	n/a	0.0400
A2(HL)	!A1&B1&!B2&!C1&!C2	0.0100	n/a	n/a	0.0400
A2(HL)	!A1&B1&B2&!C1&!C2	0.0100	n/a	n/a	0.0400
A2(HL)	A1&!B1&!B2&!C1&!C2	0.0100	n/a	n/a	0.0404
A2(HL)	A1&!B1&!B2&!C1&C2	0.0100	n/a	n/a	0.0405
A2(HL)	A1&!B1&!B2&C1&!C2	0.0100	n/a	n/a	0.0405
A2(HL)	A1&!B1&!B2&C1&C2	0.0100	n/a	n/a	0.0405
A2(HL)	A1&!B1&B2&!C1&!C2	0.0100	n/a	n/a	0.0406
A2(HL)	A1&B1&!B2&!C1&!C2	0.0100	n/a	n/a	0.0406
A2(HL)	A1&B1&B2&!C1&!C2	0.0100	n/a	n/a	0.0405

continues on next page

Table 86 – continued from previous page

A2(HL)	A1&!B1&B2&!C1&C2	0.0100	n/a	n/a	0.0352
A2(HL)	A1&!B1&B2&C1&!C2	0.0100	n/a	n/a	0.0352
A2(HL)	A1&!B1&B2&C1&C2	0.0100	n/a	n/a	0.0352
A2(HL)	A1&B1&!B2&!C1&C2	0.0100	n/a	n/a	0.0352
A2(HL)	A1&B1&!B2&C1&!C2	0.0100	n/a	n/a	0.0352
A2(HL)	A1&B1&!B2&C1&C2	0.0100	n/a	n/a	0.0352
A2(HL)	A1&B1&B2&!C1&C2	0.0100	n/a	n/a	0.0352
A2(HL)	A1&B1&B2&C1&!C2	0.0100	n/a	n/a	0.0352
A2(HL)	A1&B1&B2&C1&C2	0.0100	n/a	n/a	0.0352
B1(HL)	!A1&!A2&!B2&!C1&!C2	0.0100	n/a	n/a	0.0460
B1(HL)	!A1&!A2&!B2&!C1&C2	0.0100	n/a	n/a	0.0419
B1(HL)	!A1&!A2&!B2&C1&!C2	0.0100	n/a	n/a	0.0419
B1(HL)	!A1&!A2&!B2&C1&C2	0.0100	n/a	n/a	0.0410
B1(HL)	!A1&!A2&B2&!C1&!C2	0.0100	n/a	n/a	0.0470
B1(HL)	!A1&!A2&B2&!C1&C2	0.0100	n/a	n/a	0.0355
B1(HL)	!A1&!A2&B2&C1&!C2	0.0100	n/a	n/a	0.0355
B1(HL)	!A1&!A2&B2&C1&C2	0.0100	n/a	n/a	0.0356
B1(HL)	!A1&A2&!B2&!C1&!C2	0.0100	n/a	n/a	0.0369
B1(HL)	!A1&A2&B2&!C1&!C2	0.0100	n/a	n/a	0.0377
B1(HL)	A1&!A2&!B2&!C1&!C2	0.0100	n/a	n/a	0.0369
B1(HL)	A1&!A2&B2&!C1&!C2	0.0100	n/a	n/a	0.0377
B1(HL)	A1&A2&!B2&!C1&!C2	0.0100	n/a	n/a	0.0368
B1(HL)	A1&A2&B2&!C1&!C2	0.0100	n/a	n/a	0.0376
B1(HL)	!A1&A2&B2&!C1&C2	0.0100	n/a	n/a	0.0256
B1(HL)	!A1&A2&B2&C1&!C2	0.0100	n/a	n/a	0.0256
B1(HL)	!A1&A2&B2&C1&C2	0.0100	n/a	n/a	0.0256
B1(HL)	A1&!A2&B2&!C1&C2	0.0100	n/a	n/a	0.0256
B1(HL)	A1&!A2&B2&C1&!C2	0.0100	n/a	n/a	0.0256
B1(HL)	A1&!A2&B2&C1&C2	0.0100	n/a	n/a	0.0256
B1(HL)	A1&A2&B2&!C1&C2	0.0100	n/a	n/a	0.0256
B1(HL)	A1&A2&B2&C1&!C2	0.0100	n/a	n/a	0.0256
B1(HL)	A1&A2&B2&C1&C2	0.0100	n/a	n/a	0.0256
C1(HL)	!A1&!A2&!B1&!B2&!C2	0.0100	n/a	n/a	0.0356
C1(HL)	!A1&!A2&!B1&!B2&C2	0.0100	n/a	n/a	0.0355
C1(HL)	!A1&!A2&!B1&B2&!C2	0.0100	n/a	n/a	0.0357
C1(HL)	!A1&!A2&!B1&B2&C2	0.0100	n/a	n/a	0.0356
C1(HL)	!A1&!A2&B1&!B2&!C2	0.0100	n/a	n/a	0.0357
C1(HL)	!A1&!A2&B1&!B2&C2	0.0100	n/a	n/a	0.0356
C1(HL)	!A1&!A2&B1&B2&!C2	0.0100	n/a	n/a	0.0357
C1(HL)	!A1&!A2&B1&B2&C2	0.0100	n/a	n/a	0.0356
C1(HL)	!A1&A2&!B1&!B2&!C2	0.0100	n/a	n/a	0.0359
C1(HL)	!A1&A2&!B1&!B2&C2	0.0100	n/a	n/a	0.0356
C1(HL)	A1&!A2&!B1&!B2&!C2	0.0100	n/a	n/a	0.0359
C1(HL)	A1&!A2&!B1&!B2&C2	0.0100	n/a	n/a	0.0356
C1(HL)	A1&A2&!B1&!B2&!C2	0.0100	n/a	n/a	0.0359
C1(HL)	A1&A2&!B1&!B2&C2	0.0100	n/a	n/a	0.0356
C1(HL)	!A1&A2&!B1&B2&C2	0.0100	n/a	n/a	0.0239
C1(HL)	!A1&A2&B1&!B2&C2	0.0100	n/a	n/a	0.0239
C1(HL)	!A1&A2&B1&B2&C2	0.0100	n/a	n/a	0.0239
C1(HL)	A1&!A2&!B1&B2&C2	0.0100	n/a	n/a	0.0239
C1(HL)	A1&!A2&B1&!B2&C2	0.0100	n/a	n/a	0.0239
C1(HL)	A1&!A2&B1&B2&C2	0.0100	n/a	n/a	0.0239

continues on next page

Table 86 – continued from previous page

C1(HL)	A1&A2&!B1&B2&C2	0.0100	n/a	n/a	0.0239
C1(HL)	A1&A2&B1&!B2&C2	0.0100	n/a	n/a	0.0239
C1(HL)	A1&A2&B1&B2&C2	0.0100	n/a	n/a	0.0239
A1(HL)	!A2&!B1&!B2&!C1&!C2	0.0100	n/a	n/a	0.0401
A1(HL)	!A2&!B1&!B2&!C1&C2	0.0100	n/a	n/a	0.0401
A1(HL)	!A2&!B1&!B2&C1&!C2	0.0100	n/a	n/a	0.0401
A1(HL)	!A2&!B1&!B2&C1&C2	0.0100	n/a	n/a	0.0401
A1(HL)	!A2&!B1&B2&!C1&!C2	0.0100	n/a	n/a	0.0401
A1(HL)	!A2&B1&!B2&!C1&!C2	0.0100	n/a	n/a	0.0401
A1(HL)	!A2&B1&B2&!C1&!C2	0.0100	n/a	n/a	0.0401
A1(HL)	A2&!B1&!B2&!C1&!C2	0.0100	n/a	n/a	0.0406
A1(HL)	A2&!B1&!B2&!C1&C2	0.0100	n/a	n/a	0.0406
A1(HL)	A2&!B1&!B2&C1&!C2	0.0100	n/a	n/a	0.0406
A1(HL)	A2&!B1&!B2&C1&C2	0.0100	n/a	n/a	0.0406
A1(HL)	A2&!B1&B2&!C1&!C2	0.0100	n/a	n/a	0.0408
A1(HL)	A2&B1&!B2&!C1&!C2	0.0100	n/a	n/a	0.0408
A1(HL)	A2&B1&B2&!C1&!C2	0.0100	n/a	n/a	0.0407
A1(HL)	A2&!B1&B2&!C1&C2	0.0100	n/a	n/a	0.0276
A1(HL)	A2&!B1&B2&C1&!C2	0.0100	n/a	n/a	0.0276
A1(HL)	A2&!B1&B2&C1&C2	0.0100	n/a	n/a	0.0276
A1(HL)	A2&B1&!B2&!C1&C2	0.0100	n/a	n/a	0.0276
A1(HL)	A2&B1&!B2&C1&!C2	0.0100	n/a	n/a	0.0276
A1(HL)	A2&B1&!B2&C1&C2	0.0100	n/a	n/a	0.0276
A1(HL)	A2&B1&B2&!C1&C2	0.0100	n/a	n/a	0.0276
A1(HL)	A2&B1&B2&C1&!C2	0.0100	n/a	n/a	0.0276
A1(HL)	A2&B1&B2&C1&C2	0.0100	n/a	n/a	0.0276
B1(LH)	!A1&!A2&!B2&!C1&!C2	0.0100	n/a	n/a	-0.0357
B1(LH)	!A1&!A2&!B2&!C1&C2	0.0100	n/a	n/a	-0.0356
B1(LH)	!A1&!A2&!B2&C1&!C2	0.0100	n/a	n/a	-0.0356
B1(LH)	!A1&!A2&!B2&C1&C2	0.0100	n/a	n/a	-0.0356
B1(LH)	!A1&!A2&B2&!C1&!C2	0.0100	n/a	n/a	-0.0345
B1(LH)	!A1&!A2&B2&!C1&C2	0.0100	n/a	n/a	-0.0345
B1(LH)	!A1&!A2&B2&C1&!C2	0.0100	n/a	n/a	-0.0345
B1(LH)	!A1&!A2&B2&C1&C2	0.0100	n/a	n/a	-0.0345
B1(LH)	!A1&A2&!B2&!C1&!C2	0.0100	n/a	n/a	0.0120
B1(LH)	!A1&A2&B2&!C1&!C2	0.0100	n/a	n/a	-0.0345
B1(LH)	A1&!A2&!B2&!C1&!C2	0.0100	n/a	n/a	0.0120
B1(LH)	A1&!A2&B2&!C1&!C2	0.0100	n/a	n/a	-0.0345
B1(LH)	A1&A2&!B2&!C1&!C2	0.0100	n/a	n/a	0.0121
B1(LH)	A1&A2&B2&!C1&!C2	0.0100	n/a	n/a	-0.0345
B1(LH)	!A1&A2&B2&!C1&C2	0.0100	n/a	n/a	-0.0100
B1(LH)	!A1&A2&B2&C1&!C2	0.0100	n/a	n/a	-0.0100
B1(LH)	!A1&A2&B2&C1&C2	0.0100	n/a	n/a	-0.0101
B1(LH)	A1&!A2&B2&!C1&C2	0.0100	n/a	n/a	-0.0100
B1(LH)	A1&!A2&B2&C1&!C2	0.0100	n/a	n/a	-0.0100
B1(LH)	A1&!A2&B2&C1&C2	0.0100	n/a	n/a	-0.0100
B1(LH)	A1&A2&B2&!C1&C2	0.0100	n/a	n/a	-0.0100
B1(LH)	A1&A2&B2&C1&!C2	0.0100	n/a	n/a	-0.0100
B1(LH)	A1&A2&B2&C1&C2	0.0100	n/a	n/a	-0.0101

LEAKAGE POWER

When Condition	Power (nW)
!A1&!A2&!B1&!B2&!C1&!C2	0.1004
!A1&!A2&!B1&!B2&!C1&C2	0.1004
!A1&!A2&!B1&!B2&C1&!C2	0.1004
!A1&!A2&!B1&!B2&C1&C2	0.1004
!A1&!A2&!B1&B2&!C1&!C2	0.1006
!A1&!A2&!B1&B2&!C1&C2	0.1009
!A1&!A2&!B1&B2&C1&!C2	0.1009
!A1&!A2&!B1&B2&C1&C2	0.1009
!A1&!A2&B1&!B2&!C1&!C2	0.1006
!A1&!A2&B1&!B2&!C1&C2	0.1009
!A1&!A2&B1&!B2&C1&!C2	0.1009
!A1&!A2&B1&!B2&C1&C2	0.1009
!A1&!A2&B1&B2&!C1&!C2	0.1006
!A1&!A2&B1&B2&!C1&C2	0.1009
!A1&!A2&B1&B2&C1&!C2	0.1009
!A1&!A2&B1&B2&C1&C2	0.1009
!A1&A2&!B1&!B2&!C1&!C2	0.1800
!A1&A2&!B1&!B2&!C1&C2	0.1803
!A1&A2&!B1&!B2&C1&!C2	0.1803
!A1&A2&!B1&!B2&C1&C2	0.1803
!A1&A2&!B1&B2&!C1&!C2	0.2583
!A1&A2&B1&!B2&!C1&!C2	0.2583
!A1&A2&B1&B2&!C1&!C2	0.2586
A1&!A2&!B1&!B2&!C1&!C2	0.1800
A1&!A2&!B1&!B2&!C1&C2	0.1803
A1&!A2&!B1&!B2&C1&!C2	0.1803
A1&!A2&!B1&!B2&C1&C2	0.1803
A1&!A2&!B1&B2&!C1&!C2	0.2582
A1&!A2&B1&!B2&!C1&!C2	0.2583
A1&!A2&B1&B2&!C1&!C2	0.2586
A1&A2&!B1&!B2&!C1&!C2	0.1804
A1&A2&!B1&!B2&!C1&C2	0.1807
A1&A2&!B1&!B2&C1&!C2	0.1807
A1&A2&!B1&!B2&C1&C2	0.1807
A1&A2&!B1&B2&!C1&!C2	0.2587
A1&A2&B1&!B2&!C1&!C2	0.2587
A1&A2&B1&B2&!C1&!C2	0.2591
!A1&A2&!B1&B2&!C1&C2	0.2363
!A1&A2&!B1&B2&C1&!C2	0.2006
!A1&A2&!B1&B2&C1&C2	0.2006
!A1&A2&B1&!B2&!C1&C2	0.2006
!A1&A2&B1&!B2&C1&!C2	0.1649
!A1&A2&B1&!B2&C1&C2	0.1649
!A1&A2&B1&B2&!C1&C2	0.2006
!A1&A2&B1&B2&C1&!C2	0.1649
!A1&A2&B1&B2&C1&C2	0.1649
A1&!A2&!B1&B2&!C1&C2	0.2006
A1&!A2&!B1&B2&C1&!C2	0.1649

continues on next page

Table 87 – continued from previous page

A1&!A2&!B1&B2&C1&C2	0.1649
A1&!A2&B1&!B2&!C1&C2	0.1649
A1&!A2&B1&!B2&C1&!C2	0.1293
A1&!A2&B1&!B2&C1&C2	0.1293
A1&!A2&B1&B2&!C1&C2	0.1649
A1&!A2&B1&B2&C1&!C2	0.1293
A1&!A2&B1&B2&C1&C2	0.1293
A1&A2&!B1&B2&!C1&C2	0.2006
A1&A2&!B1&B2&C1&!C2	0.1649
A1&A2&!B1&B2&C1&C2	0.1649
A1&A2&B1&!B2&!C1&C2	0.1649
A1&A2&B1&!B2&C1&!C2	0.1293
A1&A2&B1&!B2&C1&C2	0.1293
A1&A2&B1&B2&!C1&C2	0.1649
A1&A2&B1&B2&C1&!C2	0.1293
A1&A2&B1&B2&C1&C2	0.1293

gf180mcu_fd_sc_mcu7t5v0__oai222_2

gf180mcu_fd_sc_mcu7t5v0__oai222_2 symbol

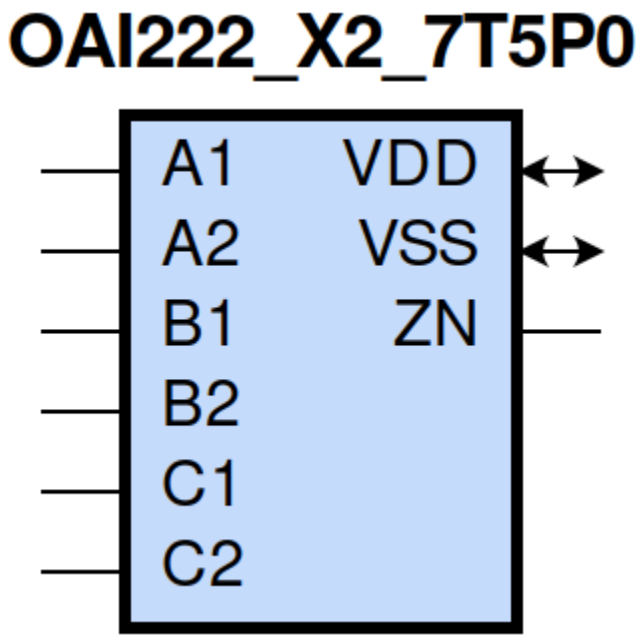

gf180mcu_fd_sc_mcu7t5v0__oai222_2 schematic

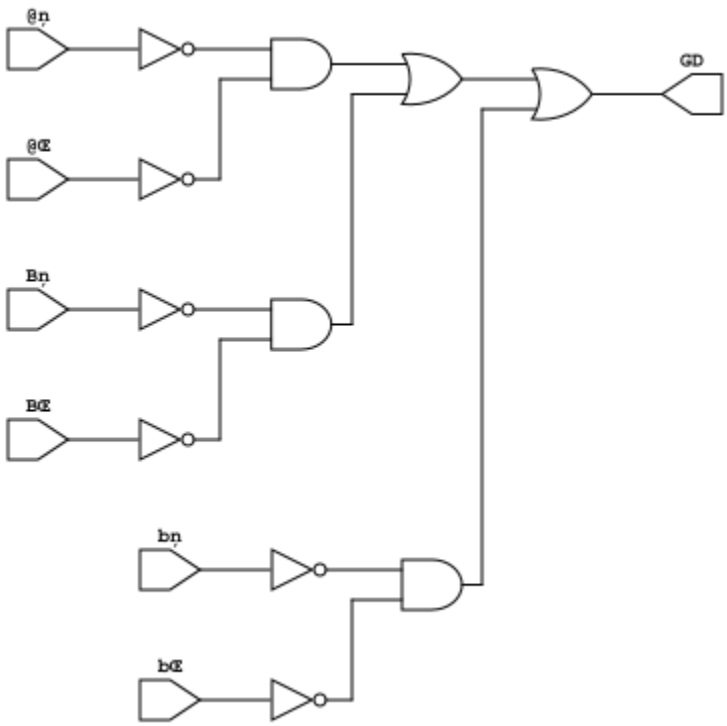

gf180mcu_fd_sc_mcu7t5v0__oai222_2 layout

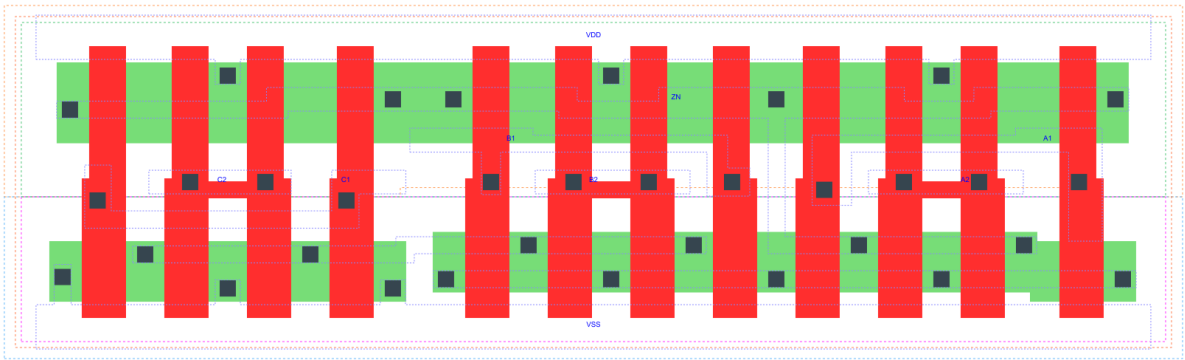

OAI222_X2 is a three 2-input OR into 3-input NAND, NAND[OR(A1,A2),OR(B1,B2),OR(C1,C2)], 2X drive strength

Attributes

Attribute	Value
area	59.270400 μm^2

OUTPUT FUNCTIONS

Output Pin	Function
ZN	(((!A1)&(!A2))|((!B1)&(!B2))|((!C1)&(!C2)))

TRUTH TABLE FOR ZN

A1	A2	B1	B2	C1	C2	ZN
0	0	?	?	?	?	1
?	?	0	0	?	?	1
?	?	?	?	0	0	1
1	?	1	?	1	?	0
1	?	1	?	?	1	0
1	?	?	1	1	?	0
1	?	?	1	?	1	0
?	1	1	?	1	?	0
?	1	1	?	?	1	0
?	1	?	1	1	?	0
?	1	?	1	?	1	0

FUNCTIONAL SCHEMATIC

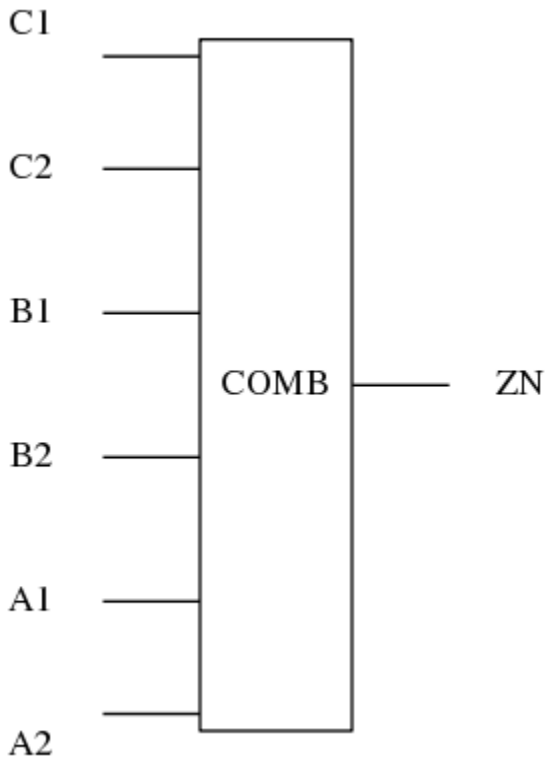

PIN CAPACITANCE (pf)

Pin	Type	Capacitance (pf)
C1	input	0.0095
C2	input	0.0085
B1	input	0.0096
B2	input	0.0085
A1	input	0.0097
A2	input	0.0087

DELAY AND OUTPUT TRANSITION TIME corresponding to min slew and load

Input Pin	Output	When Condition	Tin (ns)	Out Load (pf)	Delay (ns)	Tout (ns)
C1(LH)	ZN(HL)	!A1&A2&!B1&B2&!C2	0.0100	0.0010	0.2404	0.1239
C1(LH)	ZN(HL)	!A1&A2&B1&!B2&!C2	0.0100	0.0010	0.2082	0.1025
C1(LH)	ZN(HL)	!A1&A2&B1&B2&!C2	0.0100	0.0010	0.1878	0.0864
C1(LH)	ZN(HL)	A1&!A2&!B1&B2&!C2	0.0100	0.0010	0.2074	0.1020
C1(LH)	ZN(HL)	A1&!A2&B1&!B2&!C2	0.0100	0.0010	0.1764	0.0806

continues on next page

Table 88 – continued from previous page

C1(LH)	ZN(HL)	A1&!A2&B1&B2&!C2	0.0100	0.0010	0.1608	0.0684
C1(LH)	ZN(HL)	A1&A2&!B1&B2&!C2	0.0100	0.0010	0.1825	0.1019
C1(LH)	ZN(HL)	A1&A2&B1&!B2&!C2	0.0100	0.0010	0.1572	0.0834
C1(LH)	ZN(HL)	A1&A2&B1&B2&!C2	0.0100	0.0010	0.1375	0.0672
C1(HL)	ZN(LH)	!A1&A2&!B1&B2&!C2	0.0100	0.0010	0.3576	0.3610
C1(HL)	ZN(LH)	!A1&A2&B1&!B2&!C2	0.0100	0.0010	0.3392	0.3123
C1(HL)	ZN(LH)	!A1&A2&B1&B2&!C2	0.0100	0.0010	0.3598	0.3278
C1(HL)	ZN(LH)	A1&!A2&!B1&B2&!C2	0.0100	0.0010	0.3390	0.3103
C1(HL)	ZN(LH)	A1&!A2&B1&!B2&!C2	0.0100	0.0010	0.3221	0.2609
C1(HL)	ZN(LH)	A1&!A2&B1&B2&!C2	0.0100	0.0010	0.3420	0.2757
C1(HL)	ZN(LH)	A1&A2&!B1&B2&!C2	0.0100	0.0010	0.3702	0.3309
C1(HL)	ZN(LH)	A1&A2&B1&!B2&!C2	0.0100	0.0010	0.3547	0.2831
C1(HL)	ZN(LH)	A1&A2&B1&B2&!C2	0.0100	0.0010	0.3769	0.2992
C2(LH)	ZN(HL)	!A1&A2&!B1&B2&!C1	0.0100	0.0010	0.2710	0.1455
C2(LH)	ZN(HL)	!A1&A2&B1&!B2&!C1	0.0100	0.0010	0.2379	0.1242
C2(LH)	ZN(HL)	!A1&A2&B1&B2&!C1	0.0100	0.0010	0.2131	0.1039
C2(LH)	ZN(HL)	A1&!A2&!B1&B2&!C1	0.0100	0.0010	0.2368	0.1234
C2(LH)	ZN(HL)	A1&!A2&B1&!B2&!C1	0.0100	0.0010	0.2046	0.1022
C2(LH)	ZN(HL)	A1&!A2&B1&B2&!C1	0.0100	0.0010	0.1849	0.0864
C2(LH)	ZN(HL)	A1&A2&!B1&B2&!C1	0.0100	0.0010	0.2071	0.1201
C2(LH)	ZN(HL)	A1&A2&B1&!B2&!C1	0.0100	0.0010	0.1803	0.1023
C2(LH)	ZN(HL)	A1&A2&B1&B2&!C1	0.0100	0.0010	0.1556	0.0817
C2(HL)	ZN(LH)	!A1&A2&!B1&B2&!C1	0.0100	0.0010	0.3842	0.3612
C2(HL)	ZN(LH)	!A1&A2&B1&!B2&!C1	0.0100	0.0010	0.3658	0.3123
C2(HL)	ZN(LH)	!A1&A2&B1&B2&!C1	0.0100	0.0010	0.3864	0.3278
C2(HL)	ZN(LH)	A1&!A2&!B1&B2&!C1	0.0100	0.0010	0.3656	0.3104
C2(HL)	ZN(LH)	A1&!A2&B1&!B2&!C1	0.0100	0.0010	0.3490	0.2606
C2(HL)	ZN(LH)	A1&!A2&B1&B2&!C1	0.0100	0.0010	0.3689	0.2756
C2(HL)	ZN(LH)	A1&A2&!B1&B2&!C1	0.0100	0.0010	0.3968	0.3309
C2(HL)	ZN(LH)	A1&A2&B1&!B2&!C1	0.0100	0.0010	0.3813	0.2829
C2(HL)	ZN(LH)	A1&A2&B1&B2&!C1	0.0100	0.0010	0.4033	0.2993
B1(LH)	ZN(HL)	!A1&A2&!B2&!C1&C2	0.0100	0.0010	0.2133	0.1241
B1(LH)	ZN(HL)	!A1&A2&!B2&C1&!C2	0.0100	0.0010	0.1804	0.1026
B1(LH)	ZN(HL)	!A1&A2&!B2&C1&C2	0.0100	0.0010	0.1571	0.0846
B1(LH)	ZN(HL)	A1&!A2&!B2&!C1&C2	0.0100	0.0010	0.1797	0.1021
B1(LH)	ZN(HL)	A1&!A2&!B2&C1&!C2	0.0100	0.0010	0.1487	0.0808
B1(LH)	ZN(HL)	A1&!A2&!B2&C1&C2	0.0100	0.0010	0.1304	0.0660
B1(LH)	ZN(HL)	A1&A2&!B2&!C1&C2	0.0100	0.0010	0.1548	0.1022
B1(LH)	ZN(HL)	A1&A2&!B2&C1&!C2	0.0100	0.0010	0.1293	0.0835
B1(LH)	ZN(HL)	A1&A2&!B2&C1&C2	0.0100	0.0010	0.1114	0.0641
B1(HL)	ZN(LH)	!A1&A2&!B2&!C1&C2	0.0100	0.0010	0.2837	0.2969
B1(HL)	ZN(LH)	!A1&A2&!B2&C1&!C2	0.0100	0.0010	0.2687	0.2495
B1(HL)	ZN(LH)	!A1&A2&!B2&C1&C2	0.0100	0.0010	0.2673	0.2495
B1(HL)	ZN(LH)	A1&!A2&!B2&!C1&C2	0.0100	0.0010	0.2687	0.2485
B1(HL)	ZN(LH)	A1&!A2&!B2&C1&!C2	0.0100	0.0010	0.2556	0.2016
B1(HL)	ZN(LH)	A1&!A2&!B2&C1&C2	0.0100	0.0010	0.2543	0.2020
B1(HL)	ZN(LH)	A1&A2&!B2&!C1&C2	0.0100	0.0010	0.2946	0.2680
B1(HL)	ZN(LH)	A1&A2&!B2&C1&!C2	0.0100	0.0010	0.2820	0.2217
B1(HL)	ZN(LH)	A1&A2&!B2&C1&C2	0.0100	0.0010	0.2802	0.2217
B2(HL)	ZN(LH)	!A1&A2&!B1&!C1&C2	0.0100	0.0010	0.3097	0.2967
B2(HL)	ZN(LH)	!A1&A2&!B1&C1&!C2	0.0100	0.0010	0.2946	0.2494
B2(HL)	ZN(LH)	!A1&A2&!B1&C1&C2	0.0100	0.0010	0.2933	0.2494

continues on next page

Table 88 – continued from previous page

B2(HL)	ZN(LH)	A1&!A2&!B1&!C1&C2	0.0100	0.0010	0.2948	0.2485
B2(HL)	ZN(LH)	A1&!A2&!B1&C1&!C2	0.0100	0.0010	0.2816	0.2019
B2(HL)	ZN(LH)	A1&!A2&!B1&C1&C2	0.0100	0.0010	0.2803	0.2015
B2(HL)	ZN(LH)	A1&A2&!B1&!C1&C2	0.0100	0.0010	0.3206	0.2680
B2(HL)	ZN(LH)	A1&A2&!B1&C1&!C2	0.0100	0.0010	0.3080	0.2217
B2(HL)	ZN(LH)	A1&A2&!B1&C1&C2	0.0100	0.0010	0.3066	0.2217
B2(LH)	ZN(HL)	!A1&A2&!B1&!C1&C2	0.0100	0.0010	0.2432	0.1457
B2(LH)	ZN(HL)	!A1&A2&!B1&C1&!C2	0.0100	0.0010	0.2095	0.1238
B2(LH)	ZN(HL)	!A1&A2&!B1&C1&C2	0.0100	0.0010	0.1818	0.1024
B2(LH)	ZN(HL)	A1&!A2&!B1&!C1&C2	0.0100	0.0010	0.2090	0.1234
B2(LH)	ZN(HL)	A1&!A2&!B1&C1&!C2	0.0100	0.0010	0.1765	0.1021
B2(LH)	ZN(HL)	A1&!A2&!B1&C1&C2	0.0100	0.0010	0.1536	0.0840
B2(LH)	ZN(HL)	A1&A2&!B1&!C1&C2	0.0100	0.0010	0.1790	0.1203
B2(LH)	ZN(HL)	A1&A2&!B1&C1&!C2	0.0100	0.0010	0.1519	0.1019
B2(LH)	ZN(HL)	A1&A2&!B1&C1&C2	0.0100	0.0010	0.1292	0.0786
A1(HL)	ZN(LH)	!A2&!B1&B2&!C1&C2	0.0100	0.0010	0.1808	0.2154
A1(HL)	ZN(LH)	!A2&!B1&B2&C1&!C2	0.0100	0.0010	0.1693	0.1691
A1(HL)	ZN(LH)	!A2&!B1&B2&C1&C2	0.0100	0.0010	0.1694	0.1694
A1(HL)	ZN(LH)	!A2&B1&!B2&!C1&C2	0.0100	0.0010	0.1693	0.1700
A1(HL)	ZN(LH)	!A2&B1&!B2&C1&!C2	0.0100	0.0010	0.1594	0.1265
A1(HL)	ZN(LH)	!A2&B1&!B2&C1&C2	0.0100	0.0010	0.1592	0.1266
A1(HL)	ZN(LH)	!A2&B1&B2&!C1&C2	0.0100	0.0010	0.1684	0.1702
A1(HL)	ZN(LH)	!A2&B1&B2&C1&!C2	0.0100	0.0010	0.1584	0.1265
A1(HL)	ZN(LH)	!A2&B1&B2&C1&C2	0.0100	0.0010	0.1583	0.1265
A1(LH)	ZN(HL)	!A2&!B1&B2&!C1&C2	0.0100	0.0010	0.1560	0.1226
A1(LH)	ZN(HL)	!A2&!B1&B2&C1&!C2	0.0100	0.0010	0.1235	0.1003
A1(LH)	ZN(HL)	!A2&!B1&B2&C1&C2	0.0100	0.0010	0.1130	0.0836
A1(LH)	ZN(HL)	!A2&B1&!B2&!C1&C2	0.0100	0.0010	0.1237	0.1004
A1(LH)	ZN(HL)	!A2&B1&!B2&C1&!C2	0.0100	0.0010	0.0934	0.0766
A1(LH)	ZN(HL)	!A2&B1&!B2&C1&C2	0.0100	0.0010	0.0874	0.0648
A1(LH)	ZN(HL)	!A2&B1&B2&!C1&C2	0.0100	0.0010	0.1076	0.0828
A1(LH)	ZN(HL)	!A2&B1&B2&C1&!C2	0.0100	0.0010	0.0826	0.0629
A1(LH)	ZN(HL)	!A2&B1&B2&C1&C2	0.0100	0.0010	0.0767	0.0519
A2(HL)	ZN(LH)	!A1&!B1&B2&!C1&C2	0.0100	0.0010	0.2088	0.2151
A2(HL)	ZN(LH)	!A1&!B1&B2&C1&!C2	0.0100	0.0010	0.1971	0.1694
A2(HL)	ZN(LH)	!A1&!B1&B2&C1&C2	0.0100	0.0010	0.1971	0.1694
A2(HL)	ZN(LH)	!A1&B1&!B2&!C1&C2	0.0100	0.0010	0.1970	0.1701
A2(HL)	ZN(LH)	!A1&B1&!B2&C1&!C2	0.0100	0.0010	0.1871	0.1266
A2(HL)	ZN(LH)	!A1&B1&!B2&C1&C2	0.0100	0.0010	0.1870	0.1266
A2(HL)	ZN(LH)	!A1&B1&B2&!C1&C2	0.0100	0.0010	0.1961	0.1701
A2(HL)	ZN(LH)	!A1&B1&B2&C1&!C2	0.0100	0.0010	0.1865	0.1266
A2(HL)	ZN(LH)	!A1&B1&B2&C1&C2	0.0100	0.0010	0.1864	0.1266
A2(LH)	ZN(HL)	!A1&!B1&B2&!C1&C2	0.0100	0.0010	0.1873	0.1454
A2(LH)	ZN(HL)	!A1&!B1&B2&C1&!C2	0.0100	0.0010	0.1536	0.1232
A2(LH)	ZN(HL)	!A1&!B1&B2&C1&C2	0.0100	0.0010	0.1388	0.1024
A2(LH)	ZN(HL)	!A1&B1&!B2&!C1&C2	0.0100	0.0010	0.1541	0.1235
A2(LH)	ZN(HL)	!A1&B1&!B2&C1&!C2	0.0100	0.0010	0.1214	0.1011
A2(LH)	ZN(HL)	!A1&B1&!B2&C1&C2	0.0100	0.0010	0.1112	0.0845
A2(LH)	ZN(HL)	!A1&B1&B2&!C1&C2	0.0100	0.0010	0.1331	0.1026
A2(LH)	ZN(HL)	!A1&B1&B2&C1&!C2	0.0100	0.0010	0.1056	0.0838
A2(LH)	ZN(HL)	!A1&B1&B2&C1&C2	0.0100	0.0010	0.0956	0.0676

DYNAMIC ENERGY

Input Pin	When Condition	Tin (ns)	Output	Out Load (pf)	Energy (uW/MHz)
A1	!A2&!B1&B2&!C1&C2	0.0100	ZN(LH)	0.0010	0.4213
A1	!A2&!B1&B2&C1&!C2	0.0100	ZN(LH)	0.0010	0.3677
A1	!A2&!B1&B2&C1&C2	0.0100	ZN(LH)	0.0010	0.3678
A1	!A2&B1&!B2&!C1&C2	0.0100	ZN(LH)	0.0010	0.3681
A1	!A2&B1&!B2&C1&!C2	0.0100	ZN(LH)	0.0010	0.3144
A1	!A2&B1&!B2&C1&C2	0.0100	ZN(LH)	0.0010	0.3144
A1	!A2&B1&B2&!C1&C2	0.0100	ZN(LH)	0.0010	0.3667
A1	!A2&B1&B2&C1&!C2	0.0100	ZN(LH)	0.0010	0.3132
A1	!A2&B1&B2&C1&C2	0.0100	ZN(LH)	0.0010	0.3130
B2	!A1&A2&!B1&!C1&C2	0.0100	ZN(LH)	0.0010	0.6763
B2	!A1&A2&!B1&C1&!C2	0.0100	ZN(LH)	0.0010	0.6228
B2	!A1&A2&!B1&C1&C2	0.0100	ZN(LH)	0.0010	0.6209
B2	A1&!A2&!B1&!C1&C2	0.0100	ZN(LH)	0.0010	0.6227
B2	A1&!A2&!B1&C1&!C2	0.0100	ZN(LH)	0.0010	0.5688
B2	A1&!A2&!B1&C1&C2	0.0100	ZN(LH)	0.0010	0.5671
B2	A1&A2&!B1&!C1&C2	0.0100	ZN(LH)	0.0010	0.6678
B2	A1&A2&!B1&C1&!C2	0.0100	ZN(LH)	0.0010	0.6142
B2	A1&A2&!B1&C1&C2	0.0100	ZN(LH)	0.0010	0.6122
B1	!A1&A2&!B2&!C1&C2	0.0100	ZN(HL)	0.0010	0.1744
B1	!A1&A2&!B2&C1&!C2	0.0100	ZN(HL)	0.0010	0.1245
B1	!A1&A2&!B2&C1&C2	0.0100	ZN(HL)	0.0010	0.1245
B1	A1&!A2&!B2&!C1&C2	0.0100	ZN(HL)	0.0010	0.1226
B1	A1&!A2&!B2&C1&!C2	0.0100	ZN(HL)	0.0010	0.0728
B1	A1&!A2&!B2&C1&C2	0.0100	ZN(HL)	0.0010	0.0726
B1	A1&A2&!B2&!C1&C2	0.0100	ZN(HL)	0.0010	0.1227
B1	A1&A2&!B2&C1&!C2	0.0100	ZN(HL)	0.0010	0.0727
B1	A1&A2&!B2&C1&C2	0.0100	ZN(HL)	0.0010	0.0726
A2	!A1&!B1&B2&!C1&C2	0.0100	ZN(LH)	0.0010	0.4758
A2	!A1&!B1&B2&C1&!C2	0.0100	ZN(LH)	0.0010	0.4221
A2	!A1&!B1&B2&C1&C2	0.0100	ZN(LH)	0.0010	0.4221
A2	!A1&B1&!B2&!C1&C2	0.0100	ZN(LH)	0.0010	0.4224
A2	!A1&B1&!B2&C1&!C2	0.0100	ZN(LH)	0.0010	0.3687
A2	!A1&B1&!B2&C1&C2	0.0100	ZN(LH)	0.0010	0.3686
A2	!A1&B1&B2&!C1&C2	0.0100	ZN(LH)	0.0010	0.4210
A2	!A1&B1&B2&C1&!C2	0.0100	ZN(LH)	0.0010	0.3675
A2	!A1&B1&B2&C1&C2	0.0100	ZN(LH)	0.0010	0.3673
B1	!A1&A2&!B2&!C1&C2	0.0100	ZN(LH)	0.0010	0.6229
B1	!A1&A2&!B2&C1&!C2	0.0100	ZN(LH)	0.0010	0.5693
B1	!A1&A2&!B2&C1&C2	0.0100	ZN(LH)	0.0010	0.5673
B1	A1&!A2&!B2&!C1&C2	0.0100	ZN(LH)	0.0010	0.5691
B1	A1&!A2&!B2&C1&!C2	0.0100	ZN(LH)	0.0010	0.5154
B1	A1&!A2&!B2&C1&C2	0.0100	ZN(LH)	0.0010	0.5134
B1	A1&A2&!B2&!C1&C2	0.0100	ZN(LH)	0.0010	0.6143
B1	A1&A2&!B2&C1&!C2	0.0100	ZN(LH)	0.0010	0.5605
B1	A1&A2&!B2&C1&C2	0.0100	ZN(LH)	0.0010	0.5589
C1	!A1&A2&!B1&B2&!C2	0.0100	ZN(HL)	0.0010	0.1731
C1	!A1&A2&B1&!B2&!C2	0.0100	ZN(HL)	0.0010	0.1247

continues on next page

Table 89 – continued from previous page

C1	!A1&A2&B1&B2&!C2	0.0100	ZN(HL)	0.0010	0.1246
C1	A1&!A2&!B1&B2&!C2	0.0100	ZN(HL)	0.0010	0.1213
C1	A1&!A2&B1&!B2&!C2	0.0100	ZN(HL)	0.0010	0.0729
C1	A1&!A2&B1&B2&!C2	0.0100	ZN(HL)	0.0010	0.0727
C1	A1&A2&!B1&B2&!C2	0.0100	ZN(HL)	0.0010	0.1212
C1	A1&A2&B1&!B2&!C2	0.0100	ZN(HL)	0.0010	0.0729
C1	A1&A2&B1&B2&!C2	0.0100	ZN(HL)	0.0010	0.0728
A2	!A1&!B1&B2&!C1&C2	0.0100	ZN(HL)	0.0010	0.2165
A2	!A1&!B1&B2&C1&!C2	0.0100	ZN(HL)	0.0010	0.1668
A2	!A1&!B1&B2&C1&C2	0.0100	ZN(HL)	0.0010	0.1667
A2	!A1&B1&!B2&!C1&C2	0.0100	ZN(HL)	0.0010	0.1684
A2	!A1&B1&!B2&C1&!C2	0.0100	ZN(HL)	0.0010	0.1189
A2	!A1&B1&!B2&C1&C2	0.0100	ZN(HL)	0.0010	0.1188
A2	!A1&B1&B2&!C1&C2	0.0100	ZN(HL)	0.0010	0.1684
A2	!A1&B1&B2&C1&!C2	0.0100	ZN(HL)	0.0010	0.1189
A2	!A1&B1&B2&C1&C2	0.0100	ZN(HL)	0.0010	0.1187
C2	!A1&A2&!B1&B2&!C1	0.0100	ZN(HL)	0.0010	0.2158
C2	!A1&A2&B1&!B2&!C1	0.0100	ZN(HL)	0.0010	0.1677
C2	!A1&A2&B1&B2&!C1	0.0100	ZN(HL)	0.0010	0.1676
C2	A1&!A2&!B1&B2&!C1	0.0100	ZN(HL)	0.0010	0.1641
C2	A1&!A2&B1&!B2&!C1	0.0100	ZN(HL)	0.0010	0.1161
C2	A1&!A2&B1&B2&!C1	0.0100	ZN(HL)	0.0010	0.1163
C2	A1&A2&!B1&B2&!C1	0.0100	ZN(HL)	0.0010	0.1640
C2	A1&A2&B1&!B2&!C1	0.0100	ZN(HL)	0.0010	0.1162
C2	A1&A2&B1&B2&!C1	0.0100	ZN(HL)	0.0010	0.1161
C1	!A1&A2&!B1&B2&!C2	0.0100	ZN(LH)	0.0010	0.7853
C1	!A1&A2&B1&!B2&!C2	0.0100	ZN(LH)	0.0010	0.7318
C1	!A1&A2&B1&B2&!C2	0.0100	ZN(LH)	0.0010	0.7754
C1	A1&!A2&!B1&B2&!C2	0.0100	ZN(LH)	0.0010	0.7315
C1	A1&!A2&B1&!B2&!C2	0.0100	ZN(LH)	0.0010	0.6782
C1	A1&!A2&B1&B2&!C2	0.0100	ZN(LH)	0.0010	0.7218
C1	A1&A2&!B1&B2&!C2	0.0100	ZN(LH)	0.0010	0.7757
C1	A1&A2&B1&!B2&!C2	0.0100	ZN(LH)	0.0010	0.7224
C1	A1&A2&B1&B2&!C2	0.0100	ZN(LH)	0.0010	0.7662
C2	!A1&A2&!B1&B2&!C1	0.0100	ZN(LH)	0.0010	0.8388
C2	!A1&A2&B1&!B2&!C1	0.0100	ZN(LH)	0.0010	0.7856
C2	!A1&A2&B1&B2&!C1	0.0100	ZN(LH)	0.0010	0.8290
C2	A1&!A2&!B1&B2&!C1	0.0100	ZN(LH)	0.0010	0.7852
C2	A1&!A2&B1&!B2&!C1	0.0100	ZN(LH)	0.0010	0.7319
C2	A1&!A2&B1&B2&!C1	0.0100	ZN(LH)	0.0010	0.7754
C2	A1&A2&!B1&B2&!C1	0.0100	ZN(LH)	0.0010	0.8293
C2	A1&A2&B1&!B2&!C1	0.0100	ZN(LH)	0.0010	0.7759
C2	A1&A2&B1&B2&!C1	0.0100	ZN(LH)	0.0010	0.8197
A1	!A2&!B1&B2&!C1&C2	0.0100	ZN(HL)	0.0010	0.1714
A1	!A2&!B1&B2&C1&!C2	0.0100	ZN(HL)	0.0010	0.1215
A1	!A2&!B1&B2&C1&C2	0.0100	ZN(HL)	0.0010	0.1215
A1	!A2&B1&!B2&!C1&C2	0.0100	ZN(HL)	0.0010	0.1231
A1	!A2&B1&!B2&C1&!C2	0.0100	ZN(HL)	0.0010	0.0732
A1	!A2&B1&!B2&C1&C2	0.0100	ZN(HL)	0.0010	0.0732
A1	!A2&B1&B2&!C1&C2	0.0100	ZN(HL)	0.0010	0.1230
A1	!A2&B1&B2&C1&!C2	0.0100	ZN(HL)	0.0010	0.0732
A1	!A2&B1&B2&C1&C2	0.0100	ZN(HL)	0.0010	0.0730

continues on next page

Table 89 – continued from previous page

B2	!A1&A2&!B1&!C1&C2	0.0100	ZN(HL)	0.0010	0.2156
B2	!A1&A2&!B1&C1&!C2	0.0100	ZN(HL)	0.0010	0.1658
B2	!A1&A2&!B1&C1&C2	0.0100	ZN(HL)	0.0010	0.1658
B2	A1&!A2&!B1&!C1&C2	0.0100	ZN(HL)	0.0010	0.1638
B2	A1&!A2&!B1&C1&!C2	0.0100	ZN(HL)	0.0010	0.1145
B2	A1&!A2&!B1&C1&C2	0.0100	ZN(HL)	0.0010	0.1145
B2	A1&A2&!B1&!C1&C2	0.0100	ZN(HL)	0.0010	0.1639
B2	A1&A2&!B1&C1&!C2	0.0100	ZN(HL)	0.0010	0.1143
B2	A1&A2&!B1&C1&C2	0.0100	ZN(HL)	0.0010	0.1143
B2(LH)	!A1&!A2&!B1&!C1&!C2	0.0100	n/a	n/a	-0.0702
B2(LH)	!A1&!A2&!B1&!C1&C2	0.0100	n/a	n/a	-0.0703
B2(LH)	!A1&!A2&!B1&C1&!C2	0.0100	n/a	n/a	-0.0703
B2(LH)	!A1&!A2&!B1&C1&C2	0.0100	n/a	n/a	-0.0703
B2(LH)	!A1&!A2&B1&!C1&!C2	0.0100	n/a	n/a	-0.0681
B2(LH)	!A1&!A2&B1&!C1&C2	0.0100	n/a	n/a	-0.0681
B2(LH)	!A1&!A2&B1&C1&!C2	0.0100	n/a	n/a	-0.0681
B2(LH)	!A1&!A2&B1&C1&C2	0.0100	n/a	n/a	-0.0681
B2(LH)	!A1&A2&!B1&!C1&!C2	0.0100	n/a	n/a	0.0294
B2(LH)	!A1&A2&B1&!C1&!C2	0.0100	n/a	n/a	-0.0681
B2(LH)	A1&!A2&!B1&!C1&!C2	0.0100	n/a	n/a	0.0293
B2(LH)	A1&!A2&B1&!C1&!C2	0.0100	n/a	n/a	-0.0681
B2(LH)	A1&A2&!B1&!C1&!C2	0.0100	n/a	n/a	0.0295
B2(LH)	A1&A2&B1&!C1&!C2	0.0100	n/a	n/a	-0.0681
B2(LH)	!A1&A2&B1&!C1&C2	0.0100	n/a	n/a	-0.0587
B2(LH)	!A1&A2&B1&C1&!C2	0.0100	n/a	n/a	-0.0587
B2(LH)	!A1&A2&B1&C1&C2	0.0100	n/a	n/a	-0.0587
B2(LH)	A1&!A2&B1&!C1&C2	0.0100	n/a	n/a	-0.0587
B2(LH)	A1&!A2&B1&C1&!C2	0.0100	n/a	n/a	-0.0587
B2(LH)	A1&!A2&B1&C1&C2	0.0100	n/a	n/a	-0.0587
B2(LH)	A1&A2&B1&!C1&C2	0.0100	n/a	n/a	-0.0587
B2(LH)	A1&A2&B1&C1&!C2	0.0100	n/a	n/a	-0.0587
B2(LH)	A1&A2&B1&C1&C2	0.0100	n/a	n/a	-0.0587
C2(HL)	!A1&!A2&!B1&!B2&!C1	0.0100	n/a	n/a	0.0706
C2(HL)	!A1&!A2&!B1&!B2&C1	0.0100	n/a	n/a	0.0704
C2(HL)	!A1&!A2&!B1&B2&!C1	0.0100	n/a	n/a	0.0709
C2(HL)	!A1&!A2&!B1&B2&C1	0.0100	n/a	n/a	0.0704
C2(HL)	!A1&!A2&B1&!B2&!C1	0.0100	n/a	n/a	0.0709
C2(HL)	!A1&!A2&B1&!B2&C1	0.0100	n/a	n/a	0.0704
C2(HL)	!A1&!A2&B1&B2&!C1	0.0100	n/a	n/a	0.0708
C2(HL)	!A1&!A2&B1&B2&C1	0.0100	n/a	n/a	0.0704
C2(HL)	!A1&A2&!B1&!B2&!C1	0.0100	n/a	n/a	0.0716
C2(HL)	!A1&A2&!B1&!B2&C1	0.0100	n/a	n/a	0.0704
C2(HL)	A1&!A2&!B1&!B2&!C1	0.0100	n/a	n/a	0.0716
C2(HL)	A1&!A2&!B1&!B2&C1	0.0100	n/a	n/a	0.0704
C2(HL)	A1&A2&!B1&!B2&!C1	0.0100	n/a	n/a	0.0715
C2(HL)	A1&A2&!B1&!B2&C1	0.0100	n/a	n/a	0.0704
C2(HL)	!A1&A2&!B1&B2&C1	0.0100	n/a	n/a	0.0704
C2(HL)	!A1&A2&B1&!B2&C1	0.0100	n/a	n/a	0.0704
C2(HL)	!A1&A2&B1&B2&C1	0.0100	n/a	n/a	0.0704
C2(HL)	A1&!A2&!B1&B2&C1	0.0100	n/a	n/a	0.0703
C2(HL)	A1&!A2&B1&!B2&C1	0.0100	n/a	n/a	0.0703
C2(HL)	A1&!A2&B1&B2&C1	0.0100	n/a	n/a	0.0704

continues on next page

Table 89 – continued from previous page

C2(HL)	A1&A2&!B1&B2&C1	0.0100	n/a	n/a	0.0703
C2(HL)	A1&A2&B1&!B2&C1	0.0100	n/a	n/a	0.0703
C2(HL)	A1&A2&B1&B2&C1	0.0100	n/a	n/a	0.0704
B2(HL)	!A1&!A2&!B1&!C1&!C2	0.0100	n/a	n/a	0.0923
B2(HL)	!A1&!A2&!B1&!C1&C2	0.0100	n/a	n/a	0.0838
B2(HL)	!A1&!A2&!B1&C1&!C2	0.0100	n/a	n/a	0.0838
B2(HL)	!A1&!A2&!B1&C1&C2	0.0100	n/a	n/a	0.0821
B2(HL)	!A1&!A2&B1&!C1&!C2	0.0100	n/a	n/a	0.0945
B2(HL)	!A1&!A2&B1&!C1&C2	0.0100	n/a	n/a	0.0704
B2(HL)	!A1&!A2&B1&C1&!C2	0.0100	n/a	n/a	0.0704
B2(HL)	!A1&!A2&B1&C1&C2	0.0100	n/a	n/a	0.0704
B2(HL)	!A1&A2&!B1&!C1&!C2	0.0100	n/a	n/a	0.0735
B2(HL)	!A1&A2&B1&!C1&!C2	0.0100	n/a	n/a	0.0749
B2(HL)	A1&!A2&!B1&!C1&!C2	0.0100	n/a	n/a	0.0735
B2(HL)	A1&!A2&B1&!C1&!C2	0.0100	n/a	n/a	0.0749
B2(HL)	A1&A2&!B1&!C1&!C2	0.0100	n/a	n/a	0.0734
B2(HL)	A1&A2&B1&!C1&!C2	0.0100	n/a	n/a	0.0747
B2(HL)	!A1&A2&B1&!C1&C2	0.0100	n/a	n/a	0.0704
B2(HL)	!A1&A2&B1&C1&!C2	0.0100	n/a	n/a	0.0704
B2(HL)	!A1&A2&B1&C1&C2	0.0100	n/a	n/a	0.0703
B2(HL)	A1&!A2&B1&!C1&C2	0.0100	n/a	n/a	0.0704
B2(HL)	A1&!A2&B1&C1&!C2	0.0100	n/a	n/a	0.0704
B2(HL)	A1&!A2&B1&C1&C2	0.0100	n/a	n/a	0.0703
B2(HL)	A1&A2&B1&!C1&C2	0.0100	n/a	n/a	0.0703
B2(HL)	A1&A2&B1&C1&!C2	0.0100	n/a	n/a	0.0703
B2(HL)	A1&A2&B1&C1&C2	0.0100	n/a	n/a	0.0704
C2(LH)	!A1&!A2&!B1&!B2&!C1	0.0100	n/a	n/a	-0.0703
C2(LH)	!A1&!A2&!B1&!B2&C1	0.0100	n/a	n/a	-0.0680
C2(LH)	!A1&!A2&!B1&B2&!C1	0.0100	n/a	n/a	-0.0704
C2(LH)	!A1&!A2&!B1&B2&C1	0.0100	n/a	n/a	-0.0680
C2(LH)	!A1&!A2&B1&!B2&!C1	0.0100	n/a	n/a	-0.0703
C2(LH)	!A1&!A2&B1&!B2&C1	0.0100	n/a	n/a	-0.0680
C2(LH)	!A1&!A2&B1&B2&!C1	0.0100	n/a	n/a	-0.0704
C2(LH)	!A1&!A2&B1&B2&C1	0.0100	n/a	n/a	-0.0680
C2(LH)	!A1&A2&!B1&!B2&!C1	0.0100	n/a	n/a	-0.0704
C2(LH)	!A1&A2&!B1&!B2&C1	0.0100	n/a	n/a	-0.0680
C2(LH)	A1&!A2&!B1&!B2&!C1	0.0100	n/a	n/a	-0.0704
C2(LH)	A1&!A2&!B1&!B2&C1	0.0100	n/a	n/a	-0.0680
C2(LH)	A1&A2&!B1&!B2&!C1	0.0100	n/a	n/a	-0.0704
C2(LH)	A1&A2&!B1&!B2&C1	0.0100	n/a	n/a	-0.0680
C2(LH)	!A1&A2&!B1&B2&C1	0.0100	n/a	n/a	-0.0586
C2(LH)	!A1&A2&B1&!B2&C1	0.0100	n/a	n/a	-0.0586
C2(LH)	!A1&A2&B1&B2&C1	0.0100	n/a	n/a	-0.0586
C2(LH)	A1&!A2&!B1&B2&C1	0.0100	n/a	n/a	-0.0586
C2(LH)	A1&!A2&B1&!B2&C1	0.0100	n/a	n/a	-0.0586
C2(LH)	A1&!A2&B1&B2&C1	0.0100	n/a	n/a	-0.0586
C2(LH)	A1&A2&!B1&B2&C1	0.0100	n/a	n/a	-0.0586
C2(LH)	A1&A2&B1&!B2&C1	0.0100	n/a	n/a	-0.0586
C2(LH)	A1&A2&B1&B2&C1	0.0100	n/a	n/a	-0.0586
A2(LH)	!A1&!B1&!B2&!C1&!C2	0.0100	n/a	n/a	0.0682
A2(LH)	!A1&!B1&!B2&!C1&C2	0.0100	n/a	n/a	0.0682
A2(LH)	!A1&!B1&!B2&C1&!C2	0.0100	n/a	n/a	0.0682

continues on next page

Table 89 – continued from previous page

A2(LH)	!A1&!B1&!B2&C1&C2	0.0100	n/a	n/a	0.0682
A2(LH)	!A1&!B1&B2&!C1&!C2	0.0100	n/a	n/a	0.2376
A2(LH)	!A1&B1&!B2&!C1&!C2	0.0100	n/a	n/a	0.2376
A2(LH)	!A1&B1&B2&!C1&!C2	0.0100	n/a	n/a	0.2797
A2(LH)	A1&!B1&!B2&!C1&!C2	0.0100	n/a	n/a	-0.0771
A2(LH)	A1&!B1&!B2&!C1&C2	0.0100	n/a	n/a	-0.0771
A2(LH)	A1&!B1&!B2&C1&!C2	0.0100	n/a	n/a	-0.0771
A2(LH)	A1&!B1&!B2&C1&C2	0.0100	n/a	n/a	-0.0771
A2(LH)	A1&!B1&B2&!C1&!C2	0.0100	n/a	n/a	-0.0771
A2(LH)	A1&B1&!B2&!C1&!C2	0.0100	n/a	n/a	-0.0771
A2(LH)	A1&B1&B2&!C1&!C2	0.0100	n/a	n/a	-0.0771
A2(LH)	A1&!B1&B2&!C1&C2	0.0100	n/a	n/a	-0.0586
A2(LH)	A1&!B1&B2&C1&!C2	0.0100	n/a	n/a	-0.0586
A2(LH)	A1&!B1&B2&C1&C2	0.0100	n/a	n/a	-0.0586
A2(LH)	A1&B1&!B2&!C1&C2	0.0100	n/a	n/a	-0.0586
A2(LH)	A1&B1&!B2&C1&!C2	0.0100	n/a	n/a	-0.0586
A2(LH)	A1&B1&!B2&C1&C2	0.0100	n/a	n/a	-0.0586
A2(LH)	A1&B1&B2&!C1&C2	0.0100	n/a	n/a	-0.0586
A2(LH)	A1&B1&B2&C1&!C2	0.0100	n/a	n/a	-0.0586
A2(LH)	A1&B1&B2&C1&C2	0.0100	n/a	n/a	-0.0585
A1(LH)	!A2&!B1&!B2&!C1&!C2	0.0100	n/a	n/a	0.0674
A1(LH)	!A2&!B1&!B2&!C1&C2	0.0100	n/a	n/a	0.0675
A1(LH)	!A2&!B1&!B2&C1&!C2	0.0100	n/a	n/a	0.0675
A1(LH)	!A2&!B1&!B2&C1&C2	0.0100	n/a	n/a	0.0675
A1(LH)	!A2&!B1&B2&!C1&!C2	0.0100	n/a	n/a	0.2368
A1(LH)	!A2&B1&!B2&!C1&!C2	0.0100	n/a	n/a	0.2368
A1(LH)	!A2&B1&B2&!C1&!C2	0.0100	n/a	n/a	0.2790
A1(LH)	A2&!B1&!B2&!C1&!C2	0.0100	n/a	n/a	-0.0779
A1(LH)	A2&!B1&!B2&!C1&C2	0.0100	n/a	n/a	-0.0778
A1(LH)	A2&!B1&!B2&C1&!C2	0.0100	n/a	n/a	-0.0778
A1(LH)	A2&!B1&!B2&C1&C2	0.0100	n/a	n/a	-0.0778
A1(LH)	A2&!B1&B2&!C1&!C2	0.0100	n/a	n/a	-0.0778
A1(LH)	A2&B1&!B2&!C1&!C2	0.0100	n/a	n/a	-0.0778
A1(LH)	A2&B1&B2&!C1&!C2	0.0100	n/a	n/a	-0.0778
A1(LH)	A2&!B1&B2&!C1&C2	0.0100	n/a	n/a	-0.0202
A1(LH)	A2&!B1&B2&C1&!C2	0.0100	n/a	n/a	-0.0202
A1(LH)	A2&!B1&B2&C1&C2	0.0100	n/a	n/a	-0.0202
A1(LH)	A2&B1&!B2&!C1&C2	0.0100	n/a	n/a	-0.0202
A1(LH)	A2&B1&!B2&C1&!C2	0.0100	n/a	n/a	-0.0202
A1(LH)	A2&B1&!B2&C1&C2	0.0100	n/a	n/a	-0.0202
A1(LH)	A2&B1&B2&!C1&C2	0.0100	n/a	n/a	-0.0202
A1(LH)	A2&B1&B2&C1&!C2	0.0100	n/a	n/a	-0.0202
A1(LH)	A2&B1&B2&C1&C2	0.0100	n/a	n/a	-0.0202
C1(LH)	!A1&!A2&!B1&!B2&!C2	0.0100	n/a	n/a	-0.0709
C1(LH)	!A1&!A2&!B1&!B2&C2	0.0100	n/a	n/a	-0.0689
C1(LH)	!A1&!A2&!B1&B2&!C2	0.0100	n/a	n/a	-0.0710
C1(LH)	!A1&!A2&!B1&B2&C2	0.0100	n/a	n/a	-0.0689
C1(LH)	!A1&!A2&B1&!B2&!C2	0.0100	n/a	n/a	-0.0710
C1(LH)	!A1&!A2&B1&!B2&C2	0.0100	n/a	n/a	-0.0688
C1(LH)	!A1&!A2&B1&B2&!C2	0.0100	n/a	n/a	-0.0710
C1(LH)	!A1&!A2&B1&B2&C2	0.0100	n/a	n/a	-0.0688
C1(LH)	!A1&A2&!B1&!B2&!C2	0.0100	n/a	n/a	-0.0710

continues on next page

Table 89 – continued from previous page

C1(LH)	!A1&A2&!B1&!B2&C2	0.0100	n/a	n/a	-0.0688
C1(LH)	A1&!A2&!B1&!B2&!C2	0.0100	n/a	n/a	-0.0709
C1(LH)	A1&!A2&!B1&!B2&C2	0.0100	n/a	n/a	-0.0688
C1(LH)	A1&A2&!B1&!B2&!C2	0.0100	n/a	n/a	-0.0709
C1(LH)	A1&A2&!B1&!B2&C2	0.0100	n/a	n/a	-0.0688
C1(LH)	!A1&A2&!B1&B2&C2	0.0100	n/a	n/a	-0.0202
C1(LH)	!A1&A2&B1&!B2&C2	0.0100	n/a	n/a	-0.0202
C1(LH)	!A1&A2&B1&B2&C2	0.0100	n/a	n/a	-0.0202
C1(LH)	A1&!A2&!B1&B2&C2	0.0100	n/a	n/a	-0.0202
C1(LH)	A1&!A2&B1&!B2&C2	0.0100	n/a	n/a	-0.0202
C1(LH)	A1&!A2&B1&B2&C2	0.0100	n/a	n/a	-0.0202
C1(LH)	A1&A2&!B1&B2&C2	0.0100	n/a	n/a	-0.0202
C1(LH)	A1&A2&B1&!B2&C2	0.0100	n/a	n/a	-0.0202
C1(LH)	A1&A2&B1&B2&C2	0.0100	n/a	n/a	-0.0201
A2(HL)	!A1&!B1&!B2&!C1&!C2	0.0100	n/a	n/a	0.0796
A2(HL)	!A1&!B1&!B2&!C1&C2	0.0100	n/a	n/a	0.0796
A2(HL)	!A1&!B1&!B2&C1&!C2	0.0100	n/a	n/a	0.0796
A2(HL)	!A1&!B1&!B2&C1&C2	0.0100	n/a	n/a	0.0796
A2(HL)	!A1&!B1&B2&!C1&!C2	0.0100	n/a	n/a	0.0796
A2(HL)	!A1&B1&!B2&!C1&!C2	0.0100	n/a	n/a	0.0796
A2(HL)	!A1&B1&B2&!C1&!C2	0.0100	n/a	n/a	0.0796
A2(HL)	A1&!B1&!B2&!C1&!C2	0.0100	n/a	n/a	0.0811
A2(HL)	A1&!B1&!B2&!C1&C2	0.0100	n/a	n/a	0.0812
A2(HL)	A1&!B1&!B2&C1&!C2	0.0100	n/a	n/a	0.0812
A2(HL)	A1&!B1&!B2&C1&C2	0.0100	n/a	n/a	0.0812
A2(HL)	A1&!B1&B2&!C1&!C2	0.0100	n/a	n/a	0.0815
A2(HL)	A1&B1&!B2&!C1&!C2	0.0100	n/a	n/a	0.0815
A2(HL)	A1&B1&B2&!C1&!C2	0.0100	n/a	n/a	0.0812
A2(HL)	A1&!B1&B2&!C1&C2	0.0100	n/a	n/a	0.0703
A2(HL)	A1&!B1&B2&C1&!C2	0.0100	n/a	n/a	0.0703
A2(HL)	A1&!B1&B2&C1&C2	0.0100	n/a	n/a	0.0703
A2(HL)	A1&B1&!B2&!C1&C2	0.0100	n/a	n/a	0.0703
A2(HL)	A1&B1&!B2&C1&!C2	0.0100	n/a	n/a	0.0703
A2(HL)	A1&B1&!B2&C1&C2	0.0100	n/a	n/a	0.0703
A2(HL)	A1&B1&B2&!C1&C2	0.0100	n/a	n/a	0.0703
A2(HL)	A1&B1&B2&C1&!C2	0.0100	n/a	n/a	0.0703
A2(HL)	A1&B1&B2&C1&C2	0.0100	n/a	n/a	0.0703
B1(HL)	!A1&!A2&!B2&!C1&!C2	0.0100	n/a	n/a	0.0926
B1(HL)	!A1&!A2&!B2&!C1&C2	0.0100	n/a	n/a	0.0841
B1(HL)	!A1&!A2&!B2&C1&!C2	0.0100	n/a	n/a	0.0841
B1(HL)	!A1&!A2&!B2&C1&C2	0.0100	n/a	n/a	0.0824
B1(HL)	!A1&!A2&B2&!C1&!C2	0.0100	n/a	n/a	0.0946
B1(HL)	!A1&!A2&B2&!C1&C2	0.0100	n/a	n/a	0.0708
B1(HL)	!A1&!A2&B2&C1&!C2	0.0100	n/a	n/a	0.0708
B1(HL)	!A1&!A2&B2&C1&C2	0.0100	n/a	n/a	0.0708
B1(HL)	!A1&A2&!B2&!C1&!C2	0.0100	n/a	n/a	0.0740
B1(HL)	!A1&A2&B2&!C1&!C2	0.0100	n/a	n/a	0.0755
B1(HL)	A1&!A2&!B2&!C1&!C2	0.0100	n/a	n/a	0.0740
B1(HL)	A1&!A2&B2&!C1&!C2	0.0100	n/a	n/a	0.0754
B1(HL)	A1&A2&!B2&!C1&!C2	0.0100	n/a	n/a	0.0739
B1(HL)	A1&A2&B2&!C1&!C2	0.0100	n/a	n/a	0.0753
B1(HL)	!A1&A2&B2&!C1&C2	0.0100	n/a	n/a	0.0512

continues on next page

Table 89 – continued from previous page

B1(HL)	!A1&A2&B2&C1&!C2	0.0100	n/a	n/a	0.0512
B1(HL)	!A1&A2&B2&C1&C2	0.0100	n/a	n/a	0.0512
B1(HL)	A1&!A2&B2&!C1&C2	0.0100	n/a	n/a	0.0512
B1(HL)	A1&!A2&B2&C1&!C2	0.0100	n/a	n/a	0.0512
B1(HL)	A1&!A2&B2&C1&C2	0.0100	n/a	n/a	0.0512
B1(HL)	A1&A2&B2&!C1&C2	0.0100	n/a	n/a	0.0512
B1(HL)	A1&A2&B2&C1&!C2	0.0100	n/a	n/a	0.0512
B1(HL)	A1&A2&B2&C1&C2	0.0100	n/a	n/a	0.0512
C1(HL)	!A1&!A2&!B1&!B2&!C2	0.0100	n/a	n/a	0.0710
C1(HL)	!A1&!A2&!B1&!B2&C2	0.0100	n/a	n/a	0.0707
C1(HL)	!A1&!A2&!B1&B2&!C2	0.0100	n/a	n/a	0.0712
C1(HL)	!A1&!A2&!B1&B2&C2	0.0100	n/a	n/a	0.0708
C1(HL)	!A1&!A2&B1&!B2&!C2	0.0100	n/a	n/a	0.0712
C1(HL)	!A1&!A2&B1&!B2&C2	0.0100	n/a	n/a	0.0708
C1(HL)	!A1&!A2&B1&B2&!C2	0.0100	n/a	n/a	0.0711
C1(HL)	!A1&!A2&B1&B2&C2	0.0100	n/a	n/a	0.0707
C1(HL)	!A1&A2&!B1&!B2&!C2	0.0100	n/a	n/a	0.0719
C1(HL)	!A1&A2&!B1&!B2&C2	0.0100	n/a	n/a	0.0708
C1(HL)	A1&!A2&!B1&!B2&!C2	0.0100	n/a	n/a	0.0719
C1(HL)	A1&!A2&!B1&!B2&C2	0.0100	n/a	n/a	0.0708
C1(HL)	A1&A2&!B1&!B2&!C2	0.0100	n/a	n/a	0.0719
C1(HL)	A1&A2&!B1&!B2&C2	0.0100	n/a	n/a	0.0708
C1(HL)	!A1&A2&!B1&B2&C2	0.0100	n/a	n/a	0.0528
C1(HL)	!A1&A2&B1&!B2&C2	0.0100	n/a	n/a	0.0529
C1(HL)	!A1&A2&B1&B2&C2	0.0100	n/a	n/a	0.0529
C1(HL)	A1&!A2&!B1&B2&C2	0.0100	n/a	n/a	0.0528
C1(HL)	A1&!A2&B1&!B2&C2	0.0100	n/a	n/a	0.0529
C1(HL)	A1&!A2&B1&B2&C2	0.0100	n/a	n/a	0.0529
C1(HL)	A1&A2&!B1&B2&C2	0.0100	n/a	n/a	0.0528
C1(HL)	A1&A2&B1&!B2&C2	0.0100	n/a	n/a	0.0529
C1(HL)	A1&A2&B1&B2&C2	0.0100	n/a	n/a	0.0529
A1(HL)	!A2&!B1&!B2&!C1&!C2	0.0100	n/a	n/a	0.0799
A1(HL)	!A2&!B1&!B2&!C1&C2	0.0100	n/a	n/a	0.0800
A1(HL)	!A2&!B1&!B2&C1&!C2	0.0100	n/a	n/a	0.0800
A1(HL)	!A2&!B1&!B2&C1&C2	0.0100	n/a	n/a	0.0800
A1(HL)	!A2&!B1&B2&!C1&!C2	0.0100	n/a	n/a	0.0800
A1(HL)	!A2&B1&!B2&!C1&!C2	0.0100	n/a	n/a	0.0800
A1(HL)	!A2&B1&B2&!C1&!C2	0.0100	n/a	n/a	0.0800
A1(HL)	A2&!B1&!B2&!C1&!C2	0.0100	n/a	n/a	0.0813
A1(HL)	A2&!B1&!B2&!C1&C2	0.0100	n/a	n/a	0.0814
A1(HL)	A2&!B1&!B2&C1&!C2	0.0100	n/a	n/a	0.0814
A1(HL)	A2&!B1&!B2&C1&C2	0.0100	n/a	n/a	0.0814
A1(HL)	A2&!B1&B2&!C1&!C2	0.0100	n/a	n/a	0.0817
A1(HL)	A2&B1&!B2&!C1&!C2	0.0100	n/a	n/a	0.0817
A1(HL)	A2&B1&B2&!C1&!C2	0.0100	n/a	n/a	0.0814
A1(HL)	A2&!B1&B2&!C1&C2	0.0100	n/a	n/a	0.0549
A1(HL)	A2&!B1&B2&C1&!C2	0.0100	n/a	n/a	0.0549
A1(HL)	A2&!B1&B2&C1&C2	0.0100	n/a	n/a	0.0549
A1(HL)	A2&B1&!B2&!C1&C2	0.0100	n/a	n/a	0.0549
A1(HL)	A2&B1&!B2&C1&!C2	0.0100	n/a	n/a	0.0549
A1(HL)	A2&B1&!B2&C1&C2	0.0100	n/a	n/a	0.0549
A1(HL)	A2&B1&B2&!C1&C2	0.0100	n/a	n/a	0.0549

continues on next page

Table 89 – continued from previous page

A1(HL)	A2&B1&B2&C1&!C2	0.0100	n/a	n/a	0.0549
A1(HL)	A2&B1&B2&C1&C2	0.0100	n/a	n/a	0.0549
B1(LH)	!A1&!A2&!B2&!C1&!C2	0.0100	n/a	n/a	-0.0710
B1(LH)	!A1&!A2&!B2&!C1&C2	0.0100	n/a	n/a	-0.0710
B1(LH)	!A1&!A2&!B2&C1&!C2	0.0100	n/a	n/a	-0.0709
B1(LH)	!A1&!A2&!B2&C1&C2	0.0100	n/a	n/a	-0.0710
B1(LH)	!A1&!A2&B2&!C1&!C2	0.0100	n/a	n/a	-0.0689
B1(LH)	!A1&!A2&B2&!C1&C2	0.0100	n/a	n/a	-0.0689
B1(LH)	!A1&!A2&B2&C1&!C2	0.0100	n/a	n/a	-0.0689
B1(LH)	!A1&!A2&B2&C1&C2	0.0100	n/a	n/a	-0.0688
B1(LH)	!A1&A2&!B2&!C1&!C2	0.0100	n/a	n/a	0.0288
B1(LH)	!A1&A2&B2&!C1&!C2	0.0100	n/a	n/a	-0.0689
B1(LH)	A1&!A2&!B2&!C1&!C2	0.0100	n/a	n/a	0.0287
B1(LH)	A1&!A2&B2&!C1&!C2	0.0100	n/a	n/a	-0.0688
B1(LH)	A1&A2&!B2&!C1&!C2	0.0100	n/a	n/a	0.0289
B1(LH)	A1&A2&B2&!C1&!C2	0.0100	n/a	n/a	-0.0689
B1(LH)	!A1&A2&B2&!C1&C2	0.0100	n/a	n/a	-0.0201
B1(LH)	!A1&A2&B2&C1&!C2	0.0100	n/a	n/a	-0.0201
B1(LH)	!A1&A2&B2&C1&C2	0.0100	n/a	n/a	-0.0201
B1(LH)	A1&!A2&B2&!C1&C2	0.0100	n/a	n/a	-0.0201
B1(LH)	A1&!A2&B2&C1&!C2	0.0100	n/a	n/a	-0.0201
B1(LH)	A1&!A2&B2&C1&C2	0.0100	n/a	n/a	-0.0201
B1(LH)	A1&A2&B2&!C1&C2	0.0100	n/a	n/a	-0.0201
B1(LH)	A1&A2&B2&C1&!C2	0.0100	n/a	n/a	-0.0201
B1(LH)	A1&A2&B2&C1&C2	0.0100	n/a	n/a	-0.0201

LEAKAGE POWER

When Condition	Power (nW)
!A1&!A2&!B1&!B2&!C1&!C2	0.1509
!A1&!A2&!B1&!B2&!C1&C2	0.1509
!A1&!A2&!B1&!B2&C1&!C2	0.1509
!A1&!A2&!B1&!B2&C1&C2	0.1509
!A1&!A2&!B1&B2&!C1&!C2	0.1511
!A1&!A2&!B1&B2&!C1&C2	0.1518
!A1&!A2&!B1&B2&C1&!C2	0.1518
!A1&!A2&!B1&B2&C1&C2	0.1518
!A1&!A2&B1&!B2&!C1&!C2	0.1511
!A1&!A2&B1&!B2&!C1&C2	0.1518
!A1&!A2&B1&!B2&C1&!C2	0.1518
!A1&!A2&B1&!B2&C1&C2	0.1518
!A1&!A2&B1&B2&!C1&!C2	0.1511
!A1&!A2&B1&B2&!C1&C2	0.1518
!A1&!A2&B1&B2&C1&!C2	0.1518
!A1&!A2&B1&B2&C1&C2	0.1518
!A1&A2&!B1&!B2&!C1&!C2	0.3100
!A1&A2&!B1&!B2&!C1&C2	0.3106

continues on next page

Table 90 – continued from previous page

!A1&A2&!B1&!B2&C1&!C2	0.3106
!A1&A2&!B1&!B2&C1&C2	0.3106
!A1&A2&!B1&B2&!C1&!C2	0.4662
!A1&A2&B1&!B2&!C1&!C2	0.4662
!A1&A2&B1&B2&!C1&!C2	0.4668
A1&!A2&!B1&!B2&!C1&!C2	0.3100
A1&!A2&!B1&!B2&!C1&C2	0.3106
A1&!A2&!B1&!B2&C1&!C2	0.3106
A1&!A2&!B1&!B2&C1&C2	0.3106
A1&!A2&!B1&B2&!C1&!C2	0.4662
A1&!A2&B1&!B2&!C1&!C2	0.4662
A1&!A2&B1&B2&!C1&!C2	0.4668
A1&A2&!B1&!B2&!C1&!C2	0.3108
A1&A2&!B1&!B2&!C1&C2	0.3114
A1&A2&!B1&!B2&C1&!C2	0.3114
A1&A2&!B1&!B2&C1&C2	0.3114
A1&A2&!B1&B2&!C1&!C2	0.4671
A1&A2&B1&!B2&!C1&!C2	0.4671
A1&A2&B1&B2&!C1&!C2	0.4678
!A1&A2&!B1&B2&!C1&C2	0.4226
!A1&A2&!B1&B2&C1&!C2	0.3512
!A1&A2&!B1&B2&C1&C2	0.3512
!A1&A2&B1&!B2&!C1&C2	0.3512
!A1&A2&B1&!B2&C1&!C2	0.2799
!A1&A2&B1&!B2&C1&C2	0.2799
!A1&A2&B1&B2&!C1&C2	0.3512
!A1&A2&B1&B2&C1&!C2	0.2799
!A1&A2&B1&B2&C1&C2	0.2799
A1&!A2&!B1&B2&!C1&C2	0.3512
A1&!A2&!B1&B2&C1&!C2	0.2799
A1&!A2&!B1&B2&C1&C2	0.2799
A1&!A2&B1&!B2&!C1&C2	0.2799
A1&!A2&B1&!B2&C1&!C2	0.2085
A1&!A2&B1&!B2&C1&C2	0.2085
A1&!A2&B1&B2&!C1&C2	0.2799
A1&!A2&B1&B2&C1&!C2	0.2085
A1&!A2&B1&B2&C1&C2	0.2085
A1&A2&!B1&B2&!C1&C2	0.3512
A1&A2&!B1&B2&C1&!C2	0.2799
A1&A2&!B1&B2&C1&C2	0.2799
A1&A2&B1&!B2&!C1&C2	0.2799
A1&A2&B1&!B2&C1&!C2	0.2085
A1&A2&B1&!B2&C1&C2	0.2085
A1&A2&B1&B2&!C1&C2	0.2799
A1&A2&B1&B2&C1&!C2	0.2085
A1&A2&B1&B2&C1&C2	0.2085

gf180mcu_fd_sc_mcu7t5v0__oai222_4

gf180mcu_fd_sc_mcu7t5v0__oai222_4 symbol

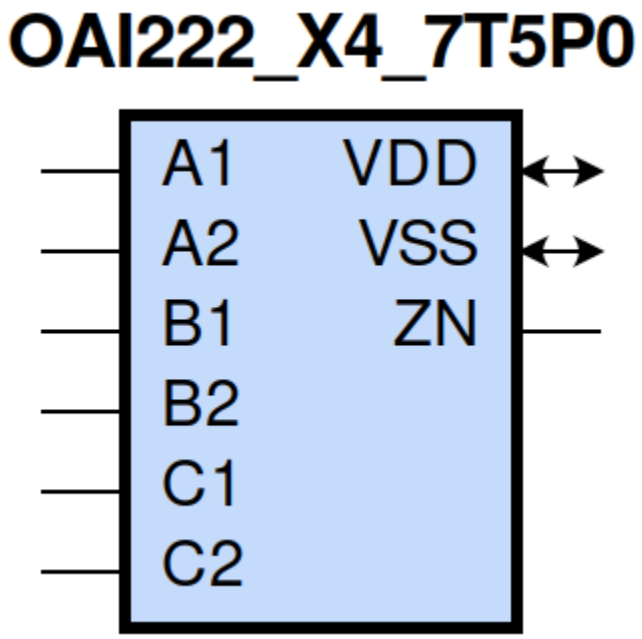

gf180mcu_fd_sc_mcu7t5v0__oai222_4 schematic

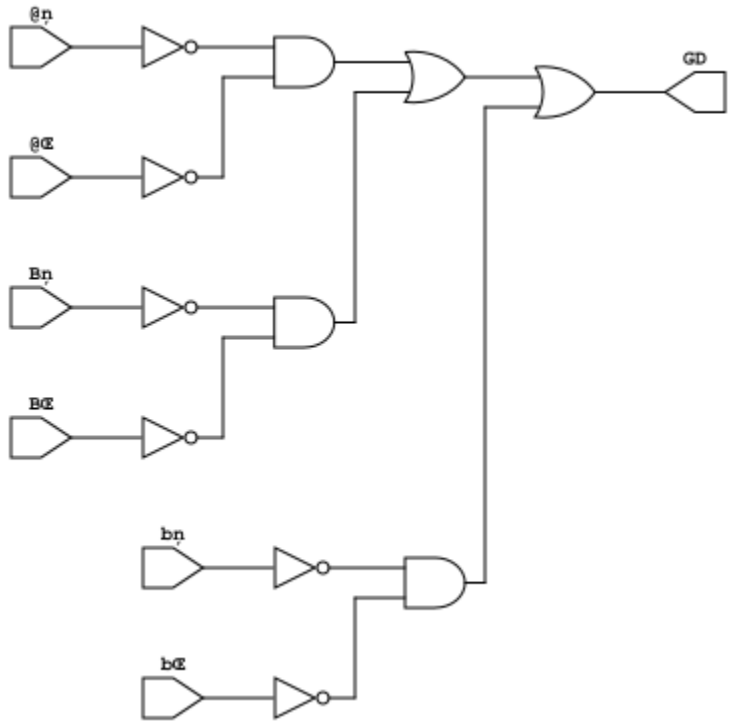

gf180mcu_fd_sc_mcu7t5v0__oai222_4 layout

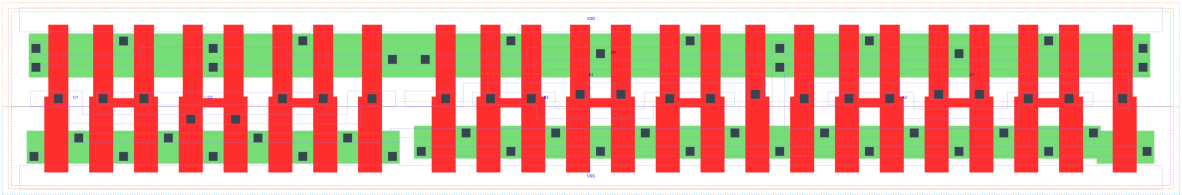

OAI222_X4 is a three 2-input OR into 3-input NAND, NAND[OR(A1,A2),OR(B1,B2),OR(C1,C2)], 4X drive strength

Attributes

Attribute	Value
area	111.955200 μm^2

OUTPUT FUNCTIONS

Output Pin	Function
ZN	(((!A1)&(!A2))|((!B1)&(!B2))|((!C1)&(!C2)))

TRUTH TABLE FOR ZN

A1	A2	B1	B2	C1	C2	ZN
0	0	?	?	?	?	1
?	?	0	0	?	?	1
?	?	?	?	0	0	1
1	?	1	?	1	?	0
1	?	1	?	?	1	0
1	?	?	1	1	?	0
1	?	?	1	?	1	0
?	1	1	?	1	?	0
?	1	1	?	?	1	0
?	1	?	1	1	?	0
?	1	?	1	?	1	0

FUNCTIONAL SCHEMATIC

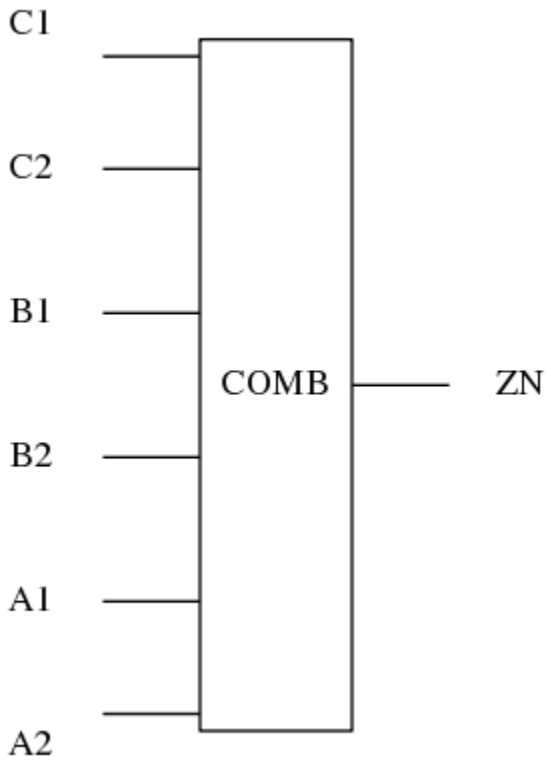

PIN CAPACITANCE (pf)

Pin	Type	Capacitance (pf)
C1	input	0.0191
C2	input	0.0174
B1	input	0.0191
B2	input	0.0177
A1	input	0.0192
A2	input	0.0180

DELAY AND OUTPUT TRANSITION TIME corresponding to min slew and load

Input Pin	Output	When Condition	Tin (ns)	Out Load (pf)	Delay (ns)	Tout (ns)
C1(LH)	ZN(HL)	!A1&A2&!B1&B2&!C2	0.0100	0.0010	0.2324	0.1173
C1(LH)	ZN(HL)	!A1&A2&B1&!B2&!C2	0.0100	0.0010	0.1996	0.0961
C1(LH)	ZN(HL)	!A1&A2&B1&B2&!C2	0.0100	0.0010	0.1805	0.0807
C1(LH)	ZN(HL)	A1&!A2&!B1&B2&!C2	0.0100	0.0010	0.1991	0.0957
C1(LH)	ZN(HL)	A1&!A2&B1&!B2&!C2	0.0100	0.0010	0.1679	0.0740

continues on next page

Table 91 – continued from previous page

C1(LH)	ZN(HL)	A1&!A2&B1&B2&!C2	0.0100	0.0010	0.1537	0.0630
C1(LH)	ZN(HL)	A1&A2&!B1&B2&!C2	0.0100	0.0010	0.1757	0.0965
C1(LH)	ZN(HL)	A1&A2&B1&!B2&!C2	0.0100	0.0010	0.1503	0.0778
C1(LH)	ZN(HL)	A1&A2&B1&B2&!C2	0.0100	0.0010	0.1320	0.0629
C1(HL)	ZN(LH)	!A1&A2&!B1&B2&!C2	0.0100	0.0010	0.3442	0.3510
C1(HL)	ZN(LH)	!A1&A2&B1&!B2&!C2	0.0100	0.0010	0.3256	0.3010
C1(HL)	ZN(LH)	!A1&A2&B1&B2&!C2	0.0100	0.0010	0.3462	0.3164
C1(HL)	ZN(LH)	A1&!A2&!B1&B2&!C2	0.0100	0.0010	0.3255	0.3000
C1(HL)	ZN(LH)	A1&!A2&B1&!B2&!C2	0.0100	0.0010	0.3085	0.2491
C1(HL)	ZN(LH)	A1&!A2&B1&B2&!C2	0.0100	0.0010	0.3283	0.2637
C1(HL)	ZN(LH)	A1&A2&!B1&B2&!C2	0.0100	0.0010	0.3570	0.3203
C1(HL)	ZN(LH)	A1&A2&B1&!B2&!C2	0.0100	0.0010	0.3415	0.2711
C1(HL)	ZN(LH)	A1&A2&B1&B2&!C2	0.0100	0.0010	0.3636	0.2874
C2(LH)	ZN(HL)	!A1&A2&!B1&B2&!C1	0.0100	0.0010	0.2634	0.1395
C2(LH)	ZN(HL)	!A1&A2&B1&!B2&!C1	0.0100	0.0010	0.2296	0.1176
C2(LH)	ZN(HL)	!A1&A2&B1&B2&!C1	0.0100	0.0010	0.2061	0.0986
C2(LH)	ZN(HL)	A1&!A2&!B1&B2&!C1	0.0100	0.0010	0.2291	0.1171
C2(LH)	ZN(HL)	A1&!A2&B1&!B2&!C1	0.0100	0.0010	0.1964	0.0957
C2(LH)	ZN(HL)	A1&!A2&B1&B2&!C1	0.0100	0.0010	0.1777	0.0805
C2(LH)	ZN(HL)	A1&A2&!B1&B2&!C1	0.0100	0.0010	0.2005	0.1149
C2(LH)	ZN(HL)	A1&A2&B1&!B2&!C1	0.0100	0.0010	0.1735	0.0967
C2(LH)	ZN(HL)	A1&A2&B1&B2&!C1	0.0100	0.0010	0.1502	0.0775
C2(HL)	ZN(LH)	!A1&A2&!B1&B2&!C1	0.0100	0.0010	0.3713	0.3509
C2(HL)	ZN(LH)	!A1&A2&B1&!B2&!C1	0.0100	0.0010	0.3526	0.3009
C2(HL)	ZN(LH)	!A1&A2&B1&B2&!C1	0.0100	0.0010	0.3733	0.3163
C2(HL)	ZN(LH)	A1&!A2&!B1&B2&!C1	0.0100	0.0010	0.3525	0.2999
C2(HL)	ZN(LH)	A1&!A2&B1&!B2&!C1	0.0100	0.0010	0.3356	0.2491
C2(HL)	ZN(LH)	A1&!A2&B1&B2&!C1	0.0100	0.0010	0.3556	0.2636
C2(HL)	ZN(LH)	A1&A2&!B1&B2&!C1	0.0100	0.0010	0.3841	0.3202
C2(HL)	ZN(LH)	A1&A2&B1&!B2&!C1	0.0100	0.0010	0.3684	0.2712
C2(HL)	ZN(LH)	A1&A2&B1&B2&!C1	0.0100	0.0010	0.3906	0.2873
B1(LH)	ZN(HL)	!A1&A2&!B2&!C1&C2	0.0100	0.0010	0.2037	0.1175
B1(LH)	ZN(HL)	!A1&A2&!B2&C1&!C2	0.0100	0.0010	0.1707	0.0957
B1(LH)	ZN(HL)	!A1&A2&!B2&C1&C2	0.0100	0.0010	0.1487	0.0788
B1(LH)	ZN(HL)	A1&!A2&!B2&!C1&C2	0.0100	0.0010	0.1705	0.0955
B1(LH)	ZN(HL)	A1&!A2&!B2&C1&!C2	0.0100	0.0010	0.1392	0.0738
B1(LH)	ZN(HL)	A1&!A2&!B2&C1&C2	0.0100	0.0010	0.1223	0.0605
B1(LH)	ZN(HL)	A1&A2&!B2&!C1&C2	0.0100	0.0010	0.1469	0.0967
B1(LH)	ZN(HL)	A1&A2&!B2&C1&!C2	0.0100	0.0010	0.1213	0.0776
B1(LH)	ZN(HL)	A1&A2&!B2&C1&C2	0.0100	0.0010	0.1049	0.0593
B1(HL)	ZN(LH)	!A1&A2&!B2&!C1&C2	0.0100	0.0010	0.2682	0.2837
B1(HL)	ZN(LH)	!A1&A2&!B2&C1&!C2	0.0100	0.0010	0.2531	0.2361
B1(HL)	ZN(LH)	!A1&A2&!B2&C1&C2	0.0100	0.0010	0.2517	0.2361
B1(HL)	ZN(LH)	A1&!A2&!B2&!C1&C2	0.0100	0.0010	0.2532	0.2357
B1(HL)	ZN(LH)	A1&!A2&!B2&C1&!C2	0.0100	0.0010	0.2404	0.1885
B1(HL)	ZN(LH)	A1&!A2&!B2&C1&C2	0.0100	0.0010	0.2387	0.1885
B1(HL)	ZN(LH)	A1&A2&!B2&!C1&C2	0.0100	0.0010	0.2790	0.2551
B1(HL)	ZN(LH)	A1&A2&!B2&C1&!C2	0.0100	0.0010	0.2665	0.2083
B1(HL)	ZN(LH)	A1&A2&!B2&C1&C2	0.0100	0.0010	0.2652	0.2082
B2(HL)	ZN(LH)	!A1&A2&!B1&!C1&C2	0.0100	0.0010	0.2948	0.2840
B2(HL)	ZN(LH)	!A1&A2&!B1&C1&!C2	0.0100	0.0010	0.2799	0.2362
B2(HL)	ZN(LH)	!A1&A2&!B1&C1&C2	0.0100	0.0010	0.2785	0.2361

continues on next page

Table 91 – continued from previous page

B2(HL)	ZN(LH)	A1&!A2&!B1&!C1&C2	0.0100	0.0010	0.2799	0.2358
B2(HL)	ZN(LH)	A1&!A2&!B1&C1&!C2	0.0100	0.0010	0.2670	0.1886
B2(HL)	ZN(LH)	A1&!A2&!B1&C1&C2	0.0100	0.0010	0.2655	0.1884
B2(HL)	ZN(LH)	A1&A2&!B1&!C1&C2	0.0100	0.0010	0.3058	0.2550
B2(HL)	ZN(LH)	A1&A2&!B1&C1&!C2	0.0100	0.0010	0.2934	0.2083
B2(HL)	ZN(LH)	A1&A2&!B1&C1&C2	0.0100	0.0010	0.2921	0.2082
B2(LH)	ZN(HL)	!A1&A2&!B1&!C1&C2	0.0100	0.0010	0.2344	0.1391
B2(LH)	ZN(HL)	!A1&A2&!B1&C1&!C2	0.0100	0.0010	0.2004	0.1172
B2(LH)	ZN(HL)	!A1&A2&!B1&C1&C2	0.0100	0.0010	0.1741	0.0971
B2(LH)	ZN(HL)	A1&!A2&!B1&!C1&C2	0.0100	0.0010	0.2003	0.1171
B2(LH)	ZN(HL)	A1&!A2&!B1&C1&!C2	0.0100	0.0010	0.1674	0.0955
B2(LH)	ZN(HL)	A1&!A2&!B1&C1&C2	0.0100	0.0010	0.1459	0.0784
B2(LH)	ZN(HL)	A1&A2&!B1&!C1&C2	0.0100	0.0010	0.1716	0.1149
B2(LH)	ZN(HL)	A1&A2&!B1&C1&!C2	0.0100	0.0010	0.1443	0.0965
B2(LH)	ZN(HL)	A1&A2&!B1&C1&C2	0.0100	0.0010	0.1229	0.0744
A1(HL)	ZN(LH)	!A2&!B1&B2&!C1&C2	0.0100	0.0010	0.1677	0.2050
A1(HL)	ZN(LH)	!A2&!B1&B2&C1&!C2	0.0100	0.0010	0.1563	0.1584
A1(HL)	ZN(LH)	!A2&!B1&B2&C1&C2	0.0100	0.0010	0.1562	0.1582
A1(HL)	ZN(LH)	!A2&B1&!B2&!C1&C2	0.0100	0.0010	0.1563	0.1587
A1(HL)	ZN(LH)	!A2&B1&!B2&C1&!C2	0.0100	0.0010	0.1466	0.1153
A1(HL)	ZN(LH)	!A2&B1&!B2&C1&C2	0.0100	0.0010	0.1465	0.1152
A1(HL)	ZN(LH)	!A2&B1&B2&!C1&C2	0.0100	0.0010	0.1554	0.1588
A1(HL)	ZN(LH)	!A2&B1&B2&C1&!C2	0.0100	0.0010	0.1458	0.1151
A1(HL)	ZN(LH)	!A2&B1&B2&C1&C2	0.0100	0.0010	0.1455	0.1153
A1(LH)	ZN(HL)	!A2&!B1&B2&!C1&C2	0.0100	0.0010	0.1487	0.1164
A1(LH)	ZN(HL)	!A2&!B1&B2&C1&!C2	0.0100	0.0010	0.1158	0.0937
A1(LH)	ZN(HL)	!A2&!B1&B2&C1&C2	0.0100	0.0010	0.1063	0.0779
A1(LH)	ZN(HL)	!A2&B1&!B2&!C1&C2	0.0100	0.0010	0.1160	0.0939
A1(LH)	ZN(HL)	!A2&B1&!B2&C1&!C2	0.0100	0.0010	0.0858	0.0697
A1(LH)	ZN(HL)	!A2&B1&!B2&C1&C2	0.0100	0.0010	0.0806	0.0588
A1(LH)	ZN(HL)	!A2&B1&B2&!C1&C2	0.0100	0.0010	0.1007	0.0770
A1(LH)	ZN(HL)	!A2&B1&B2&C1&!C2	0.0100	0.0010	0.0758	0.0568
A1(LH)	ZN(HL)	!A2&B1&B2&C1&C2	0.0100	0.0010	0.0708	0.0471
A2(HL)	ZN(LH)	!A1&!B1&B2&!C1&C2	0.0100	0.0010	0.1956	0.2050
A2(HL)	ZN(LH)	!A1&!B1&B2&C1&!C2	0.0100	0.0010	0.1842	0.1584
A2(HL)	ZN(LH)	!A1&!B1&B2&C1&C2	0.0100	0.0010	0.1841	0.1583
A2(HL)	ZN(LH)	!A1&B1&!B2&!C1&C2	0.0100	0.0010	0.1842	0.1587
A2(HL)	ZN(LH)	!A1&B1&!B2&C1&!C2	0.0100	0.0010	0.1745	0.1153
A2(HL)	ZN(LH)	!A1&B1&!B2&C1&C2	0.0100	0.0010	0.1744	0.1154
A2(HL)	ZN(LH)	!A1&B1&B2&!C1&C2	0.0100	0.0010	0.1832	0.1588
A2(HL)	ZN(LH)	!A1&B1&B2&C1&!C2	0.0100	0.0010	0.1736	0.1153
A2(HL)	ZN(LH)	!A1&B1&B2&C1&C2	0.0100	0.0010	0.1735	0.1153
A2(LH)	ZN(HL)	!A1&!B1&B2&!C1&C2	0.0100	0.0010	0.1801	0.1390
A2(LH)	ZN(HL)	!A1&!B1&B2&C1&!C2	0.0100	0.0010	0.1460	0.1165
A2(LH)	ZN(HL)	!A1&!B1&B2&C1&C2	0.0100	0.0010	0.1320	0.0971
A2(LH)	ZN(HL)	!A1&B1&!B2&!C1&C2	0.0100	0.0010	0.1462	0.1168
A2(LH)	ZN(HL)	!A1&B1&!B2&C1&!C2	0.0100	0.0010	0.1133	0.0941
A2(LH)	ZN(HL)	!A1&B1&!B2&C1&C2	0.0100	0.0010	0.1042	0.0785
A2(LH)	ZN(HL)	!A1&B1&B2&!C1&C2	0.0100	0.0010	0.1261	0.0971
A2(LH)	ZN(HL)	!A1&B1&B2&C1&!C2	0.0100	0.0010	0.0985	0.0774
A2(LH)	ZN(HL)	!A1&B1&B2&C1&C2	0.0100	0.0010	0.0895	0.0629

DYNAMIC ENERGY

Input Pin	When Condition	Tin (ns)	Output	Out Load (pf)	Energy (uW/MHz)
A1	!A2&!B1&B2&!C1&C2	0.0100	ZN(LH)	0.0010	0.8367
A1	!A2&!B1&B2&C1&!C2	0.0100	ZN(LH)	0.0010	0.7294
A1	!A2&!B1&B2&C1&C2	0.0100	ZN(LH)	0.0010	0.7293
A1	!A2&B1&!B2&!C1&C2	0.0100	ZN(LH)	0.0010	0.7298
A1	!A2&B1&!B2&C1&!C2	0.0100	ZN(LH)	0.0010	0.6223
A1	!A2&B1&!B2&C1&C2	0.0100	ZN(LH)	0.0010	0.6220
A1	!A2&B1&B2&!C1&C2	0.0100	ZN(LH)	0.0010	0.7271
A1	!A2&B1&B2&C1&!C2	0.0100	ZN(LH)	0.0010	0.6196
A1	!A2&B1&B2&C1&C2	0.0100	ZN(LH)	0.0010	0.6193
B2	!A1&A2&!B1&!C1&C2	0.0100	ZN(LH)	0.0010	1.3366
B2	!A1&A2&!B1&C1&!C2	0.0100	ZN(LH)	0.0010	1.2293
B2	!A1&A2&!B1&C1&C2	0.0100	ZN(LH)	0.0010	1.2256
B2	A1&!A2&!B1&!C1&C2	0.0100	ZN(LH)	0.0010	1.2292
B2	A1&!A2&!B1&C1&!C2	0.0100	ZN(LH)	0.0010	1.1212
B2	A1&!A2&!B1&C1&C2	0.0100	ZN(LH)	0.0010	1.1176
B2	A1&A2&!B1&!C1&C2	0.0100	ZN(LH)	0.0010	1.3195
B2	A1&A2&!B1&C1&!C2	0.0100	ZN(LH)	0.0010	1.2115
B2	A1&A2&!B1&C1&C2	0.0100	ZN(LH)	0.0010	1.2078
B1	!A1&A2&!B2&!C1&C2	0.0100	ZN(HL)	0.0010	0.3118
B1	!A1&A2&!B2&C1&!C2	0.0100	ZN(HL)	0.0010	0.2102
B1	!A1&A2&!B2&C1&C2	0.0100	ZN(HL)	0.0010	0.2102
B1	A1&!A2&!B2&!C1&C2	0.0100	ZN(HL)	0.0010	0.2081
B1	A1&!A2&!B2&C1&!C2	0.0100	ZN(HL)	0.0010	0.1066
B1	A1&!A2&!B2&C1&C2	0.0100	ZN(HL)	0.0010	0.1067
B1	A1&A2&!B2&!C1&C2	0.0100	ZN(HL)	0.0010	0.2085
B1	A1&A2&!B2&C1&!C2	0.0100	ZN(HL)	0.0010	0.1068
B1	A1&A2&!B2&C1&C2	0.0100	ZN(HL)	0.0010	0.1067
A2	!A1&!B1&B2&!C1&C2	0.0100	ZN(LH)	0.0010	0.9455
A2	!A1&!B1&B2&C1&!C2	0.0100	ZN(LH)	0.0010	0.8382
A2	!A1&!B1&B2&C1&C2	0.0100	ZN(LH)	0.0010	0.8380
A2	!A1&B1&!B2&!C1&C2	0.0100	ZN(LH)	0.0010	0.8387
A2	!A1&B1&!B2&C1&!C2	0.0100	ZN(LH)	0.0010	0.7309
A2	!A1&B1&!B2&C1&C2	0.0100	ZN(LH)	0.0010	0.7306
A2	!A1&B1&B2&!C1&C2	0.0100	ZN(LH)	0.0010	0.8360
A2	!A1&B1&B2&C1&!C2	0.0100	ZN(LH)	0.0010	0.7284
A2	!A1&B1&B2&C1&C2	0.0100	ZN(LH)	0.0010	0.7280
B1	!A1&A2&!B2&!C1&C2	0.0100	ZN(LH)	0.0010	1.2294
B1	!A1&A2&!B2&C1&!C2	0.0100	ZN(LH)	0.0010	1.1216
B1	!A1&A2&!B2&C1&C2	0.0100	ZN(LH)	0.0010	1.1179
B1	A1&!A2&!B2&!C1&C2	0.0100	ZN(LH)	0.0010	1.1217
B1	A1&!A2&!B2&C1&!C2	0.0100	ZN(LH)	0.0010	1.0141
B1	A1&!A2&!B2&C1&C2	0.0100	ZN(LH)	0.0010	1.0100
B1	A1&A2&!B2&!C1&C2	0.0100	ZN(LH)	0.0010	1.2120
B1	A1&A2&!B2&C1&!C2	0.0100	ZN(LH)	0.0010	1.1044
B1	A1&A2&!B2&C1&C2	0.0100	ZN(LH)	0.0010	1.1002
C1	!A1&A2&!B1&B2&!C2	0.0100	ZN(HL)	0.0010	0.3105
C1	!A1&A2&B1&!B2&!C2	0.0100	ZN(HL)	0.0010	0.2111

continues on next page

Table 92 – continued from previous page

C1	!A1&A2&B1&B2&!C2	0.0100	ZN(HL)	0.0010	0.2109
C1	A1&!A2&!B1&B2&!C2	0.0100	ZN(HL)	0.0010	0.2074
C1	A1&!A2&B1&!B2&!C2	0.0100	ZN(HL)	0.0010	0.1070
C1	A1&!A2&B1&B2&!C2	0.0100	ZN(HL)	0.0010	0.1068
C1	A1&A2&!B1&B2&!C2	0.0100	ZN(HL)	0.0010	0.2071
C1	A1&A2&B1&!B2&!C2	0.0100	ZN(HL)	0.0010	0.1072
C1	A1&A2&B1&B2&!C2	0.0100	ZN(HL)	0.0010	0.1071
A2	!A1&!B1&B2&!C1&C2	0.0100	ZN(HL)	0.0010	0.3994
A2	!A1&!B1&B2&C1&!C2	0.0100	ZN(HL)	0.0010	0.2984
A2	!A1&!B1&B2&C1&C2	0.0100	ZN(HL)	0.0010	0.2986
A2	!A1&B1&!B2&!C1&C2	0.0100	ZN(HL)	0.0010	0.3002
A2	!A1&B1&!B2&C1&!C2	0.0100	ZN(HL)	0.0010	0.1991
A2	!A1&B1&!B2&C1&C2	0.0100	ZN(HL)	0.0010	0.1989
A2	!A1&B1&B2&!C1&C2	0.0100	ZN(HL)	0.0010	0.3005
A2	!A1&B1&B2&C1&!C2	0.0100	ZN(HL)	0.0010	0.1991
A2	!A1&B1&B2&C1&C2	0.0100	ZN(HL)	0.0010	0.1989
C2	!A1&A2&!B1&B2&!C1	0.0100	ZN(HL)	0.0010	0.3983
C2	!A1&A2&B1&!B2&!C1	0.0100	ZN(HL)	0.0010	0.2988
C2	!A1&A2&B1&B2&!C1	0.0100	ZN(HL)	0.0010	0.2988
C2	A1&!A2&!B1&B2&!C1	0.0100	ZN(HL)	0.0010	0.2952
C2	A1&!A2&B1&!B2&!C1	0.0100	ZN(HL)	0.0010	0.1959
C2	A1&!A2&B1&B2&!C1	0.0100	ZN(HL)	0.0010	0.1957
C2	A1&A2&!B1&B2&!C1	0.0100	ZN(HL)	0.0010	0.2951
C2	A1&A2&B1&!B2&!C1	0.0100	ZN(HL)	0.0010	0.1960
C2	A1&A2&B1&B2&!C1	0.0100	ZN(HL)	0.0010	0.1958
C1	!A1&A2&!B1&B2&!C2	0.0100	ZN(LH)	0.0010	1.5638
C1	!A1&A2&B1&!B2&!C2	0.0100	ZN(LH)	0.0010	1.4568
C1	!A1&A2&B1&B2&!C2	0.0100	ZN(LH)	0.0010	1.5438
C1	A1&!A2&!B1&B2&!C2	0.0100	ZN(LH)	0.0010	1.4563
C1	A1&!A2&B1&!B2&!C2	0.0100	ZN(LH)	0.0010	1.3489
C1	A1&!A2&B1&B2&!C2	0.0100	ZN(LH)	0.0010	1.4363
C1	A1&A2&!B1&B2&!C2	0.0100	ZN(LH)	0.0010	1.5447
C1	A1&A2&B1&!B2&!C2	0.0100	ZN(LH)	0.0010	1.4376
C1	A1&A2&B1&B2&!C2	0.0100	ZN(LH)	0.0010	1.5250
C2	!A1&A2&!B1&B2&!C1	0.0100	ZN(LH)	0.0010	1.6715
C2	!A1&A2&B1&!B2&!C1	0.0100	ZN(LH)	0.0010	1.5644
C2	!A1&A2&B1&B2&!C1	0.0100	ZN(LH)	0.0010	1.6514
C2	A1&!A2&!B1&B2&!C1	0.0100	ZN(LH)	0.0010	1.5639
C2	A1&!A2&B1&!B2&!C1	0.0100	ZN(LH)	0.0010	1.4564
C2	A1&!A2&B1&B2&!C1	0.0100	ZN(LH)	0.0010	1.5439
C2	A1&A2&!B1&B2&!C1	0.0100	ZN(LH)	0.0010	1.6521
C2	A1&A2&B1&!B2&!C1	0.0100	ZN(LH)	0.0010	1.5447
C2	A1&A2&B1&B2&!C1	0.0100	ZN(LH)	0.0010	1.6323
A1	!A2&!B1&B2&!C1&C2	0.0100	ZN(HL)	0.0010	0.3094
A1	!A2&!B1&B2&C1&!C2	0.0100	ZN(HL)	0.0010	0.2079
A1	!A2&!B1&B2&C1&C2	0.0100	ZN(HL)	0.0010	0.2075
A1	!A2&B1&!B2&!C1&C2	0.0100	ZN(HL)	0.0010	0.2096
A1	!A2&B1&!B2&C1&!C2	0.0100	ZN(HL)	0.0010	0.1078
A1	!A2&B1&!B2&C1&C2	0.0100	ZN(HL)	0.0010	0.1075
A1	!A2&B1&B2&!C1&C2	0.0100	ZN(HL)	0.0010	0.2093
A1	!A2&B1&B2&C1&!C2	0.0100	ZN(HL)	0.0010	0.1075
A1	!A2&B1&B2&C1&C2	0.0100	ZN(HL)	0.0010	0.1073

continues on next page

Table 92 – continued from previous page

B2	!A1&A2&!B1&!C1&C2	0.0100	ZN(HL)	0.0010	0.3977
B2	!A1&A2&!B1&C1&!C2	0.0100	ZN(HL)	0.0010	0.2968
B2	!A1&A2&!B1&C1&C2	0.0100	ZN(HL)	0.0010	0.2968
B2	A1&!A2&!B1&!C1&C2	0.0100	ZN(HL)	0.0010	0.2947
B2	A1&!A2&!B1&C1&!C2	0.0100	ZN(HL)	0.0010	0.1944
B2	A1&!A2&!B1&C1&C2	0.0100	ZN(HL)	0.0010	0.1941
B2	A1&A2&!B1&!C1&C2	0.0100	ZN(HL)	0.0010	0.2949
B2	A1&A2&!B1&C1&!C2	0.0100	ZN(HL)	0.0010	0.1941
B2	A1&A2&!B1&C1&C2	0.0100	ZN(HL)	0.0010	0.1941
B2(LH)	!A1&!A2&!B1&!C1&!C2	0.0100	n/a	n/a	-0.1402
B2(LH)	!A1&!A2&!B1&!C1&C2	0.0100	n/a	n/a	-0.1404
B2(LH)	!A1&!A2&!B1&C1&!C2	0.0100	n/a	n/a	-0.1403
B2(LH)	!A1&!A2&!B1&C1&C2	0.0100	n/a	n/a	-0.1404
B2(LH)	!A1&!A2&B1&!C1&!C2	0.0100	n/a	n/a	-0.1361
B2(LH)	!A1&!A2&B1&!C1&C2	0.0100	n/a	n/a	-0.1361
B2(LH)	!A1&!A2&B1&C1&!C2	0.0100	n/a	n/a	-0.1361
B2(LH)	!A1&!A2&B1&C1&C2	0.0100	n/a	n/a	-0.1361
B2(LH)	!A1&A2&!B1&!C1&!C2	0.0100	n/a	n/a	0.0683
B2(LH)	!A1&A2&B1&!C1&!C2	0.0100	n/a	n/a	-0.1361
B2(LH)	A1&!A2&!B1&!C1&!C2	0.0100	n/a	n/a	0.0682
B2(LH)	A1&!A2&B1&!C1&!C2	0.0100	n/a	n/a	-0.1361
B2(LH)	A1&A2&!B1&!C1&!C2	0.0100	n/a	n/a	0.0685
B2(LH)	A1&A2&B1&!C1&!C2	0.0100	n/a	n/a	-0.1361
B2(LH)	!A1&A2&B1&!C1&C2	0.0100	n/a	n/a	-0.1174
B2(LH)	!A1&A2&B1&C1&!C2	0.0100	n/a	n/a	-0.1173
B2(LH)	!A1&A2&B1&C1&C2	0.0100	n/a	n/a	-0.1173
B2(LH)	A1&!A2&B1&!C1&C2	0.0100	n/a	n/a	-0.1174
B2(LH)	A1&!A2&B1&C1&!C2	0.0100	n/a	n/a	-0.1174
B2(LH)	A1&!A2&B1&C1&C2	0.0100	n/a	n/a	-0.1173
B2(LH)	A1&A2&B1&!C1&C2	0.0100	n/a	n/a	-0.1173
B2(LH)	A1&A2&B1&C1&!C2	0.0100	n/a	n/a	-0.1173
B2(LH)	A1&A2&B1&C1&C2	0.0100	n/a	n/a	-0.1173
C2(HL)	!A1&!A2&!B1&!B2&!C1	0.0100	n/a	n/a	0.1411
C2(HL)	!A1&!A2&!B1&!B2&C1	0.0100	n/a	n/a	0.1408
C2(HL)	!A1&!A2&!B1&B2&!C1	0.0100	n/a	n/a	0.1416
C2(HL)	!A1&!A2&!B1&B2&C1	0.0100	n/a	n/a	0.1408
C2(HL)	!A1&!A2&B1&!B2&!C1	0.0100	n/a	n/a	0.1416
C2(HL)	!A1&!A2&B1&!B2&C1	0.0100	n/a	n/a	0.1408
C2(HL)	!A1&!A2&B1&B2&!C1	0.0100	n/a	n/a	0.1415
C2(HL)	!A1&!A2&B1&B2&C1	0.0100	n/a	n/a	0.1408
C2(HL)	!A1&A2&!B1&!B2&!C1	0.0100	n/a	n/a	0.1432
C2(HL)	!A1&A2&!B1&!B2&C1	0.0100	n/a	n/a	0.1408
C2(HL)	A1&!A2&!B1&!B2&!C1	0.0100	n/a	n/a	0.1432
C2(HL)	A1&!A2&!B1&!B2&C1	0.0100	n/a	n/a	0.1408
C2(HL)	A1&A2&!B1&!B2&!C1	0.0100	n/a	n/a	0.1431
C2(HL)	A1&A2&!B1&!B2&C1	0.0100	n/a	n/a	0.1408
C2(HL)	!A1&A2&!B1&B2&C1	0.0100	n/a	n/a	0.1408
C2(HL)	!A1&A2&B1&!B2&C1	0.0100	n/a	n/a	0.1407
C2(HL)	!A1&A2&B1&B2&C1	0.0100	n/a	n/a	0.1408
C2(HL)	A1&!A2&!B1&B2&C1	0.0100	n/a	n/a	0.1408
C2(HL)	A1&!A2&B1&!B2&C1	0.0100	n/a	n/a	0.1408
C2(HL)	A1&!A2&B1&B2&C1	0.0100	n/a	n/a	0.1408

continues on next page

Table 92 – continued from previous page

C2(HL)	A1&A2&!B1&B2&C1	0.0100	n/a	n/a	0.1408
C2(HL)	A1&A2&B1&!B2&C1	0.0100	n/a	n/a	0.1408
C2(HL)	A1&A2&B1&B2&C1	0.0100	n/a	n/a	0.1408
B2(HL)	!A1&!A2&!B1&!C1&!C2	0.0100	n/a	n/a	0.1847
B2(HL)	!A1&!A2&!B1&!C1&C2	0.0100	n/a	n/a	0.1677
B2(HL)	!A1&!A2&!B1&C1&!C2	0.0100	n/a	n/a	0.1678
B2(HL)	!A1&!A2&!B1&C1&C2	0.0100	n/a	n/a	0.1645
B2(HL)	!A1&!A2&B1&!C1&!C2	0.0100	n/a	n/a	0.1893
B2(HL)	!A1&!A2&B1&!C1&C2	0.0100	n/a	n/a	0.1408
B2(HL)	!A1&!A2&B1&C1&!C2	0.0100	n/a	n/a	0.1408
B2(HL)	!A1&!A2&B1&C1&C2	0.0100	n/a	n/a	0.1407
B2(HL)	!A1&A2&!B1&!C1&!C2	0.0100	n/a	n/a	0.1476
B2(HL)	!A1&A2&B1&!C1&!C2	0.0100	n/a	n/a	0.1499
B2(HL)	A1&!A2&!B1&!C1&!C2	0.0100	n/a	n/a	0.1476
B2(HL)	A1&!A2&B1&!C1&!C2	0.0100	n/a	n/a	0.1499
B2(HL)	A1&A2&!B1&!C1&!C2	0.0100	n/a	n/a	0.1474
B2(HL)	A1&A2&B1&!C1&!C2	0.0100	n/a	n/a	0.1496
B2(HL)	!A1&A2&B1&!C1&C2	0.0100	n/a	n/a	0.1407
B2(HL)	!A1&A2&B1&C1&!C2	0.0100	n/a	n/a	0.1407
B2(HL)	!A1&A2&B1&C1&C2	0.0100	n/a	n/a	0.1407
B2(HL)	A1&!A2&B1&!C1&C2	0.0100	n/a	n/a	0.1407
B2(HL)	A1&!A2&B1&C1&!C2	0.0100	n/a	n/a	0.1407
B2(HL)	A1&!A2&B1&C1&C2	0.0100	n/a	n/a	0.1407
B2(HL)	A1&A2&B1&!C1&C2	0.0100	n/a	n/a	0.1406
B2(HL)	A1&A2&B1&C1&!C2	0.0100	n/a	n/a	0.1406
B2(HL)	A1&A2&B1&C1&C2	0.0100	n/a	n/a	0.1406
C2(LH)	!A1&!A2&!B1&!B2&!C1	0.0100	n/a	n/a	-0.1405
C2(LH)	!A1&!A2&!B1&!B2&C1	0.0100	n/a	n/a	-0.1360
C2(LH)	!A1&!A2&!B1&B2&!C1	0.0100	n/a	n/a	-0.1405
C2(LH)	!A1&!A2&!B1&B2&C1	0.0100	n/a	n/a	-0.1360
C2(LH)	!A1&!A2&B1&!B2&!C1	0.0100	n/a	n/a	-0.1405
C2(LH)	!A1&!A2&B1&!B2&C1	0.0100	n/a	n/a	-0.1360
C2(LH)	!A1&!A2&B1&B2&!C1	0.0100	n/a	n/a	-0.1404
C2(LH)	!A1&!A2&B1&B2&C1	0.0100	n/a	n/a	-0.1360
C2(LH)	!A1&A2&!B1&!B2&!C1	0.0100	n/a	n/a	-0.1406
C2(LH)	!A1&A2&!B1&!B2&C1	0.0100	n/a	n/a	-0.1360
C2(LH)	A1&!A2&!B1&!B2&!C1	0.0100	n/a	n/a	-0.1405
C2(LH)	A1&!A2&!B1&!B2&C1	0.0100	n/a	n/a	-0.1360
C2(LH)	A1&A2&!B1&!B2&!C1	0.0100	n/a	n/a	-0.1405
C2(LH)	A1&A2&!B1&!B2&C1	0.0100	n/a	n/a	-0.1360
C2(LH)	!A1&A2&!B1&B2&C1	0.0100	n/a	n/a	-0.1172
C2(LH)	!A1&A2&B1&!B2&C1	0.0100	n/a	n/a	-0.1172
C2(LH)	!A1&A2&B1&B2&C1	0.0100	n/a	n/a	-0.1172
C2(LH)	A1&!A2&!B1&B2&C1	0.0100	n/a	n/a	-0.1172
C2(LH)	A1&!A2&B1&!B2&C1	0.0100	n/a	n/a	-0.1172
C2(LH)	A1&!A2&B1&B2&C1	0.0100	n/a	n/a	-0.1172
C2(LH)	A1&A2&!B1&B2&C1	0.0100	n/a	n/a	-0.1172
C2(LH)	A1&A2&B1&!B2&C1	0.0100	n/a	n/a	-0.1172
C2(LH)	A1&A2&B1&B2&C1	0.0100	n/a	n/a	-0.1172
A2(LH)	!A1&!B1&!B2&!C1&!C2	0.0100	n/a	n/a	0.1252
A2(LH)	!A1&!B1&!B2&!C1&C2	0.0100	n/a	n/a	0.1254
A2(LH)	!A1&!B1&!B2&C1&!C2	0.0100	n/a	n/a	0.1254

continues on next page

Table 92 – continued from previous page

A2(LH)	!A1&!B1&!B2&C1&C2	0.0100	n/a	n/a	0.1253
A2(LH)	!A1&!B1&B2&!C1&!C2	0.0100	n/a	n/a	0.4732
A2(LH)	!A1&B1&!B2&!C1&!C2	0.0100	n/a	n/a	0.4732
A2(LH)	!A1&B1&B2&!C1&!C2	0.0100	n/a	n/a	0.5576
A2(LH)	A1&!B1&!B2&!C1&!C2	0.0100	n/a	n/a	-0.1542
A2(LH)	A1&!B1&!B2&!C1&C2	0.0100	n/a	n/a	-0.1542
A2(LH)	A1&!B1&!B2&C1&!C2	0.0100	n/a	n/a	-0.1542
A2(LH)	A1&!B1&!B2&C1&C2	0.0100	n/a	n/a	-0.1542
A2(LH)	A1&!B1&B2&!C1&!C2	0.0100	n/a	n/a	-0.1542
A2(LH)	A1&B1&!B2&!C1&!C2	0.0100	n/a	n/a	-0.1542
A2(LH)	A1&B1&B2&!C1&!C2	0.0100	n/a	n/a	-0.1542
A2(LH)	A1&!B1&B2&!C1&C2	0.0100	n/a	n/a	-0.1171
A2(LH)	A1&!B1&B2&C1&!C2	0.0100	n/a	n/a	-0.1171
A2(LH)	A1&!B1&B2&C1&C2	0.0100	n/a	n/a	-0.1171
A2(LH)	A1&B1&!B2&!C1&C2	0.0100	n/a	n/a	-0.1171
A2(LH)	A1&B1&!B2&C1&!C2	0.0100	n/a	n/a	-0.1171
A2(LH)	A1&B1&!B2&C1&C2	0.0100	n/a	n/a	-0.1171
A2(LH)	A1&B1&B2&!C1&C2	0.0100	n/a	n/a	-0.1171
A2(LH)	A1&B1&B2&C1&!C2	0.0100	n/a	n/a	-0.1171
A2(LH)	A1&B1&B2&C1&C2	0.0100	n/a	n/a	-0.1170
A1(LH)	!A2&!B1&!B2&!C1&!C2	0.0100	n/a	n/a	0.1242
A1(LH)	!A2&!B1&!B2&!C1&C2	0.0100	n/a	n/a	0.1243
A1(LH)	!A2&!B1&!B2&C1&!C2	0.0100	n/a	n/a	0.1242
A1(LH)	!A2&!B1&!B2&C1&C2	0.0100	n/a	n/a	0.1242
A1(LH)	!A2&!B1&B2&!C1&!C2	0.0100	n/a	n/a	0.4720
A1(LH)	!A2&B1&!B2&!C1&!C2	0.0100	n/a	n/a	0.4720
A1(LH)	!A2&B1&B2&!C1&!C2	0.0100	n/a	n/a	0.5564
A1(LH)	A2&!B1&!B2&!C1&!C2	0.0100	n/a	n/a	-0.1557
A1(LH)	A2&!B1&!B2&!C1&C2	0.0100	n/a	n/a	-0.1554
A1(LH)	A2&!B1&!B2&C1&!C2	0.0100	n/a	n/a	-0.1554
A1(LH)	A2&!B1&!B2&C1&C2	0.0100	n/a	n/a	-0.1554
A1(LH)	A2&!B1&B2&!C1&!C2	0.0100	n/a	n/a	-0.1553
A1(LH)	A2&B1&!B2&!C1&!C2	0.0100	n/a	n/a	-0.1555
A1(LH)	A2&B1&B2&!C1&!C2	0.0100	n/a	n/a	-0.1555
A1(LH)	A2&!B1&B2&!C1&C2	0.0100	n/a	n/a	-0.0403
A1(LH)	A2&!B1&B2&C1&!C2	0.0100	n/a	n/a	-0.0403
A1(LH)	A2&!B1&B2&C1&C2	0.0100	n/a	n/a	-0.0403
A1(LH)	A2&B1&!B2&!C1&C2	0.0100	n/a	n/a	-0.0403
A1(LH)	A2&B1&!B2&C1&!C2	0.0100	n/a	n/a	-0.0403
A1(LH)	A2&B1&!B2&C1&C2	0.0100	n/a	n/a	-0.0403
A1(LH)	A2&B1&B2&!C1&C2	0.0100	n/a	n/a	-0.0403
A1(LH)	A2&B1&B2&C1&!C2	0.0100	n/a	n/a	-0.0403
A1(LH)	A2&B1&B2&C1&C2	0.0100	n/a	n/a	-0.0403
C1(LH)	!A1&!A2&!B1&!B2&!C2	0.0100	n/a	n/a	-0.1416
C1(LH)	!A1&!A2&!B1&!B2&C2	0.0100	n/a	n/a	-0.1376
C1(LH)	!A1&!A2&!B1&B2&!C2	0.0100	n/a	n/a	-0.1415
C1(LH)	!A1&!A2&!B1&B2&C2	0.0100	n/a	n/a	-0.1374
C1(LH)	!A1&!A2&B1&!B2&!C2	0.0100	n/a	n/a	-0.1415
C1(LH)	!A1&!A2&B1&!B2&C2	0.0100	n/a	n/a	-0.1374
C1(LH)	!A1&!A2&B1&B2&!C2	0.0100	n/a	n/a	-0.1415
C1(LH)	!A1&!A2&B1&B2&C2	0.0100	n/a	n/a	-0.1374
C1(LH)	!A1&A2&!B1&!B2&!C2	0.0100	n/a	n/a	-0.1415

continues on next page

Table 92 – continued from previous page

C1(LH)	!A1&A2&!B1&!B2&C2	0.0100	n/a	n/a	-0.1373
C1(LH)	A1&!A2&!B1&!B2&!C2	0.0100	n/a	n/a	-0.1415
C1(LH)	A1&!A2&!B1&!B2&C2	0.0100	n/a	n/a	-0.1373
C1(LH)	A1&A2&!B1&!B2&!C2	0.0100	n/a	n/a	-0.1415
C1(LH)	A1&A2&!B1&!B2&C2	0.0100	n/a	n/a	-0.1374
C1(LH)	!A1&A2&!B1&B2&C2	0.0100	n/a	n/a	-0.0403
C1(LH)	!A1&A2&B1&!B2&C2	0.0100	n/a	n/a	-0.0402
C1(LH)	!A1&A2&B1&B2&C2	0.0100	n/a	n/a	-0.0403
C1(LH)	A1&!A2&!B1&B2&C2	0.0100	n/a	n/a	-0.0402
C1(LH)	A1&!A2&B1&!B2&C2	0.0100	n/a	n/a	-0.0402
C1(LH)	A1&!A2&B1&B2&C2	0.0100	n/a	n/a	-0.0403
C1(LH)	A1&A2&!B1&B2&C2	0.0100	n/a	n/a	-0.0403
C1(LH)	A1&A2&B1&!B2&C2	0.0100	n/a	n/a	-0.0402
C1(LH)	A1&A2&B1&B2&C2	0.0100	n/a	n/a	-0.0403
A2(HL)	!A1&!B1&!B2&!C1&!C2	0.0100	n/a	n/a	0.1589
A2(HL)	!A1&!B1&!B2&!C1&C2	0.0100	n/a	n/a	0.1589
A2(HL)	!A1&!B1&!B2&C1&!C2	0.0100	n/a	n/a	0.1589
A2(HL)	!A1&!B1&!B2&C1&C2	0.0100	n/a	n/a	0.1589
A2(HL)	!A1&!B1&B2&!C1&!C2	0.0100	n/a	n/a	0.1589
A2(HL)	!A1&B1&!B2&!C1&!C2	0.0100	n/a	n/a	0.1589
A2(HL)	!A1&B1&B2&!C1&!C2	0.0100	n/a	n/a	0.1589
A2(HL)	A1&!B1&!B2&!C1&!C2	0.0100	n/a	n/a	0.1626
A2(HL)	A1&!B1&!B2&!C1&C2	0.0100	n/a	n/a	0.1626
A2(HL)	A1&!B1&!B2&C1&!C2	0.0100	n/a	n/a	0.1626
A2(HL)	A1&!B1&!B2&C1&C2	0.0100	n/a	n/a	0.1626
A2(HL)	A1&!B1&B2&!C1&!C2	0.0100	n/a	n/a	0.1632
A2(HL)	A1&B1&!B2&!C1&!C2	0.0100	n/a	n/a	0.1632
A2(HL)	A1&B1&B2&!C1&!C2	0.0100	n/a	n/a	0.1626
A2(HL)	A1&!B1&B2&!C1&C2	0.0100	n/a	n/a	0.1406
A2(HL)	A1&!B1&B2&C1&!C2	0.0100	n/a	n/a	0.1406
A2(HL)	A1&!B1&B2&C1&C2	0.0100	n/a	n/a	0.1406
A2(HL)	A1&B1&!B2&!C1&C2	0.0100	n/a	n/a	0.1406
A2(HL)	A1&B1&!B2&C1&!C2	0.0100	n/a	n/a	0.1406
A2(HL)	A1&B1&!B2&C1&C2	0.0100	n/a	n/a	0.1406
A2(HL)	A1&B1&B2&!C1&C2	0.0100	n/a	n/a	0.1406
A2(HL)	A1&B1&B2&C1&!C2	0.0100	n/a	n/a	0.1406
A2(HL)	A1&B1&B2&C1&C2	0.0100	n/a	n/a	0.1406
B1(HL)	!A1&!A2&!B2&!C1&!C2	0.0100	n/a	n/a	0.1851
B1(HL)	!A1&!A2&!B2&!C1&C2	0.0100	n/a	n/a	0.1683
B1(HL)	!A1&!A2&!B2&C1&!C2	0.0100	n/a	n/a	0.1682
B1(HL)	!A1&!A2&!B2&C1&C2	0.0100	n/a	n/a	0.1651
B1(HL)	!A1&!A2&B2&!C1&!C2	0.0100	n/a	n/a	0.1890
B1(HL)	!A1&!A2&B2&!C1&C2	0.0100	n/a	n/a	0.1412
B1(HL)	!A1&!A2&B2&C1&!C2	0.0100	n/a	n/a	0.1411
B1(HL)	!A1&!A2&B2&C1&C2	0.0100	n/a	n/a	0.1412
B1(HL)	!A1&A2&!B2&!C1&!C2	0.0100	n/a	n/a	0.1482
B1(HL)	!A1&A2&B2&!C1&!C2	0.0100	n/a	n/a	0.1506
B1(HL)	A1&!A2&!B2&!C1&!C2	0.0100	n/a	n/a	0.1482
B1(HL)	A1&!A2&B2&!C1&!C2	0.0100	n/a	n/a	0.1505
B1(HL)	A1&A2&!B2&!C1&!C2	0.0100	n/a	n/a	0.1480
B1(HL)	A1&A2&B2&!C1&!C2	0.0100	n/a	n/a	0.1502
B1(HL)	!A1&A2&B2&!C1&C2	0.0100	n/a	n/a	0.1058

continues on next page

Table 92 – continued from previous page

B1(HL)	!A1&A2&B2&C1&!C2	0.0100	n/a	n/a	0.1058
B1(HL)	!A1&A2&B2&C1&C2	0.0100	n/a	n/a	0.1057
B1(HL)	A1&!A2&B2&!C1&C2	0.0100	n/a	n/a	0.1058
B1(HL)	A1&!A2&B2&C1&!C2	0.0100	n/a	n/a	0.1058
B1(HL)	A1&!A2&B2&C1&C2	0.0100	n/a	n/a	0.1058
B1(HL)	A1&A2&B2&!C1&C2	0.0100	n/a	n/a	0.1057
B1(HL)	A1&A2&B2&C1&!C2	0.0100	n/a	n/a	0.1057
B1(HL)	A1&A2&B2&C1&C2	0.0100	n/a	n/a	0.1058
C1(HL)	!A1&!A2&!B1&!B2&!C2	0.0100	n/a	n/a	0.1416
C1(HL)	!A1&!A2&!B1&!B2&C2	0.0100	n/a	n/a	0.1411
C1(HL)	!A1&!A2&!B1&B2&!C2	0.0100	n/a	n/a	0.1421
C1(HL)	!A1&!A2&!B1&B2&C2	0.0100	n/a	n/a	0.1413
C1(HL)	!A1&!A2&B1&!B2&!C2	0.0100	n/a	n/a	0.1421
C1(HL)	!A1&!A2&B1&!B2&C2	0.0100	n/a	n/a	0.1412
C1(HL)	!A1&!A2&B1&B2&!C2	0.0100	n/a	n/a	0.1419
C1(HL)	!A1&!A2&B1&B2&C2	0.0100	n/a	n/a	0.1412
C1(HL)	!A1&A2&!B1&!B2&!C2	0.0100	n/a	n/a	0.1437
C1(HL)	!A1&A2&!B1&!B2&C2	0.0100	n/a	n/a	0.1412
C1(HL)	A1&!A2&!B1&!B2&!C2	0.0100	n/a	n/a	0.1437
C1(HL)	A1&!A2&!B1&!B2&C2	0.0100	n/a	n/a	0.1411
C1(HL)	A1&A2&!B1&!B2&!C2	0.0100	n/a	n/a	0.1436
C1(HL)	A1&A2&!B1&!B2&C2	0.0100	n/a	n/a	0.1411
C1(HL)	!A1&A2&!B1&B2&C2	0.0100	n/a	n/a	0.1073
C1(HL)	!A1&A2&B1&!B2&C2	0.0100	n/a	n/a	0.1073
C1(HL)	!A1&A2&B1&B2&C2	0.0100	n/a	n/a	0.1074
C1(HL)	A1&!A2&!B1&B2&C2	0.0100	n/a	n/a	0.1073
C1(HL)	A1&!A2&B1&!B2&C2	0.0100	n/a	n/a	0.1073
C1(HL)	A1&!A2&B1&B2&C2	0.0100	n/a	n/a	0.1074
C1(HL)	A1&A2&!B1&B2&C2	0.0100	n/a	n/a	0.1073
C1(HL)	A1&A2&B1&!B2&C2	0.0100	n/a	n/a	0.1073
C1(HL)	A1&A2&B1&B2&C2	0.0100	n/a	n/a	0.1074
A1(HL)	!A2&!B1&!B2&!C1&!C2	0.0100	n/a	n/a	0.1597
A1(HL)	!A2&!B1&!B2&!C1&C2	0.0100	n/a	n/a	0.1597
A1(HL)	!A2&!B1&!B2&C1&!C2	0.0100	n/a	n/a	0.1597
A1(HL)	!A2&!B1&!B2&C1&C2	0.0100	n/a	n/a	0.1597
A1(HL)	!A2&!B1&B2&!C1&!C2	0.0100	n/a	n/a	0.1598
A1(HL)	!A2&B1&!B2&!C1&!C2	0.0100	n/a	n/a	0.1597
A1(HL)	!A2&B1&B2&!C1&!C2	0.0100	n/a	n/a	0.1597
A1(HL)	A2&!B1&!B2&!C1&!C2	0.0100	n/a	n/a	0.1630
A1(HL)	A2&!B1&!B2&!C1&C2	0.0100	n/a	n/a	0.1630
A1(HL)	A2&!B1&!B2&C1&!C2	0.0100	n/a	n/a	0.1629
A1(HL)	A2&!B1&!B2&C1&C2	0.0100	n/a	n/a	0.1629
A1(HL)	A2&!B1&B2&!C1&!C2	0.0100	n/a	n/a	0.1636
A1(HL)	A2&B1&!B2&!C1&!C2	0.0100	n/a	n/a	0.1635
A1(HL)	A2&B1&B2&!C1&!C2	0.0100	n/a	n/a	0.1629
A1(HL)	A2&!B1&B2&!C1&C2	0.0100	n/a	n/a	0.1094
A1(HL)	A2&!B1&B2&C1&!C2	0.0100	n/a	n/a	0.1094
A1(HL)	A2&!B1&B2&C1&C2	0.0100	n/a	n/a	0.1094
A1(HL)	A2&B1&!B2&!C1&C2	0.0100	n/a	n/a	0.1094
A1(HL)	A2&B1&!B2&C1&!C2	0.0100	n/a	n/a	0.1094
A1(HL)	A2&B1&!B2&C1&C2	0.0100	n/a	n/a	0.1094
A1(HL)	A2&B1&B2&!C1&C2	0.0100	n/a	n/a	0.1094

continues on next page

Table 92 – continued from previous page

A1(HL)	A2&B1&B2&C1&!C2	0.0100	n/a	n/a	0.1094
A1(HL)	A2&B1&B2&C1&C2	0.0100	n/a	n/a	0.1094
B1(LH)	!A1&!A2&!B2&!C1&!C2	0.0100	n/a	n/a	-0.1418
B1(LH)	!A1&!A2&!B2&!C1&C2	0.0100	n/a	n/a	-0.1416
B1(LH)	!A1&!A2&!B2&C1&!C2	0.0100	n/a	n/a	-0.1416
B1(LH)	!A1&!A2&!B2&C1&C2	0.0100	n/a	n/a	-0.1416
B1(LH)	!A1&!A2&B2&!C1&!C2	0.0100	n/a	n/a	-0.1377
B1(LH)	!A1&!A2&B2&!C1&C2	0.0100	n/a	n/a	-0.1375
B1(LH)	!A1&!A2&B2&C1&!C2	0.0100	n/a	n/a	-0.1374
B1(LH)	!A1&!A2&B2&C1&C2	0.0100	n/a	n/a	-0.1375
B1(LH)	!A1&A2&!B2&!C1&!C2	0.0100	n/a	n/a	0.0673
B1(LH)	!A1&A2&B2&!C1&!C2	0.0100	n/a	n/a	-0.1376
B1(LH)	A1&!A2&!B2&!C1&!C2	0.0100	n/a	n/a	0.0672
B1(LH)	A1&!A2&B2&!C1&!C2	0.0100	n/a	n/a	-0.1375
B1(LH)	A1&A2&!B2&!C1&!C2	0.0100	n/a	n/a	0.0675
B1(LH)	A1&A2&B2&!C1&!C2	0.0100	n/a	n/a	-0.1375
B1(LH)	!A1&A2&B2&!C1&C2	0.0100	n/a	n/a	-0.0404
B1(LH)	!A1&A2&B2&C1&!C2	0.0100	n/a	n/a	-0.0404
B1(LH)	!A1&A2&B2&C1&C2	0.0100	n/a	n/a	-0.0404
B1(LH)	A1&!A2&B2&!C1&C2	0.0100	n/a	n/a	-0.0404
B1(LH)	A1&!A2&B2&C1&!C2	0.0100	n/a	n/a	-0.0403
B1(LH)	A1&!A2&B2&C1&C2	0.0100	n/a	n/a	-0.0404
B1(LH)	A1&A2&B2&!C1&C2	0.0100	n/a	n/a	-0.0404
B1(LH)	A1&A2&B2&C1&!C2	0.0100	n/a	n/a	-0.0403
B1(LH)	A1&A2&B2&C1&C2	0.0100	n/a	n/a	-0.0403

LEAKAGE POWER

When Condition	Power (nW)
!A1&!A2&!B1&!B2&!C1&!C2	0.2517
!A1&!A2&!B1&!B2&!C1&C2	0.2518
!A1&!A2&!B1&!B2&C1&!C2	0.2518
!A1&!A2&!B1&!B2&C1&C2	0.2518
!A1&!A2&!B1&B2&!C1&!C2	0.2522
!A1&!A2&!B1&B2&!C1&C2	0.2536
!A1&!A2&!B1&B2&C1&!C2	0.2536
!A1&!A2&!B1&B2&C1&C2	0.2536
!A1&!A2&B1&!B2&!C1&!C2	0.2522
!A1&!A2&B1&!B2&!C1&C2	0.2536
!A1&!A2&B1&!B2&C1&!C2	0.2536
!A1&!A2&B1&!B2&C1&C2	0.2536
!A1&!A2&B1&B2&!C1&!C2	0.2522
!A1&!A2&B1&B2&!C1&C2	0.2536
!A1&!A2&B1&B2&C1&!C2	0.2536
!A1&!A2&B1&B2&C1&C2	0.2536
!A1&A2&!B1&!B2&!C1&!C2	0.5700
!A1&A2&!B1&!B2&!C1&C2	0.5713

continues on next page

Table 93 – continued from previous page

!A1&A2&!B1&!B2&C1&!C2	0.5713
!A1&A2&!B1&!B2&C1&C2	0.5713
!A1&A2&!B1&B2&!C1&!C2	0.8819
!A1&A2&B1&!B2&!C1&!C2	0.8819
!A1&A2&B1&B2&!C1&!C2	0.8832
A1&!A2&!B1&!B2&!C1&!C2	0.5700
A1&!A2&!B1&!B2&!C1&C2	0.5713
A1&!A2&!B1&!B2&C1&!C2	0.5713
A1&!A2&!B1&!B2&C1&C2	0.5713
A1&!A2&!B1&B2&!C1&!C2	0.8819
A1&!A2&B1&!B2&!C1&!C2	0.8819
A1&!A2&B1&B2&!C1&!C2	0.8832
A1&A2&!B1&!B2&!C1&!C2	0.5716
A1&A2&!B1&!B2&!C1&C2	0.5729
A1&A2&!B1&!B2&C1&!C2	0.5729
A1&A2&!B1&!B2&C1&C2	0.5729
A1&A2&!B1&B2&!C1&!C2	0.8838
A1&A2&B1&!B2&!C1&!C2	0.8838
A1&A2&B1&B2&!C1&!C2	0.8851
!A1&A2&!B1&B2&!C1&C2	0.7953
!A1&A2&!B1&B2&C1&!C2	0.6525
!A1&A2&!B1&B2&C1&C2	0.6525
!A1&A2&B1&!B2&!C1&C2	0.6525
!A1&A2&B1&!B2&C1&!C2	0.5097
!A1&A2&B1&!B2&C1&C2	0.5097
!A1&A2&B1&B2&!C1&C2	0.6525
!A1&A2&B1&B2&C1&!C2	0.5097
!A1&A2&B1&B2&C1&C2	0.5097
A1&!A2&!B1&B2&!C1&C2	0.6525
A1&!A2&!B1&B2&C1&!C2	0.5097
A1&!A2&!B1&B2&C1&C2	0.5097
A1&!A2&B1&!B2&!C1&C2	0.5097
A1&!A2&B1&!B2&C1&!C2	0.3670
A1&!A2&B1&!B2&C1&C2	0.3670
A1&!A2&B1&B2&!C1&C2	0.5097
A1&!A2&B1&B2&C1&!C2	0.3670
A1&!A2&B1&B2&C1&C2	0.3670
A1&A2&!B1&B2&!C1&C2	0.6525
A1&A2&!B1&B2&C1&!C2	0.5097
A1&A2&!B1&B2&C1&C2	0.5097
A1&A2&B1&!B2&!C1&C2	0.5097
A1&A2&B1&!B2&C1&!C2	0.3670
A1&A2&B1&!B2&C1&C2	0.3670
A1&A2&B1&B2&!C1&C2	0.5097
A1&A2&B1&B2&C1&!C2	0.3670
A1&A2&B1&B2&C1&C2	0.3670

gf180mcu_fd_sc_mcu7t5v0__oai31_1

gf180mcu_fd_sc_mcu7t5v0__oai31_1 symbol

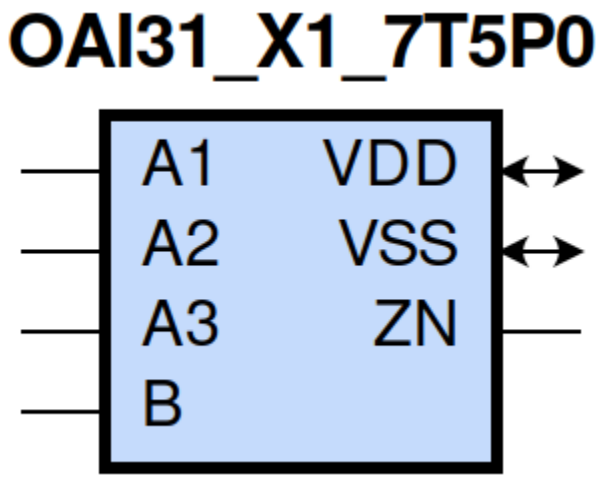

gf180mcu_fd_sc_mcu7t5v0__oai31_1 schematic

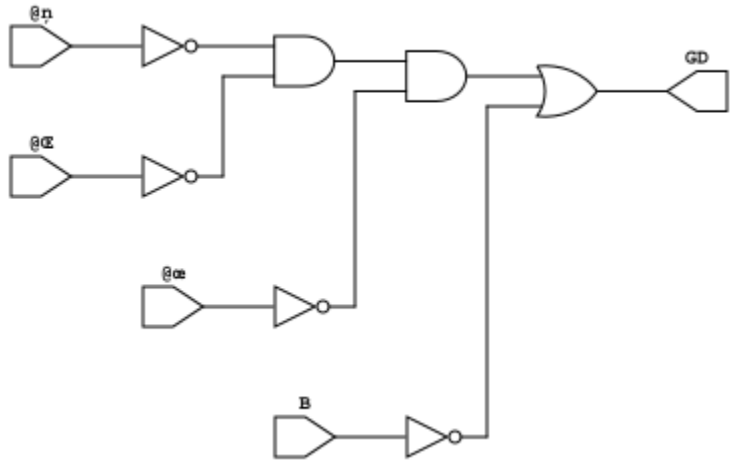

gf180mcu_fd_sc_mcu7t5v0__oai31_1 layout

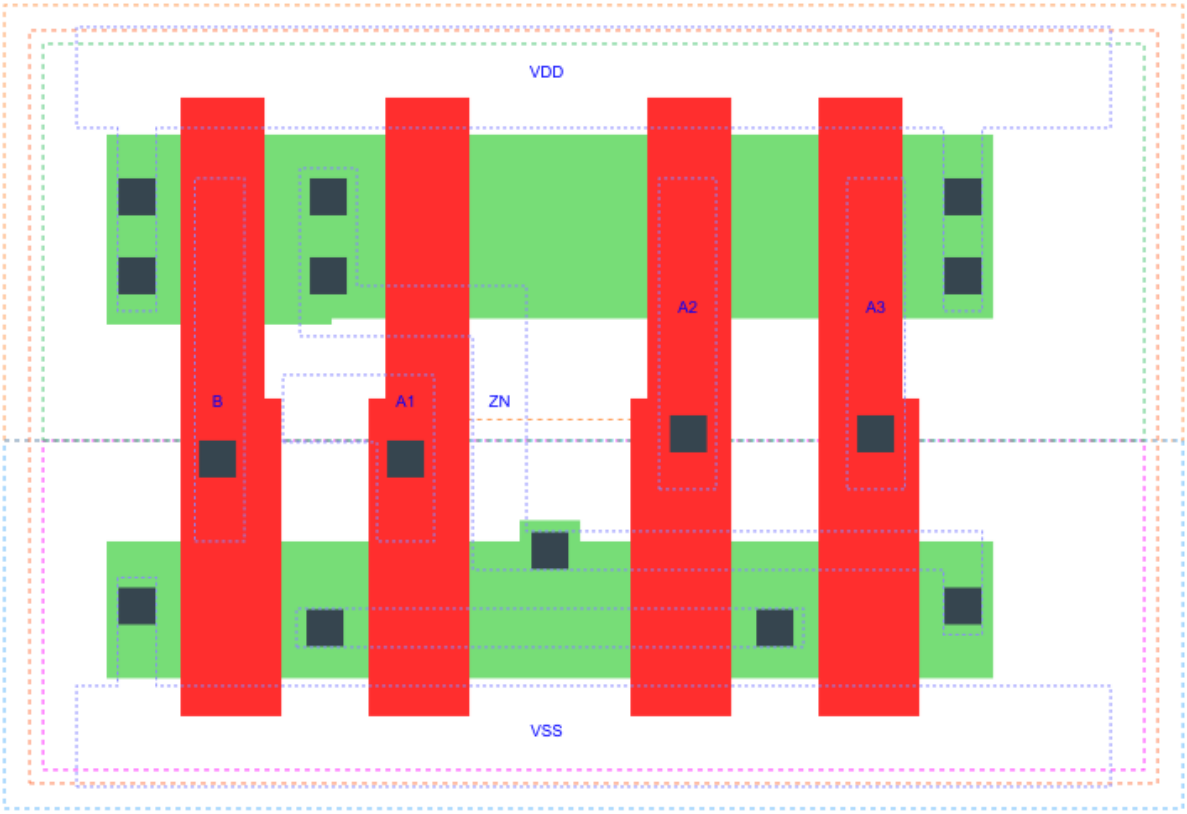

OAI31_X1 is a 3-input OR into 2-input NAND, NAND[OR(A1,A2,A3),B], 1X drive strength

Attributes

Attribute	Value
area	24.147200 μm^2

OUTPUT FUNCTIONS

Output Pin	Function
ZN	(((!A1)&(!A2)&(!A3))|(!B))

TRUTH TABLE FOR ZN

A1	A2	A3	B	ZN
0	0	0	?	1
?	?	?	0	1
1	?	?	1	0
?	1	?	1	0
?	?	1	1	0

FUNCTIONAL SCHEMATIC

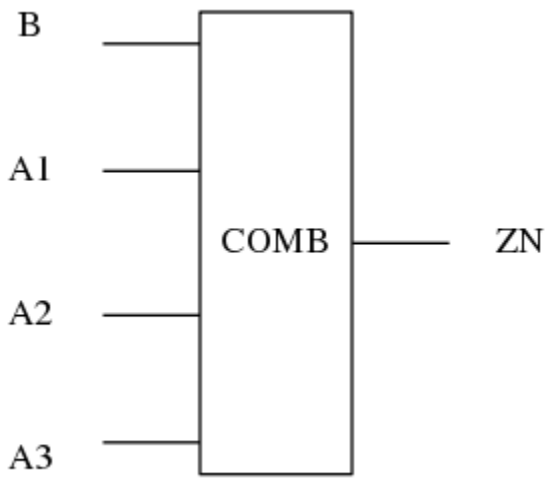

PIN CAPACITANCE (pf)

Pin	Type	Capacitance (pf)
B	input	0.0047
A1	input	0.0047
A2	input	0.0043
A3	input	0.0044

DELAY AND OUTPUT TRANSITION TIME corresponding to min slew and load

Input Pin	Output	When Condition	Tin (ns)	Out Load (pf)	Delay (ns)	Tout (ns)
B(LH)	ZN(HL)	!A1&!A2&A3	0.0100	0.0010	0.1359	0.0807
B(LH)	ZN(HL)	!A1&A2&!A3	0.0100	0.0010	0.1274	0.0696
B(LH)	ZN(HL)	!A1&A2&A3	0.0100	0.0010	0.1045	0.0603
B(LH)	ZN(HL)	A1&!A2&!A3	0.0100	0.0010	0.1033	0.0520
B(LH)	ZN(HL)	A1&!A2&A3	0.0100	0.0010	0.0873	0.0470
B(LH)	ZN(HL)	A1&A2&!A3	0.0100	0.0010	0.0873	0.0471
B(LH)	ZN(HL)	A1&A2&A3	0.0100	0.0010	0.0852	0.0520
B(HL)	ZN(LH)	!A1&!A2&A3	0.0100	0.0010	0.1314	0.1207
B(HL)	ZN(LH)	!A1&A2&!A3	0.0100	0.0010	0.1314	0.1167
B(HL)	ZN(LH)	!A1&A2&A3	0.0100	0.0010	0.1459	0.1270
B(HL)	ZN(LH)	A1&!A2&!A3	0.0100	0.0010	0.1257	0.0925
B(HL)	ZN(LH)	A1&!A2&A3	0.0100	0.0010	0.1404	0.1031
B(HL)	ZN(LH)	A1&A2&!A3	0.0100	0.0010	0.1403	0.1031
B(HL)	ZN(LH)	A1&A2&A3	0.0100	0.0010	0.1532	0.1128
A1(HL)	ZN(LH)	!A2&!A3&B	0.0100	0.0010	0.2051	0.1848
A1(LH)	ZN(HL)	!A2&!A3&B	0.0100	0.0010	0.0760	0.0517
A2(HL)	ZN(LH)	!A1&!A3&B	0.0100	0.0010	0.2761	0.1862
A2(LH)	ZN(HL)	!A1&!A3&B	0.0100	0.0010	0.0994	0.0699
A3(LH)	ZN(HL)	!A1&!A2&B	0.0100	0.0010	0.1051	0.0825
A3(HL)	ZN(LH)	!A1&!A2&B	0.0100	0.0010	0.2994	0.1863

DYNAMIC ENERGY

Input Pin	When Condition	Tin (ns)	Output	Out Load (pf)	Energy (uW/MHz)
A1	!A2&!A3&B	0.0100	ZN(LH)	0.0010	0.1608
B	!A1&!A2&A3	0.0100	ZN(HL)	0.0010	0.0609
B	!A1&A2&!A3	0.0100	ZN(HL)	0.0010	0.0389
B	!A1&A2&A3	0.0100	ZN(HL)	0.0010	0.0391
B	A1&!A2&!A3	0.0100	ZN(HL)	0.0010	0.0073
B	A1&!A2&A3	0.0100	ZN(HL)	0.0010	0.0074
B	A1&A2&!A3	0.0100	ZN(HL)	0.0010	0.0074
B	A1&A2&A3	0.0100	ZN(HL)	0.0010	0.0074
A2	!A1&!A3&B	0.0100	ZN(LH)	0.0010	0.1881
A3	!A1&!A2&B	0.0100	ZN(HL)	0.0010	0.0606
A1	!A2&!A3&B	0.0100	ZN(HL)	0.0010	0.0104
B	!A1&!A2&A3	0.0100	ZN(LH)	0.0010	0.2977
B	!A1&A2&!A3	0.0100	ZN(LH)	0.0010	0.2720
B	!A1&A2&A3	0.0100	ZN(LH)	0.0010	0.2943
B	A1&!A2&!A3	0.0100	ZN(LH)	0.0010	0.2446
B	A1&!A2&A3	0.0100	ZN(LH)	0.0010	0.2670
B	A1&A2&!A3	0.0100	ZN(LH)	0.0010	0.2670
B	A1&A2&A3	0.0100	ZN(LH)	0.0010	0.2888
A2	!A1&!A3&B	0.0100	ZN(HL)	0.0010	0.0412
A3	!A1&!A2&B	0.0100	ZN(LH)	0.0010	0.2139
B(HL)	!A1&!A2&!A3	0.0100	n/a	n/a	0.0416
A3(LH)	!A1&!A2&!B	0.0100	n/a	n/a	0.0198

continues on next page

Table 94 – continued from previous page

A3(LH)	!A1&A2&!B	0.0100	n/a	n/a	-0.0386
A3(LH)	A1&!A2&!B	0.0100	n/a	n/a	-0.0352
A3(LH)	A1&A2&!B	0.0100	n/a	n/a	-0.0380
A3(LH)	!A1&A2&B	0.0100	n/a	n/a	-0.0310
A3(LH)	A1&!A2&B	0.0100	n/a	n/a	-0.0301
A3(LH)	A1&A2&B	0.0100	n/a	n/a	-0.0335
A2(LH)	!A1&!A3&!B	0.0100	n/a	n/a	0.0197
A2(LH)	!A1&A3&!B	0.0100	n/a	n/a	-0.0388
A2(LH)	A1&!A3&!B	0.0100	n/a	n/a	-0.0386
A2(LH)	A1&A3&!B	0.0100	n/a	n/a	-0.0373
A2(LH)	!A1&A3&B	0.0100	n/a	n/a	-0.0111
A2(LH)	A1&!A3&B	0.0100	n/a	n/a	-0.0288
A2(LH)	A1&A3&B	0.0100	n/a	n/a	-0.0256
A1(LH)	!A2&!A3&!B	0.0100	n/a	n/a	0.0196
A1(LH)	!A2&A3&!B	0.0100	n/a	n/a	-0.0355
A1(LH)	A2&!A3&!B	0.0100	n/a	n/a	-0.0389
A1(LH)	A2&A3&!B	0.0100	n/a	n/a	-0.0380
A1(LH)	!A2&A3&B	0.0100	n/a	n/a	-0.0100
A1(LH)	A2&!A3&B	0.0100	n/a	n/a	-0.0103
A1(LH)	A2&A3&B	0.0100	n/a	n/a	-0.0103
A3(HL)	!A1&!A2&!B	0.0100	n/a	n/a	0.0398
A3(HL)	!A1&A2&!B	0.0100	n/a	n/a	0.0413
A3(HL)	A1&!A2&!B	0.0100	n/a	n/a	0.0413
A3(HL)	A1&A2&!B	0.0100	n/a	n/a	0.0414
A3(HL)	!A1&A2&B	0.0100	n/a	n/a	0.0352
A3(HL)	A1&!A2&B	0.0100	n/a	n/a	0.0352
A3(HL)	A1&A2&B	0.0100	n/a	n/a	0.0352
A2(HL)	!A1&!A3&!B	0.0100	n/a	n/a	0.0399
A2(HL)	!A1&A3&!B	0.0100	n/a	n/a	0.0412
A2(HL)	A1&!A3&!B	0.0100	n/a	n/a	0.0413
A2(HL)	A1&A3&!B	0.0100	n/a	n/a	0.0287
A2(HL)	!A1&A3&B	0.0100	n/a	n/a	0.0222
A2(HL)	A1&!A3&B	0.0100	n/a	n/a	0.0352
A2(HL)	A1&A3&B	0.0100	n/a	n/a	0.0225
B(LH)	!A1&!A2&!A3	0.0100	n/a	n/a	-0.0367
A1(HL)	!A2&!A3&!B	0.0100	n/a	n/a	0.0400
A1(HL)	!A2&A3&!B	0.0100	n/a	n/a	0.0414
A1(HL)	A2&!A3&!B	0.0100	n/a	n/a	0.0414
A1(HL)	A2&A3&!B	0.0100	n/a	n/a	0.0415
A1(HL)	!A2&A3&B	0.0100	n/a	n/a	0.0551
A1(HL)	A2&!A3&B	0.0100	n/a	n/a	0.0330
A1(HL)	A2&A3&B	0.0100	n/a	n/a	0.0330

LEAKAGE POWER

When Condition	Power (nW)
!A1&!A2&!A3&!B	0.1255
!A1&!A2&!A3&B	0.1263
!A1&!A2&A3&!B	0.2050
!A1&A2&!A3&!B	0.2050
!A1&A2&A3&!B	0.2054
A1&!A2&!A3&!B	0.2050
A1&!A2&A3&!B	0.2054
A1&A2&!A3&!B	0.2054
A1&A2&A3&!B	0.2056
!A1&!A2&A3&B	0.1739
!A1&A2&!A3&B	0.1385
!A1&A2&A3&B	0.1385
A1&!A2&!A3&B	0.1029
A1&!A2&A3&B	0.1029
A1&A2&!A3&B	0.1029
A1&A2&A3&B	0.1029

gf180mcu_fd_sc_mcu7t5v0__oai31_2

gf180mcu_fd_sc_mcu7t5v0__oai31_2 symbol

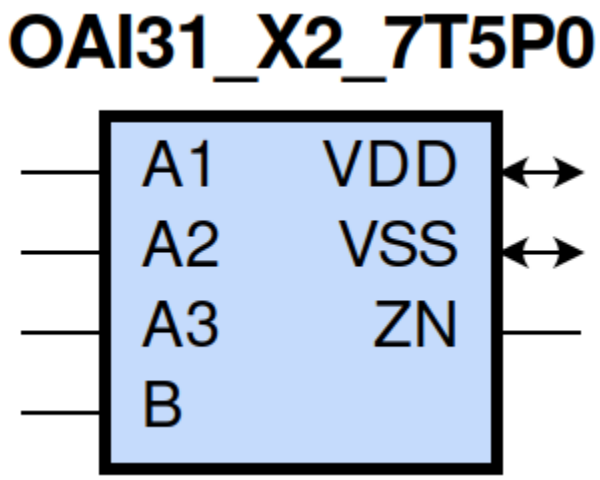

gf180mcu_fd_sc_mcu7t5v0__oai31_2 schematic

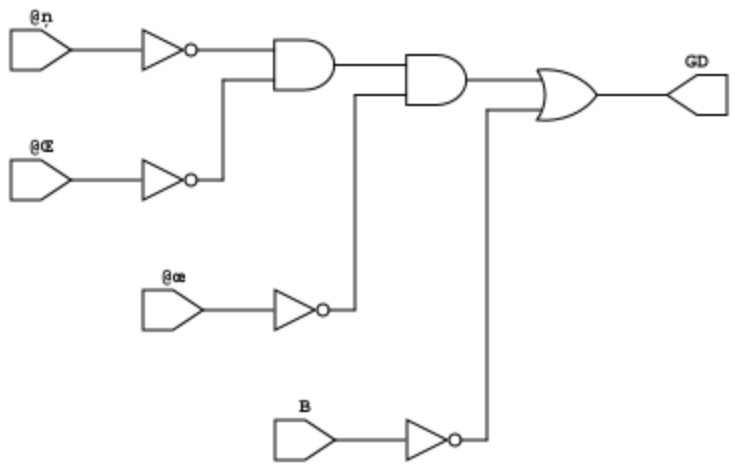

gf180mcu_fd_sc_mcu7t5v0__oai31_2 layout

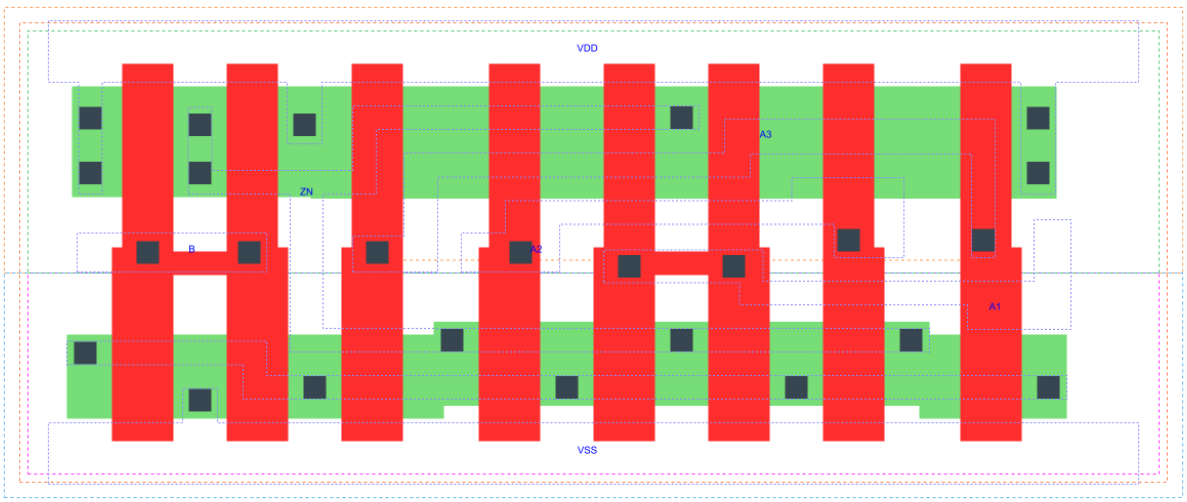

OAI31_X2 is a 3-input OR into 2-input NAND, NAND[OR(A1,A2,A3),B], 2X drive strength

Attributes

Attribute	Value
area	41.708800 μm^2

OUTPUT FUNCTIONS

Output Pin	Function
ZN	(((!A1)&(!A2)&(!A3))|(!B))

TRUTH TABLE FOR ZN

A1	A2	A3	B	ZN
0	0	0	?	1
?	?	?	0	1
1	?	?	1	0
?	1	?	1	0
?	?	1	1	0

FUNCTIONAL SCHEMATIC

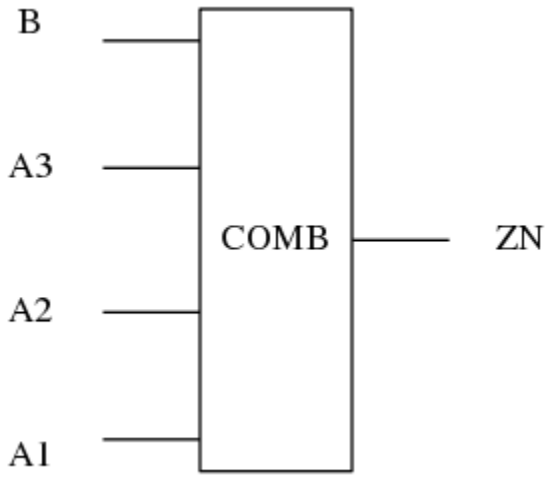

PIN CAPACITANCE (pf)

Pin	Type	Capacitance (pf)
B	input	0.0087
A3	input	0.0102
A2	input	0.0095
A1	input	0.0098

DELAY AND OUTPUT TRANSITION TIME corresponding to min slew and load

Input Pin	Output	When Condition	Tin (ns)	Out Load (pf)	Delay (ns)	Tout (ns)
B(LH)	ZN(HL)	!A1&!A2&A3	0.0100	0.0010	0.1295	0.0724
B(LH)	ZN(HL)	!A1&A2&!A3	0.0100	0.0010	0.1207	0.0608
B(LH)	ZN(HL)	!A1&A2&A3	0.0100	0.0010	0.1003	0.0544
B(LH)	ZN(HL)	A1&!A2&!A3	0.0100	0.0010	0.0994	0.0461
B(LH)	ZN(HL)	A1&!A2&A3	0.0100	0.0010	0.0847	0.0432
B(LH)	ZN(HL)	A1&A2&!A3	0.0100	0.0010	0.0848	0.0432
B(LH)	ZN(HL)	A1&A2&A3	0.0100	0.0010	0.0824	0.0490
B(HL)	ZN(LH)	!A1&!A2&A3	0.0100	0.0010	0.1344	0.1237
B(HL)	ZN(LH)	!A1&A2&!A3	0.0100	0.0010	0.1341	0.1178
B(HL)	ZN(LH)	!A1&A2&A3	0.0100	0.0010	0.1505	0.1285
B(HL)	ZN(LH)	A1&!A2&!A3	0.0100	0.0010	0.1279	0.0939
B(HL)	ZN(LH)	A1&!A2&A3	0.0100	0.0010	0.1444	0.1053
B(HL)	ZN(LH)	A1&A2&!A3	0.0100	0.0010	0.1445	0.1053
B(HL)	ZN(LH)	A1&A2&A3	0.0100	0.0010	0.1583	0.1158
A3(LH)	ZN(HL)	!A1&!A2&B	0.0100	0.0010	0.0935	0.0748
A3(HL)	ZN(LH)	!A1&!A2&B	0.0100	0.0010	0.2711	0.1636
A2(HL)	ZN(LH)	!A1&!A3&B	0.0100	0.0010	0.2435	0.1636
A2(LH)	ZN(HL)	!A1&!A3&B	0.0100	0.0010	0.0875	0.0609
A1(HL)	ZN(LH)	!A2&!A3&B	0.0100	0.0010	0.1837	0.1622
A1(LH)	ZN(HL)	!A2&!A3&B	0.0100	0.0010	0.0674	0.0451

DYNAMIC ENERGY

Input Pin	When Condition	Tin (ns)	Output	Out Load (pf)	Energy (uW/MHz)
A1	!A2&!A3&B	0.0100	ZN(LH)	0.0010	0.3117
B	!A1&!A2&A3	0.0100	ZN(HL)	0.0010	0.1089
B	!A1&A2&!A3	0.0100	ZN(HL)	0.0010	0.0543
B	!A1&A2&A3	0.0100	ZN(HL)	0.0010	0.0543
B	A1&!A2&!A3	0.0100	ZN(HL)	0.0010	0.0058
B	A1&!A2&A3	0.0100	ZN(HL)	0.0010	0.0058
B	A1&A2&!A3	0.0100	ZN(HL)	0.0010	0.0058
B	A1&A2&A3	0.0100	ZN(HL)	0.0010	0.0059
A2	!A1&!A3&B	0.0100	ZN(LH)	0.0010	0.3657
A3	!A1&!A2&B	0.0100	ZN(HL)	0.0010	0.1070
A1	!A2&!A3&B	0.0100	ZN(HL)	0.0010	0.0102
B	!A1&!A2&A3	0.0100	ZN(LH)	0.0010	0.6137
B	!A1&A2&!A3	0.0100	ZN(LH)	0.0010	0.5604
B	!A1&A2&A3	0.0100	ZN(LH)	0.0010	0.6054
B	A1&!A2&!A3	0.0100	ZN(LH)	0.0010	0.5067
B	A1&!A2&A3	0.0100	ZN(LH)	0.0010	0.5519
B	A1&A2&!A3	0.0100	ZN(LH)	0.0010	0.5515
B	A1&A2&A3	0.0100	ZN(LH)	0.0010	0.5958

continues on next page

Table 95 – continued from previous page

A2	!A1&!A3&B	0.0100	ZN(HL)	0.0010	0.0563
A3	!A1&!A2&B	0.0100	ZN(LH)	0.0010	0.4185
B(HL)	!A1&!A2&!A3	0.0100	n/a	n/a	0.0789
A3(LH)	!A1&!A2&!B	0.0100	n/a	n/a	0.0675
A3(LH)	!A1&A2&!B	0.0100	n/a	n/a	-0.0771
A3(LH)	A1&!A2&!B	0.0100	n/a	n/a	-0.0700
A3(LH)	A1&A2&!B	0.0100	n/a	n/a	-0.0755
A3(LH)	!A1&A2&B	0.0100	n/a	n/a	-0.0608
A3(LH)	A1&!A2&B	0.0100	n/a	n/a	-0.0594
A3(LH)	A1&A2&B	0.0100	n/a	n/a	-0.0664
A2(LH)	!A1&!A3&!B	0.0100	n/a	n/a	0.0673
A2(LH)	!A1&A3&!B	0.0100	n/a	n/a	-0.0774
A2(LH)	A1&!A3&!B	0.0100	n/a	n/a	-0.0774
A2(LH)	A1&A3&!B	0.0100	n/a	n/a	-0.0747
A2(LH)	!A1&A3&B	0.0100	n/a	n/a	-0.0217
A2(LH)	A1&!A3&B	0.0100	n/a	n/a	-0.0586
A2(LH)	A1&A3&B	0.0100	n/a	n/a	-0.0515
A1(LH)	!A2&!A3&!B	0.0100	n/a	n/a	0.0670
A1(LH)	!A2&A3&!B	0.0100	n/a	n/a	-0.0707
A1(LH)	A2&!A3&!B	0.0100	n/a	n/a	-0.0780
A1(LH)	A2&A3&!B	0.0100	n/a	n/a	-0.0766
A1(LH)	!A2&A3&B	0.0100	n/a	n/a	-0.0198
A1(LH)	A2&!A3&B	0.0100	n/a	n/a	-0.0201
A1(LH)	A2&A3&B	0.0100	n/a	n/a	-0.0201
A3(HL)	!A1&!A2&!B	0.0100	n/a	n/a	0.0795
A3(HL)	!A1&A2&!B	0.0100	n/a	n/a	0.0811
A3(HL)	A1&!A2&!B	0.0100	n/a	n/a	0.0810
A3(HL)	A1&A2&!B	0.0100	n/a	n/a	0.0813
A3(HL)	!A1&A2&B	0.0100	n/a	n/a	0.0705
A3(HL)	A1&!A2&B	0.0100	n/a	n/a	0.0704
A3(HL)	A1&A2&B	0.0100	n/a	n/a	0.0703
A2(HL)	!A1&!A3&!B	0.0100	n/a	n/a	0.0796
A2(HL)	!A1&A3&!B	0.0100	n/a	n/a	0.0808
A2(HL)	A1&!A3&!B	0.0100	n/a	n/a	0.0812
A2(HL)	A1&A3&!B	0.0100	n/a	n/a	0.0552
A2(HL)	!A1&A3&B	0.0100	n/a	n/a	0.0559
A2(HL)	A1&!A3&B	0.0100	n/a	n/a	0.0705
A2(HL)	A1&A3&B	0.0100	n/a	n/a	0.0442
B(LH)	!A1&!A2&!A3	0.0100	n/a	n/a	-0.0698
A1(HL)	!A2&!A3&!B	0.0100	n/a	n/a	0.0799
A1(HL)	!A2&A3&!B	0.0100	n/a	n/a	0.0813
A1(HL)	A2&!A3&!B	0.0100	n/a	n/a	0.0813
A1(HL)	A2&A3&!B	0.0100	n/a	n/a	0.0815
A1(HL)	!A2&A3&B	0.0100	n/a	n/a	0.1059
A1(HL)	A2&!A3&B	0.0100	n/a	n/a	0.0512
A1(HL)	A2&A3&B	0.0100	n/a	n/a	0.0512

LEAKAGE POWER

When Condition	Power (nW)
!A1&!A2&!A3&!B	0.2011
!A1&!A2&!A3&B	0.2027
!A1&!A2&A3&!B	0.3606
!A1&A2&!A3&!B	0.3606
!A1&A2&A3&!B	0.3613
A1&!A2&!A3&!B	0.3606
A1&!A2&A3&!B	0.3613
A1&A2&!A3&!B	0.3613
A1&A2&A3&!B	0.3618
!A1&!A2&A3&B	0.2978
!A1&A2&!A3&B	0.2270
!A1&A2&A3&B	0.2270
A1&!A2&!A3&B	0.1557
A1&!A2&A3&B	0.1557
A1&A2&!A3&B	0.1557
A1&A2&A3&B	0.1557

gf180mcu_fd_sc_mcu7t5v0__oai31_4

gf180mcu_fd_sc_mcu7t5v0__oai31_4 symbol

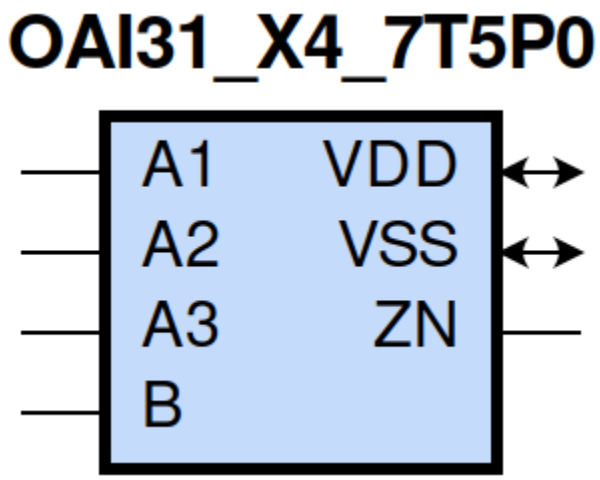

gf180mcu_fd_sc_mcu7t5v0__oai31_4 schematic

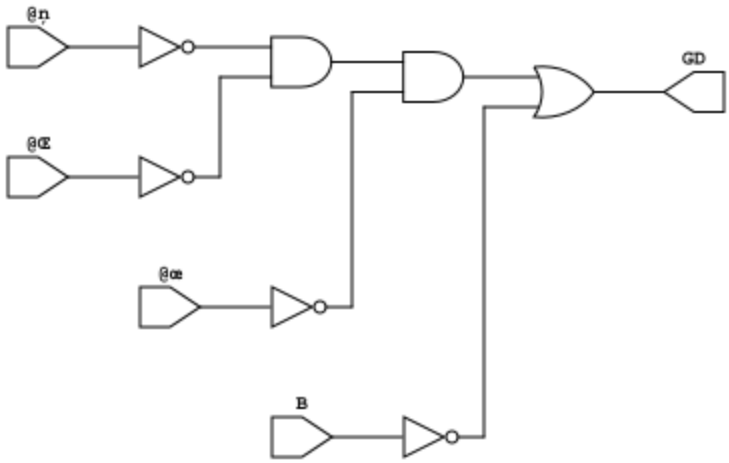

gf180mcu_fd_sc_mcu7t5v0__oai31_4 layout

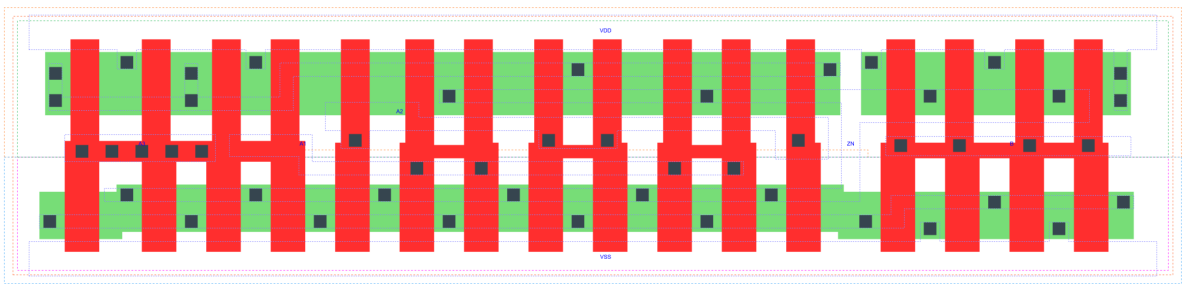

OAI31_X4 is a 3-input OR into 2-input NAND, NAND[OR(A1,A2,A3),B], 4X drive strength

Attributes

Attribute	Value
area	76.832000 μm^2

OUTPUT FUNCTIONS

Output Pin	Function
ZN	(((!A1)&(!A2)&(!A3))|(!B))

TRUTH TABLE FOR ZN

A1	A2	A3	B	ZN
0	0	0	?	1
?	?	?	0	1
1	?	?	1	0
?	1	?	1	0
?	?	1	1	0

FUNCTIONAL SCHEMATIC

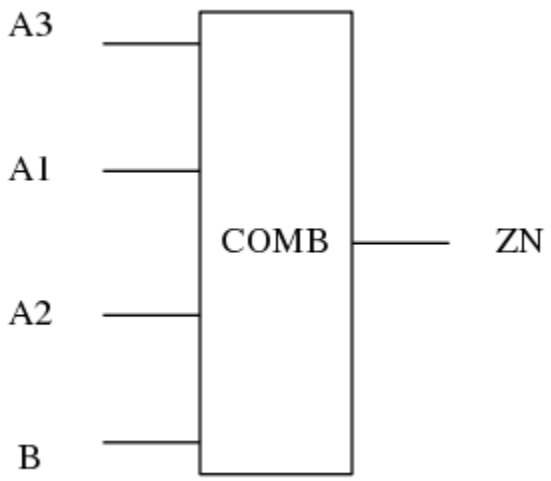

PIN CAPACITANCE (pf)

Pin	Type	Capacitance (pf)
A3	input	0.0169
A1	input	0.0191
A2	input	0.0187
B	input	0.0173

DELAY AND OUTPUT TRANSITION TIME corresponding to min slew and load

Input Pin	Output	When Condition	Tin (ns)	Out Load (pf)	Delay (ns)	Tout (ns)
A3(LH)	ZN(HL)	!A1&!A2&B	0.0100	0.0010	0.0902	0.0738
A3(HL)	ZN(LH)	!A1&!A2&B	0.0100	0.0010	0.2708	0.1550
A1(HL)	ZN(LH)	!A2&!A3&B	0.0100	0.0010	0.1692	0.1520
A1(LH)	ZN(HL)	!A2&!A3&B	0.0100	0.0010	0.0640	0.0420
A2(HL)	ZN(LH)	!A1&!A3&B	0.0100	0.0010	0.2303	0.1545
A2(LH)	ZN(HL)	!A1&!A3&B	0.0100	0.0010	0.0840	0.0581
B(LH)	ZN(HL)	!A1&!A2&A3	0.0100	0.0010	0.1259	0.0713
B(LH)	ZN(HL)	!A1&A2&!A3	0.0100	0.0010	0.1168	0.0577
B(LH)	ZN(HL)	!A1&A2&A3	0.0100	0.0010	0.0972	0.0522
B(LH)	ZN(HL)	A1&!A2&!A3	0.0100	0.0010	0.0955	0.0430
B(LH)	ZN(HL)	A1&!A2&A3	0.0100	0.0010	0.0816	0.0408
B(LH)	ZN(HL)	A1&A2&!A3	0.0100	0.0010	0.0816	0.0408
B(LH)	ZN(HL)	A1&A2&A3	0.0100	0.0010	0.0795	0.0467
B(HL)	ZN(LH)	!A1&!A2&A3	0.0100	0.0010	0.1270	0.1173
B(HL)	ZN(LH)	!A1&A2&!A3	0.0100	0.0010	0.1271	0.1117
B(HL)	ZN(LH)	!A1&A2&A3	0.0100	0.0010	0.1430	0.1225
B(HL)	ZN(LH)	A1&!A2&!A3	0.0100	0.0010	0.1207	0.0882
B(HL)	ZN(LH)	A1&!A2&A3	0.0100	0.0010	0.1370	0.0993
B(HL)	ZN(LH)	A1&A2&!A3	0.0100	0.0010	0.1371	0.0993
B(HL)	ZN(LH)	A1&A2&A3	0.0100	0.0010	0.1509	0.1099

DYNAMIC ENERGY

Input Pin	When Condition	Tin (ns)	Output	Out Load (pf)	Energy (uW/MHz)
A1	!A2&!A3&B	0.0100	ZN(LH)	0.0010	0.6051
B	!A1&!A2&A3	0.0100	ZN(HL)	0.0010	0.2160
B	!A1&A2&!A3	0.0100	ZN(HL)	0.0010	0.1114
B	!A1&A2&A3	0.0100	ZN(HL)	0.0010	0.1111
B	A1&!A2&!A3	0.0100	ZN(HL)	0.0010	0.0105
B	A1&!A2&A3	0.0100	ZN(HL)	0.0010	0.0105
B	A1&A2&!A3	0.0100	ZN(HL)	0.0010	0.0105
B	A1&A2&A3	0.0100	ZN(HL)	0.0010	0.0105
A2	!A1&!A3&B	0.0100	ZN(LH)	0.0010	0.7136
A3	!A1&!A2&B	0.0100	ZN(HL)	0.0010	0.2147
A1	!A2&!A3&B	0.0100	ZN(HL)	0.0010	0.0205
B	!A1&!A2&A3	0.0100	ZN(LH)	0.0010	1.2746
B	!A1&A2&!A3	0.0100	ZN(LH)	0.0010	1.0996
B	!A1&A2&A3	0.0100	ZN(LH)	0.0010	1.1892
B	A1&!A2&!A3	0.0100	ZN(LH)	0.0010	0.9913
B	A1&!A2&A3	0.0100	ZN(LH)	0.0010	1.0814
B	A1&A2&!A3	0.0100	ZN(LH)	0.0010	1.0815
B	A1&A2&A3	0.0100	ZN(LH)	0.0010	1.1710
A2	!A1&!A3&B	0.0100	ZN(HL)	0.0010	0.1155
A3	!A1&!A2&B	0.0100	ZN(LH)	0.0010	0.8885
B(HL)	!A1&!A2&!A3	0.0100	n/a	n/a	0.1597
A3(LH)	!A1&!A2&!B	0.0100	n/a	n/a	0.1283

continues on next page

Table 96 – continued from previous page

A3(LH)	!A1&A2&!B	0.0100	n/a	n/a	-0.1453
A3(LH)	A1&!A2&!B	0.0100	n/a	n/a	-0.1337
A3(LH)	A1&A2&!B	0.0100	n/a	n/a	-0.1426
A3(LH)	!A1&A2&B	0.0100	n/a	n/a	-0.1151
A3(LH)	A1&!A2&B	0.0100	n/a	n/a	-0.1142
A3(LH)	A1&A2&B	0.0100	n/a	n/a	-0.1243
A2(LH)	!A1&!A3&!B	0.0100	n/a	n/a	0.1280
A2(LH)	!A1&A3&!B	0.0100	n/a	n/a	-0.1459
A2(LH)	A1&!A3&!B	0.0100	n/a	n/a	-0.1549
A2(LH)	A1&A3&!B	0.0100	n/a	n/a	-0.1397
A2(LH)	!A1&A3&B	0.0100	n/a	n/a	-0.0388
A2(LH)	A1&!A3&B	0.0100	n/a	n/a	-0.1171
A2(LH)	A1&A3&B	0.0100	n/a	n/a	-0.0921
A1(LH)	!A2&!A3&!B	0.0100	n/a	n/a	0.1275
A1(LH)	!A2&A3&!B	0.0100	n/a	n/a	-0.1345
A1(LH)	A2&!A3&!B	0.0100	n/a	n/a	-0.1559
A1(LH)	A2&A3&!B	0.0100	n/a	n/a	-0.1499
A1(LH)	!A2&A3&B	0.0100	n/a	n/a	-0.0370
A1(LH)	A2&!A3&B	0.0100	n/a	n/a	-0.0401
A1(LH)	A2&A3&B	0.0100	n/a	n/a	-0.0401
A3(HL)	!A1&!A2&!B	0.0100	n/a	n/a	0.1591
A3(HL)	!A1&A2&!B	0.0100	n/a	n/a	0.1626
A3(HL)	A1&!A2&!B	0.0100	n/a	n/a	0.1625
A3(HL)	A1&A2&!B	0.0100	n/a	n/a	0.1629
A3(HL)	!A1&A2&B	0.0100	n/a	n/a	0.1407
A3(HL)	A1&!A2&B	0.0100	n/a	n/a	0.1408
A3(HL)	A1&A2&B	0.0100	n/a	n/a	0.1407
A2(HL)	!A1&!A3&!B	0.0100	n/a	n/a	0.1591
A2(HL)	!A1&A3&!B	0.0100	n/a	n/a	0.1622
A2(HL)	A1&!A3&!B	0.0100	n/a	n/a	0.1626
A2(HL)	A1&A3&!B	0.0100	n/a	n/a	0.0985
A2(HL)	!A1&A3&B	0.0100	n/a	n/a	0.1072
A2(HL)	A1&!A3&B	0.0100	n/a	n/a	0.1410
A2(HL)	A1&A3&B	0.0100	n/a	n/a	0.0763
B(LH)	!A1&!A2&!A3	0.0100	n/a	n/a	-0.1413
A1(HL)	!A2&!A3&!B	0.0100	n/a	n/a	0.1595
A1(HL)	!A2&A3&!B	0.0100	n/a	n/a	0.1629
A1(HL)	A2&!A3&!B	0.0100	n/a	n/a	0.1626
A1(HL)	A2&A3&!B	0.0100	n/a	n/a	0.1629
A1(HL)	!A2&A3&B	0.0100	n/a	n/a	0.2109
A1(HL)	A2&!A3&B	0.0100	n/a	n/a	0.1058
A1(HL)	A2&A3&B	0.0100	n/a	n/a	0.1058

LEAKAGE POWER

When Condition	Power (nW)
!A1&!A2&!A3&!B	0.3521
!A1&!A2&!A3&B	0.3554
!A1&!A2&A3&!B	0.6705
!A1&A2&!A3&!B	0.6705
!A1&A2&A3&!B	0.6721
A1&!A2&!A3&!B	0.6705
A1&!A2&A3&!B	0.6721
A1&A2&!A3&!B	0.6720
A1&A2&A3&!B	0.6730
!A1&!A2&A3&B	0.5455
!A1&A2&!A3&B	0.4041
!A1&A2&A3&B	0.4041
A1&!A2&!A3&B	0.2613
A1&!A2&A3&B	0.2614
A1&A2&!A3&B	0.2614
A1&A2&A3&B	0.2614

gf180mcu_fd_sc_mcu7t5v0__oai32_1

gf180mcu_fd_sc_mcu7t5v0__oai32_1 symbol

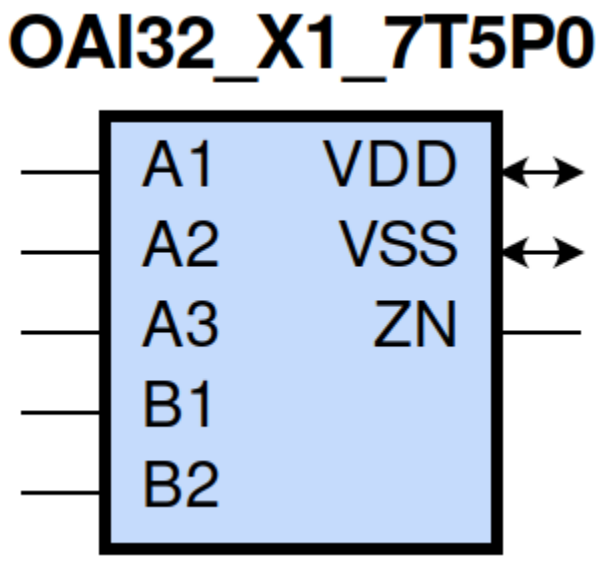

gf180mcu_fd_sc_mcu7t5v0__oai32_1 schematic

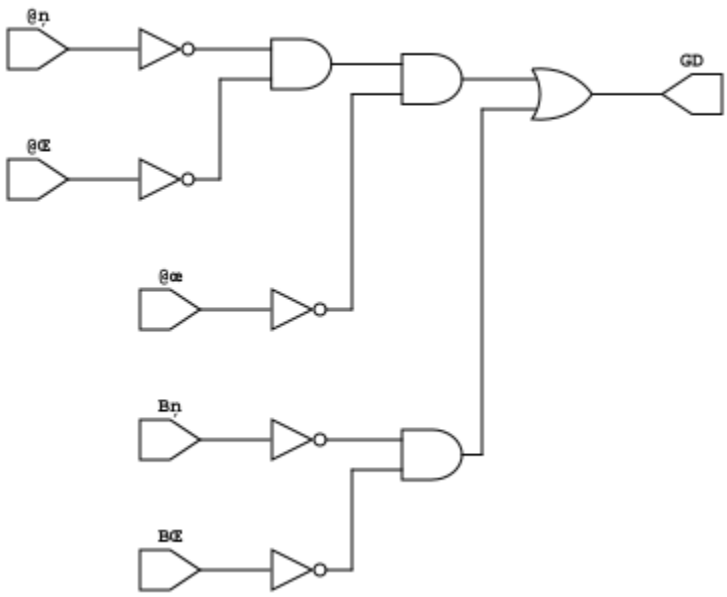

gf180mcu_fd_sc_mcu7t5v0__oai32_1 layout

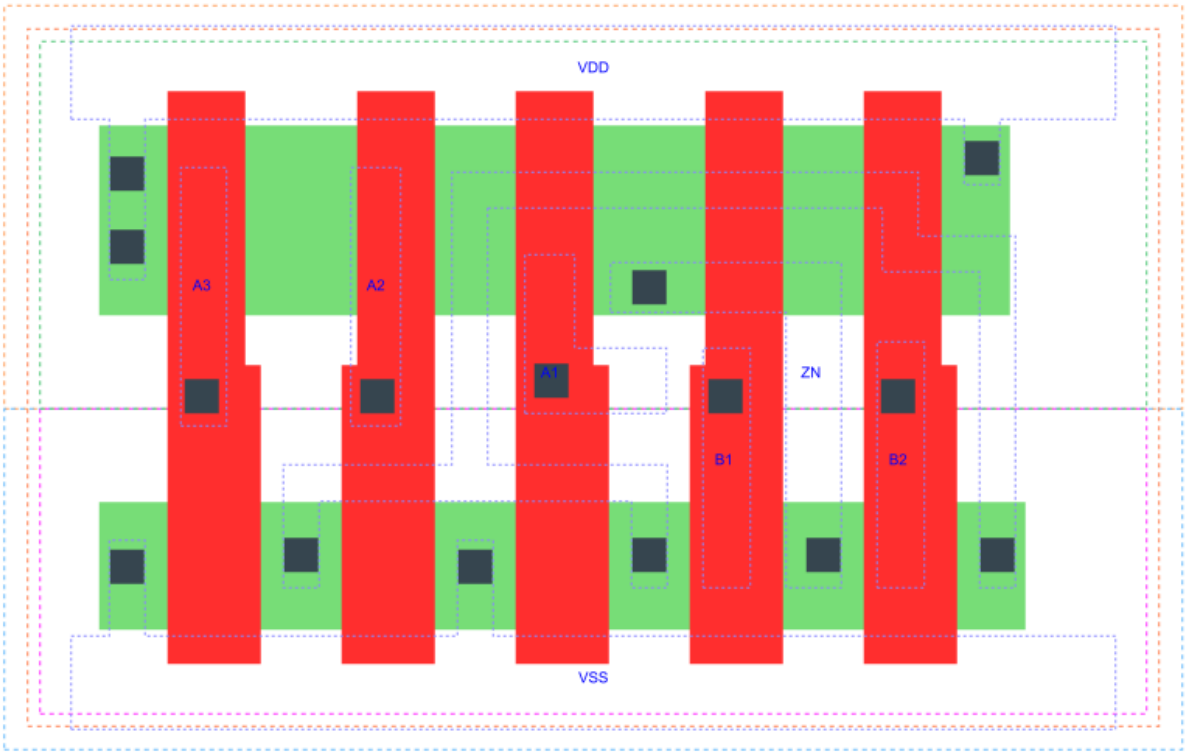

OAI32_X1 is a 3-input OR and a 2-input OR into 2-input NAND, NAND[OR(A1,A2,A3),OR(B1,B2)], 1X drive strength

Attributes

Attribute	Value
area	26.342400 μm^2

OUTPUT FUNCTIONS

Output Pin	Function
ZN	(((!A1)&(!A2)&(!A3))|((!B1)&(!B2)))

TRUTH TABLE FOR ZN

A1	A2	A3	B1	B2	ZN
0	0	0	?	?	1
?	?	?	0	0	1
1	?	?	1	?	0
1	?	?	?	1	0
?	1	?	1	?	0
?	1	?	?	1	0
?	?	1	1	?	0
?	?	1	?	1	0

FUNCTIONAL SCHEMATIC

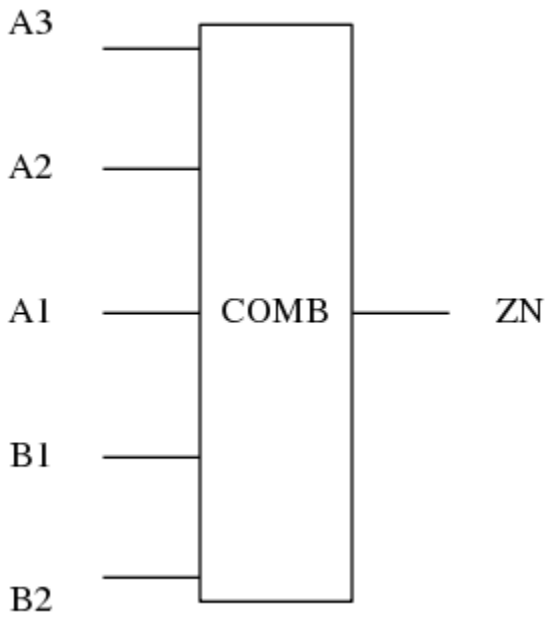

PIN CAPACITANCE (pf)

Pin	Type	Capacitance (pf)
A3	input	0.0045
A2	input	0.0046
A1	input	0.0049
B1	input	0.0050
B2	input	0.0047

DELAY AND OUTPUT TRANSITION TIME corresponding to min slew and load

Input Pin	Output	When Condition	Tin (ns)	Out Load (pf)	Delay (ns)	Tout (ns)
A3(LH)	ZN(HL)	!A1&!A2&!B1&B2	0.0100	0.0010	0.1645	0.0864
A3(LH)	ZN(HL)	!A1&!A2&B1&!B2	0.0100	0.0010	0.1358	0.0694
A3(LH)	ZN(HL)	!A1&!A2&B1&B2	0.0100	0.0010	0.1107	0.0633
A3(HL)	ZN(LH)	!A1&!A2&!B1&B2	0.0100	0.0010	0.4040	0.3250
A3(HL)	ZN(LH)	!A1&!A2&B1&!B2	0.0100	0.0010	0.3819	0.2586
A3(HL)	ZN(LH)	!A1&!A2&B1&B2	0.0100	0.0010	0.4178	0.2855
A2(HL)	ZN(LH)	!A1&!A3&!B1&B2	0.0100	0.0010	0.3779	0.3249
A2(HL)	ZN(LH)	!A1&!A3&B1&!B2	0.0100	0.0010	0.3558	0.2588
A2(HL)	ZN(LH)	!A1&!A3&B1&B2	0.0100	0.0010	0.3917	0.2856
A2(LH)	ZN(HL)	!A1&!A3&!B1&B2	0.0100	0.0010	0.1529	0.0721

continues on next page

Table 97 – continued from previous page

A2(LH)	ZN(HL)	!A1&!A3&B1&!B2	0.0100	0.0010	0.1278	0.0565
A2(LH)	ZN(HL)	!A1&!A3&B1&B2	0.0100	0.0010	0.1066	0.0529
A1(HL)	ZN(LH)	!A2&!A3&!B1&B2	0.0100	0.0010	0.3216	0.3247
A1(HL)	ZN(LH)	!A2&!A3&B1&!B2	0.0100	0.0010	0.2997	0.2582
A1(HL)	ZN(LH)	!A2&!A3&B1&B2	0.0100	0.0010	0.3351	0.2853
A1(LH)	ZN(HL)	!A2&!A3&!B1&B2	0.0100	0.0010	0.1287	0.0563
A1(LH)	ZN(HL)	!A2&!A3&B1&!B2	0.0100	0.0010	0.1054	0.0412
A1(LH)	ZN(HL)	!A2&!A3&B1&B2	0.0100	0.0010	0.0899	0.0410
B1(HL)	ZN(LH)	!A1&!A2&A3&!B2	0.0100	0.0010	0.1177	0.1394
B1(HL)	ZN(LH)	!A1&A2&!A3&!B2	0.0100	0.0010	0.1177	0.1226
B1(HL)	ZN(LH)	!A1&A2&A3&!B2	0.0100	0.0010	0.1167	0.1227
B1(HL)	ZN(LH)	A1&!A2&!A3&!B2	0.0100	0.0010	0.1088	0.0832
B1(HL)	ZN(LH)	A1&!A2&A3&!B2	0.0100	0.0010	0.1080	0.0832
B1(HL)	ZN(LH)	A1&A2&!A3&!B2	0.0100	0.0010	0.1080	0.0832
B1(HL)	ZN(LH)	A1&A2&A3&!B2	0.0100	0.0010	0.1076	0.0832
B1(LH)	ZN(HL)	!A1&!A2&A3&!B2	0.0100	0.0010	0.0924	0.0683
B1(LH)	ZN(HL)	!A1&A2&!A3&!B2	0.0100	0.0010	0.0831	0.0554
B1(LH)	ZN(HL)	!A1&A2&A3&!B2	0.0100	0.0010	0.0713	0.0426
B1(LH)	ZN(HL)	A1&!A2&!A3&!B2	0.0100	0.0010	0.0606	0.0386
B1(LH)	ZN(HL)	A1&!A2&A3&!B2	0.0100	0.0010	0.0538	0.0305
B1(LH)	ZN(HL)	A1&A2&!A3&!B2	0.0100	0.0010	0.0538	0.0305
B1(LH)	ZN(HL)	A1&A2&A3&!B2	0.0100	0.0010	0.0514	0.0282
B2(HL)	ZN(LH)	!A1&!A2&A3&!B1	0.0100	0.0010	0.1421	0.1399
B2(HL)	ZN(LH)	!A1&A2&!A3&!B1	0.0100	0.0010	0.1421	0.1229
B2(HL)	ZN(LH)	!A1&A2&A3&!B1	0.0100	0.0010	0.1414	0.1229
B2(HL)	ZN(LH)	A1&!A2&!A3&!B1	0.0100	0.0010	0.1333	0.0835
B2(HL)	ZN(LH)	A1&!A2&A3&!B1	0.0100	0.0010	0.1326	0.0835
B2(HL)	ZN(LH)	A1&A2&!A3&!B1	0.0100	0.0010	0.1326	0.0835
B2(HL)	ZN(LH)	A1&A2&A3&!B1	0.0100	0.0010	0.1321	0.0835
B2(LH)	ZN(HL)	!A1&!A2&A3&!B1	0.0100	0.0010	0.1192	0.0855
B2(LH)	ZN(HL)	!A1&A2&!A3&!B1	0.0100	0.0010	0.1059	0.0718
B2(LH)	ZN(HL)	!A1&A2&A3&!B1	0.0100	0.0010	0.0892	0.0555
B2(LH)	ZN(HL)	A1&!A2&!A3&!B1	0.0100	0.0010	0.0806	0.0557
B2(LH)	ZN(HL)	A1&!A2&A3&!B1	0.0100	0.0010	0.0692	0.0432
B2(LH)	ZN(HL)	A1&A2&!A3&!B1	0.0100	0.0010	0.0692	0.0431
B2(LH)	ZN(HL)	A1&A2&A3&!B1	0.0100	0.0010	0.0654	0.0399

DYNAMIC ENERGY

Input Pin	When Condition	Tin (ns)	Output	Out Load (pf)	Energy (uW/MHz)
A1	!A2&!A3&!B1&B2	0.0100	ZN(LH)	0.0010	0.2776
A1	!A2&!A3&B1&!B2	0.0100	ZN(LH)	0.0010	0.2481
A1	!A2&!A3&B1&B2	0.0100	ZN(LH)	0.0010	0.2706
B2	!A1&!A2&A3&!B1	0.0100	ZN(LH)	0.0010	0.2076
B2	!A1&A2&!A3&!B1	0.0100	ZN(LH)	0.0010	0.1782
B2	!A1&A2&A3&!B1	0.0100	ZN(LH)	0.0010	0.1776
B2	A1&!A2&!A3&!B1	0.0100	ZN(LH)	0.0010	0.1485

continues on next page

Table 98 – continued from previous page

B2	A1&!A2&A3&!B1	0.0100	ZN(LH)	0.0010	0.1479
B2	A1&A2&!A3&!B1	0.0100	ZN(LH)	0.0010	0.1479
B2	A1&A2&A3&!B1	0.0100	ZN(LH)	0.0010	0.1476
B1	!A1&!A2&A3&!B2	0.0100	ZN(LH)	0.0010	0.1777
B1	!A1&A2&!A3&!B2	0.0100	ZN(LH)	0.0010	0.1483
B1	!A1&A2&A3&!B2	0.0100	ZN(LH)	0.0010	0.1476
B1	A1&!A2&!A3&!B2	0.0100	ZN(LH)	0.0010	0.1186
B1	A1&!A2&A3&!B2	0.0100	ZN(LH)	0.0010	0.1180
B1	A1&A2&!A3&!B2	0.0100	ZN(LH)	0.0010	0.1180
B1	A1&A2&A3&!B2	0.0100	ZN(LH)	0.0010	0.1176
A2	!A1&!A3&!B1&B2	0.0100	ZN(LH)	0.0010	0.3074
A2	!A1&!A3&B1&!B2	0.0100	ZN(LH)	0.0010	0.2778
A2	!A1&!A3&B1&B2	0.0100	ZN(LH)	0.0010	0.3004
B1	!A1&!A2&A3&!B2	0.0100	ZN(HL)	0.0010	0.0628
B1	!A1&A2&!A3&!B2	0.0100	ZN(HL)	0.0010	0.0350
B1	!A1&A2&A3&!B2	0.0100	ZN(HL)	0.0010	0.0351
B1	A1&!A2&!A3&!B2	0.0100	ZN(HL)	0.0010	0.0100
B1	A1&!A2&A3&!B2	0.0100	ZN(HL)	0.0010	0.0099
B1	A1&A2&!A3&!B2	0.0100	ZN(HL)	0.0010	0.0099
B1	A1&A2&A3&!B2	0.0100	ZN(HL)	0.0010	0.0100
A3	!A1&!A2&!B1&B2	0.0100	ZN(HL)	0.0010	0.0837
A3	!A1&!A2&B1&!B2	0.0100	ZN(HL)	0.0010	0.0593
A3	!A1&!A2&B1&B2	0.0100	ZN(HL)	0.0010	0.0593
A1	!A2&!A3&!B1&B2	0.0100	ZN(HL)	0.0010	0.0351
A1	!A2&!A3&B1&!B2	0.0100	ZN(HL)	0.0010	0.0100
A1	!A2&!A3&B1&B2	0.0100	ZN(HL)	0.0010	0.0100
B2	!A1&!A2&A3&!B1	0.0100	ZN(HL)	0.0010	0.0841
B2	!A1&A2&!A3&!B1	0.0100	ZN(HL)	0.0010	0.0564
B2	!A1&A2&A3&!B1	0.0100	ZN(HL)	0.0010	0.0563
B2	A1&!A2&!A3&!B1	0.0100	ZN(HL)	0.0010	0.0317
B2	A1&!A2&A3&!B1	0.0100	ZN(HL)	0.0010	0.0316
B2	A1&A2&!A3&!B1	0.0100	ZN(HL)	0.0010	0.0317
B2	A1&A2&A3&!B1	0.0100	ZN(HL)	0.0010	0.0317
A2	!A1&!A3&!B1&B2	0.0100	ZN(HL)	0.0010	0.0584
A2	!A1&!A3&B1&!B2	0.0100	ZN(HL)	0.0010	0.0337
A2	!A1&!A3&B1&B2	0.0100	ZN(HL)	0.0010	0.0337
A3	!A1&!A2&!B1&B2	0.0100	ZN(LH)	0.0010	0.3368
A3	!A1&!A2&B1&!B2	0.0100	ZN(LH)	0.0010	0.3072
A3	!A1&!A2&B1&B2	0.0100	ZN(LH)	0.0010	0.3298
A3(LH)	!A1&!A2&!B1&!B2	0.0100	n/a	n/a	-0.0393
A3(LH)	!A1&A2&!B1&!B2	0.0100	n/a	n/a	-0.0380
A3(LH)	A1&!A2&!B1&!B2	0.0100	n/a	n/a	-0.0339
A3(LH)	A1&A2&!B1&!B2	0.0100	n/a	n/a	-0.0371
A3(LH)	!A1&A2&!B1&B2	0.0100	n/a	n/a	-0.0339
A3(LH)	!A1&A2&B1&!B2	0.0100	n/a	n/a	-0.0339
A3(LH)	!A1&A2&B1&B2	0.0100	n/a	n/a	-0.0339
A3(LH)	A1&!A2&!B1&B2	0.0100	n/a	n/a	-0.0328
A3(LH)	A1&!A2&B1&!B2	0.0100	n/a	n/a	-0.0327
A3(LH)	A1&!A2&B1&B2	0.0100	n/a	n/a	-0.0328
A3(LH)	A1&A2&!B1&B2	0.0100	n/a	n/a	-0.0370
A3(LH)	A1&A2&B1&!B2	0.0100	n/a	n/a	-0.0371
A3(LH)	A1&A2&B1&B2	0.0100	n/a	n/a	-0.0370

continues on next page

Table 98 – continued from previous page

A1(LH)	!A2&!A3&!B1&!B2	0.0100	n/a	n/a	-0.0397
A1(LH)	!A2&A3&!B1&!B2	0.0100	n/a	n/a	-0.0346
A1(LH)	A2&!A3&!B1&!B2	0.0100	n/a	n/a	-0.0385
A1(LH)	A2&A3&!B1&!B2	0.0100	n/a	n/a	-0.0377
A1(LH)	!A2&A3&!B1&B2	0.0100	n/a	n/a	-0.0110
A1(LH)	!A2&A3&B1&!B2	0.0100	n/a	n/a	-0.0110
A1(LH)	!A2&A3&B1&B2	0.0100	n/a	n/a	-0.0110
A1(LH)	A2&!A3&!B1&B2	0.0100	n/a	n/a	-0.0111
A1(LH)	A2&!A3&B1&!B2	0.0100	n/a	n/a	-0.0111
A1(LH)	A2&!A3&B1&B2	0.0100	n/a	n/a	-0.0111
A1(LH)	A2&A3&!B1&B2	0.0100	n/a	n/a	-0.0111
A1(LH)	A2&A3&B1&!B2	0.0100	n/a	n/a	-0.0111
A1(LH)	A2&A3&B1&B2	0.0100	n/a	n/a	-0.0111
A2(LH)	!A1&!A3&!B1&!B2	0.0100	n/a	n/a	-0.0395
A2(LH)	!A1&A3&!B1&!B2	0.0100	n/a	n/a	-0.0382
A2(LH)	A1&!A3&!B1&!B2	0.0100	n/a	n/a	-0.0382
A2(LH)	A1&A3&!B1&!B2	0.0100	n/a	n/a	-0.0367
A2(LH)	!A1&A3&!B1&B2	0.0100	n/a	n/a	-0.0120
A2(LH)	!A1&A3&B1&!B2	0.0100	n/a	n/a	-0.0120
A2(LH)	!A1&A3&B1&B2	0.0100	n/a	n/a	-0.0119
A2(LH)	A1&!A3&!B1&B2	0.0100	n/a	n/a	-0.0328
A2(LH)	A1&!A3&B1&!B2	0.0100	n/a	n/a	-0.0328
A2(LH)	A1&!A3&B1&B2	0.0100	n/a	n/a	-0.0328
A2(LH)	A1&A3&!B1&B2	0.0100	n/a	n/a	-0.0289
A2(LH)	A1&A3&B1&!B2	0.0100	n/a	n/a	-0.0289
A2(LH)	A1&A3&B1&B2	0.0100	n/a	n/a	-0.0289
A3(HL)	!A1&!A2&!B1&!B2	0.0100	n/a	n/a	0.0416
A3(HL)	!A1&A2&!B1&!B2	0.0100	n/a	n/a	0.0393
A3(HL)	A1&!A2&!B1&!B2	0.0100	n/a	n/a	0.0393
A3(HL)	A1&A2&!B1&!B2	0.0100	n/a	n/a	0.0393
A3(HL)	!A1&A2&!B1&B2	0.0100	n/a	n/a	0.0393
A3(HL)	!A1&A2&B1&!B2	0.0100	n/a	n/a	0.0393
A3(HL)	!A1&A2&B1&B2	0.0100	n/a	n/a	0.0393
A3(HL)	A1&!A2&!B1&B2	0.0100	n/a	n/a	0.0393
A3(HL)	A1&!A2&B1&!B2	0.0100	n/a	n/a	0.0393
A3(HL)	A1&!A2&B1&B2	0.0100	n/a	n/a	0.0393
A3(HL)	A1&A2&!B1&B2	0.0100	n/a	n/a	0.0393
A3(HL)	A1&A2&B1&!B2	0.0100	n/a	n/a	0.0393
A3(HL)	A1&A2&B1&B2	0.0100	n/a	n/a	0.0393
A2(HL)	!A1&!A3&!B1&!B2	0.0100	n/a	n/a	0.0417
A2(HL)	!A1&A3&!B1&!B2	0.0100	n/a	n/a	0.0395
A2(HL)	A1&!A3&!B1&!B2	0.0100	n/a	n/a	0.0394
A2(HL)	A1&A3&!B1&!B2	0.0100	n/a	n/a	0.0238
A2(HL)	!A1&A3&!B1&B2	0.0100	n/a	n/a	0.0287
A2(HL)	!A1&A3&B1&!B2	0.0100	n/a	n/a	0.0287
A2(HL)	!A1&A3&B1&B2	0.0100	n/a	n/a	0.0287
A2(HL)	A1&!A3&!B1&B2	0.0100	n/a	n/a	0.0394
A2(HL)	A1&!A3&B1&!B2	0.0100	n/a	n/a	0.0394
A2(HL)	A1&!A3&B1&B2	0.0100	n/a	n/a	0.0394
A2(HL)	A1&A3&!B1&B2	0.0100	n/a	n/a	0.0238
A2(HL)	A1&A3&B1&!B2	0.0100	n/a	n/a	0.0238
A2(HL)	A1&A3&B1&B2	0.0100	n/a	n/a	0.0238

continues on next page

Table 98 – continued from previous page

B1(HL)	!A1&!A2&!A3&!B2	0.0100	n/a	n/a	0.0443
B1(HL)	!A1&!A2&!A3&B2	0.0100	n/a	n/a	0.0443
B1(HL)	!A1&!A2&A3&B2	0.0100	n/a	n/a	0.0264
B1(HL)	!A1&A2&!A3&B2	0.0100	n/a	n/a	0.0264
B1(HL)	!A1&A2&A3&B2	0.0100	n/a	n/a	0.0264
B1(HL)	A1&!A2&!A3&B2	0.0100	n/a	n/a	0.0264
B1(HL)	A1&!A2&A3&B2	0.0100	n/a	n/a	0.0264
B1(HL)	A1&A2&!A3&B2	0.0100	n/a	n/a	0.0264
B1(HL)	A1&A2&A3&B2	0.0100	n/a	n/a	0.0264
B2(LH)	!A1&!A2&!A3&!B1	0.0100	n/a	n/a	0.0600
B2(LH)	!A1&!A2&!A3&B1	0.0100	n/a	n/a	-0.0426
B2(LH)	!A1&!A2&A3&B1	0.0100	n/a	n/a	-0.0329
B2(LH)	!A1&A2&!A3&B1	0.0100	n/a	n/a	-0.0329
B2(LH)	!A1&A2&A3&B1	0.0100	n/a	n/a	-0.0329
B2(LH)	A1&!A2&!A3&B1	0.0100	n/a	n/a	-0.0329
B2(LH)	A1&!A2&A3&B1	0.0100	n/a	n/a	-0.0329
B2(LH)	A1&A2&!A3&B1	0.0100	n/a	n/a	-0.0329
B2(LH)	A1&A2&A3&B1	0.0100	n/a	n/a	-0.0329
B2(HL)	!A1&!A2&!A3&!B1	0.0100	n/a	n/a	0.0441
B2(HL)	!A1&!A2&!A3&B1	0.0100	n/a	n/a	0.0440
B2(HL)	!A1&!A2&A3&B1	0.0100	n/a	n/a	0.0393
B2(HL)	!A1&A2&!A3&B1	0.0100	n/a	n/a	0.0393
B2(HL)	!A1&A2&A3&B1	0.0100	n/a	n/a	0.0393
B2(HL)	A1&!A2&!A3&B1	0.0100	n/a	n/a	0.0393
B2(HL)	A1&!A2&A3&B1	0.0100	n/a	n/a	0.0393
B2(HL)	A1&A2&!A3&B1	0.0100	n/a	n/a	0.0393
B2(HL)	A1&A2&A3&B1	0.0100	n/a	n/a	0.0393
A1(HL)	!A2&!A3&!B1&!B2	0.0100	n/a	n/a	0.0418
A1(HL)	!A2&A3&!B1&!B2	0.0100	n/a	n/a	0.0396
A1(HL)	A2&!A3&!B1&!B2	0.0100	n/a	n/a	0.0397
A1(HL)	A2&A3&!B1&!B2	0.0100	n/a	n/a	0.0397
A1(HL)	!A2&A3&!B1&B2	0.0100	n/a	n/a	0.0543
A1(HL)	!A2&A3&B1&!B2	0.0100	n/a	n/a	0.0543
A1(HL)	!A2&A3&B1&B2	0.0100	n/a	n/a	0.0543
A1(HL)	A2&!A3&!B1&B2	0.0100	n/a	n/a	0.0264
A1(HL)	A2&!A3&B1&!B2	0.0100	n/a	n/a	0.0264
A1(HL)	A2&!A3&B1&B2	0.0100	n/a	n/a	0.0264
A1(HL)	A2&A3&!B1&B2	0.0100	n/a	n/a	0.0264
A1(HL)	A2&A3&B1&!B2	0.0100	n/a	n/a	0.0264
A1(HL)	A2&A3&B1&B2	0.0100	n/a	n/a	0.0264
B1(LH)	!A1&!A2&!A3&!B2	0.0100	n/a	n/a	0.0596
B1(LH)	!A1&!A2&!A3&B2	0.0100	n/a	n/a	-0.0431
B1(LH)	!A1&!A2&A3&B2	0.0100	n/a	n/a	-0.0111
B1(LH)	!A1&A2&!A3&B2	0.0100	n/a	n/a	-0.0111
B1(LH)	!A1&A2&A3&B2	0.0100	n/a	n/a	-0.0111
B1(LH)	A1&!A2&!A3&B2	0.0100	n/a	n/a	-0.0111
B1(LH)	A1&!A2&A3&B2	0.0100	n/a	n/a	-0.0111
B1(LH)	A1&A2&!A3&B2	0.0100	n/a	n/a	-0.0111
B1(LH)	A1&A2&A3&B2	0.0100	n/a	n/a	-0.0111

LEAKAGE POWER

When Condition	Power (nW)
!A1&!A2&!A3&!B1&!B2	0.1005
!A1&!A2&!A3&!B1&B2	0.2004
!A1&!A2&!A3&B1&!B2	0.2004
!A1&!A2&!A3&B1&B2	0.2009
!A1&!A2&A3&!B1&!B2	0.1009
!A1&A2&!A3&!B1&!B2	0.1009
!A1&A2&A3&!B1&!B2	0.1009
A1&!A2&!A3&!B1&!B2	0.1009
A1&!A2&A3&!B1&!B2	0.1009
A1&A2&!A3&!B1&!B2	0.1009
A1&A2&A3&!B1&!B2	0.1009
!A1&!A2&A3&!B1&B2	0.2096
!A1&!A2&A3&B1&!B2	0.1740
!A1&!A2&A3&B1&B2	0.1740
!A1&A2&!A3&!B1&B2	0.1743
!A1&A2&!A3&B1&!B2	0.1386
!A1&A2&!A3&B1&B2	0.1386
!A1&A2&A3&!B1&B2	0.1743
!A1&A2&A3&B1&!B2	0.1386
!A1&A2&A3&B1&B2	0.1386
A1&!A2&!A3&!B1&B2	0.1386
A1&!A2&!A3&B1&!B2	0.1030
A1&!A2&!A3&B1&B2	0.1030
A1&!A2&A3&!B1&B2	0.1386
A1&!A2&A3&B1&!B2	0.1030
A1&!A2&A3&B1&B2	0.1030
A1&A2&!A3&!B1&B2	0.1386
A1&A2&!A3&B1&!B2	0.1030
A1&A2&!A3&B1&B2	0.1030
A1&A2&A3&!B1&B2	0.1386
A1&A2&A3&B1&!B2	0.1030
A1&A2&A3&B1&B2	0.1030

gf180mcu_fd_sc_mcu7t5v0__oai32_2

gf180mcu_fd_sc_mcu7t5v0__oai32_2 symbol

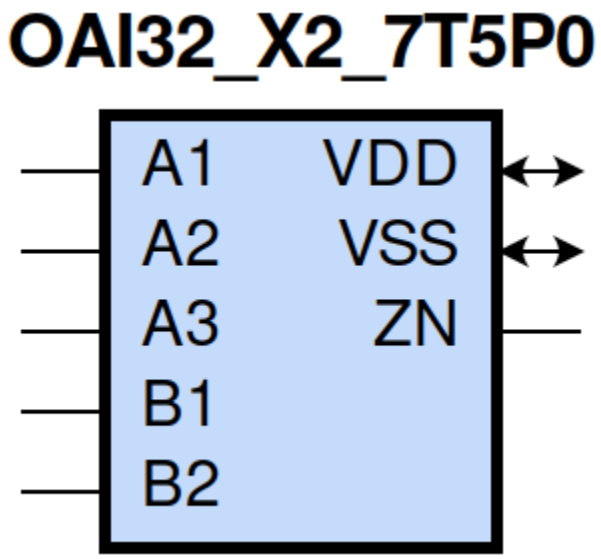

gf180mcu_fd_sc_mcu7t5v0__oai32_2 schematic

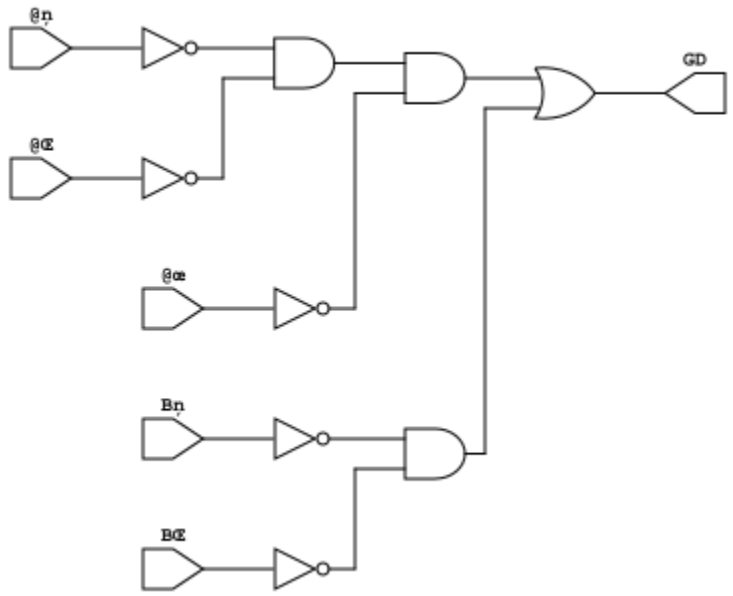

gf180mcu_fd_sc_mcu7t5v0__oai32_2 layout

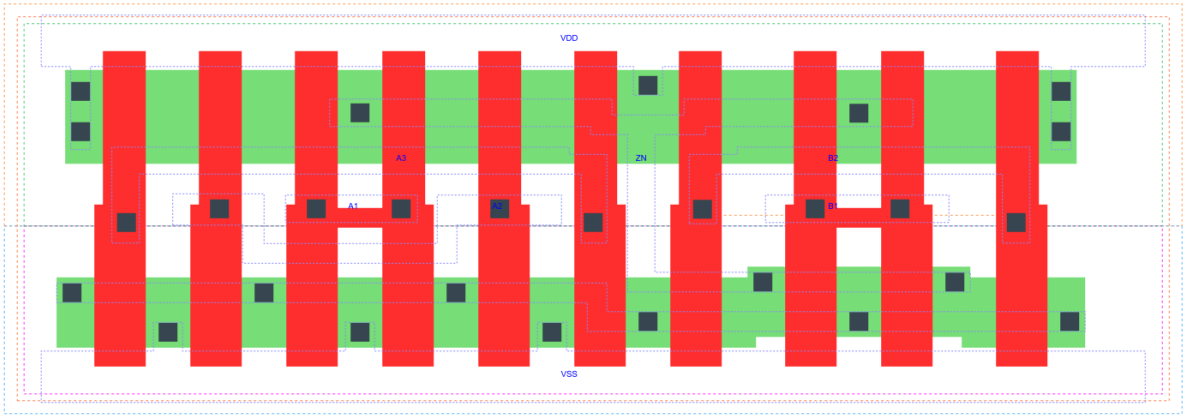

OAI32_X2 is a 3-input OR and a 2-input OR into 2-input NAND, NAND[OR(A1,A2,A3),OR(B1,B2)], 2X drive strength

Attributes

Attribute	Value
area	50.489600 μm^2

OUTPUT FUNCTIONS

Output Pin	Function
ZN	(((!A1)&(!A2)&(!A3))|((!B1)&(!B2)))

TRUTH TABLE FOR ZN

A1	A2	A3	B1	B2	ZN
0	0	0	?	?	1
?	?	?	0	0	1
1	?	?	1	?	0
1	?	?	?	1	0
?	1	?	1	?	0
?	1	?	?	1	0
?	?	1	1	?	0
?	?	1	?	1	0

FUNCTIONAL SCHEMATIC

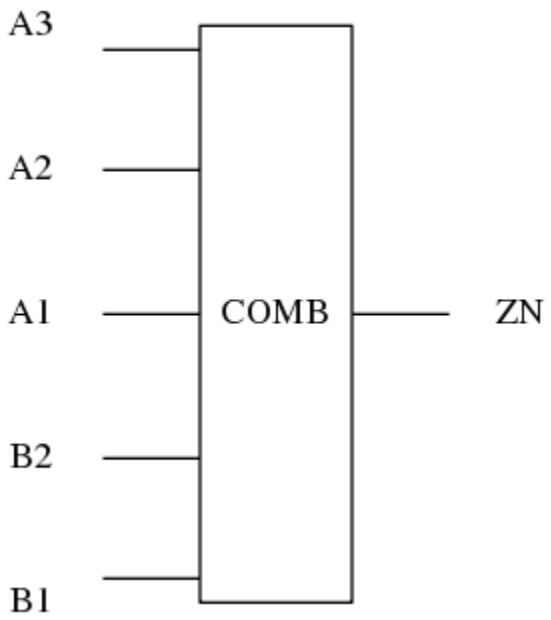

PIN CAPACITANCE (pf)

Pin	Type	Capacitance (pf)
A3	input	0.0098
A2	input	0.0095
A1	input	0.0089
B2	input	0.0093
B1	input	0.0088

DELAY AND OUTPUT TRANSITION TIME corresponding to min slew and load

Input Pin	Output	When Condition	Tin (ns)	Out Load (pf)	Delay (ns)	Tout (ns)
A3(LH)	ZN(HL)	!A1&!A2&!B1&B2	0.0100	0.0010	0.1520	0.0824
A3(LH)	ZN(HL)	!A1&!A2&B1&!B2	0.0100	0.0010	0.1243	0.0656
A3(LH)	ZN(HL)	!A1&!A2&B1&B2	0.0100	0.0010	0.1015	0.0594
A3(HL)	ZN(LH)	!A1&!A2&!B1&B2	0.0100	0.0010	0.4217	0.3426
A3(HL)	ZN(LH)	!A1&!A2&B1&!B2	0.0100	0.0010	0.3988	0.2685
A3(HL)	ZN(LH)	!A1&!A2&B1&B2	0.0100	0.0010	0.4368	0.2979

continues on next page

Table 100 – continued from previous page

A2(HL)	ZN(LH)	!A1&!A3&!B1&B2	0.0100	0.0010	0.3967	0.3426
A2(HL)	ZN(LH)	!A1&!A3&B1&!B2	0.0100	0.0010	0.3738	0.2687
A2(HL)	ZN(LH)	!A1&!A3&B1&B2	0.0100	0.0010	0.4119	0.2977
A2(LH)	ZN(HL)	!A1&!A3&!B1&B2	0.0100	0.0010	0.1427	0.0702
A2(LH)	ZN(HL)	!A1&!A3&B1&!B2	0.0100	0.0010	0.1184	0.0545
A2(LH)	ZN(HL)	!A1&!A3&B1&B2	0.0100	0.0010	0.0988	0.0506
A1(HL)	ZN(LH)	!A2&!A3&!B1&B2	0.0100	0.0010	0.3374	0.3425
A1(HL)	ZN(LH)	!A2&!A3&B1&!B2	0.0100	0.0010	0.3147	0.2683
A1(HL)	ZN(LH)	!A2&!A3&B1&B2	0.0100	0.0010	0.3526	0.2978
A1(LH)	ZN(HL)	!A2&!A3&!B1&B2	0.0100	0.0010	0.1202	0.0556
A1(LH)	ZN(HL)	!A2&!A3&B1&!B2	0.0100	0.0010	0.0981	0.0404
A1(LH)	ZN(HL)	!A2&!A3&B1&B2	0.0100	0.0010	0.0841	0.0395
B2(HL)	ZN(LH)	!A1&!A2&A3&!B1	0.0100	0.0010	0.1574	0.1503
B2(HL)	ZN(LH)	!A1&A2&!A3&!B1	0.0100	0.0010	0.1574	0.1328
B2(HL)	ZN(LH)	!A1&A2&A3&!B1	0.0100	0.0010	0.1564	0.1328
B2(HL)	ZN(LH)	A1&!A2&!A3&!B1	0.0100	0.0010	0.1483	0.0913
B2(HL)	ZN(LH)	A1&!A2&A3&!B1	0.0100	0.0010	0.1473	0.0914
B2(HL)	ZN(LH)	A1&A2&!A3&!B1	0.0100	0.0010	0.1473	0.0914
B2(HL)	ZN(LH)	A1&A2&A3&!B1	0.0100	0.0010	0.1468	0.0914
B2(LH)	ZN(HL)	!A1&!A2&A3&!B1	0.0100	0.0010	0.1129	0.0818
B2(LH)	ZN(HL)	!A1&A2&!A3&!B1	0.0100	0.0010	0.1019	0.0703
B2(LH)	ZN(HL)	!A1&A2&A3&!B1	0.0100	0.0010	0.0851	0.0542
B2(LH)	ZN(HL)	A1&!A2&!A3&!B1	0.0100	0.0010	0.0785	0.0554
B2(LH)	ZN(HL)	A1&!A2&A3&!B1	0.0100	0.0010	0.0666	0.0425
B2(LH)	ZN(HL)	A1&A2&!A3&!B1	0.0100	0.0010	0.0667	0.0426
B2(LH)	ZN(HL)	A1&A2&A3&!B1	0.0100	0.0010	0.0628	0.0393
B1(HL)	ZN(LH)	!A1&!A2&A3&!B2	0.0100	0.0010	0.1280	0.1498
B1(HL)	ZN(LH)	!A1&A2&!A3&!B2	0.0100	0.0010	0.1280	0.1325
B1(HL)	ZN(LH)	!A1&A2&A3&!B2	0.0100	0.0010	0.1271	0.1324
B1(HL)	ZN(LH)	A1&!A2&!A3&!B2	0.0100	0.0010	0.1191	0.0910
B1(HL)	ZN(LH)	A1&!A2&A3&!B2	0.0100	0.0010	0.1181	0.0910
B1(HL)	ZN(LH)	A1&A2&!A3&!B2	0.0100	0.0010	0.1181	0.0910
B1(HL)	ZN(LH)	A1&A2&A3&!B2	0.0100	0.0010	0.1176	0.0910
B1(LH)	ZN(HL)	!A1&!A2&A3&!B2	0.0100	0.0010	0.0870	0.0645
B1(LH)	ZN(HL)	!A1&A2&!A3&!B2	0.0100	0.0010	0.0796	0.0538
B1(LH)	ZN(HL)	!A1&A2&A3&!B2	0.0100	0.0010	0.0679	0.0413
B1(LH)	ZN(HL)	A1&!A2&!A3&!B2	0.0100	0.0010	0.0592	0.0384
B1(LH)	ZN(HL)	A1&!A2&A3&!B2	0.0100	0.0010	0.0521	0.0302
B1(LH)	ZN(HL)	A1&A2&!A3&!B2	0.0100	0.0010	0.0521	0.0302
B1(LH)	ZN(HL)	A1&A2&A3&!B2	0.0100	0.0010	0.0497	0.0280

DYNAMIC ENERGY

Input Pin	When Condition	Tin (ns)	Output	Out Load (pf)	Energy (uW/MHz)
A1	!A2&!A3&!B1&B2	0.0100	ZN(LH)	0.0010	0.5469
A1	!A2&!A3&B1&!B2	0.0100	ZN(LH)	0.0010	0.4927
A1	!A2&!A3&B1&B2	0.0100	ZN(LH)	0.0010	0.5375

continues on next page

Table 101 – continued from previous page

B2	!A1&!A2&A3&!B1	0.0100	ZN(LH)	0.0010	0.4259
B2	!A1&A2&!A3&!B1	0.0100	ZN(LH)	0.0010	0.3735
B2	!A1&A2&A3&!B1	0.0100	ZN(LH)	0.0010	0.3722
B2	A1&!A2&!A3&!B1	0.0100	ZN(LH)	0.0010	0.3201
B2	A1&!A2&A3&!B1	0.0100	ZN(LH)	0.0010	0.3188
B2	A1&A2&!A3&!B1	0.0100	ZN(LH)	0.0010	0.3188
B2	A1&A2&A3&!B1	0.0100	ZN(LH)	0.0010	0.3181
B1	!A1&!A2&A3&!B2	0.0100	ZN(LH)	0.0010	0.3715
B1	!A1&A2&!A3&!B2	0.0100	ZN(LH)	0.0010	0.3191
B1	!A1&A2&A3&!B2	0.0100	ZN(LH)	0.0010	0.3177
B1	A1&!A2&!A3&!B2	0.0100	ZN(LH)	0.0010	0.2657
B1	A1&!A2&A3&!B2	0.0100	ZN(LH)	0.0010	0.2644
B1	A1&A2&!A3&!B2	0.0100	ZN(LH)	0.0010	0.2644
B1	A1&A2&A3&!B2	0.0100	ZN(LH)	0.0010	0.2636
A2	!A1&!A3&!B1&B2	0.0100	ZN(LH)	0.0010	0.6003
A2	!A1&!A3&B1&!B2	0.0100	ZN(LH)	0.0010	0.5460
A2	!A1&!A3&B1&B2	0.0100	ZN(LH)	0.0010	0.5910
B1	!A1&!A2&A3&!B2	0.0100	ZN(HL)	0.0010	0.1055
B1	!A1&A2&!A3&!B2	0.0100	ZN(HL)	0.0010	0.0581
B1	!A1&A2&A3&!B2	0.0100	ZN(HL)	0.0010	0.0583
B1	A1&!A2&!A3&!B2	0.0100	ZN(HL)	0.0010	0.0094
B1	A1&!A2&A3&!B2	0.0100	ZN(HL)	0.0010	0.0094
B1	A1&A2&!A3&!B2	0.0100	ZN(HL)	0.0010	0.0094
B1	A1&A2&A3&!B2	0.0100	ZN(HL)	0.0010	0.0094
A3	!A1&!A2&!B1&B2	0.0100	ZN(HL)	0.0010	0.1544
A3	!A1&!A2&B1&!B2	0.0100	ZN(HL)	0.0010	0.0995
A3	!A1&!A2&B1&B2	0.0100	ZN(HL)	0.0010	0.0995
A1	!A2&!A3&!B1&B2	0.0100	ZN(HL)	0.0010	0.0658
A1	!A2&!A3&B1&!B2	0.0100	ZN(HL)	0.0010	0.0097
A1	!A2&!A3&B1&B2	0.0100	ZN(HL)	0.0010	0.0098
B2	!A1&!A2&A3&!B1	0.0100	ZN(HL)	0.0010	0.1555
B2	!A1&A2&!A3&!B1	0.0100	ZN(HL)	0.0010	0.1082
B2	!A1&A2&A3&!B1	0.0100	ZN(HL)	0.0010	0.1084
B2	A1&!A2&!A3&!B1	0.0100	ZN(HL)	0.0010	0.0602
B2	A1&!A2&A3&!B1	0.0100	ZN(HL)	0.0010	0.0603
B2	A1&A2&!A3&!B1	0.0100	ZN(HL)	0.0010	0.0603
B2	A1&A2&A3&!B1	0.0100	ZN(HL)	0.0010	0.0602
A2	!A1&!A3&!B1&B2	0.0100	ZN(HL)	0.0010	0.1116
A2	!A1&!A3&B1&!B2	0.0100	ZN(HL)	0.0010	0.0566
A2	!A1&!A3&B1&B2	0.0100	ZN(HL)	0.0010	0.0564
A3	!A1&!A2&!B1&B2	0.0100	ZN(LH)	0.0010	0.6527
A3	!A1&!A2&B1&!B2	0.0100	ZN(LH)	0.0010	0.5983
A3	!A1&!A2&B1&B2	0.0100	ZN(LH)	0.0010	0.6435
A3(LH)	!A1&!A2&!B1&!B2	0.0100	n/a	n/a	-0.0702
A3(LH)	!A1&A2&!B1&!B2	0.0100	n/a	n/a	-0.0680
A3(LH)	A1&!A2&!B1&!B2	0.0100	n/a	n/a	-0.0606
A3(LH)	A1&A2&!B1&!B2	0.0100	n/a	n/a	-0.0665
A3(LH)	!A1&A2&!B1&B2	0.0100	n/a	n/a	-0.0609
A3(LH)	!A1&A2&B1&!B2	0.0100	n/a	n/a	-0.0610
A3(LH)	!A1&A2&B1&B2	0.0100	n/a	n/a	-0.0609
A3(LH)	A1&!A2&!B1&B2	0.0100	n/a	n/a	-0.0587
A3(LH)	A1&!A2&B1&!B2	0.0100	n/a	n/a	-0.0587

continues on next page

Table 101 – continued from previous page

A3(LH)	A1&!A2&B1&B2	0.0100	n/a	n/a	-0.0587
A3(LH)	A1&A2&!B1&B2	0.0100	n/a	n/a	-0.0665
A3(LH)	A1&A2&B1&!B2	0.0100	n/a	n/a	-0.0665
A3(LH)	A1&A2&B1&B2	0.0100	n/a	n/a	-0.0664
A1(LH)	!A2&!A3&!B1&!B2	0.0100	n/a	n/a	-0.0708
A1(LH)	!A2&A3&!B1&!B2	0.0100	n/a	n/a	-0.0617
A1(LH)	A2&!A3&!B1&!B2	0.0100	n/a	n/a	-0.0688
A1(LH)	A2&A3&!B1&!B2	0.0100	n/a	n/a	-0.0673
A1(LH)	!A2&A3&!B1&B2	0.0100	n/a	n/a	-0.0196
A1(LH)	!A2&A3&B1&!B2	0.0100	n/a	n/a	-0.0196
A1(LH)	!A2&A3&B1&B2	0.0100	n/a	n/a	-0.0196
A1(LH)	A2&!A3&!B1&B2	0.0100	n/a	n/a	-0.0201
A1(LH)	A2&!A3&B1&!B2	0.0100	n/a	n/a	-0.0201
A1(LH)	A2&!A3&B1&B2	0.0100	n/a	n/a	-0.0201
A1(LH)	A2&A3&!B1&B2	0.0100	n/a	n/a	-0.0201
A1(LH)	A2&A3&B1&!B2	0.0100	n/a	n/a	-0.0201
A1(LH)	A2&A3&B1&B2	0.0100	n/a	n/a	-0.0201
A2(LH)	!A1&!A3&!B1&!B2	0.0100	n/a	n/a	-0.0706
A2(LH)	!A1&A3&!B1&!B2	0.0100	n/a	n/a	-0.0685
A2(LH)	A1&!A3&!B1&!B2	0.0100	n/a	n/a	-0.0684
A2(LH)	A1&A3&!B1&!B2	0.0100	n/a	n/a	-0.0657
A2(LH)	!A1&A3&!B1&B2	0.0100	n/a	n/a	-0.0215
A2(LH)	!A1&A3&B1&!B2	0.0100	n/a	n/a	-0.0215
A2(LH)	!A1&A3&B1&B2	0.0100	n/a	n/a	-0.0215
A2(LH)	A1&!A3&!B1&B2	0.0100	n/a	n/a	-0.0585
A2(LH)	A1&!A3&B1&!B2	0.0100	n/a	n/a	-0.0585
A2(LH)	A1&!A3&B1&B2	0.0100	n/a	n/a	-0.0585
A2(LH)	A1&A3&!B1&B2	0.0100	n/a	n/a	-0.0517
A2(LH)	A1&A3&B1&!B2	0.0100	n/a	n/a	-0.0517
A2(LH)	A1&A3&B1&B2	0.0100	n/a	n/a	-0.0517
A3(HL)	!A1&!A2&!B1&!B2	0.0100	n/a	n/a	0.0762
A3(HL)	!A1&A2&!B1&!B2	0.0100	n/a	n/a	0.0703
A3(HL)	A1&!A2&!B1&!B2	0.0100	n/a	n/a	0.0704
A3(HL)	A1&A2&!B1&!B2	0.0100	n/a	n/a	0.0703
A3(HL)	!A1&A2&!B1&B2	0.0100	n/a	n/a	0.0703
A3(HL)	!A1&A2&B1&!B2	0.0100	n/a	n/a	0.0703
A3(HL)	!A1&A2&B1&B2	0.0100	n/a	n/a	0.0703
A3(HL)	A1&!A2&!B1&B2	0.0100	n/a	n/a	0.0704
A3(HL)	A1&!A2&B1&!B2	0.0100	n/a	n/a	0.0704
A3(HL)	A1&!A2&B1&B2	0.0100	n/a	n/a	0.0703
A3(HL)	A1&A2&!B1&B2	0.0100	n/a	n/a	0.0703
A3(HL)	A1&A2&B1&!B2	0.0100	n/a	n/a	0.0704
A3(HL)	A1&A2&B1&B2	0.0100	n/a	n/a	0.0703
A2(HL)	!A1&!A3&!B1&!B2	0.0100	n/a	n/a	0.0764
A2(HL)	!A1&A3&!B1&!B2	0.0100	n/a	n/a	0.0705
A2(HL)	A1&!A3&!B1&!B2	0.0100	n/a	n/a	0.0705
A2(HL)	A1&A3&!B1&!B2	0.0100	n/a	n/a	0.0429
A2(HL)	!A1&A3&!B1&B2	0.0100	n/a	n/a	0.0486
A2(HL)	!A1&A3&B1&!B2	0.0100	n/a	n/a	0.0486
A2(HL)	!A1&A3&B1&B2	0.0100	n/a	n/a	0.0486
A2(HL)	A1&!A3&!B1&B2	0.0100	n/a	n/a	0.0705
A2(HL)	A1&!A3&B1&!B2	0.0100	n/a	n/a	0.0705

continues on next page

Table 101 – continued from previous page

A2(HL)	A1&!A3&B1&B2	0.0100	n/a	n/a	0.0705
A2(HL)	A1&A3&!B1&B2	0.0100	n/a	n/a	0.0429
A2(HL)	A1&A3&B1&!B2	0.0100	n/a	n/a	0.0429
A2(HL)	A1&A3&B1&B2	0.0100	n/a	n/a	0.0429
B1(HL)	!A1&!A2&!A3&!B2	0.0100	n/a	n/a	0.0800
B1(HL)	!A1&!A2&!A3&B2	0.0100	n/a	n/a	0.0805
B1(HL)	!A1&!A2&A3&B2	0.0100	n/a	n/a	0.0586
B1(HL)	!A1&A2&!A3&B2	0.0100	n/a	n/a	0.0586
B1(HL)	!A1&A2&A3&B2	0.0100	n/a	n/a	0.0586
B1(HL)	A1&!A2&!A3&B2	0.0100	n/a	n/a	0.0586
B1(HL)	A1&!A2&A3&B2	0.0100	n/a	n/a	0.0586
B1(HL)	A1&A2&!A3&B2	0.0100	n/a	n/a	0.0586
B1(HL)	A1&A2&A3&B2	0.0100	n/a	n/a	0.0586
B2(LH)	!A1&!A2&!A3&!B1	0.0100	n/a	n/a	0.0969
B2(LH)	!A1&!A2&!A3&B1	0.0100	n/a	n/a	-0.0770
B2(LH)	!A1&!A2&A3&B1	0.0100	n/a	n/a	-0.0584
B2(LH)	!A1&A2&!A3&B1	0.0100	n/a	n/a	-0.0584
B2(LH)	!A1&A2&A3&B1	0.0100	n/a	n/a	-0.0584
B2(LH)	A1&!A2&!A3&B1	0.0100	n/a	n/a	-0.0584
B2(LH)	A1&!A2&A3&B1	0.0100	n/a	n/a	-0.0584
B2(LH)	A1&A2&!A3&B1	0.0100	n/a	n/a	-0.0584
B2(LH)	A1&A2&A3&B1	0.0100	n/a	n/a	-0.0584
B2(HL)	!A1&!A2&!A3&!B1	0.0100	n/a	n/a	0.0796
B2(HL)	!A1&!A2&!A3&B1	0.0100	n/a	n/a	0.0804
B2(HL)	!A1&!A2&A3&B1	0.0100	n/a	n/a	0.0703
B2(HL)	!A1&A2&!A3&B1	0.0100	n/a	n/a	0.0703
B2(HL)	!A1&A2&A3&B1	0.0100	n/a	n/a	0.0704
B2(HL)	A1&!A2&!A3&B1	0.0100	n/a	n/a	0.0702
B2(HL)	A1&!A2&A3&B1	0.0100	n/a	n/a	0.0703
B2(HL)	A1&A2&!A3&B1	0.0100	n/a	n/a	0.0704
B2(HL)	A1&A2&A3&B1	0.0100	n/a	n/a	0.0703
A1(HL)	!A2&!A3&!B1&!B2	0.0100	n/a	n/a	0.0765
A1(HL)	!A2&A3&!B1&!B2	0.0100	n/a	n/a	0.0707
A1(HL)	A2&!A3&!B1&!B2	0.0100	n/a	n/a	0.0707
A1(HL)	A2&A3&!B1&!B2	0.0100	n/a	n/a	0.0708
A1(HL)	!A2&A3&!B1&B2	0.0100	n/a	n/a	0.0986
A1(HL)	!A2&A3&B1&!B2	0.0100	n/a	n/a	0.0986
A1(HL)	!A2&A3&B1&B2	0.0100	n/a	n/a	0.0987
A1(HL)	A2&!A3&!B1&B2	0.0100	n/a	n/a	0.0512
A1(HL)	A2&!A3&B1&!B2	0.0100	n/a	n/a	0.0512
A1(HL)	A2&!A3&B1&B2	0.0100	n/a	n/a	0.0512
A1(HL)	A2&A3&!B1&B2	0.0100	n/a	n/a	0.0512
A1(HL)	A2&A3&B1&!B2	0.0100	n/a	n/a	0.0512
A1(HL)	A2&A3&B1&B2	0.0100	n/a	n/a	0.0512
B1(LH)	!A1&!A2&!A3&!B2	0.0100	n/a	n/a	0.0961
B1(LH)	!A1&!A2&!A3&B2	0.0100	n/a	n/a	-0.0777
B1(LH)	!A1&!A2&A3&B2	0.0100	n/a	n/a	-0.0203
B1(LH)	!A1&A2&!A3&B2	0.0100	n/a	n/a	-0.0203
B1(LH)	!A1&A2&A3&B2	0.0100	n/a	n/a	-0.0203
B1(LH)	A1&!A2&!A3&B2	0.0100	n/a	n/a	-0.0203
B1(LH)	A1&!A2&A3&B2	0.0100	n/a	n/a	-0.0203
B1(LH)	A1&A2&!A3&B2	0.0100	n/a	n/a	-0.0203

continues on next page

Table 101 – continued from previous page

B1(LH)	A1&A2&A3&B2	0.0100	n/a	n/a	-0.0203

LEAKAGE POWER

When Condition	Power (nW)
!A1&!A2&!A3&!B1&!B2	0.1510
!A1&!A2&!A3&!B1&B2	0.3516
!A1&!A2&!A3&B1&!B2	0.3516
!A1&!A2&!A3&B1&B2	0.3526
!A1&!A2&A3&!B1&!B2	0.1518
!A1&A2&!A3&!B1&!B2	0.1518
!A1&A2&A3&!B1&!B2	0.1518
A1&!A2&!A3&!B1&!B2	0.1518
A1&!A2&A3&!B1&!B2	0.1518
A1&A2&!A3&!B1&!B2	0.1518
A1&A2&A3&!B1&!B2	0.1518
!A1&!A2&A3&!B1&B2	0.3691
!A1&!A2&A3&B1&!B2	0.2978
!A1&!A2&A3&B1&B2	0.2978
!A1&A2&!A3&!B1&B2	0.2984
!A1&A2&!A3&B1&!B2	0.2270
!A1&A2&!A3&B1&B2	0.2270
!A1&A2&A3&!B1&B2	0.2984
!A1&A2&A3&B1&!B2	0.2270
!A1&A2&A3&B1&B2	0.2270
A1&!A2&!A3&!B1&B2	0.2270
A1&!A2&!A3&B1&!B2	0.1557
A1&!A2&!A3&B1&B2	0.1557
A1&!A2&A3&!B1&B2	0.2270
A1&!A2&A3&B1&!B2	0.1557
A1&!A2&A3&B1&B2	0.1557
A1&A2&!A3&!B1&B2	0.2270
A1&A2&!A3&B1&!B2	0.1557
A1&A2&!A3&B1&B2	0.1557
A1&A2&A3&!B1&B2	0.2270
A1&A2&A3&B1&!B2	0.1557
A1&A2&A3&B1&B2	0.1557

gf180mcu_fd_sc_mcu7t5v0__oai32_4

gf180mcu_fd_sc_mcu7t5v0__oai32_4 symbol

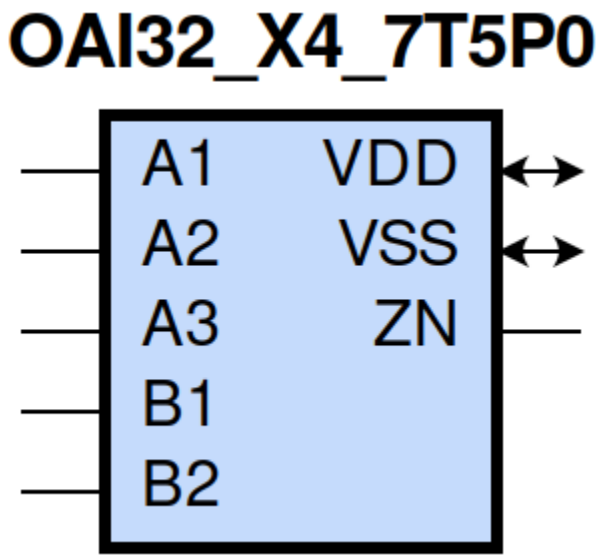

gf180mcu_fd_sc_mcu7t5v0__oai32_4 schematic

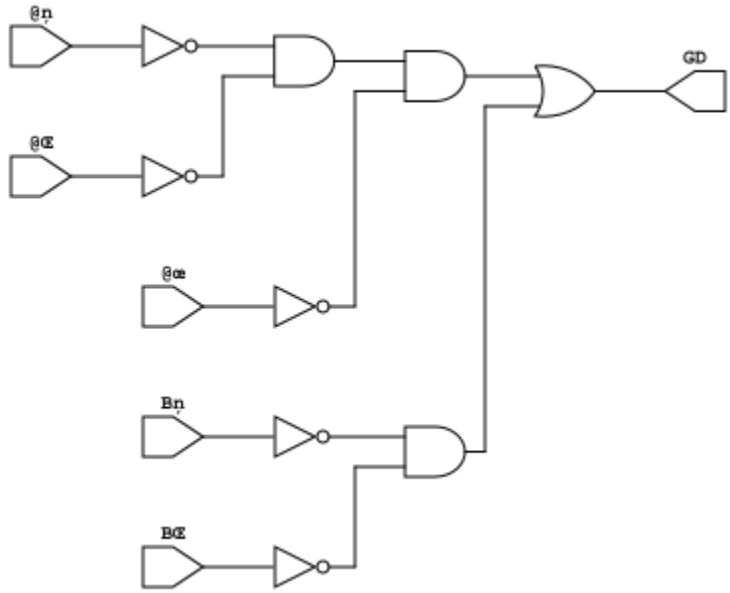

gf180mcu_fd_sc_mcu7t5v0__oai32_4 layout

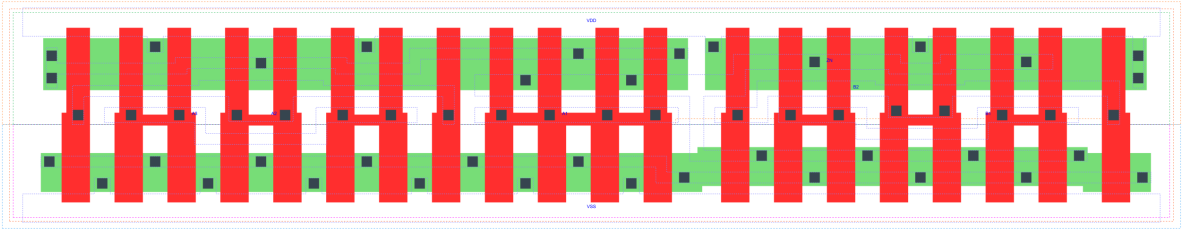

OAI32_X4 is a 3-input OR and a 2-input OR into 2-input NAND, NAND[OR(A1,A2,A3),OR(B1,B2)], 4X drive strength

Attributes

Attribute	Value
area	94.393600 μm^2

OUTPUT FUNCTIONS

Output Pin	Function
ZN	(((!A1)&(!A2)&(!A3))|((!B1)&(!B2)))

TRUTH TABLE FOR ZN

A1	A2	A3	B1	B2	ZN
0	0	0	?	?	1
?	?	?	0	0	1
1	?	?	1	?	0
1	?	?	?	1	0
?	1	?	1	?	0
?	1	?	?	1	0
?	?	1	1	?	0
?	?	1	?	1	0

FUNCTIONAL SCHEMATIC

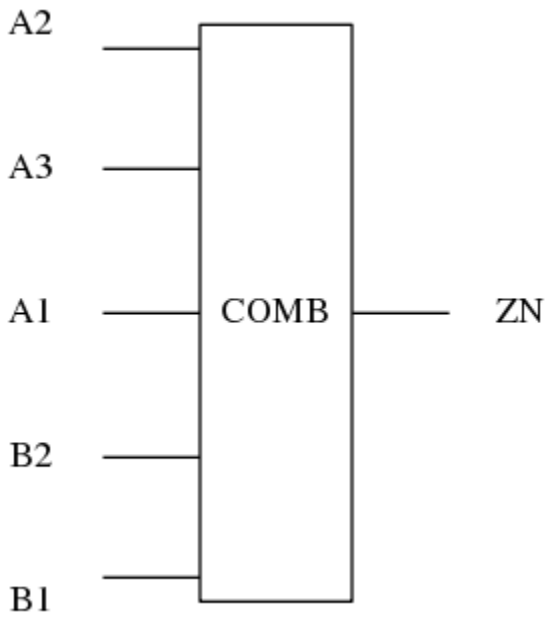

PIN CAPACITANCE (pf)

Pin	Type	Capacitance (pf)
A2	input	0.0185
A3	input	0.0176
A1	input	0.0175
B2	input	0.0188
B1	input	0.0185

DELAY AND OUTPUT TRANSITION TIME corresponding to min slew and load

Input Pin	Output	When Condition	Tin (ns)	Out Load (pf)	Delay (ns)	Tout (ns)
A2(HL)	ZN(LH)	!A1&!A3&!B1&B2	0.0100	0.0010	0.3974	0.3314
A2(HL)	ZN(LH)	!A1&!A3&B1&!B2	0.0100	0.0010	0.3750	0.2597
A2(HL)	ZN(LH)	!A1&!A3&B1&B2	0.0100	0.0010	0.4129	0.2890
A2(LH)	ZN(HL)	!A1&!A3&!B1&B2	0.0100	0.0010	0.1422	0.0707
A2(LH)	ZN(HL)	!A1&!A3&B1&!B2	0.0100	0.0010	0.1172	0.0552
A2(LH)	ZN(HL)	!A1&!A3&B1&B2	0.0100	0.0010	0.0973	0.0513
A3(LH)	ZN(HL)	!A1&!A2&!B1&B2	0.0100	0.0010	0.1495	0.0824
A3(LH)	ZN(HL)	!A1&!A2&B1&!B2	0.0100	0.0010	0.1214	0.0655
A3(LH)	ZN(HL)	!A1&!A2&B1&B2	0.0100	0.0010	0.0987	0.0592
A3(HL)	ZN(LH)	!A1&!A2&!B1&B2	0.0100	0.0010	0.4235	0.3316

continues on next page

Table 103 – continued from previous page

A3(HL)	ZN(LH)	!A1&!A2&B1&!B2	0.0100	0.0010	0.4012	0.2597
A3(HL)	ZN(LH)	!A1&!A2&B1&B2	0.0100	0.0010	0.4390	0.2890
A1(HL)	ZN(LH)	!A2&!A3&!B1&B2	0.0100	0.0010	0.3110	0.3308
A1(HL)	ZN(LH)	!A2&!A3&B1&!B2	0.0100	0.0010	0.2885	0.2588
A1(HL)	ZN(LH)	!A2&!A3&B1&B2	0.0100	0.0010	0.3263	0.2883
A1(LH)	ZN(HL)	!A2&!A3&!B1&B2	0.0100	0.0010	0.1144	0.0515
A1(LH)	ZN(HL)	!A2&!A3&B1&!B2	0.0100	0.0010	0.0932	0.0370
A1(LH)	ZN(HL)	!A2&!A3&B1&B2	0.0100	0.0010	0.0800	0.0369
B2(HL)	ZN(LH)	!A1&!A2&A3&!B1	0.0100	0.0010	0.1466	0.1497
B2(HL)	ZN(LH)	!A1&A2&!A3&!B1	0.0100	0.0010	0.1467	0.1363
B2(HL)	ZN(LH)	!A1&A2&A3&!B1	0.0100	0.0010	0.1458	0.1362
B2(HL)	ZN(LH)	A1&!A2&!A3&!B1	0.0100	0.0010	0.1377	0.0837
B2(HL)	ZN(LH)	A1&!A2&A3&!B1	0.0100	0.0010	0.1368	0.0836
B2(HL)	ZN(LH)	A1&A2&!A3&!B1	0.0100	0.0010	0.1368	0.0837
B2(HL)	ZN(LH)	A1&A2&A3&!B1	0.0100	0.0010	0.1363	0.0837
B2(LH)	ZN(HL)	!A1&!A2&A3&!B1	0.0100	0.0010	0.1114	0.0816
B2(LH)	ZN(HL)	!A1&A2&!A3&!B1	0.0100	0.0010	0.1020	0.0707
B2(LH)	ZN(HL)	!A1&A2&A3&!B1	0.0100	0.0010	0.0847	0.0541
B2(LH)	ZN(HL)	A1&!A2&!A3&!B1	0.0100	0.0010	0.0739	0.0513
B2(LH)	ZN(HL)	A1&!A2&A3&!B1	0.0100	0.0010	0.0630	0.0396
B2(LH)	ZN(HL)	A1&A2&!A3&!B1	0.0100	0.0010	0.0630	0.0395
B2(LH)	ZN(HL)	A1&A2&A3&!B1	0.0100	0.0010	0.0595	0.0364
B1(HL)	ZN(LH)	!A1&!A2&A3&!B2	0.0100	0.0010	0.1190	0.1491
B1(HL)	ZN(LH)	!A1&A2&!A3&!B2	0.0100	0.0010	0.1190	0.1358
B1(HL)	ZN(LH)	!A1&A2&A3&!B2	0.0100	0.0010	0.1181	0.1359
B1(HL)	ZN(LH)	A1&!A2&!A3&!B2	0.0100	0.0010	0.1101	0.0832
B1(HL)	ZN(LH)	A1&!A2&A3&!B2	0.0100	0.0010	0.1091	0.0832
B1(HL)	ZN(LH)	A1&A2&!A3&!B2	0.0100	0.0010	0.1092	0.0832
B1(HL)	ZN(LH)	A1&A2&A3&!B2	0.0100	0.0010	0.1086	0.0832
B1(LH)	ZN(HL)	!A1&!A2&A3&!B2	0.0100	0.0010	0.0849	0.0644
B1(LH)	ZN(HL)	!A1&A2&!A3&!B2	0.0100	0.0010	0.0790	0.0545
B1(LH)	ZN(HL)	!A1&A2&A3&!B2	0.0100	0.0010	0.0668	0.0415
B1(LH)	ZN(HL)	A1&!A2&!A3&!B2	0.0100	0.0010	0.0554	0.0350
B1(LH)	ZN(HL)	A1&!A2&A3&!B2	0.0100	0.0010	0.0490	0.0275
B1(LH)	ZN(HL)	A1&A2&!A3&!B2	0.0100	0.0010	0.0490	0.0275
B1(LH)	ZN(HL)	A1&A2&A3&!B2	0.0100	0.0010	0.0467	0.0255

DYNAMIC ENERGY

Input Pin	When Condition	Tin (ns)	Output	Out Load (pf)	Energy (uW/MHz)
A1	!A2&!A3&!B1&B2	0.0100	ZN(LH)	0.0010	1.0622
A1	!A2&!A3&B1&!B2	0.0100	ZN(LH)	0.0010	0.9546
A1	!A2&!A3&B1&B2	0.0100	ZN(LH)	0.0010	1.0444
B2	!A1&!A2&A3&!B1	0.0100	ZN(LH)	0.0010	0.8953
B2	!A1&A2&!A3&!B1	0.0100	ZN(LH)	0.0010	0.7902
B2	!A1&A2&A3&!B1	0.0100	ZN(LH)	0.0010	0.7877
B2	A1&!A2&!A3&!B1	0.0100	ZN(LH)	0.0010	0.6172

continues on next page

Table 104 – continued from previous page

B2	A1&!A2&A3&!B1	0.0100	ZN(LH)	0.0010	0.6146
B2	A1&A2&!A3&!B1	0.0100	ZN(LH)	0.0010	0.6147
B2	A1&A2&A3&!B1	0.0100	ZN(LH)	0.0010	0.6133
B1	!A1&!A2&A3&!B2	0.0100	ZN(LH)	0.0010	0.7871
B1	!A1&A2&!A3&!B2	0.0100	ZN(LH)	0.0010	0.6821
B1	!A1&A2&A3&!B2	0.0100	ZN(LH)	0.0010	0.6792
B1	A1&!A2&!A3&!B2	0.0100	ZN(LH)	0.0010	0.5088
B1	A1&!A2&A3&!B2	0.0100	ZN(LH)	0.0010	0.5061
B1	A1&A2&!A3&!B2	0.0100	ZN(LH)	0.0010	0.5062
B1	A1&A2&A3&!B2	0.0100	ZN(LH)	0.0010	0.5046
A2	!A1&!A3&!B1&B2	0.0100	ZN(LH)	0.0010	1.2351
A2	!A1&!A3&B1&!B2	0.0100	ZN(LH)	0.0010	1.1276
A2	!A1&!A3&B1&B2	0.0100	ZN(LH)	0.0010	1.2177
B1	!A1&!A2&A3&!B2	0.0100	ZN(HL)	0.0010	0.2258
B1	!A1&A2&!A3&!B2	0.0100	ZN(HL)	0.0010	0.1263
B1	!A1&A2&A3&!B2	0.0100	ZN(HL)	0.0010	0.1262
B1	A1&!A2&!A3&!B2	0.0100	ZN(HL)	0.0010	0.0184
B1	A1&!A2&A3&!B2	0.0100	ZN(HL)	0.0010	0.0185
B1	A1&A2&!A3&!B2	0.0100	ZN(HL)	0.0010	0.0184
B1	A1&A2&A3&!B2	0.0100	ZN(HL)	0.0010	0.0184
A3	!A1&!A2&!B1&B2	0.0100	ZN(HL)	0.0010	0.3162
A3	!A1&!A2&B1&!B2	0.0100	ZN(HL)	0.0010	0.2140
A3	!A1&!A2&B1&B2	0.0100	ZN(HL)	0.0010	0.2140
A1	!A2&!A3&!B1&B2	0.0100	ZN(HL)	0.0010	0.1219
A1	!A2&!A3&B1&!B2	0.0100	ZN(HL)	0.0010	0.0169
A1	!A2&!A3&B1&B2	0.0100	ZN(HL)	0.0010	0.0171
B2	!A1&!A2&A3&!B1	0.0100	ZN(HL)	0.0010	0.3177
B2	!A1&A2&!A3&!B1	0.0100	ZN(HL)	0.0010	0.2184
B2	!A1&A2&A3&!B1	0.0100	ZN(HL)	0.0010	0.2187
B2	A1&!A2&!A3&!B1	0.0100	ZN(HL)	0.0010	0.1124
B2	A1&!A2&A3&!B1	0.0100	ZN(HL)	0.0010	0.1124
B2	A1&A2&!A3&!B1	0.0100	ZN(HL)	0.0010	0.1125
B2	A1&A2&A3&!B1	0.0100	ZN(HL)	0.0010	0.1125
A2	!A1&!A3&!B1&B2	0.0100	ZN(HL)	0.0010	0.2267
A2	!A1&!A3&B1&!B2	0.0100	ZN(HL)	0.0010	0.1245
A2	!A1&!A3&B1&B2	0.0100	ZN(HL)	0.0010	0.1241
A3	!A1&!A2&!B1&B2	0.0100	ZN(LH)	0.0010	1.3406
A3	!A1&!A2&B1&!B2	0.0100	ZN(LH)	0.0010	1.2333
A3	!A1&!A2&B1&B2	0.0100	ZN(LH)	0.0010	1.3228
A3(LH)	!A1&!A2&!B1&!B2	0.0100	n/a	n/a	-0.1402
A3(LH)	!A1&A2&!B1&!B2	0.0100	n/a	n/a	-0.1360
A3(LH)	A1&!A2&!B1&!B2	0.0100	n/a	n/a	-0.1162
A3(LH)	A1&A2&!B1&!B2	0.0100	n/a	n/a	-0.1303
A3(LH)	!A1&A2&!B1&B2	0.0100	n/a	n/a	-0.1224
A3(LH)	!A1&A2&B1&!B2	0.0100	n/a	n/a	-0.1225
A3(LH)	!A1&A2&B1&B2	0.0100	n/a	n/a	-0.1224
A3(LH)	A1&!A2&!B1&B2	0.0100	n/a	n/a	-0.1151
A3(LH)	A1&!A2&B1&!B2	0.0100	n/a	n/a	-0.1151
A3(LH)	A1&!A2&B1&B2	0.0100	n/a	n/a	-0.1151
A3(LH)	A1&A2&!B1&B2	0.0100	n/a	n/a	-0.1303
A3(LH)	A1&A2&B1&!B2	0.0100	n/a	n/a	-0.1303
A3(LH)	A1&A2&B1&B2	0.0100	n/a	n/a	-0.1303

continues on next page

Table 104 – continued from previous page

A1(LH)	!A2&!A3&!B1&!B2	0.0100	n/a	n/a	-0.1414
A1(LH)	!A2&A3&!B1&!B2	0.0100	n/a	n/a	-0.1166
A1(LH)	A2&!A3&!B1&!B2	0.0100	n/a	n/a	-0.1292
A1(LH)	A2&A3&!B1&!B2	0.0100	n/a	n/a	-0.1263
A1(LH)	!A2&A3&!B1&B2	0.0100	n/a	n/a	-0.0370
A1(LH)	!A2&A3&B1&!B2	0.0100	n/a	n/a	-0.0370
A1(LH)	!A2&A3&B1&B2	0.0100	n/a	n/a	-0.0370
A1(LH)	A2&!A3&!B1&B2	0.0100	n/a	n/a	-0.0361
A1(LH)	A2&!A3&B1&!B2	0.0100	n/a	n/a	-0.0361
A1(LH)	A2&!A3&B1&B2	0.0100	n/a	n/a	-0.0361
A1(LH)	A2&A3&!B1&B2	0.0100	n/a	n/a	-0.0361
A1(LH)	A2&A3&B1&!B2	0.0100	n/a	n/a	-0.0361
A1(LH)	A2&A3&B1&B2	0.0100	n/a	n/a	-0.0361
A2(LH)	!A1&!A3&!B1&!B2	0.0100	n/a	n/a	-0.1411
A2(LH)	!A1&A3&!B1&!B2	0.0100	n/a	n/a	-0.1369
A2(LH)	A1&!A3&!B1&!B2	0.0100	n/a	n/a	-0.1283
A2(LH)	A1&A3&!B1&!B2	0.0100	n/a	n/a	-0.1219
A2(LH)	!A1&A3&!B1&B2	0.0100	n/a	n/a	-0.0440
A2(LH)	!A1&A3&B1&!B2	0.0100	n/a	n/a	-0.0440
A2(LH)	!A1&A3&B1&B2	0.0100	n/a	n/a	-0.0440
A2(LH)	A1&!A3&!B1&B2	0.0100	n/a	n/a	-0.1078
A2(LH)	A1&!A3&B1&!B2	0.0100	n/a	n/a	-0.1078
A2(LH)	A1&!A3&B1&B2	0.0100	n/a	n/a	-0.1078
A2(LH)	A1&A3&!B1&B2	0.0100	n/a	n/a	-0.0918
A2(LH)	A1&A3&B1&!B2	0.0100	n/a	n/a	-0.0917
A2(LH)	A1&A3&B1&B2	0.0100	n/a	n/a	-0.0917
A3(HL)	!A1&!A2&!B1&!B2	0.0100	n/a	n/a	0.1527
A3(HL)	!A1&A2&!B1&!B2	0.0100	n/a	n/a	0.1407
A3(HL)	A1&!A2&!B1&!B2	0.0100	n/a	n/a	0.1409
A3(HL)	A1&A2&!B1&!B2	0.0100	n/a	n/a	0.1408
A3(HL)	!A1&A2&!B1&B2	0.0100	n/a	n/a	0.1408
A3(HL)	!A1&A2&B1&!B2	0.0100	n/a	n/a	0.1408
A3(HL)	!A1&A2&B1&B2	0.0100	n/a	n/a	0.1408
A3(HL)	A1&!A2&!B1&B2	0.0100	n/a	n/a	0.1409
A3(HL)	A1&!A2&B1&!B2	0.0100	n/a	n/a	0.1409
A3(HL)	A1&!A2&B1&B2	0.0100	n/a	n/a	0.1409
A3(HL)	A1&A2&!B1&B2	0.0100	n/a	n/a	0.1406
A3(HL)	A1&A2&B1&!B2	0.0100	n/a	n/a	0.1406
A3(HL)	A1&A2&B1&B2	0.0100	n/a	n/a	0.1407
A2(HL)	!A1&!A3&!B1&!B2	0.0100	n/a	n/a	0.1530
A2(HL)	!A1&A3&!B1&!B2	0.0100	n/a	n/a	0.1407
A2(HL)	A1&!A3&!B1&!B2	0.0100	n/a	n/a	0.1412
A2(HL)	A1&A3&!B1&!B2	0.0100	n/a	n/a	0.0771
A2(HL)	!A1&A3&!B1&B2	0.0100	n/a	n/a	0.1012
A2(HL)	!A1&A3&B1&!B2	0.0100	n/a	n/a	0.1012
A2(HL)	!A1&A3&B1&B2	0.0100	n/a	n/a	0.1012
A2(HL)	A1&!A3&!B1&B2	0.0100	n/a	n/a	0.1411
A2(HL)	A1&!A3&B1&!B2	0.0100	n/a	n/a	0.1411
A2(HL)	A1&!A3&B1&B2	0.0100	n/a	n/a	0.1411
A2(HL)	A1&A3&!B1&B2	0.0100	n/a	n/a	0.0771
A2(HL)	A1&A3&B1&!B2	0.0100	n/a	n/a	0.0771
A2(HL)	A1&A3&B1&B2	0.0100	n/a	n/a	0.0771

continues on next page

Table 104 – continued from previous page

B1(HL)	!A1&!A2&!A3&!B2	0.0100	n/a	n/a	0.1595
B1(HL)	!A1&!A2&!A3&B2	0.0100	n/a	n/a	0.1610
B1(HL)	!A1&!A2&A3&B2	0.0100	n/a	n/a	0.1095
B1(HL)	!A1&A2&!A3&B2	0.0100	n/a	n/a	0.1094
B1(HL)	!A1&A2&A3&B2	0.0100	n/a	n/a	0.1094
B1(HL)	A1&!A2&!A3&B2	0.0100	n/a	n/a	0.1094
B1(HL)	A1&!A2&A3&B2	0.0100	n/a	n/a	0.1094
B1(HL)	A1&A2&!A3&B2	0.0100	n/a	n/a	0.1094
B1(HL)	A1&A2&A3&B2	0.0100	n/a	n/a	0.1094
B2(LH)	!A1&!A2&!A3&!B1	0.0100	n/a	n/a	0.1839
B2(LH)	!A1&!A2&!A3&B1	0.0100	n/a	n/a	-0.1542
B2(LH)	!A1&!A2&A3&B1	0.0100	n/a	n/a	-0.1171
B2(LH)	!A1&A2&!A3&B1	0.0100	n/a	n/a	-0.1171
B2(LH)	!A1&A2&A3&B1	0.0100	n/a	n/a	-0.1171
B2(LH)	A1&!A2&!A3&B1	0.0100	n/a	n/a	-0.1171
B2(LH)	A1&!A2&A3&B1	0.0100	n/a	n/a	-0.1171
B2(LH)	A1&A2&!A3&B1	0.0100	n/a	n/a	-0.1171
B2(LH)	A1&A2&A3&B1	0.0100	n/a	n/a	-0.1171
B2(HL)	!A1&!A2&!A3&!B1	0.0100	n/a	n/a	0.1591
B2(HL)	!A1&!A2&!A3&B1	0.0100	n/a	n/a	0.1609
B2(HL)	!A1&!A2&A3&B1	0.0100	n/a	n/a	0.1406
B2(HL)	!A1&A2&!A3&B1	0.0100	n/a	n/a	0.1406
B2(HL)	!A1&A2&A3&B1	0.0100	n/a	n/a	0.1406
B2(HL)	A1&!A2&!A3&B1	0.0100	n/a	n/a	0.1406
B2(HL)	A1&!A2&A3&B1	0.0100	n/a	n/a	0.1406
B2(HL)	A1&A2&!A3&B1	0.0100	n/a	n/a	0.1406
B2(HL)	A1&A2&A3&B1	0.0100	n/a	n/a	0.1406
A1(HL)	!A2&!A3&!B1&!B2	0.0100	n/a	n/a	0.1533
A1(HL)	!A2&A3&!B1&!B2	0.0100	n/a	n/a	0.1415
A1(HL)	A2&!A3&!B1&!B2	0.0100	n/a	n/a	0.1415
A1(HL)	A2&A3&!B1&!B2	0.0100	n/a	n/a	0.1415
A1(HL)	!A2&A3&!B1&B2	0.0100	n/a	n/a	0.2120
A1(HL)	!A2&A3&B1&!B2	0.0100	n/a	n/a	0.2120
A1(HL)	!A2&A3&B1&B2	0.0100	n/a	n/a	0.2121
A1(HL)	A2&!A3&!B1&B2	0.0100	n/a	n/a	0.1123
A1(HL)	A2&!A3&B1&!B2	0.0100	n/a	n/a	0.1123
A1(HL)	A2&!A3&B1&B2	0.0100	n/a	n/a	0.1122
A1(HL)	A2&A3&!B1&B2	0.0100	n/a	n/a	0.1122
A1(HL)	A2&A3&B1&!B2	0.0100	n/a	n/a	0.1122
A1(HL)	A2&A3&B1&B2	0.0100	n/a	n/a	0.1123
B1(LH)	!A1&!A2&!A3&!B2	0.0100	n/a	n/a	0.1825
B1(LH)	!A1&!A2&!A3&B2	0.0100	n/a	n/a	-0.1554
B1(LH)	!A1&!A2&A3&B2	0.0100	n/a	n/a	-0.0403
B1(LH)	!A1&A2&!A3&B2	0.0100	n/a	n/a	-0.0403
B1(LH)	!A1&A2&A3&B2	0.0100	n/a	n/a	-0.0404
B1(LH)	A1&!A2&!A3&B2	0.0100	n/a	n/a	-0.0403
B1(LH)	A1&!A2&A3&B2	0.0100	n/a	n/a	-0.0404
B1(LH)	A1&A2&!A3&B2	0.0100	n/a	n/a	-0.0404
B1(LH)	A1&A2&A3&B2	0.0100	n/a	n/a	-0.0403

LEAKAGE POWER

When Condition	Power (nW)
!A1&!A2&!A3&!B1&!B2	0.2519
!A1&!A2&!A3&!B1&B2	0.6525
!A1&!A2&!A3&B1&!B2	0.6525
!A1&!A2&!A3&B1&B2	0.6545
!A1&!A2&A3&!B1&!B2	0.2536
!A1&A2&!A3&!B1&!B2	0.2536
!A1&A2&A3&!B1&!B2	0.2536
A1&!A2&!A3&!B1&!B2	0.2536
A1&!A2&A3&!B1&!B2	0.2537
A1&A2&!A3&!B1&!B2	0.2537
A1&A2&A3&!B1&!B2	0.2537
!A1&!A2&A3&!B1&B2	0.6883
!A1&!A2&A3&B1&!B2	0.5455
!A1&!A2&A3&B1&B2	0.5455
!A1&A2&!A3&!B1&B2	0.5468
!A1&A2&!A3&B1&!B2	0.4041
!A1&A2&!A3&B1&B2	0.4041
!A1&A2&A3&!B1&B2	0.5468
!A1&A2&A3&B1&!B2	0.4041
!A1&A2&A3&B1&B2	0.4041
A1&!A2&!A3&!B1&B2	0.4041
A1&!A2&!A3&B1&!B2	0.2614
A1&!A2&!A3&B1&B2	0.2614
A1&!A2&A3&!B1&B2	0.4042
A1&!A2&A3&B1&!B2	0.2614
A1&!A2&A3&B1&B2	0.2614
A1&A2&!A3&!B1&B2	0.4042
A1&A2&!A3&B1&!B2	0.2614
A1&A2&!A3&B1&B2	0.2614
A1&A2&A3&!B1&B2	0.4042
A1&A2&A3&B1&!B2	0.2614
A1&A2&A3&B1&B2	0.2614

gf180mcu_fd_sc_mcu7t5v0__oai33_1

gf180mcu_fd_sc_mcu7t5v0__oai33_1 symbol

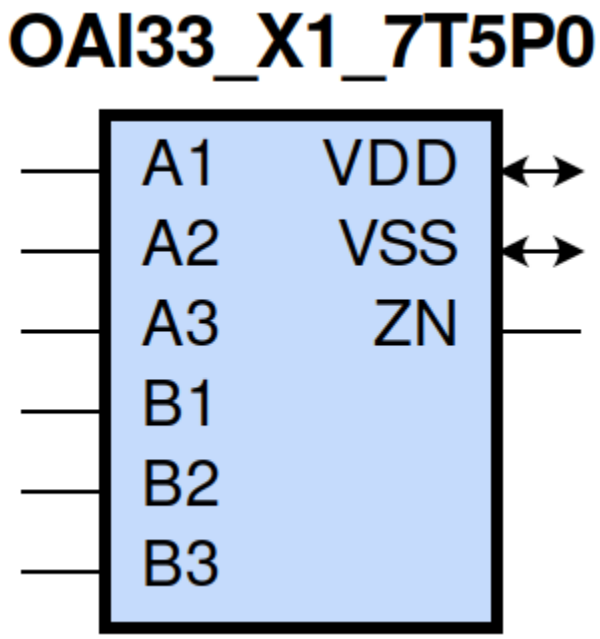

gf180mcu_fd_sc_mcu7t5v0__oai33_1 schematic

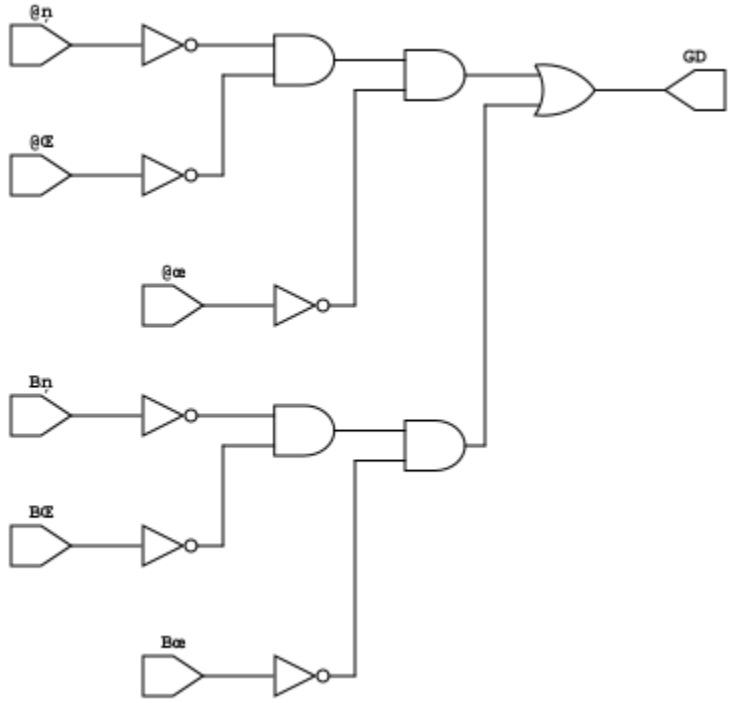

gf180mcu_fd_sc_mcu7t5v0__oai33_1 layout

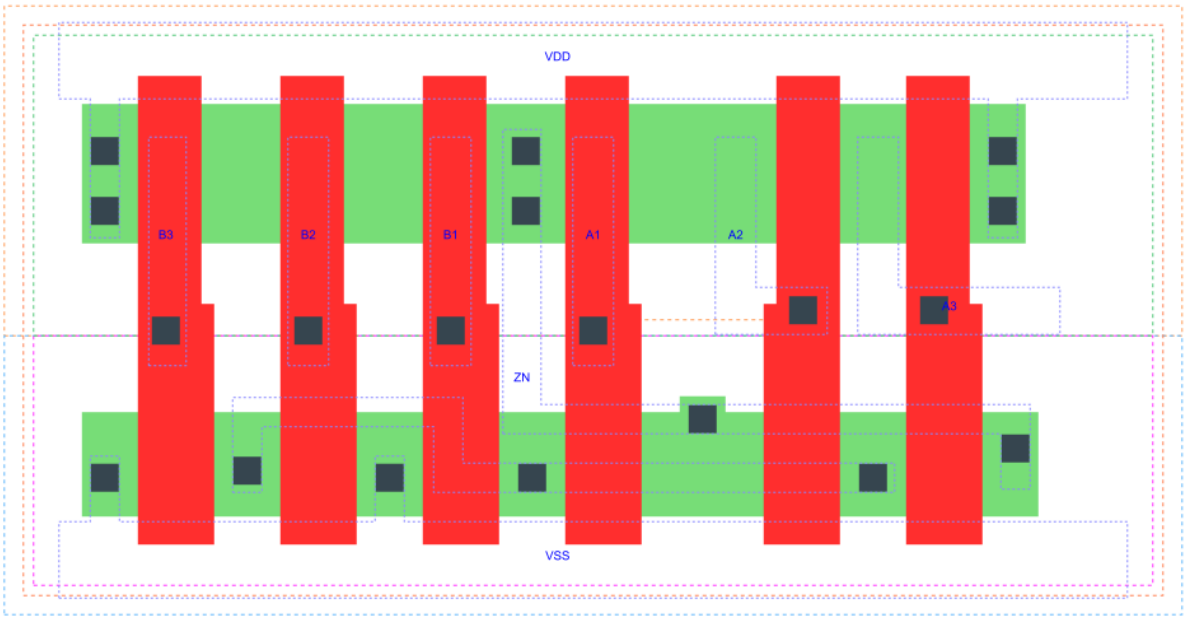

OAI33_X1 is a two 3-input OR into 2-input NAND, NAND[OR(A1,A2,A3),OR(B1,B2,B3], 1X drive strength

Attributes

Attribute	Value
area	32.928000 μm^2

OUTPUT FUNCTIONS

Output Pin	Function
ZN	(((!A1)&(!A2)&(!A3))|((!B1)&(!B2)&(!B3)))

TRUTH TABLE FOR ZN

A1	A2	A3	B1	B2	B3	ZN
0	0	0	?	?	?	1
?	?	?	0	0	0	1
1	?	?	1	?	?	0
1	?	?	?	1	?	0
1	?	?	?	?	1	0
?	1	?	1	?	?	0
?	1	?	?	1	?	0
?	1	?	?	?	1	0
?	?	1	1	?	?	0
?	?	1	?	1	?	0
?	?	1	?	?	1	0

FUNCTIONAL SCHEMATIC

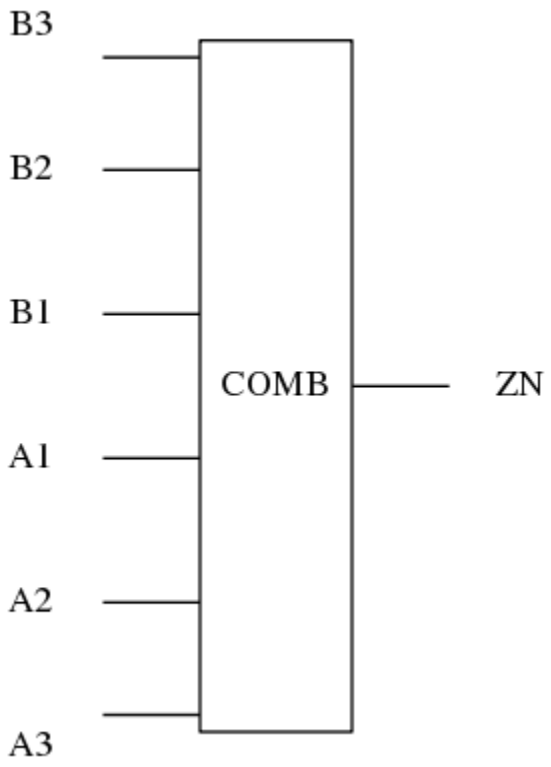

PIN CAPACITANCE (pf)

Pin	Type	Capacitance (pf)
B3	input	0.0044
B2	input	0.0043
B1	input	0.0046
A1	input	0.0047
A2	input	0.0045
A3	input	0.0047

DELAY AND OUTPUT TRANSITION TIME corresponding to min slew and load

Input Pin	Output	When Condition	Tin (ns)	Out Load (pf)	Delay (ns)	Tout (ns)
B3(HL)	ZN(LH)	!A1&!A2&A3&!B1&!B2	0.0100	0.0010	0.4902	0.4593
B3(HL)	ZN(LH)	!A1&A2&!A3&!B1&!B2	0.0100	0.0010	0.4896	0.4039
B3(HL)	ZN(LH)	!A1&A2&A3&!B1&!B2	0.0100	0.0010	0.5268	0.4326
B3(HL)	ZN(LH)	A1&!A2&!A3&!B1&!B2	0.0100	0.0010	0.4650	0.3225
B3(HL)	ZN(LH)	A1&!A2&A3&!B1&!B2	0.0100	0.0010	0.5028	0.3522
B3(HL)	ZN(LH)	A1&A2&!A3&!B1&!B2	0.0100	0.0010	0.5028	0.3522
B3(HL)	ZN(LH)	A1&A2&A3&!B1&!B2	0.0100	0.0010	0.5370	0.3808
B3(LH)	ZN(HL)	!A1&!A2&A3&!B1&!B2	0.0100	0.0010	0.1879	0.1112
B3(LH)	ZN(HL)	!A1&A2&!A3&!B1&!B2	0.0100	0.0010	0.1747	0.0990
B3(LH)	ZN(HL)	!A1&A2&A3&!B1&!B2	0.0100	0.0010	0.1393	0.0848
B3(LH)	ZN(HL)	A1&!A2&!A3&!B1&!B2	0.0100	0.0010	0.1450	0.0804
B3(LH)	ZN(HL)	A1&!A2&A3&!B1&!B2	0.0100	0.0010	0.1175	0.0709
B3(LH)	ZN(HL)	A1&A2&!A3&!B1&!B2	0.0100	0.0010	0.1175	0.0708
B3(LH)	ZN(HL)	A1&A2&A3&!B1&!B2	0.0100	0.0010	0.1131	0.0771
B2(HL)	ZN(LH)	!A1&!A2&A3&!B1&!B3	0.0100	0.0010	0.4655	0.4592
B2(HL)	ZN(LH)	!A1&A2&!A3&!B1&!B3	0.0100	0.0010	0.4647	0.4038
B2(HL)	ZN(LH)	!A1&A2&A3&!B1&!B3	0.0100	0.0010	0.5019	0.4326
B2(HL)	ZN(LH)	A1&!A2&!A3&!B1&!B3	0.0100	0.0010	0.4402	0.3224
B2(HL)	ZN(LH)	A1&!A2&A3&!B1&!B3	0.0100	0.0010	0.4779	0.3521
B2(HL)	ZN(LH)	A1&A2&!A3&!B1&!B3	0.0100	0.0010	0.4779	0.3521
B2(HL)	ZN(LH)	A1&A2&A3&!B1&!B3	0.0100	0.0010	0.5123	0.3808
B2(LH)	ZN(HL)	!A1&!A2&A3&!B1&!B3	0.0100	0.0010	0.1747	0.0977
B2(LH)	ZN(HL)	!A1&A2&!A3&!B1&!B3	0.0100	0.0010	0.1638	0.0858
B2(LH)	ZN(HL)	!A1&A2&A3&!B1&!B3	0.0100	0.0010	0.1329	0.0748
B2(LH)	ZN(HL)	A1&!A2&!A3&!B1&!B3	0.0100	0.0010	0.1373	0.0682
B2(LH)	ZN(HL)	A1&!A2&A3&!B1&!B3	0.0100	0.0010	0.1136	0.0613
B2(LH)	ZN(HL)	A1&A2&!A3&!B1&!B3	0.0100	0.0010	0.1136	0.0613
B2(LH)	ZN(HL)	A1&A2&A3&!B1&!B3	0.0100	0.0010	0.1094	0.0676
B1(LH)	ZN(HL)	!A1&!A2&A3&!B2&!B3	0.0100	0.0010	0.1493	0.0821
B1(LH)	ZN(HL)	!A1&A2&!A3&!B2&!B3	0.0100	0.0010	0.1409	0.0709
B1(LH)	ZN(HL)	!A1&A2&A3&!B2&!B3	0.0100	0.0010	0.1161	0.0633
B1(LH)	ZN(HL)	A1&!A2&!A3&!B2&!B3	0.0100	0.0010	0.1163	0.0535
B1(LH)	ZN(HL)	A1&!A2&A3&!B2&!B3	0.0100	0.0010	0.0983	0.0500
B1(LH)	ZN(HL)	A1&A2&!A3&!B2&!B3	0.0100	0.0010	0.0983	0.0500
B1(LH)	ZN(HL)	A1&A2&A3&!B2&!B3	0.0100	0.0010	0.0948	0.0564
B1(HL)	ZN(LH)	!A1&!A2&A3&!B2&!B3	0.0100	0.0010	0.4064	0.4592

continues on next page

Table 106 – continued from previous page

B1(HL)	ZN(LH)	!A1&A2&!A3&!B2&!B3	0.0100	0.0010	0.4057	0.4038
B1(HL)	ZN(LH)	!A1&A2&A3&!B2&!B3	0.0100	0.0010	0.4429	0.4326
B1(HL)	ZN(LH)	A1&!A2&!A3&!B2&!B3	0.0100	0.0010	0.3812	0.3223
B1(HL)	ZN(LH)	A1&!A2&A3&!B2&!B3	0.0100	0.0010	0.4190	0.3522
B1(HL)	ZN(LH)	A1&A2&!A3&!B2&!B3	0.0100	0.0010	0.4190	0.3522
B1(HL)	ZN(LH)	A1&A2&A3&!B2&!B3	0.0100	0.0010	0.4529	0.3805
A1(HL)	ZN(LH)	!A2&!A3&!B1&!B2&B3	0.0100	0.0010	0.2221	0.3016
A1(HL)	ZN(LH)	!A2&!A3&!B1&B2&!B3	0.0100	0.0010	0.2220	0.2521
A1(HL)	ZN(LH)	!A2&!A3&!B1&B2&B3	0.0100	0.0010	0.2207	0.2521
A1(HL)	ZN(LH)	!A2&!A3&B1&!B2&!B3	0.0100	0.0010	0.2052	0.1867
A1(HL)	ZN(LH)	!A2&!A3&B1&!B2&B3	0.0100	0.0010	0.2040	0.1868
A1(HL)	ZN(LH)	!A2&!A3&B1&B2&!B3	0.0100	0.0010	0.2040	0.1867
A1(HL)	ZN(LH)	!A2&!A3&B1&B2&B3	0.0100	0.0010	0.2031	0.1867
A1(LH)	ZN(HL)	!A2&!A3&!B1&!B2&B3	0.0100	0.0010	0.1044	0.0797
A1(LH)	ZN(HL)	!A2&!A3&!B1&B2&!B3	0.0100	0.0010	0.0952	0.0677
A1(LH)	ZN(HL)	!A2&!A3&!B1&B2&B3	0.0100	0.0010	0.0811	0.0527
A1(LH)	ZN(HL)	!A2&!A3&B1&!B2&!B3	0.0100	0.0010	0.0737	0.0520
A1(LH)	ZN(HL)	!A2&!A3&B1&!B2&B3	0.0100	0.0010	0.0644	0.0407
A1(LH)	ZN(HL)	!A2&!A3&B1&B2&!B3	0.0100	0.0010	0.0644	0.0407
A1(LH)	ZN(HL)	!A2&!A3&B1&B2&B3	0.0100	0.0010	0.0612	0.0379
A2(HL)	ZN(LH)	!A1&!A3&!B1&!B2&B3	0.0100	0.0010	0.2961	0.3032
A2(HL)	ZN(LH)	!A1&!A3&!B1&B2&!B3	0.0100	0.0010	0.2959	0.2538
A2(HL)	ZN(LH)	!A1&!A3&!B1&B2&B3	0.0100	0.0010	0.2946	0.2538
A2(HL)	ZN(LH)	!A1&!A3&B1&!B2&!B3	0.0100	0.0010	0.2788	0.1885
A2(HL)	ZN(LH)	!A1&!A3&B1&!B2&B3	0.0100	0.0010	0.2776	0.1884
A2(HL)	ZN(LH)	!A1&!A3&B1&B2&!B3	0.0100	0.0010	0.2775	0.1885
A2(HL)	ZN(LH)	!A1&!A3&B1&B2&B3	0.0100	0.0010	0.2768	0.1884
A2(LH)	ZN(HL)	!A1&!A3&!B1&!B2&B3	0.0100	0.0010	0.1338	0.0985
A2(LH)	ZN(HL)	!A1&!A3&!B1&B2&!B3	0.0100	0.0010	0.1212	0.0862
A2(LH)	ZN(HL)	!A1&!A3&!B1&B2&B3	0.0100	0.0010	0.1014	0.0667
A2(LH)	ZN(HL)	!A1&!A3&B1&!B2&!B3	0.0100	0.0010	0.0973	0.0709
A2(LH)	ZN(HL)	!A1&!A3&B1&!B2&B3	0.0100	0.0010	0.0823	0.0552
A2(LH)	ZN(HL)	!A1&!A3&B1&B2&!B3	0.0100	0.0010	0.0824	0.0552
A2(LH)	ZN(HL)	!A1&!A3&B1&B2&B3	0.0100	0.0010	0.0777	0.0510
A3(HL)	ZN(LH)	!A1&!A2&!B1&!B2&B3	0.0100	0.0010	0.3195	0.3032
A3(HL)	ZN(LH)	!A1&!A2&!B1&B2&!B3	0.0100	0.0010	0.3193	0.2535
A3(HL)	ZN(LH)	!A1&!A2&!B1&B2&B3	0.0100	0.0010	0.3180	0.2536
A3(HL)	ZN(LH)	!A1&!A2&B1&!B2&!B3	0.0100	0.0010	0.3024	0.1884
A3(HL)	ZN(LH)	!A1&!A2&B1&!B2&B3	0.0100	0.0010	0.3011	0.1884
A3(HL)	ZN(LH)	!A1&!A2&B1&B2&!B3	0.0100	0.0010	0.3011	0.1884
A3(HL)	ZN(LH)	!A1&!A2&B1&B2&B3	0.0100	0.0010	0.3003	0.1883
A3(LH)	ZN(HL)	!A1&!A2&!B1&!B2&B3	0.0100	0.0010	0.1448	0.1128
A3(LH)	ZN(HL)	!A1&!A2&!B1&B2&!B3	0.0100	0.0010	0.1295	0.0994
A3(LH)	ZN(HL)	!A1&!A2&!B1&B2&B3	0.0100	0.0010	0.1061	0.0760
A3(LH)	ZN(HL)	!A1&!A2&B1&!B2&!B3	0.0100	0.0010	0.1027	0.0839
A3(LH)	ZN(HL)	!A1&!A2&B1&!B2&B3	0.0100	0.0010	0.0848	0.0637
A3(LH)	ZN(HL)	!A1&!A2&B1&B2&!B3	0.0100	0.0010	0.0848	0.0637
A3(LH)	ZN(HL)	!A1&!A2&B1&B2&B3	0.0100	0.0010	0.0794	0.0584

DYNAMIC ENERGY

Input Pin	When Condition	Tin (ns)	Output	Out Load (pf)	Energy (uW/MHz)
A1	!A2&!A3&!B1&!B2&B3	0.0100	ZN(LH)	0.0010	0.2174
A1	!A2&!A3&!B1&B2&!B3	0.0100	ZN(LH)	0.0010	0.1913
A1	!A2&!A3&!B1&B2&B3	0.0100	ZN(LH)	0.0010	0.1906
A1	!A2&!A3&B1&!B2&!B3	0.0100	ZN(LH)	0.0010	0.1648
A1	!A2&!A3&B1&!B2&B3	0.0100	ZN(LH)	0.0010	0.1641
A1	!A2&!A3&B1&B2&!B3	0.0100	ZN(LH)	0.0010	0.1641
A1	!A2&!A3&B1&B2&B3	0.0100	ZN(LH)	0.0010	0.1637
B2	!A1&!A2&A3&!B1&!B3	0.0100	ZN(LH)	0.0010	0.3665
B2	!A1&A2&!A3&!B1&!B3	0.0100	ZN(LH)	0.0010	0.3405
B2	!A1&A2&A3&!B1&!B3	0.0100	ZN(LH)	0.0010	0.3630
B2	A1&!A2&!A3&!B1&!B3	0.0100	ZN(LH)	0.0010	0.3131
B2	A1&!A2&A3&!B1&!B3	0.0100	ZN(LH)	0.0010	0.3356
B2	A1&A2&!A3&!B1&!B3	0.0100	ZN(LH)	0.0010	0.3356
B2	A1&A2&A3&!B1&!B3	0.0100	ZN(LH)	0.0010	0.3578
B1	!A1&!A2&A3&!B2&!B3	0.0100	ZN(HL)	0.0010	0.0628
B1	!A1&A2&!A3&!B2&!B3	0.0100	ZN(HL)	0.0010	0.0409
B1	!A1&A2&A3&!B2&!B3	0.0100	ZN(HL)	0.0010	0.0409
B1	A1&!A2&!A3&!B2&!B3	0.0100	ZN(HL)	0.0010	0.0077
B1	A1&!A2&A3&!B2&!B3	0.0100	ZN(HL)	0.0010	0.0076
B1	A1&A2&!A3&!B2&!B3	0.0100	ZN(HL)	0.0010	0.0076
B1	A1&A2&A3&!B2&!B3	0.0100	ZN(HL)	0.0010	0.0076
A2	!A1&!A3&!B1&!B2&B3	0.0100	ZN(LH)	0.0010	0.2448
A2	!A1&!A3&!B1&B2&!B3	0.0100	ZN(LH)	0.0010	0.2187
A2	!A1&!A3&!B1&B2&B3	0.0100	ZN(LH)	0.0010	0.2181
A2	!A1&!A3&B1&!B2&!B3	0.0100	ZN(LH)	0.0010	0.1923
A2	!A1&!A3&B1&!B2&B3	0.0100	ZN(LH)	0.0010	0.1916
A2	!A1&!A3&B1&B2&!B3	0.0100	ZN(LH)	0.0010	0.1916
A2	!A1&!A3&B1&B2&B3	0.0100	ZN(LH)	0.0010	0.1912
B1	!A1&!A2&A3&!B2&!B3	0.0100	ZN(LH)	0.0010	0.3400
B1	!A1&A2&!A3&!B2&!B3	0.0100	ZN(LH)	0.0010	0.3140
B1	!A1&A2&A3&!B2&!B3	0.0100	ZN(LH)	0.0010	0.3364
B1	A1&!A2&!A3&!B2&!B3	0.0100	ZN(LH)	0.0010	0.2867
B1	A1&!A2&A3&!B2&!B3	0.0100	ZN(LH)	0.0010	0.3091
B1	A1&A2&!A3&!B2&!B3	0.0100	ZN(LH)	0.0010	0.3091
B1	A1&A2&A3&!B2&!B3	0.0100	ZN(LH)	0.0010	0.3312
B3	!A1&!A2&A3&!B1&!B2	0.0100	ZN(LH)	0.0010	0.3926
B3	!A1&A2&!A3&!B1&!B2	0.0100	ZN(LH)	0.0010	0.3666
B3	!A1&A2&A3&!B1&!B2	0.0100	ZN(LH)	0.0010	0.3891
B3	A1&!A2&!A3&!B1&!B2	0.0100	ZN(LH)	0.0010	0.3391
B3	A1&!A2&A3&!B1&!B2	0.0100	ZN(LH)	0.0010	0.3617
B3	A1&A2&!A3&!B1&!B2	0.0100	ZN(LH)	0.0010	0.3617
B3	A1&A2&A3&!B1&!B2	0.0100	ZN(LH)	0.0010	0.3838
A2	!A1&!A3&!B1&!B2&B3	0.0100	ZN(HL)	0.0010	0.0877
A2	!A1&!A3&!B1&B2&!B3	0.0100	ZN(HL)	0.0010	0.0642
A2	!A1&!A3&!B1&B2&B3	0.0100	ZN(HL)	0.0010	0.0641
A2	!A1&!A3&B1&!B2&!B3	0.0100	ZN(HL)	0.0010	0.0401
A2	!A1&!A3&B1&!B2&B3	0.0100	ZN(HL)	0.0010	0.0401
A2	!A1&!A3&B1&B2&!B3	0.0100	ZN(HL)	0.0010	0.0401
A2	!A1&!A3&B1&B2&B3	0.0100	ZN(HL)	0.0010	0.0401
B3	!A1&!A2&A3&!B1&!B2	0.0100	ZN(HL)	0.0010	0.1069
B3	!A1&A2&!A3&!B1&!B2	0.0100	ZN(HL)	0.0010	0.0848

continues on next page

Table 107 – continued from previous page

B3	!A1&A2&A3&!B1&!B2	0.0100	ZN(HL)	0.0010	0.0849
B3	A1&!A2&!A3&!B1&!B2	0.0100	ZN(HL)	0.0010	0.0521
B3	A1&!A2&A3&!B1&!B2	0.0100	ZN(HL)	0.0010	0.0520
B3	A1&A2&!A3&!B1&!B2	0.0100	ZN(HL)	0.0010	0.0519
B3	A1&A2&A3&!B1&!B2	0.0100	ZN(HL)	0.0010	0.0520
A3	!A1&!A2&!B1&!B2&B3	0.0100	ZN(LH)	0.0010	0.2709
A3	!A1&!A2&!B1&B2&!B3	0.0100	ZN(LH)	0.0010	0.2448
A3	!A1&!A2&!B1&B2&B3	0.0100	ZN(LH)	0.0010	0.2442
A3	!A1&!A2&B1&!B2&!B3	0.0100	ZN(LH)	0.0010	0.2183
A3	!A1&!A2&B1&!B2&B3	0.0100	ZN(LH)	0.0010	0.2177
A3	!A1&!A2&B1&B2&!B3	0.0100	ZN(LH)	0.0010	0.2177
A3	!A1&!A2&B1&B2&B3	0.0100	ZN(LH)	0.0010	0.2173
A3	!A1&!A2&!B1&!B2&B3	0.0100	ZN(HL)	0.0010	0.1070
A3	!A1&!A2&!B1&B2&!B3	0.0100	ZN(HL)	0.0010	0.0834
A3	!A1&!A2&!B1&B2&B3	0.0100	ZN(HL)	0.0010	0.0834
A3	!A1&!A2&B1&!B2&!B3	0.0100	ZN(HL)	0.0010	0.0594
A3	!A1&!A2&B1&!B2&B3	0.0100	ZN(HL)	0.0010	0.0594
A3	!A1&!A2&B1&B2&!B3	0.0100	ZN(HL)	0.0010	0.0594
A3	!A1&!A2&B1&B2&B3	0.0100	ZN(HL)	0.0010	0.0594
A1	!A2&!A3&!B1&!B2&B3	0.0100	ZN(HL)	0.0010	0.0554
A1	!A2&!A3&!B1&B2&!B3	0.0100	ZN(HL)	0.0010	0.0317
A1	!A2&!A3&!B1&B2&B3	0.0100	ZN(HL)	0.0010	0.0317
A1	!A2&!A3&B1&!B2&!B3	0.0100	ZN(HL)	0.0010	0.0075
A1	!A2&!A3&B1&!B2&B3	0.0100	ZN(HL)	0.0010	0.0075
A1	!A2&!A3&B1&B2&!B3	0.0100	ZN(HL)	0.0010	0.0075
A1	!A2&!A3&B1&B2&B3	0.0100	ZN(HL)	0.0010	0.0075
B2	!A1&!A2&A3&!B1&!B3	0.0100	ZN(HL)	0.0010	0.0854
B2	!A1&A2&!A3&!B1&!B3	0.0100	ZN(HL)	0.0010	0.0635
B2	!A1&A2&A3&!B1&!B3	0.0100	ZN(HL)	0.0010	0.0635
B2	A1&!A2&!A3&!B1&!B3	0.0100	ZN(HL)	0.0010	0.0307
B2	A1&!A2&A3&!B1&!B3	0.0100	ZN(HL)	0.0010	0.0305
B2	A1&A2&!A3&!B1&!B3	0.0100	ZN(HL)	0.0010	0.0305
B2	A1&A2&A3&!B1&!B3	0.0100	ZN(HL)	0.0010	0.0306
B2(LH)	!A1&!A2&!A3&!B1&!B3	0.0100	n/a	n/a	-0.0355
B2(LH)	!A1&!A2&!A3&!B1&B3	0.0100	n/a	n/a	-0.0343
B2(LH)	!A1&!A2&!A3&B1&!B3	0.0100	n/a	n/a	-0.0342
B2(LH)	!A1&!A2&!A3&B1&B3	0.0100	n/a	n/a	-0.0329
B2(LH)	!A1&!A2&A3&!B1&B3	0.0100	n/a	n/a	-0.0107
B2(LH)	!A1&!A2&A3&B1&!B3	0.0100	n/a	n/a	-0.0293
B2(LH)	!A1&!A2&A3&B1&B3	0.0100	n/a	n/a	-0.0259
B2(LH)	!A1&A2&!A3&!B1&B3	0.0100	n/a	n/a	-0.0108
B2(LH)	!A1&A2&!A3&B1&!B3	0.0100	n/a	n/a	-0.0293
B2(LH)	!A1&A2&!A3&B1&B3	0.0100	n/a	n/a	-0.0259
B2(LH)	!A1&A2&A3&!B1&B3	0.0100	n/a	n/a	-0.0107
B2(LH)	!A1&A2&A3&B1&!B3	0.0100	n/a	n/a	-0.0293
B2(LH)	!A1&A2&A3&B1&B3	0.0100	n/a	n/a	-0.0259
B2(LH)	A1&!A2&!A3&!B1&B3	0.0100	n/a	n/a	-0.0108
B2(LH)	A1&!A2&!A3&B1&!B3	0.0100	n/a	n/a	-0.0293
B2(LH)	A1&!A2&!A3&B1&B3	0.0100	n/a	n/a	-0.0259
B2(LH)	A1&!A2&A3&!B1&B3	0.0100	n/a	n/a	-0.0107
B2(LH)	A1&!A2&A3&B1&!B3	0.0100	n/a	n/a	-0.0293
B2(LH)	A1&!A2&A3&B1&B3	0.0100	n/a	n/a	-0.0259

continues on next page

Table 107 – continued from previous page

B2(LH)	A1&A2&!A3&!B1&B3	0.0100	n/a	n/a	-0.0107
B2(LH)	A1&A2&!A3&B1&!B3	0.0100	n/a	n/a	-0.0293
B2(LH)	A1&A2&!A3&B1&B3	0.0100	n/a	n/a	-0.0259
B2(LH)	A1&A2&A3&!B1&B3	0.0100	n/a	n/a	-0.0108
B2(LH)	A1&A2&A3&B1&!B3	0.0100	n/a	n/a	-0.0293
B2(LH)	A1&A2&A3&B1&B3	0.0100	n/a	n/a	-0.0259
A3(LH)	!A1&!A2&!B1&!B2&!B3	0.0100	n/a	n/a	0.0576
A3(LH)	!A1&A2&!B1&!B2&!B3	0.0100	n/a	n/a	-0.0386
A3(LH)	A1&!A2&!B1&!B2&!B3	0.0100	n/a	n/a	-0.0353
A3(LH)	A1&A2&!B1&!B2&!B3	0.0100	n/a	n/a	-0.0380
A3(LH)	!A1&A2&!B1&!B2&B3	0.0100	n/a	n/a	-0.0310
A3(LH)	!A1&A2&!B1&B2&!B3	0.0100	n/a	n/a	-0.0310
A3(LH)	!A1&A2&!B1&B2&B3	0.0100	n/a	n/a	-0.0310
A3(LH)	!A1&A2&B1&!B2&!B3	0.0100	n/a	n/a	-0.0310
A3(LH)	!A1&A2&B1&!B2&B3	0.0100	n/a	n/a	-0.0310
A3(LH)	!A1&A2&B1&B2&!B3	0.0100	n/a	n/a	-0.0310
A3(LH)	!A1&A2&B1&B2&B3	0.0100	n/a	n/a	-0.0310
A3(LH)	A1&!A2&!B1&!B2&B3	0.0100	n/a	n/a	-0.0302
A3(LH)	A1&!A2&!B1&B2&!B3	0.0100	n/a	n/a	-0.0302
A3(LH)	A1&!A2&!B1&B2&B3	0.0100	n/a	n/a	-0.0302
A3(LH)	A1&!A2&B1&!B2&!B3	0.0100	n/a	n/a	-0.0302
A3(LH)	A1&!A2&B1&!B2&B3	0.0100	n/a	n/a	-0.0302
A3(LH)	A1&!A2&B1&B2&!B3	0.0100	n/a	n/a	-0.0302
A3(LH)	A1&!A2&B1&B2&B3	0.0100	n/a	n/a	-0.0302
A3(LH)	A1&A2&!B1&!B2&B3	0.0100	n/a	n/a	-0.0335
A3(LH)	A1&A2&!B1&B2&!B3	0.0100	n/a	n/a	-0.0335
A3(LH)	A1&A2&!B1&B2&B3	0.0100	n/a	n/a	-0.0335
A3(LH)	A1&A2&B1&!B2&!B3	0.0100	n/a	n/a	-0.0335
A3(LH)	A1&A2&B1&!B2&B3	0.0100	n/a	n/a	-0.0335
A3(LH)	A1&A2&B1&B2&!B3	0.0100	n/a	n/a	-0.0335
A3(LH)	A1&A2&B1&B2&B3	0.0100	n/a	n/a	-0.0335
A3(HL)	!A1&!A2&!B1&!B2&!B3	0.0100	n/a	n/a	0.0399
A3(HL)	!A1&A2&!B1&!B2&!B3	0.0100	n/a	n/a	0.0402
A3(HL)	A1&!A2&!B1&!B2&!B3	0.0100	n/a	n/a	0.0401
A3(HL)	A1&A2&!B1&!B2&!B3	0.0100	n/a	n/a	0.0402
A3(HL)	!A1&A2&!B1&!B2&B3	0.0100	n/a	n/a	0.0352
A3(HL)	!A1&A2&!B1&B2&!B3	0.0100	n/a	n/a	0.0352
A3(HL)	!A1&A2&!B1&B2&B3	0.0100	n/a	n/a	0.0352
A3(HL)	!A1&A2&B1&!B2&!B3	0.0100	n/a	n/a	0.0352
A3(HL)	!A1&A2&B1&!B2&B3	0.0100	n/a	n/a	0.0352
A3(HL)	!A1&A2&B1&B2&!B3	0.0100	n/a	n/a	0.0352
A3(HL)	!A1&A2&B1&B2&B3	0.0100	n/a	n/a	0.0352
A3(HL)	A1&!A2&!B1&!B2&B3	0.0100	n/a	n/a	0.0352
A3(HL)	A1&!A2&!B1&B2&!B3	0.0100	n/a	n/a	0.0352
A3(HL)	A1&!A2&!B1&B2&B3	0.0100	n/a	n/a	0.0352
A3(HL)	A1&!A2&B1&!B2&!B3	0.0100	n/a	n/a	0.0352
A3(HL)	A1&!A2&B1&!B2&B3	0.0100	n/a	n/a	0.0352
A3(HL)	A1&!A2&B1&B2&!B3	0.0100	n/a	n/a	0.0352
A3(HL)	A1&!A2&B1&B2&B3	0.0100	n/a	n/a	0.0352
A3(HL)	A1&A2&!B1&!B2&B3	0.0100	n/a	n/a	0.0352
A3(HL)	A1&A2&!B1&B2&!B3	0.0100	n/a	n/a	0.0352
A3(HL)	A1&A2&!B1&B2&B3	0.0100	n/a	n/a	0.0352

continues on next page

Table 107 – continued from previous page

A3(HL)	A1&A2&B1&!B2&!B3	0.0100	n/a	n/a	0.0352
A3(HL)	A1&A2&B1&!B2&B3	0.0100	n/a	n/a	0.0352
A3(HL)	A1&A2&B1&B2&!B3	0.0100	n/a	n/a	0.0352
A3(HL)	A1&A2&B1&B2&B3	0.0100	n/a	n/a	0.0352
B2(HL)	!A1&!A2&!A3&!B1&!B3	0.0100	n/a	n/a	0.0381
B2(HL)	!A1&!A2&!A3&!B1&B3	0.0100	n/a	n/a	0.0355
B2(HL)	!A1&!A2&!A3&B1&!B3	0.0100	n/a	n/a	0.0352
B2(HL)	!A1&!A2&!A3&B1&B3	0.0100	n/a	n/a	0.0215
B2(HL)	!A1&!A2&A3&!B1&B3	0.0100	n/a	n/a	0.0243
B2(HL)	!A1&!A2&A3&B1&!B3	0.0100	n/a	n/a	0.0353
B2(HL)	!A1&!A2&A3&B1&B3	0.0100	n/a	n/a	0.0215
B2(HL)	!A1&A2&!A3&!B1&B3	0.0100	n/a	n/a	0.0243
B2(HL)	!A1&A2&!A3&B1&!B3	0.0100	n/a	n/a	0.0353
B2(HL)	!A1&A2&!A3&B1&B3	0.0100	n/a	n/a	0.0215
B2(HL)	!A1&A2&A3&!B1&B3	0.0100	n/a	n/a	0.0243
B2(HL)	!A1&A2&A3&B1&!B3	0.0100	n/a	n/a	0.0353
B2(HL)	!A1&A2&A3&B1&B3	0.0100	n/a	n/a	0.0215
B2(HL)	A1&!A2&!A3&!B1&B3	0.0100	n/a	n/a	0.0243
B2(HL)	A1&!A2&!A3&B1&!B3	0.0100	n/a	n/a	0.0352
B2(HL)	A1&!A2&!A3&B1&B3	0.0100	n/a	n/a	0.0215
B2(HL)	A1&!A2&A3&!B1&B3	0.0100	n/a	n/a	0.0243
B2(HL)	A1&!A2&A3&B1&!B3	0.0100	n/a	n/a	0.0353
B2(HL)	A1&!A2&A3&B1&B3	0.0100	n/a	n/a	0.0215
B2(HL)	A1&A2&!A3&!B1&B3	0.0100	n/a	n/a	0.0243
B2(HL)	A1&A2&!A3&B1&!B3	0.0100	n/a	n/a	0.0353
B2(HL)	A1&A2&!A3&B1&B3	0.0100	n/a	n/a	0.0215
B2(HL)	A1&A2&A3&!B1&B3	0.0100	n/a	n/a	0.0243
B2(HL)	A1&A2&A3&B1&!B3	0.0100	n/a	n/a	0.0353
B2(HL)	A1&A2&A3&B1&B3	0.0100	n/a	n/a	0.0215
B3(LH)	!A1&!A2&!A3&!B1&!B2	0.0100	n/a	n/a	-0.0353
B3(LH)	!A1&!A2&!A3&!B1&B2	0.0100	n/a	n/a	-0.0341
B3(LH)	!A1&!A2&!A3&B1&!B2	0.0100	n/a	n/a	-0.0304
B3(LH)	!A1&!A2&!A3&B1&B2	0.0100	n/a	n/a	-0.0333
B3(LH)	!A1&!A2&A3&!B1&B2	0.0100	n/a	n/a	-0.0305
B3(LH)	!A1&!A2&A3&B1&!B2	0.0100	n/a	n/a	-0.0294
B3(LH)	!A1&!A2&A3&B1&B2	0.0100	n/a	n/a	-0.0333
B3(LH)	!A1&A2&!A3&!B1&B2	0.0100	n/a	n/a	-0.0306
B3(LH)	!A1&A2&!A3&B1&!B2	0.0100	n/a	n/a	-0.0294
B3(LH)	!A1&A2&!A3&B1&B2	0.0100	n/a	n/a	-0.0333
B3(LH)	!A1&A2&A3&!B1&B2	0.0100	n/a	n/a	-0.0305
B3(LH)	!A1&A2&A3&B1&!B2	0.0100	n/a	n/a	-0.0294
B3(LH)	!A1&A2&A3&B1&B2	0.0100	n/a	n/a	-0.0333
B3(LH)	A1&!A2&!A3&!B1&B2	0.0100	n/a	n/a	-0.0306
B3(LH)	A1&!A2&!A3&B1&!B2	0.0100	n/a	n/a	-0.0294
B3(LH)	A1&!A2&!A3&B1&B2	0.0100	n/a	n/a	-0.0333
B3(LH)	A1&!A2&A3&!B1&B2	0.0100	n/a	n/a	-0.0305
B3(LH)	A1&!A2&A3&B1&!B2	0.0100	n/a	n/a	-0.0294
B3(LH)	A1&!A2&A3&B1&B2	0.0100	n/a	n/a	-0.0333
B3(LH)	A1&A2&!A3&!B1&B2	0.0100	n/a	n/a	-0.0305
B3(LH)	A1&A2&!A3&B1&!B2	0.0100	n/a	n/a	-0.0294
B3(LH)	A1&A2&!A3&B1&B2	0.0100	n/a	n/a	-0.0333
B3(LH)	A1&A2&A3&!B1&B2	0.0100	n/a	n/a	-0.0306

continues on next page

Table 107 – continued from previous page

B3(LH)	A1&A2&A3&B1&!B2	0.0100	n/a	n/a	-0.0294
B3(LH)	A1&A2&A3&B1&B2	0.0100	n/a	n/a	-0.0333
B3(HL)	!A1&!A2&!A3&!B1&!B2	0.0100	n/a	n/a	0.0380
B3(HL)	!A1&!A2&!A3&!B1&B2	0.0100	n/a	n/a	0.0352
B3(HL)	!A1&!A2&!A3&B1&!B2	0.0100	n/a	n/a	0.0352
B3(HL)	!A1&!A2&!A3&B1&B2	0.0100	n/a	n/a	0.0352
B3(HL)	!A1&!A2&A3&!B1&B2	0.0100	n/a	n/a	0.0352
B3(HL)	!A1&!A2&A3&B1&!B2	0.0100	n/a	n/a	0.0352
B3(HL)	!A1&!A2&A3&B1&B2	0.0100	n/a	n/a	0.0352
B3(HL)	!A1&A2&!A3&!B1&B2	0.0100	n/a	n/a	0.0352
B3(HL)	!A1&A2&!A3&B1&!B2	0.0100	n/a	n/a	0.0352
B3(HL)	!A1&A2&!A3&B1&B2	0.0100	n/a	n/a	0.0352
B3(HL)	!A1&A2&A3&!B1&B2	0.0100	n/a	n/a	0.0352
B3(HL)	!A1&A2&A3&B1&!B2	0.0100	n/a	n/a	0.0352
B3(HL)	!A1&A2&A3&B1&B2	0.0100	n/a	n/a	0.0352
B3(HL)	A1&!A2&!A3&!B1&B2	0.0100	n/a	n/a	0.0352
B3(HL)	A1&!A2&!A3&B1&!B2	0.0100	n/a	n/a	0.0352
B3(HL)	A1&!A2&!A3&B1&B2	0.0100	n/a	n/a	0.0352
B3(HL)	A1&!A2&A3&!B1&B2	0.0100	n/a	n/a	0.0352
B3(HL)	A1&!A2&A3&B1&!B2	0.0100	n/a	n/a	0.0352
B3(HL)	A1&!A2&A3&B1&B2	0.0100	n/a	n/a	0.0352
B3(HL)	A1&A2&!A3&!B1&B2	0.0100	n/a	n/a	0.0352
B3(HL)	A1&A2&!A3&B1&!B2	0.0100	n/a	n/a	0.0352
B3(HL)	A1&A2&!A3&B1&B2	0.0100	n/a	n/a	0.0352
B3(HL)	A1&A2&A3&!B1&B2	0.0100	n/a	n/a	0.0352
B3(HL)	A1&A2&A3&B1&!B2	0.0100	n/a	n/a	0.0352
B3(HL)	A1&A2&A3&B1&B2	0.0100	n/a	n/a	0.0352
A2(LH)	!A1&!A3&!B1&!B2&!B3	0.0100	n/a	n/a	0.0576
A2(LH)	!A1&A3&!B1&!B2&!B3	0.0100	n/a	n/a	-0.0387
A2(LH)	A1&!A3&!B1&!B2&!B3	0.0100	n/a	n/a	-0.0386
A2(LH)	A1&A3&!B1&!B2&!B3	0.0100	n/a	n/a	-0.0373
A2(LH)	!A1&A3&!B1&!B2&B3	0.0100	n/a	n/a	-0.0111
A2(LH)	!A1&A3&!B1&B2&!B3	0.0100	n/a	n/a	-0.0111
A2(LH)	!A1&A3&!B1&B2&B3	0.0100	n/a	n/a	-0.0111
A2(LH)	!A1&A3&B1&!B2&!B3	0.0100	n/a	n/a	-0.0111
A2(LH)	!A1&A3&B1&!B2&B3	0.0100	n/a	n/a	-0.0111
A2(LH)	!A1&A3&B1&B2&!B3	0.0100	n/a	n/a	-0.0111
A2(LH)	!A1&A3&B1&B2&B3	0.0100	n/a	n/a	-0.0111
A2(LH)	A1&!A3&!B1&!B2&B3	0.0100	n/a	n/a	-0.0288
A2(LH)	A1&!A3&!B1&B2&!B3	0.0100	n/a	n/a	-0.0288
A2(LH)	A1&!A3&!B1&B2&B3	0.0100	n/a	n/a	-0.0288
A2(LH)	A1&!A3&B1&!B2&!B3	0.0100	n/a	n/a	-0.0288
A2(LH)	A1&!A3&B1&!B2&B3	0.0100	n/a	n/a	-0.0288
A2(LH)	A1&!A3&B1&B2&!B3	0.0100	n/a	n/a	-0.0288
A2(LH)	A1&!A3&B1&B2&B3	0.0100	n/a	n/a	-0.0287
A2(LH)	A1&A3&!B1&!B2&B3	0.0100	n/a	n/a	-0.0255
A2(LH)	A1&A3&!B1&B2&!B3	0.0100	n/a	n/a	-0.0255
A2(LH)	A1&A3&!B1&B2&B3	0.0100	n/a	n/a	-0.0255
A2(LH)	A1&A3&B1&!B2&!B3	0.0100	n/a	n/a	-0.0255
A2(LH)	A1&A3&B1&!B2&B3	0.0100	n/a	n/a	-0.0255
A2(LH)	A1&A3&B1&B2&!B3	0.0100	n/a	n/a	-0.0255
A2(LH)	A1&A3&B1&B2&B3	0.0100	n/a	n/a	-0.0255

continues on next page

Table 107 – continued from previous page

A1(LH)	!A2&!A3&!B1&!B2&!B3	0.0100	n/a	n/a	0.0575
A1(LH)	!A2&A3&!B1&!B2&!B3	0.0100	n/a	n/a	-0.0356
A1(LH)	A2&!A3&!B1&!B2&!B3	0.0100	n/a	n/a	-0.0389
A1(LH)	A2&A3&!B1&!B2&!B3	0.0100	n/a	n/a	-0.0380
A1(LH)	!A2&A3&!B1&!B2&B3	0.0100	n/a	n/a	-0.0100
A1(LH)	!A2&A3&!B1&B2&!B3	0.0100	n/a	n/a	-0.0100
A1(LH)	!A2&A3&!B1&B2&B3	0.0100	n/a	n/a	-0.0100
A1(LH)	!A2&A3&B1&!B2&!B3	0.0100	n/a	n/a	-0.0100
A1(LH)	!A2&A3&B1&!B2&B3	0.0100	n/a	n/a	-0.0100
A1(LH)	!A2&A3&B1&B2&!B3	0.0100	n/a	n/a	-0.0100
A1(LH)	!A2&A3&B1&B2&B3	0.0100	n/a	n/a	-0.0100
A1(LH)	A2&!A3&!B1&!B2&B3	0.0100	n/a	n/a	-0.0103
A1(LH)	A2&!A3&!B1&B2&!B3	0.0100	n/a	n/a	-0.0103
A1(LH)	A2&!A3&!B1&B2&B3	0.0100	n/a	n/a	-0.0103
A1(LH)	A2&!A3&B1&!B2&!B3	0.0100	n/a	n/a	-0.0103
A1(LH)	A2&!A3&B1&!B2&B3	0.0100	n/a	n/a	-0.0103
A1(LH)	A2&!A3&B1&B2&!B3	0.0100	n/a	n/a	-0.0103
A1(LH)	A2&!A3&B1&B2&B3	0.0100	n/a	n/a	-0.0103
A1(LH)	A2&A3&!B1&!B2&B3	0.0100	n/a	n/a	-0.0103
A1(LH)	A2&A3&!B1&B2&!B3	0.0100	n/a	n/a	-0.0103
A1(LH)	A2&A3&!B1&B2&B3	0.0100	n/a	n/a	-0.0103
A1(LH)	A2&A3&B1&!B2&!B3	0.0100	n/a	n/a	-0.0103
A1(LH)	A2&A3&B1&!B2&B3	0.0100	n/a	n/a	-0.0103
A1(LH)	A2&A3&B1&B2&!B3	0.0100	n/a	n/a	-0.0103
A1(LH)	A2&A3&B1&B2&B3	0.0100	n/a	n/a	-0.0103
A2(HL)	!A1&!A3&!B1&!B2&!B3	0.0100	n/a	n/a	0.0400
A2(HL)	!A1&A3&!B1&!B2&!B3	0.0100	n/a	n/a	0.0402
A2(HL)	A1&!A3&!B1&!B2&!B3	0.0100	n/a	n/a	0.0401
A2(HL)	A1&A3&!B1&!B2&!B3	0.0100	n/a	n/a	0.0276
A2(HL)	!A1&A3&!B1&!B2&B3	0.0100	n/a	n/a	0.0221
A2(HL)	!A1&A3&!B1&B2&!B3	0.0100	n/a	n/a	0.0221
A2(HL)	!A1&A3&!B1&B2&B3	0.0100	n/a	n/a	0.0221
A2(HL)	!A1&A3&B1&!B2&!B3	0.0100	n/a	n/a	0.0221
A2(HL)	!A1&A3&B1&!B2&B3	0.0100	n/a	n/a	0.0221
A2(HL)	!A1&A3&B1&B2&!B3	0.0100	n/a	n/a	0.0221
A2(HL)	!A1&A3&B1&B2&B3	0.0100	n/a	n/a	0.0221
A2(HL)	A1&!A3&!B1&!B2&B3	0.0100	n/a	n/a	0.0353
A2(HL)	A1&!A3&!B1&B2&!B3	0.0100	n/a	n/a	0.0353
A2(HL)	A1&!A3&!B1&B2&B3	0.0100	n/a	n/a	0.0352
A2(HL)	A1&!A3&B1&!B2&!B3	0.0100	n/a	n/a	0.0353
A2(HL)	A1&!A3&B1&!B2&B3	0.0100	n/a	n/a	0.0352
A2(HL)	A1&!A3&B1&B2&!B3	0.0100	n/a	n/a	0.0352
A2(HL)	A1&!A3&B1&B2&B3	0.0100	n/a	n/a	0.0352
A2(HL)	A1&A3&!B1&!B2&B3	0.0100	n/a	n/a	0.0227
A2(HL)	A1&A3&!B1&B2&!B3	0.0100	n/a	n/a	0.0227
A2(HL)	A1&A3&!B1&B2&B3	0.0100	n/a	n/a	0.0227
A2(HL)	A1&A3&B1&!B2&!B3	0.0100	n/a	n/a	0.0227
A2(HL)	A1&A3&B1&!B2&B3	0.0100	n/a	n/a	0.0227
A2(HL)	A1&A3&B1&B2&!B3	0.0100	n/a	n/a	0.0227
A2(HL)	A1&A3&B1&B2&B3	0.0100	n/a	n/a	0.0227
B1(HL)	!A1&!A2&!A3&!B2&!B3	0.0100	n/a	n/a	0.0382
B1(HL)	!A1&!A2&!A3&!B2&B3	0.0100	n/a	n/a	0.0356

continues on next page

Table 107 – continued from previous page

B1(HL)	!A1&!A2&!A3&B2&!B3	0.0100	n/a	n/a	0.0356
B1(HL)	!A1&!A2&!A3&B2&B3	0.0100	n/a	n/a	0.0356
B1(HL)	!A1&!A2&A3&!B2&B3	0.0100	n/a	n/a	0.0494
B1(HL)	!A1&!A2&A3&B2&!B3	0.0100	n/a	n/a	0.0256
B1(HL)	!A1&!A2&A3&B2&B3	0.0100	n/a	n/a	0.0256
B1(HL)	!A1&A2&!A3&!B2&B3	0.0100	n/a	n/a	0.0494
B1(HL)	!A1&A2&!A3&B2&!B3	0.0100	n/a	n/a	0.0256
B1(HL)	!A1&A2&!A3&B2&B3	0.0100	n/a	n/a	0.0256
B1(HL)	!A1&A2&A3&!B2&B3	0.0100	n/a	n/a	0.0494
B1(HL)	!A1&A2&A3&B2&!B3	0.0100	n/a	n/a	0.0256
B1(HL)	!A1&A2&A3&B2&B3	0.0100	n/a	n/a	0.0256
B1(HL)	A1&!A2&!A3&!B2&B3	0.0100	n/a	n/a	0.0494
B1(HL)	A1&!A2&!A3&B2&!B3	0.0100	n/a	n/a	0.0256
B1(HL)	A1&!A2&!A3&B2&B3	0.0100	n/a	n/a	0.0256
B1(HL)	A1&!A2&A3&!B2&B3	0.0100	n/a	n/a	0.0494
B1(HL)	A1&!A2&A3&B2&!B3	0.0100	n/a	n/a	0.0256
B1(HL)	A1&!A2&A3&B2&B3	0.0100	n/a	n/a	0.0256
B1(HL)	A1&A2&!A3&!B2&B3	0.0100	n/a	n/a	0.0494
B1(HL)	A1&A2&!A3&B2&!B3	0.0100	n/a	n/a	0.0256
B1(HL)	A1&A2&!A3&B2&B3	0.0100	n/a	n/a	0.0256
B1(HL)	A1&A2&A3&!B2&B3	0.0100	n/a	n/a	0.0494
B1(HL)	A1&A2&A3&B2&!B3	0.0100	n/a	n/a	0.0256
B1(HL)	A1&A2&A3&B2&B3	0.0100	n/a	n/a	0.0256
A1(HL)	!A2&!A3&!B1&!B2&!B3	0.0100	n/a	n/a	0.0401
A1(HL)	!A2&A3&!B1&!B2&!B3	0.0100	n/a	n/a	0.0403
A1(HL)	A2&!A3&!B1&!B2&!B3	0.0100	n/a	n/a	0.0403
A1(HL)	A2&A3&!B1&!B2&!B3	0.0100	n/a	n/a	0.0404
A1(HL)	!A2&A3&!B1&!B2&B3	0.0100	n/a	n/a	0.0567
A1(HL)	!A2&A3&!B1&B2&!B3	0.0100	n/a	n/a	0.0567
A1(HL)	!A2&A3&!B1&B2&B3	0.0100	n/a	n/a	0.0567
A1(HL)	!A2&A3&B1&!B2&!B3	0.0100	n/a	n/a	0.0567
A1(HL)	!A2&A3&B1&!B2&B3	0.0100	n/a	n/a	0.0567
A1(HL)	!A2&A3&B1&B2&!B3	0.0100	n/a	n/a	0.0567
A1(HL)	!A2&A3&B1&B2&B3	0.0100	n/a	n/a	0.0568
A1(HL)	A2&!A3&!B1&!B2&B3	0.0100	n/a	n/a	0.0347
A1(HL)	A2&!A3&!B1&B2&!B3	0.0100	n/a	n/a	0.0347
A1(HL)	A2&!A3&!B1&B2&B3	0.0100	n/a	n/a	0.0347
A1(HL)	A2&!A3&B1&!B2&!B3	0.0100	n/a	n/a	0.0347
A1(HL)	A2&!A3&B1&!B2&B3	0.0100	n/a	n/a	0.0347
A1(HL)	A2&!A3&B1&B2&!B3	0.0100	n/a	n/a	0.0347
A1(HL)	A2&!A3&B1&B2&B3	0.0100	n/a	n/a	0.0347
A1(HL)	A2&A3&!B1&!B2&B3	0.0100	n/a	n/a	0.0347
A1(HL)	A2&A3&!B1&B2&!B3	0.0100	n/a	n/a	0.0347
A1(HL)	A2&A3&!B1&B2&B3	0.0100	n/a	n/a	0.0347
A1(HL)	A2&A3&B1&!B2&!B3	0.0100	n/a	n/a	0.0347
A1(HL)	A2&A3&B1&!B2&B3	0.0100	n/a	n/a	0.0347
A1(HL)	A2&A3&B1&B2&!B3	0.0100	n/a	n/a	0.0347
A1(HL)	A2&A3&B1&B2&B3	0.0100	n/a	n/a	0.0347
B1(LH)	!A1&!A2&!A3&!B2&!B3	0.0100	n/a	n/a	-0.0356
B1(LH)	!A1&!A2&!A3&!B2&B3	0.0100	n/a	n/a	-0.0311
B1(LH)	!A1&!A2&!A3&B2&!B3	0.0100	n/a	n/a	-0.0345
B1(LH)	!A1&!A2&!A3&B2&B3	0.0100	n/a	n/a	-0.0337

continues on next page

Table 107 – continued from previous page

B1(LH)	!A1&!A2&A3&!B2&B3	0.0100	n/a	n/a	-0.0099
B1(LH)	!A1&!A2&A3&B2&!B3	0.0100	n/a	n/a	-0.0101
B1(LH)	!A1&!A2&A3&B2&B3	0.0100	n/a	n/a	-0.0101
B1(LH)	!A1&A2&!A3&!B2&B3	0.0100	n/a	n/a	-0.0098
B1(LH)	!A1&A2&!A3&B2&!B3	0.0100	n/a	n/a	-0.0101
B1(LH)	!A1&A2&!A3&B2&B3	0.0100	n/a	n/a	-0.0101
B1(LH)	!A1&A2&A3&!B2&B3	0.0100	n/a	n/a	-0.0098
B1(LH)	!A1&A2&A3&B2&!B3	0.0100	n/a	n/a	-0.0101
B1(LH)	!A1&A2&A3&B2&B3	0.0100	n/a	n/a	-0.0101
B1(LH)	A1&!A2&!A3&!B2&B3	0.0100	n/a	n/a	-0.0098
B1(LH)	A1&!A2&!A3&B2&!B3	0.0100	n/a	n/a	-0.0101
B1(LH)	A1&!A2&!A3&B2&B3	0.0100	n/a	n/a	-0.0101
B1(LH)	A1&!A2&A3&!B2&B3	0.0100	n/a	n/a	-0.0099
B1(LH)	A1&!A2&A3&B2&!B3	0.0100	n/a	n/a	-0.0101
B1(LH)	A1&!A2&A3&B2&B3	0.0100	n/a	n/a	-0.0101
B1(LH)	A1&A2&!A3&!B2&B3	0.0100	n/a	n/a	-0.0099
B1(LH)	A1&A2&!A3&B2&!B3	0.0100	n/a	n/a	-0.0101
B1(LH)	A1&A2&!A3&B2&B3	0.0100	n/a	n/a	-0.0101
B1(LH)	A1&A2&A3&!B2&B3	0.0100	n/a	n/a	-0.0098
B1(LH)	A1&A2&A3&B2&!B3	0.0100	n/a	n/a	-0.0101
B1(LH)	A1&A2&A3&B2&B3	0.0100	n/a	n/a	-0.0101

LEAKAGE POWER

When Condition	Power (nW)
!A1&!A2&!A3&!B1&!B2&!B3	0.1257
!A1&!A2&!A3&!B1&!B2&B3	0.1263
!A1&!A2&!A3&!B1&B2&!B3	0.1263
!A1&!A2&!A3&!B1&B2&B3	0.1263
!A1&!A2&!A3&B1&!B2&!B3	0.1263
!A1&!A2&!A3&B1&!B2&B3	0.1263
!A1&!A2&!A3&B1&B2&!B3	0.1263
!A1&!A2&!A3&B1&B2&B3	0.1263
!A1&!A2&A3&!B1&!B2&!B3	0.2451
!A1&A2&!A3&!B1&!B2&!B3	0.2451
!A1&A2&A3&!B1&!B2&!B3	0.2457
A1&!A2&!A3&!B1&!B2&!B3	0.2451
A1&!A2&A3&!B1&!B2&!B3	0.2457
A1&A2&!A3&!B1&!B2&!B3	0.2457
A1&A2&A3&!B1&!B2&!B3	0.2460
!A1&!A2&A3&!B1&!B2&B3	0.2449
!A1&!A2&A3&!B1&B2&!B3	0.2096
!A1&!A2&A3&!B1&B2&B3	0.2096
!A1&!A2&A3&B1&!B2&!B3	0.1739
!A1&!A2&A3&B1&!B2&B3	0.1739
!A1&!A2&A3&B1&B2&!B3	0.1739
!A1&!A2&A3&B1&B2&B3	0.1739

continues on next page

Table 108 – continued from previous page

!A1&A2&!A3&!B1&!B2&B3	0.2096
!A1&A2&!A3&!B1&B2&!B3	0.1742
!A1&A2&!A3&!B1&B2&B3	0.1742
!A1&A2&!A3&B1&!B2&!B3	0.1385
!A1&A2&!A3&B1&!B2&B3	0.1385
!A1&A2&!A3&B1&B2&!B3	0.1385
!A1&A2&!A3&B1&B2&B3	0.1385
!A1&A2&A3&!B1&!B2&B3	0.2096
!A1&A2&A3&!B1&B2&!B3	0.1742
!A1&A2&A3&!B1&B2&B3	0.1742
!A1&A2&A3&B1&!B2&!B3	0.1385
!A1&A2&A3&B1&!B2&B3	0.1385
!A1&A2&A3&B1&B2&!B3	0.1385
!A1&A2&A3&B1&B2&B3	0.1385
A1&!A2&!A3&!B1&!B2&B3	0.1739
A1&!A2&!A3&!B1&B2&!B3	0.1385
A1&!A2&!A3&!B1&B2&B3	0.1385
A1&!A2&!A3&B1&!B2&!B3	0.1028
A1&!A2&!A3&B1&!B2&B3	0.1028
A1&!A2&!A3&B1&B2&!B3	0.1028
A1&!A2&!A3&B1&B2&B3	0.1028
A1&!A2&A3&!B1&!B2&B3	0.1739
A1&!A2&A3&!B1&B2&!B3	0.1385
A1&!A2&A3&!B1&B2&B3	0.1385
A1&!A2&A3&B1&!B2&!B3	0.1028
A1&!A2&A3&B1&!B2&B3	0.1028
A1&!A2&A3&B1&B2&!B3	0.1028
A1&!A2&A3&B1&B2&B3	0.1028
A1&A2&!A3&!B1&!B2&B3	0.1739
A1&A2&!A3&!B1&B2&!B3	0.1385
A1&A2&!A3&!B1&B2&B3	0.1385
A1&A2&!A3&B1&!B2&!B3	0.1028
A1&A2&!A3&B1&!B2&B3	0.1028
A1&A2&!A3&B1&B2&!B3	0.1028
A1&A2&!A3&B1&B2&B3	0.1028
A1&A2&A3&!B1&!B2&B3	0.1739
A1&A2&A3&!B1&B2&!B3	0.1385
A1&A2&A3&!B1&B2&B3	0.1385
A1&A2&A3&B1&!B2&!B3	0.1028
A1&A2&A3&B1&!B2&B3	0.1028
A1&A2&A3&B1&B2&!B3	0.1028
A1&A2&A3&B1&B2&B3	0.1028

gf180mcu_fd_sc_mcu7t5v0__oai33_2

gf180mcu_fd_sc_mcu7t5v0__oai33_2 symbol

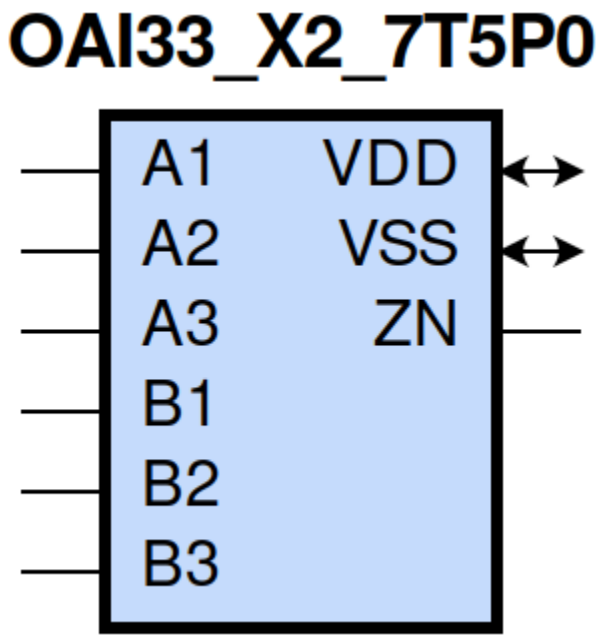

gf180mcu_fd_sc_mcu7t5v0__oai33_2 schematic

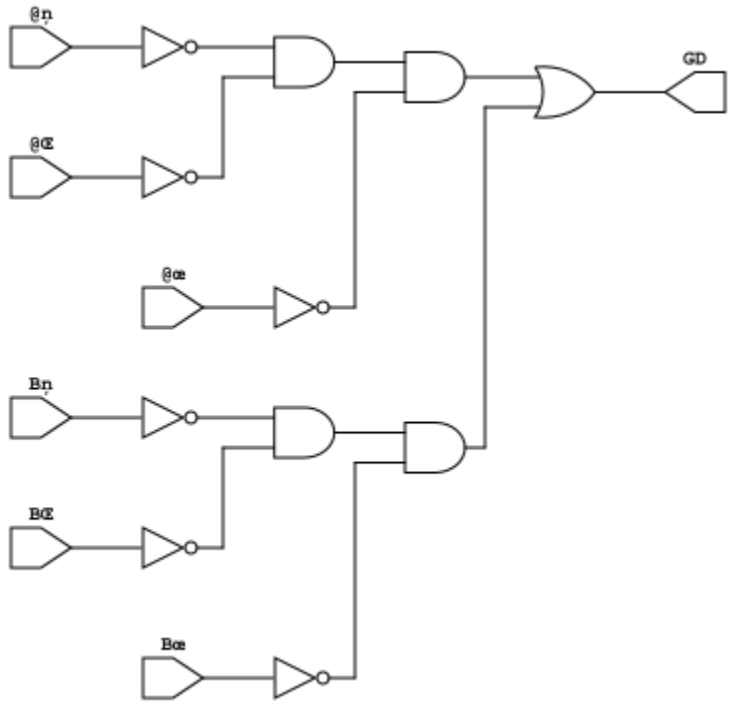

gf180mcu_fd_sc_mcu7t5v0__oai33_2 layout

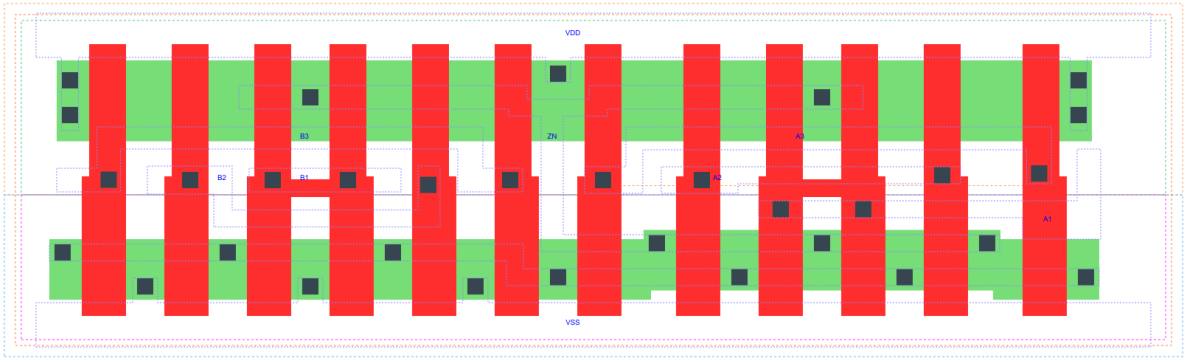

OAI33_X2 is a two 3-input OR into 2-input NAND, NAND[OR(A1,A2,A3),OR(B1,B2,B3], 2X drive strength

Attributes

Attribute	Value
area	59.270400 μm^2

OUTPUT FUNCTIONS

Output Pin	Function
ZN	(((!A1)&(!A2)&(!A3))|((!B1)&(!B2)&(!B3)))

TRUTH TABLE FOR ZN

A1	A2	A3	B1	B2	B3	ZN
0	0	0	?	?	?	1
?	?	?	0	0	0	1
1	?	?	1	?	?	0
1	?	?	?	1	?	0
1	?	?	?	?	1	0
?	1	?	1	?	?	0
?	1	?	?	1	?	0
?	1	?	?	?	1	0
?	?	1	1	?	?	0
?	?	1	?	1	?	0
?	?	1	?	?	1	0

FUNCTIONAL SCHEMATIC

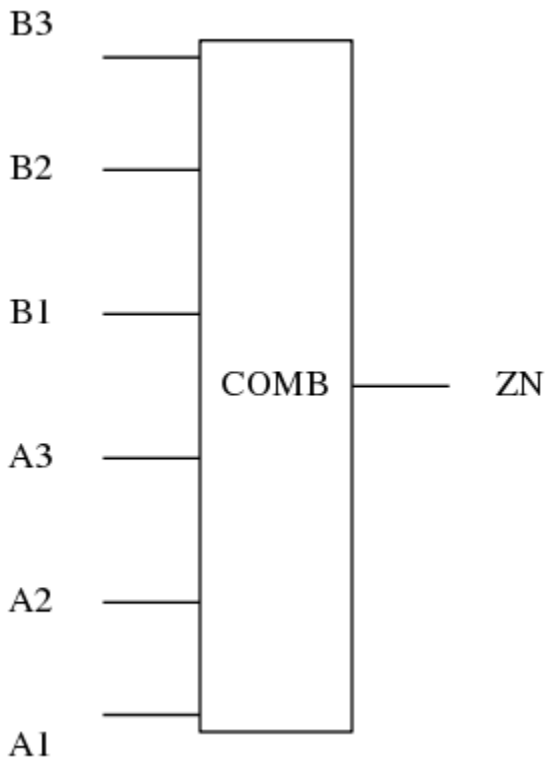

PIN CAPACITANCE (pf)

Pin	Type	Capacitance (pf)
B3	input	0.0098
B2	input	0.0094
B1	input	0.0090
A3	input	0.0099
A2	input	0.0094
A1	input	0.0099

DELAY AND OUTPUT TRANSITION TIME corresponding to min slew and load

Input Pin	Output	When Condition	Tin (ns)	Out Load (pf)	Delay (ns)	Tout (ns)
B3(HL)	ZN(LH)	!A1&!A2&A3&!B1&!B2	0.0100	0.0010	0.4849	0.4496

continues on next page

Table 109 – continued from previous page

B3(HL)	ZN(LH)	!A1&A2&!A3&!B1&!B2	0.0100	0.0010	0.4833	0.3866
B3(HL)	ZN(LH)	!A1&A2&A3&!B1&!B2	0.0100	0.0010	0.5213	0.4155
B3(HL)	ZN(LH)	A1&!A2&!A3&!B1&!B2	0.0100	0.0010	0.4600	0.3173
B3(HL)	ZN(LH)	A1&!A2&A3&!B1&!B2	0.0100	0.0010	0.4987	0.3478
B3(HL)	ZN(LH)	A1&A2&!A3&!B1&!B2	0.0100	0.0010	0.4987	0.3477
B3(HL)	ZN(LH)	A1&A2&A3&!B1&!B2	0.0100	0.0010	0.5333	0.3767
B3(LH)	ZN(HL)	!A1&!A2&A3&!B1&!B2	0.0100	0.0010	0.1832	0.1050
B3(LH)	ZN(HL)	!A1&A2&!A3&!B1&!B2	0.0100	0.0010	0.1682	0.0911
B3(LH)	ZN(HL)	!A1&A2&A3&!B1&!B2	0.0100	0.0010	0.1350	0.0797
B3(LH)	ZN(HL)	A1&!A2&!A3&!B1&!B2	0.0100	0.0010	0.1422	0.0758
B3(LH)	ZN(HL)	A1&!A2&A3&!B1&!B2	0.0100	0.0010	0.1158	0.0681
B3(LH)	ZN(HL)	A1&A2&!A3&!B1&!B2	0.0100	0.0010	0.1159	0.0682
B3(LH)	ZN(HL)	A1&A2&A3&!B1&!B2	0.0100	0.0010	0.1112	0.0749
B2(HL)	ZN(LH)	!A1&!A2&A3&!B1&!B3	0.0100	0.0010	0.4599	0.4496
B2(HL)	ZN(LH)	!A1&A2&!A3&!B1&!B3	0.0100	0.0010	0.4583	0.3865
B2(HL)	ZN(LH)	!A1&A2&A3&!B1&!B3	0.0100	0.0010	0.4963	0.4155
B2(HL)	ZN(LH)	A1&!A2&!A3&!B1&!B3	0.0100	0.0010	0.4350	0.3173
B2(HL)	ZN(LH)	A1&!A2&A3&!B1&!B3	0.0100	0.0010	0.4737	0.3478
B2(HL)	ZN(LH)	A1&A2&!A3&!B1&!B3	0.0100	0.0010	0.4737	0.3478
B2(HL)	ZN(LH)	A1&A2&A3&!B1&!B3	0.0100	0.0010	0.5085	0.3766
B2(LH)	ZN(HL)	!A1&!A2&A3&!B1&!B3	0.0100	0.0010	0.1705	0.0917
B2(LH)	ZN(HL)	!A1&A2&!A3&!B1&!B3	0.0100	0.0010	0.1582	0.0790
B2(LH)	ZN(HL)	!A1&A2&A3&!B1&!B3	0.0100	0.0010	0.1293	0.0699
B2(LH)	ZN(HL)	A1&!A2&!A3&!B1&!B3	0.0100	0.0010	0.1349	0.0639
B2(LH)	ZN(HL)	A1&!A2&A3&!B1&!B3	0.0100	0.0010	0.1121	0.0587
B2(LH)	ZN(HL)	A1&A2&!A3&!B1&!B3	0.0100	0.0010	0.1121	0.0588
B2(LH)	ZN(HL)	A1&A2&A3&!B1&!B3	0.0100	0.0010	0.1077	0.0656
B1(LH)	ZN(HL)	!A1&!A2&A3&!B2&!B3	0.0100	0.0010	0.1452	0.0762
B1(LH)	ZN(HL)	!A1&A2&!A3&!B2&!B3	0.0100	0.0010	0.1358	0.0642
B1(LH)	ZN(HL)	!A1&A2&A3&!B2&!B3	0.0100	0.0010	0.1129	0.0587
B1(LH)	ZN(HL)	A1&!A2&!A3&!B2&!B3	0.0100	0.0010	0.1141	0.0496
B1(LH)	ZN(HL)	A1&!A2&A3&!B2&!B3	0.0100	0.0010	0.0968	0.0475
B1(LH)	ZN(HL)	A1&A2&!A3&!B2&!B3	0.0100	0.0010	0.0969	0.0476
B1(LH)	ZN(HL)	A1&A2&A3&!B2&!B3	0.0100	0.0010	0.0931	0.0544
B1(HL)	ZN(LH)	!A1&!A2&A3&!B2&!B3	0.0100	0.0010	0.4007	0.4495
B1(HL)	ZN(LH)	!A1&A2&!A3&!B2&!B3	0.0100	0.0010	0.3990	0.3865
B1(HL)	ZN(LH)	!A1&A2&A3&!B2&!B3	0.0100	0.0010	0.4369	0.4156
B1(HL)	ZN(LH)	A1&!A2&!A3&!B2&!B3	0.0100	0.0010	0.3758	0.3173
B1(HL)	ZN(LH)	A1&!A2&A3&!B2&!B3	0.0100	0.0010	0.4146	0.3477
B1(HL)	ZN(LH)	A1&A2&!A3&!B2&!B3	0.0100	0.0010	0.4146	0.3477
B1(HL)	ZN(LH)	A1&A2&A3&!B2&!B3	0.0100	0.0010	0.4488	0.3759
A3(HL)	ZN(LH)	!A1&!A2&!B1&!B2&B3	0.0100	0.0010	0.2957	0.2845
A3(HL)	ZN(LH)	!A1&!A2&!B1&B2&!B3	0.0100	0.0010	0.2956	0.2366
A3(HL)	ZN(LH)	!A1&!A2&!B1&B2&B3	0.0100	0.0010	0.2944	0.2363
A3(HL)	ZN(LH)	!A1&!A2&B1&!B2&!B3	0.0100	0.0010	0.2792	0.1713
A3(HL)	ZN(LH)	!A1&!A2&B1&!B2&B3	0.0100	0.0010	0.2781	0.1711
A3(HL)	ZN(LH)	!A1&!A2&B1&B2&!B3	0.0100	0.0010	0.2779	0.1713
A3(HL)	ZN(LH)	!A1&!A2&B1&B2&B3	0.0100	0.0010	0.2772	0.1714
A3(LH)	ZN(HL)	!A1&!A2&!B1&!B2&B3	0.0100	0.0010	0.1361	0.1068
A3(LH)	ZN(HL)	!A1&!A2&!B1&B2&!B3	0.0100	0.0010	0.1213	0.0936
A3(LH)	ZN(HL)	!A1&!A2&!B1&B2&B3	0.0100	0.0010	0.0998	0.0714
A3(LH)	ZN(HL)	!A1&!A2&B1&!B2&!B3	0.0100	0.0010	0.0944	0.0779

continues on next page

Table 109 – continued from previous page

A3(LH)	ZN(HL)	!A1&!A2&B1&!B2&B3	0.0100	0.0010	0.0785	0.0584
A3(LH)	ZN(HL)	!A1&!A2&B1&B2&!B3	0.0100	0.0010	0.0786	0.0585
A3(LH)	ZN(HL)	!A1&!A2&B1&B2&B3	0.0100	0.0010	0.0736	0.0536
A2(HL)	ZN(LH)	!A1&!A3&!B1&!B2&B3	0.0100	0.0010	0.2676	0.2844
A2(HL)	ZN(LH)	!A1&!A3&!B1&B2&!B3	0.0100	0.0010	0.2675	0.2365
A2(HL)	ZN(LH)	!A1&!A3&!B1&B2&B3	0.0100	0.0010	0.2664	0.2365
A2(HL)	ZN(LH)	!A1&!A3&B1&!B2&!B3	0.0100	0.0010	0.2510	0.1712
A2(HL)	ZN(LH)	!A1&!A3&B1&!B2&B3	0.0100	0.0010	0.2500	0.1712
A2(HL)	ZN(LH)	!A1&!A3&B1&B2&!B3	0.0100	0.0010	0.2499	0.1711
A2(HL)	ZN(LH)	!A1&!A3&B1&B2&B3	0.0100	0.0010	0.2493	0.1712
A2(LH)	ZN(HL)	!A1&!A3&!B1&!B2&B3	0.0100	0.0010	0.1232	0.0908
A2(LH)	ZN(HL)	!A1&!A3&!B1&B2&!B3	0.0100	0.0010	0.1114	0.0787
A2(LH)	ZN(HL)	!A1&!A3&!B1&B2&B3	0.0100	0.0010	0.0940	0.0608
A2(LH)	ZN(HL)	!A1&!A3&B1&!B2&!B3	0.0100	0.0010	0.0882	0.0634
A2(LH)	ZN(HL)	!A1&!A3&B1&!B2&B3	0.0100	0.0010	0.0756	0.0493
A2(LH)	ZN(HL)	!A1&!A3&B1&B2&!B3	0.0100	0.0010	0.0756	0.0493
A2(LH)	ZN(HL)	!A1&!A3&B1&B2&B3	0.0100	0.0010	0.0715	0.0456
A1(HL)	ZN(LH)	!A2&!A3&!B1&!B2&B3	0.0100	0.0010	0.2079	0.2830
A1(HL)	ZN(LH)	!A2&!A3&!B1&B2&!B3	0.0100	0.0010	0.2077	0.2349
A1(HL)	ZN(LH)	!A2&!A3&!B1&B2&B3	0.0100	0.0010	0.2065	0.2349
A1(HL)	ZN(LH)	!A2&!A3&B1&!B2&!B3	0.0100	0.0010	0.1913	0.1699
A1(HL)	ZN(LH)	!A2&!A3&B1&!B2&B3	0.0100	0.0010	0.1901	0.1699
A1(HL)	ZN(LH)	!A2&!A3&B1&B2&!B3	0.0100	0.0010	0.1901	0.1699
A1(HL)	ZN(LH)	!A2&!A3&B1&B2&B3	0.0100	0.0010	0.1893	0.1699
A1(LH)	ZN(HL)	!A2&!A3&!B1&!B2&B3	0.0100	0.0010	0.0977	0.0747
A1(LH)	ZN(HL)	!A2&!A3&!B1&B2&!B3	0.0100	0.0010	0.0891	0.0629
A1(LH)	ZN(HL)	!A2&!A3&!B1&B2&B3	0.0100	0.0010	0.0765	0.0490
A1(LH)	ZN(HL)	!A2&!A3&B1&!B2&!B3	0.0100	0.0010	0.0681	0.0472
A1(LH)	ZN(HL)	!A2&!A3&B1&!B2&B3	0.0100	0.0010	0.0601	0.0371
A1(LH)	ZN(HL)	!A2&!A3&B1&B2&!B3	0.0100	0.0010	0.0602	0.0372
A1(LH)	ZN(HL)	!A2&!A3&B1&B2&B3	0.0100	0.0010	0.0573	0.0345

DYNAMIC ENERGY

Input Pin	When Condition	Tin (ns)	Output	Out Load (pf)	Energy (uW/MHz)
A1	!A2&!A3&!B1&!B2&B3	0.0100	ZN(LH)	0.0010	0.4322
A1	!A2&!A3&!B1&B2&!B3	0.0100	ZN(LH)	0.0010	0.3798
A1	!A2&!A3&!B1&B2&B3	0.0100	ZN(LH)	0.0010	0.3786
A1	!A2&!A3&B1&!B2&!B3	0.0100	ZN(LH)	0.0010	0.3263
A1	!A2&!A3&B1&!B2&B3	0.0100	ZN(LH)	0.0010	0.3252
A1	!A2&!A3&B1&B2&!B3	0.0100	ZN(LH)	0.0010	0.3252
A1	!A2&!A3&B1&B2&B3	0.0100	ZN(LH)	0.0010	0.3244
B2	!A1&!A2&A3&!B1&!B3	0.0100	ZN(LH)	0.0010	0.7509
B2	!A1&A2&!A3&!B1&!B3	0.0100	ZN(LH)	0.0010	0.6979
B2	!A1&A2&A3&!B1&!B3	0.0100	ZN(LH)	0.0010	0.7428
B2	A1&!A2&!A3&!B1&!B3	0.0100	ZN(LH)	0.0010	0.6443
B2	A1&!A2&A3&!B1&!B3	0.0100	ZN(LH)	0.0010	0.6896

continues on next page

Table 110 – continued from previous page

B2	A1&A2&!A3&!B1&!B3	0.0100	ZN(LH)	0.0010	0.6896
B2	A1&A2&A3&!B1&!B3	0.0100	ZN(LH)	0.0010	0.7337
B1	!A1&!A2&A3&!B2&!B3	0.0100	ZN(HL)	0.0010	0.1133
B1	!A1&A2&!A3&!B2&!B3	0.0100	ZN(HL)	0.0010	0.0590
B1	!A1&A2&A3&!B2&!B3	0.0100	ZN(HL)	0.0010	0.0589
B1	A1&!A2&!A3&!B2&!B3	0.0100	ZN(HL)	0.0010	0.0102
B1	A1&!A2&A3&!B2&!B3	0.0100	ZN(HL)	0.0010	0.0103
B1	A1&A2&!A3&!B2&!B3	0.0100	ZN(HL)	0.0010	0.0103
B1	A1&A2&A3&!B2&!B3	0.0100	ZN(HL)	0.0010	0.0103
A2	!A1&!A3&!B1&!B2&B3	0.0100	ZN(LH)	0.0010	0.4860
A2	!A1&!A3&!B1&B2&!B3	0.0100	ZN(LH)	0.0010	0.4337
A2	!A1&!A3&!B1&B2&B3	0.0100	ZN(LH)	0.0010	0.4325
A2	!A1&!A3&B1&!B2&!B3	0.0100	ZN(LH)	0.0010	0.3802
A2	!A1&!A3&B1&!B2&B3	0.0100	ZN(LH)	0.0010	0.3791
A2	!A1&!A3&B1&B2&!B3	0.0100	ZN(LH)	0.0010	0.3790
A2	!A1&!A3&B1&B2&B3	0.0100	ZN(LH)	0.0010	0.3783
B1	!A1&!A2&A3&!B2&!B3	0.0100	ZN(LH)	0.0010	0.6974
B1	!A1&A2&!A3&!B2&!B3	0.0100	ZN(LH)	0.0010	0.6443
B1	!A1&A2&A3&!B2&!B3	0.0100	ZN(LH)	0.0010	0.6892
B1	A1&!A2&!A3&!B2&!B3	0.0100	ZN(LH)	0.0010	0.5909
B1	A1&!A2&A3&!B2&!B3	0.0100	ZN(LH)	0.0010	0.6359
B1	A1&A2&!A3&!B2&!B3	0.0100	ZN(LH)	0.0010	0.6359
B1	A1&A2&A3&!B2&!B3	0.0100	ZN(LH)	0.0010	0.6801
B3	!A1&!A2&A3&!B1&!B2	0.0100	ZN(LH)	0.0010	0.8033
B3	!A1&A2&!A3&!B1&!B2	0.0100	ZN(LH)	0.0010	0.7503
B3	!A1&A2&A3&!B1&!B2	0.0100	ZN(LH)	0.0010	0.7952
B3	A1&!A2&!A3&!B1&!B2	0.0100	ZN(LH)	0.0010	0.6969
B3	A1&!A2&A3&!B1&!B2	0.0100	ZN(LH)	0.0010	0.7420
B3	A1&A2&!A3&!B1&!B2	0.0100	ZN(LH)	0.0010	0.7420
B3	A1&A2&A3&!B1&!B2	0.0100	ZN(LH)	0.0010	0.7862
A2	!A1&!A3&!B1&!B2&B3	0.0100	ZN(HL)	0.0010	0.1517
A2	!A1&!A3&!B1&B2&!B3	0.0100	ZN(HL)	0.0010	0.1046
A2	!A1&!A3&!B1&B2&B3	0.0100	ZN(HL)	0.0010	0.1048
A2	!A1&!A3&B1&!B2&!B3	0.0100	ZN(HL)	0.0010	0.0566
A2	!A1&!A3&B1&!B2&B3	0.0100	ZN(HL)	0.0010	0.0565
A2	!A1&!A3&B1&B2&!B3	0.0100	ZN(HL)	0.0010	0.0565
A2	!A1&!A3&B1&B2&B3	0.0100	ZN(HL)	0.0010	0.0564
B3	!A1&!A2&A3&!B1&!B2	0.0100	ZN(HL)	0.0010	0.2018
B3	!A1&A2&!A3&!B1&!B2	0.0100	ZN(HL)	0.0010	0.1473
B3	!A1&A2&A3&!B1&!B2	0.0100	ZN(HL)	0.0010	0.1471
B3	A1&!A2&!A3&!B1&!B2	0.0100	ZN(HL)	0.0010	0.0994
B3	A1&!A2&A3&!B1&!B2	0.0100	ZN(HL)	0.0010	0.0996
B3	A1&A2&!A3&!B1&!B2	0.0100	ZN(HL)	0.0010	0.0994
B3	A1&A2&A3&!B1&!B2	0.0100	ZN(HL)	0.0010	0.0994
A3	!A1&!A2&!B1&!B2&B3	0.0100	ZN(LH)	0.0010	0.5392
A3	!A1&!A2&!B1&B2&!B3	0.0100	ZN(LH)	0.0010	0.4868
A3	!A1&!A2&!B1&B2&B3	0.0100	ZN(LH)	0.0010	0.4857
A3	!A1&!A2&B1&!B2&!B3	0.0100	ZN(LH)	0.0010	0.4334
A3	!A1&!A2&B1&!B2&B3	0.0100	ZN(LH)	0.0010	0.4322
A3	!A1&!A2&B1&B2&!B3	0.0100	ZN(LH)	0.0010	0.4324
A3	!A1&!A2&B1&B2&B3	0.0100	ZN(LH)	0.0010	0.4317
A3	!A1&!A2&!B1&!B2&B3	0.0100	ZN(HL)	0.0010	0.2023

continues on next page

Table 110 – continued from previous page

A3	!A1&!A2&!B1&B2&!B3	0.0100	ZN(HL)	0.0010	0.1551
A3	!A1&!A2&!B1&B2&B3	0.0100	ZN(HL)	0.0010	0.1551
A3	!A1&!A2&B1&!B2&!B3	0.0100	ZN(HL)	0.0010	0.1072
A3	!A1&!A2&B1&!B2&B3	0.0100	ZN(HL)	0.0010	0.1073
A3	!A1&!A2&B1&B2&!B3	0.0100	ZN(HL)	0.0010	0.1072
A3	!A1&!A2&B1&B2&B3	0.0100	ZN(HL)	0.0010	0.1072
A1	!A2&!A3&!B1&!B2&B3	0.0100	ZN(HL)	0.0010	0.1066
A1	!A2&!A3&!B1&B2&!B3	0.0100	ZN(HL)	0.0010	0.0593
A1	!A2&!A3&!B1&B2&B3	0.0100	ZN(HL)	0.0010	0.0592
A1	!A2&!A3&B1&!B2&!B3	0.0100	ZN(HL)	0.0010	0.0107
A1	!A2&!A3&B1&!B2&B3	0.0100	ZN(HL)	0.0010	0.0107
A1	!A2&!A3&B1&B2&!B3	0.0100	ZN(HL)	0.0010	0.0107
A1	!A2&!A3&B1&B2&B3	0.0100	ZN(HL)	0.0010	0.0107
B2	!A1&!A2&A3&!B1&!B3	0.0100	ZN(HL)	0.0010	0.1587
B2	!A1&A2&!A3&!B1&!B3	0.0100	ZN(HL)	0.0010	0.1042
B2	!A1&A2&A3&!B1&!B3	0.0100	ZN(HL)	0.0010	0.1043
B2	A1&!A2&!A3&!B1&!B3	0.0100	ZN(HL)	0.0010	0.0567
B2	A1&!A2&A3&!B1&!B3	0.0100	ZN(HL)	0.0010	0.0565
B2	A1&A2&!A3&!B1&!B3	0.0100	ZN(HL)	0.0010	0.0565
B2	A1&A2&A3&!B1&!B3	0.0100	ZN(HL)	0.0010	0.0565
B2(LH)	!A1&!A2&!A3&!B1&!B3	0.0100	n/a	n/a	-0.0706
B2(LH)	!A1&!A2&!A3&!B1&B3	0.0100	n/a	n/a	-0.0685
B2(LH)	!A1&!A2&!A3&B1&!B3	0.0100	n/a	n/a	-0.0684
B2(LH)	!A1&!A2&!A3&B1&B3	0.0100	n/a	n/a	-0.0658
B2(LH)	!A1&!A2&A3&!B1&B3	0.0100	n/a	n/a	-0.0215
B2(LH)	!A1&!A2&A3&B1&!B3	0.0100	n/a	n/a	-0.0585
B2(LH)	!A1&!A2&A3&B1&B3	0.0100	n/a	n/a	-0.0517
B2(LH)	!A1&A2&!A3&!B1&B3	0.0100	n/a	n/a	-0.0215
B2(LH)	!A1&A2&!A3&B1&!B3	0.0100	n/a	n/a	-0.0585
B2(LH)	!A1&A2&!A3&B1&B3	0.0100	n/a	n/a	-0.0517
B2(LH)	!A1&A2&A3&!B1&B3	0.0100	n/a	n/a	-0.0215
B2(LH)	!A1&A2&A3&B1&!B3	0.0100	n/a	n/a	-0.0585
B2(LH)	!A1&A2&A3&B1&B3	0.0100	n/a	n/a	-0.0517
B2(LH)	A1&!A2&!A3&!B1&B3	0.0100	n/a	n/a	-0.0215
B2(LH)	A1&!A2&!A3&B1&!B3	0.0100	n/a	n/a	-0.0585
B2(LH)	A1&!A2&!A3&B1&B3	0.0100	n/a	n/a	-0.0517
B2(LH)	A1&!A2&A3&!B1&B3	0.0100	n/a	n/a	-0.0215
B2(LH)	A1&!A2&A3&B1&!B3	0.0100	n/a	n/a	-0.0585
B2(LH)	A1&!A2&A3&B1&B3	0.0100	n/a	n/a	-0.0517
B2(LH)	A1&A2&!A3&!B1&B3	0.0100	n/a	n/a	-0.0215
B2(LH)	A1&A2&!A3&B1&!B3	0.0100	n/a	n/a	-0.0585
B2(LH)	A1&A2&!A3&B1&B3	0.0100	n/a	n/a	-0.0517
B2(LH)	A1&A2&A3&!B1&B3	0.0100	n/a	n/a	-0.0215
B2(LH)	A1&A2&A3&B1&!B3	0.0100	n/a	n/a	-0.0585
B2(LH)	A1&A2&A3&B1&B3	0.0100	n/a	n/a	-0.0517
A3(LH)	!A1&!A2&!B1&!B2&!B3	0.0100	n/a	n/a	0.1345
A3(LH)	!A1&A2&!B1&!B2&!B3	0.0100	n/a	n/a	-0.0770
A3(LH)	A1&!A2&!B1&!B2&!B3	0.0100	n/a	n/a	-0.0701
A3(LH)	A1&A2&!B1&!B2&!B3	0.0100	n/a	n/a	-0.0755
A3(LH)	!A1&A2&!B1&!B2&B3	0.0100	n/a	n/a	-0.0608
A3(LH)	!A1&A2&!B1&B2&!B3	0.0100	n/a	n/a	-0.0608
A3(LH)	!A1&A2&!B1&B2&B3	0.0100	n/a	n/a	-0.0608

continues on next page

Table 110 – continued from previous page

A3(LH)	!A1&A2&B1&!B2&!B3	0.0100	n/a	n/a	-0.0608
A3(LH)	!A1&A2&B1&!B2&B3	0.0100	n/a	n/a	-0.0608
A3(LH)	!A1&A2&B1&B2&!B3	0.0100	n/a	n/a	-0.0608
A3(LH)	!A1&A2&B1&B2&B3	0.0100	n/a	n/a	-0.0608
A3(LH)	A1&!A2&!B1&!B2&B3	0.0100	n/a	n/a	-0.0594
A3(LH)	A1&!A2&!B1&B2&!B3	0.0100	n/a	n/a	-0.0594
A3(LH)	A1&!A2&!B1&B2&B3	0.0100	n/a	n/a	-0.0594
A3(LH)	A1&!A2&B1&!B2&!B3	0.0100	n/a	n/a	-0.0594
A3(LH)	A1&!A2&B1&!B2&B3	0.0100	n/a	n/a	-0.0594
A3(LH)	A1&!A2&B1&B2&!B3	0.0100	n/a	n/a	-0.0594
A3(LH)	A1&!A2&B1&B2&B3	0.0100	n/a	n/a	-0.0594
A3(LH)	A1&A2&!B1&!B2&B3	0.0100	n/a	n/a	-0.0664
A3(LH)	A1&A2&!B1&B2&!B3	0.0100	n/a	n/a	-0.0664
A3(LH)	A1&A2&!B1&B2&B3	0.0100	n/a	n/a	-0.0664
A3(LH)	A1&A2&B1&!B2&!B3	0.0100	n/a	n/a	-0.0664
A3(LH)	A1&A2&B1&!B2&B3	0.0100	n/a	n/a	-0.0664
A3(LH)	A1&A2&B1&B2&!B3	0.0100	n/a	n/a	-0.0664
A3(LH)	A1&A2&B1&B2&B3	0.0100	n/a	n/a	-0.0664
A3(HL)	!A1&!A2&!B1&!B2&!B3	0.0100	n/a	n/a	0.0795
A3(HL)	!A1&A2&!B1&!B2&!B3	0.0100	n/a	n/a	0.0798
A3(HL)	A1&!A2&!B1&!B2&!B3	0.0100	n/a	n/a	0.0797
A3(HL)	A1&A2&!B1&!B2&!B3	0.0100	n/a	n/a	0.0798
A3(HL)	!A1&A2&!B1&!B2&B3	0.0100	n/a	n/a	0.0703
A3(HL)	!A1&A2&!B1&B2&!B3	0.0100	n/a	n/a	0.0703
A3(HL)	!A1&A2&!B1&B2&B3	0.0100	n/a	n/a	0.0703
A3(HL)	!A1&A2&B1&!B2&!B3	0.0100	n/a	n/a	0.0703
A3(HL)	!A1&A2&B1&!B2&B3	0.0100	n/a	n/a	0.0703
A3(HL)	!A1&A2&B1&B2&!B3	0.0100	n/a	n/a	0.0703
A3(HL)	!A1&A2&B1&B2&B3	0.0100	n/a	n/a	0.0703
A3(HL)	A1&!A2&!B1&!B2&B3	0.0100	n/a	n/a	0.0704
A3(HL)	A1&!A2&!B1&B2&!B3	0.0100	n/a	n/a	0.0703
A3(HL)	A1&!A2&!B1&B2&B3	0.0100	n/a	n/a	0.0703
A3(HL)	A1&!A2&B1&!B2&!B3	0.0100	n/a	n/a	0.0703
A3(HL)	A1&!A2&B1&!B2&B3	0.0100	n/a	n/a	0.0703
A3(HL)	A1&!A2&B1&B2&!B3	0.0100	n/a	n/a	0.0703
A3(HL)	A1&!A2&B1&B2&B3	0.0100	n/a	n/a	0.0703
A3(HL)	A1&A2&!B1&!B2&B3	0.0100	n/a	n/a	0.0703
A3(HL)	A1&A2&!B1&B2&!B3	0.0100	n/a	n/a	0.0703
A3(HL)	A1&A2&!B1&B2&B3	0.0100	n/a	n/a	0.0703
A3(HL)	A1&A2&B1&!B2&!B3	0.0100	n/a	n/a	0.0703
A3(HL)	A1&A2&B1&!B2&B3	0.0100	n/a	n/a	0.0703
A3(HL)	A1&A2&B1&B2&!B3	0.0100	n/a	n/a	0.0703
A3(HL)	A1&A2&B1&B2&B3	0.0100	n/a	n/a	0.0703
B2(HL)	!A1&!A2&!A3&!B1&!B3	0.0100	n/a	n/a	0.0749
B2(HL)	!A1&!A2&!A3&!B1&B3	0.0100	n/a	n/a	0.0706
B2(HL)	!A1&!A2&!A3&B1&!B3	0.0100	n/a	n/a	0.0705
B2(HL)	!A1&!A2&!A3&B1&B3	0.0100	n/a	n/a	0.0428
B2(HL)	!A1&!A2&A3&!B1&B3	0.0100	n/a	n/a	0.0486
B2(HL)	!A1&!A2&A3&B1&!B3	0.0100	n/a	n/a	0.0705
B2(HL)	!A1&!A2&A3&B1&B3	0.0100	n/a	n/a	0.0428
B2(HL)	!A1&A2&!A3&!B1&B3	0.0100	n/a	n/a	0.0486
B2(HL)	!A1&A2&!A3&B1&!B3	0.0100	n/a	n/a	0.0705

continues on next page

Table 110 – continued from previous page

B2(HL)	!A1&A2&!A3&B1&B3	0.0100	n/a	n/a	0.0428
B2(HL)	!A1&A2&A3&!B1&B3	0.0100	n/a	n/a	0.0486
B2(HL)	!A1&A2&A3&B1&!B3	0.0100	n/a	n/a	0.0705
B2(HL)	!A1&A2&A3&B1&B3	0.0100	n/a	n/a	0.0429
B2(HL)	A1&!A2&!A3&!B1&B3	0.0100	n/a	n/a	0.0486
B2(HL)	A1&!A2&!A3&B1&!B3	0.0100	n/a	n/a	0.0705
B2(HL)	A1&!A2&!A3&B1&B3	0.0100	n/a	n/a	0.0428
B2(HL)	A1&!A2&A3&!B1&B3	0.0100	n/a	n/a	0.0486
B2(HL)	A1&!A2&A3&B1&!B3	0.0100	n/a	n/a	0.0705
B2(HL)	A1&!A2&A3&B1&B3	0.0100	n/a	n/a	0.0429
B2(HL)	A1&A2&!A3&!B1&B3	0.0100	n/a	n/a	0.0486
B2(HL)	A1&A2&!A3&B1&!B3	0.0100	n/a	n/a	0.0705
B2(HL)	A1&A2&!A3&B1&B3	0.0100	n/a	n/a	0.0429
B2(HL)	A1&A2&A3&!B1&B3	0.0100	n/a	n/a	0.0486
B2(HL)	A1&A2&A3&B1&!B3	0.0100	n/a	n/a	0.0705
B2(HL)	A1&A2&A3&B1&B3	0.0100	n/a	n/a	0.0429
B3(LH)	!A1&!A2&!A3&!B1&!B2	0.0100	n/a	n/a	-0.0703
B3(LH)	!A1&!A2&!A3&!B1&B2	0.0100	n/a	n/a	-0.0681
B3(LH)	!A1&!A2&!A3&B1&!B2	0.0100	n/a	n/a	-0.0608
B3(LH)	!A1&!A2&!A3&B1&B2	0.0100	n/a	n/a	-0.0666
B3(LH)	!A1&!A2&A3&!B1&B2	0.0100	n/a	n/a	-0.0610
B3(LH)	!A1&!A2&A3&B1&!B2	0.0100	n/a	n/a	-0.0588
B3(LH)	!A1&!A2&A3&B1&B2	0.0100	n/a	n/a	-0.0666
B3(LH)	!A1&A2&!A3&!B1&B2	0.0100	n/a	n/a	-0.0611
B3(LH)	!A1&A2&!A3&B1&!B2	0.0100	n/a	n/a	-0.0588
B3(LH)	!A1&A2&!A3&B1&B2	0.0100	n/a	n/a	-0.0666
B3(LH)	!A1&A2&A3&!B1&B2	0.0100	n/a	n/a	-0.0610
B3(LH)	!A1&A2&A3&B1&!B2	0.0100	n/a	n/a	-0.0588
B3(LH)	!A1&A2&A3&B1&B2	0.0100	n/a	n/a	-0.0666
B3(LH)	A1&!A2&!A3&!B1&B2	0.0100	n/a	n/a	-0.0611
B3(LH)	A1&!A2&!A3&B1&!B2	0.0100	n/a	n/a	-0.0588
B3(LH)	A1&!A2&!A3&B1&B2	0.0100	n/a	n/a	-0.0666
B3(LH)	A1&!A2&A3&!B1&B2	0.0100	n/a	n/a	-0.0610
B3(LH)	A1&!A2&A3&B1&!B2	0.0100	n/a	n/a	-0.0588
B3(LH)	A1&!A2&A3&B1&B2	0.0100	n/a	n/a	-0.0666
B3(LH)	A1&A2&!A3&!B1&B2	0.0100	n/a	n/a	-0.0611
B3(LH)	A1&A2&!A3&B1&!B2	0.0100	n/a	n/a	-0.0588
B3(LH)	A1&A2&!A3&B1&B2	0.0100	n/a	n/a	-0.0666
B3(LH)	A1&A2&A3&!B1&B2	0.0100	n/a	n/a	-0.0610
B3(LH)	A1&A2&A3&B1&!B2	0.0100	n/a	n/a	-0.0588
B3(LH)	A1&A2&A3&B1&B2	0.0100	n/a	n/a	-0.0666
B3(HL)	!A1&!A2&!A3&!B1&!B2	0.0100	n/a	n/a	0.0747
B3(HL)	!A1&!A2&!A3&!B1&B2	0.0100	n/a	n/a	0.0703
B3(HL)	!A1&!A2&!A3&B1&!B2	0.0100	n/a	n/a	0.0703
B3(HL)	!A1&!A2&!A3&B1&B2	0.0100	n/a	n/a	0.0703
B3(HL)	!A1&!A2&A3&!B1&B2	0.0100	n/a	n/a	0.0704
B3(HL)	!A1&!A2&A3&B1&!B2	0.0100	n/a	n/a	0.0703
B3(HL)	!A1&!A2&A3&B1&B2	0.0100	n/a	n/a	0.0704
B3(HL)	!A1&A2&!A3&!B1&B2	0.0100	n/a	n/a	0.0703
B3(HL)	!A1&A2&!A3&B1&!B2	0.0100	n/a	n/a	0.0703
B3(HL)	!A1&A2&!A3&B1&B2	0.0100	n/a	n/a	0.0703
B3(HL)	!A1&A2&A3&!B1&B2	0.0100	n/a	n/a	0.0703

continues on next page

Table 110 – continued from previous page

B3(HL)	!A1&A2&A3&B1&!B2	0.0100	n/a	n/a	0.0704
B3(HL)	!A1&A2&A3&B1&B2	0.0100	n/a	n/a	0.0703
B3(HL)	A1&!A2&!A3&!B1&B2	0.0100	n/a	n/a	0.0703
B3(HL)	A1&!A2&!A3&B1&!B2	0.0100	n/a	n/a	0.0703
B3(HL)	A1&!A2&!A3&B1&B2	0.0100	n/a	n/a	0.0704
B3(HL)	A1&!A2&A3&!B1&B2	0.0100	n/a	n/a	0.0703
B3(HL)	A1&!A2&A3&B1&!B2	0.0100	n/a	n/a	0.0704
B3(HL)	A1&!A2&A3&B1&B2	0.0100	n/a	n/a	0.0703
B3(HL)	A1&A2&!A3&!B1&B2	0.0100	n/a	n/a	0.0703
B3(HL)	A1&A2&!A3&B1&!B2	0.0100	n/a	n/a	0.0704
B3(HL)	A1&A2&!A3&B1&B2	0.0100	n/a	n/a	0.0703
B3(HL)	A1&A2&A3&!B1&B2	0.0100	n/a	n/a	0.0703
B3(HL)	A1&A2&A3&B1&!B2	0.0100	n/a	n/a	0.0704
B3(HL)	A1&A2&A3&B1&B2	0.0100	n/a	n/a	0.0703
A2(LH)	!A1&!A3&!B1&!B2&!B3	0.0100	n/a	n/a	0.1344
A2(LH)	!A1&A3&!B1&!B2&!B3	0.0100	n/a	n/a	-0.0774
A2(LH)	A1&!A3&!B1&!B2&!B3	0.0100	n/a	n/a	-0.0775
A2(LH)	A1&A3&!B1&!B2&!B3	0.0100	n/a	n/a	-0.0747
A2(LH)	!A1&A3&!B1&!B2&B3	0.0100	n/a	n/a	-0.0217
A2(LH)	!A1&A3&!B1&B2&!B3	0.0100	n/a	n/a	-0.0217
A2(LH)	!A1&A3&!B1&B2&B3	0.0100	n/a	n/a	-0.0217
A2(LH)	!A1&A3&B1&!B2&!B3	0.0100	n/a	n/a	-0.0217
A2(LH)	!A1&A3&B1&!B2&B3	0.0100	n/a	n/a	-0.0217
A2(LH)	!A1&A3&B1&B2&!B3	0.0100	n/a	n/a	-0.0217
A2(LH)	!A1&A3&B1&B2&B3	0.0100	n/a	n/a	-0.0217
A2(LH)	A1&!A3&!B1&!B2&B3	0.0100	n/a	n/a	-0.0585
A2(LH)	A1&!A3&!B1&B2&!B3	0.0100	n/a	n/a	-0.0586
A2(LH)	A1&!A3&!B1&B2&B3	0.0100	n/a	n/a	-0.0585
A2(LH)	A1&!A3&B1&!B2&!B3	0.0100	n/a	n/a	-0.0586
A2(LH)	A1&!A3&B1&!B2&B3	0.0100	n/a	n/a	-0.0586
A2(LH)	A1&!A3&B1&B2&!B3	0.0100	n/a	n/a	-0.0585
A2(LH)	A1&!A3&B1&B2&B3	0.0100	n/a	n/a	-0.0586
A2(LH)	A1&A3&!B1&!B2&B3	0.0100	n/a	n/a	-0.0515
A2(LH)	A1&A3&!B1&B2&!B3	0.0100	n/a	n/a	-0.0515
A2(LH)	A1&A3&!B1&B2&B3	0.0100	n/a	n/a	-0.0515
A2(LH)	A1&A3&B1&!B2&!B3	0.0100	n/a	n/a	-0.0515
A2(LH)	A1&A3&B1&!B2&B3	0.0100	n/a	n/a	-0.0515
A2(LH)	A1&A3&B1&B2&!B3	0.0100	n/a	n/a	-0.0515
A2(LH)	A1&A3&B1&B2&B3	0.0100	n/a	n/a	-0.0515
A1(LH)	!A2&!A3&!B1&!B2&!B3	0.0100	n/a	n/a	0.1340
A1(LH)	!A2&A3&!B1&!B2&!B3	0.0100	n/a	n/a	-0.0707
A1(LH)	A2&!A3&!B1&!B2&!B3	0.0100	n/a	n/a	-0.0778
A1(LH)	A2&A3&!B1&!B2&!B3	0.0100	n/a	n/a	-0.0764
A1(LH)	!A2&A3&!B1&!B2&B3	0.0100	n/a	n/a	-0.0198
A1(LH)	!A2&A3&!B1&B2&!B3	0.0100	n/a	n/a	-0.0198
A1(LH)	!A2&A3&!B1&B2&B3	0.0100	n/a	n/a	-0.0198
A1(LH)	!A2&A3&B1&!B2&!B3	0.0100	n/a	n/a	-0.0198
A1(LH)	!A2&A3&B1&!B2&B3	0.0100	n/a	n/a	-0.0198
A1(LH)	!A2&A3&B1&B2&!B3	0.0100	n/a	n/a	-0.0198
A1(LH)	!A2&A3&B1&B2&B3	0.0100	n/a	n/a	-0.0198
A1(LH)	A2&!A3&!B1&!B2&B3	0.0100	n/a	n/a	-0.0201
A1(LH)	A2&!A3&!B1&B2&!B3	0.0100	n/a	n/a	-0.0201

continues on next page

Table 110 – continued from previous page

A1(LH)	A2&!A3&!B1&B2&B3	0.0100	n/a	n/a	-0.0200
A1(LH)	A2&!A3&B1&!B2&!B3	0.0100	n/a	n/a	-0.0201
A1(LH)	A2&!A3&B1&!B2&B3	0.0100	n/a	n/a	-0.0200
A1(LH)	A2&!A3&B1&B2&!B3	0.0100	n/a	n/a	-0.0200
A1(LH)	A2&!A3&B1&B2&B3	0.0100	n/a	n/a	-0.0200
A1(LH)	A2&A3&!B1&!B2&B3	0.0100	n/a	n/a	-0.0201
A1(LH)	A2&A3&!B1&B2&!B3	0.0100	n/a	n/a	-0.0201
A1(LH)	A2&A3&!B1&B2&B3	0.0100	n/a	n/a	-0.0200
A1(LH)	A2&A3&B1&!B2&!B3	0.0100	n/a	n/a	-0.0201
A1(LH)	A2&A3&B1&!B2&B3	0.0100	n/a	n/a	-0.0200
A1(LH)	A2&A3&B1&B2&!B3	0.0100	n/a	n/a	-0.0200
A1(LH)	A2&A3&B1&B2&B3	0.0100	n/a	n/a	-0.0200
A2(HL)	!A1&!A3&!B1&!B2&!B3	0.0100	n/a	n/a	0.0796
A2(HL)	!A1&A3&!B1&!B2&!B3	0.0100	n/a	n/a	0.0797
A2(HL)	A1&!A3&!B1&!B2&!B3	0.0100	n/a	n/a	0.0800
A2(HL)	A1&A3&!B1&!B2&!B3	0.0100	n/a	n/a	0.0537
A2(HL)	!A1&A3&!B1&!B2&B3	0.0100	n/a	n/a	0.0558
A2(HL)	!A1&A3&!B1&B2&!B3	0.0100	n/a	n/a	0.0558
A2(HL)	!A1&A3&!B1&B2&B3	0.0100	n/a	n/a	0.0558
A2(HL)	!A1&A3&B1&!B2&!B3	0.0100	n/a	n/a	0.0558
A2(HL)	!A1&A3&B1&!B2&B3	0.0100	n/a	n/a	0.0558
A2(HL)	!A1&A3&B1&B2&!B3	0.0100	n/a	n/a	0.0558
A2(HL)	!A1&A3&B1&B2&B3	0.0100	n/a	n/a	0.0558
A2(HL)	A1&!A3&!B1&!B2&B3	0.0100	n/a	n/a	0.0705
A2(HL)	A1&!A3&!B1&B2&!B3	0.0100	n/a	n/a	0.0705
A2(HL)	A1&!A3&!B1&B2&B3	0.0100	n/a	n/a	0.0705
A2(HL)	A1&!A3&B1&!B2&!B3	0.0100	n/a	n/a	0.0705
A2(HL)	A1&!A3&B1&!B2&B3	0.0100	n/a	n/a	0.0705
A2(HL)	A1&!A3&B1&B2&!B3	0.0100	n/a	n/a	0.0705
A2(HL)	A1&!A3&B1&B2&B3	0.0100	n/a	n/a	0.0705
A2(HL)	A1&A3&!B1&!B2&B3	0.0100	n/a	n/a	0.0441
A2(HL)	A1&A3&!B1&B2&!B3	0.0100	n/a	n/a	0.0441
A2(HL)	A1&A3&!B1&B2&B3	0.0100	n/a	n/a	0.0441
A2(HL)	A1&A3&B1&!B2&!B3	0.0100	n/a	n/a	0.0441
A2(HL)	A1&A3&B1&!B2&B3	0.0100	n/a	n/a	0.0441
A2(HL)	A1&A3&B1&B2&!B3	0.0100	n/a	n/a	0.0441
A2(HL)	A1&A3&B1&B2&B3	0.0100	n/a	n/a	0.0441
B1(HL)	!A1&!A2&!A3&!B2&!B3	0.0100	n/a	n/a	0.0751
B1(HL)	!A1&!A2&!A3&!B2&B3	0.0100	n/a	n/a	0.0708
B1(HL)	!A1&!A2&!A3&B2&!B3	0.0100	n/a	n/a	0.0708
B1(HL)	!A1&!A2&!A3&B2&B3	0.0100	n/a	n/a	0.0708
B1(HL)	!A1&!A2&A3&!B2&B3	0.0100	n/a	n/a	0.0986
B1(HL)	!A1&!A2&A3&B2&!B3	0.0100	n/a	n/a	0.0512
B1(HL)	!A1&!A2&A3&B2&B3	0.0100	n/a	n/a	0.0512
B1(HL)	!A1&A2&!A3&!B2&B3	0.0100	n/a	n/a	0.0987
B1(HL)	!A1&A2&!A3&B2&!B3	0.0100	n/a	n/a	0.0512
B1(HL)	!A1&A2&!A3&B2&B3	0.0100	n/a	n/a	0.0512
B1(HL)	!A1&A2&A3&!B2&B3	0.0100	n/a	n/a	0.0987
B1(HL)	!A1&A2&A3&B2&!B3	0.0100	n/a	n/a	0.0512
B1(HL)	!A1&A2&A3&B2&B3	0.0100	n/a	n/a	0.0512
B1(HL)	A1&!A2&!A3&!B2&B3	0.0100	n/a	n/a	0.0987
B1(HL)	A1&!A2&!A3&B2&!B3	0.0100	n/a	n/a	0.0512

continues on next page

Table 110 – continued from previous page

B1(HL)	A1&!A2&!A3&B2&B3	0.0100	n/a	n/a	0.0512
B1(HL)	A1&!A2&A3&!B2&B3	0.0100	n/a	n/a	0.0987
B1(HL)	A1&!A2&A3&B2&!B3	0.0100	n/a	n/a	0.0512
B1(HL)	A1&!A2&A3&B2&B3	0.0100	n/a	n/a	0.0512
B1(HL)	A1&A2&!A3&!B2&B3	0.0100	n/a	n/a	0.0987
B1(HL)	A1&A2&!A3&B2&!B3	0.0100	n/a	n/a	0.0512
B1(HL)	A1&A2&!A3&B2&B3	0.0100	n/a	n/a	0.0512
B1(HL)	A1&A2&A3&!B2&B3	0.0100	n/a	n/a	0.0987
B1(HL)	A1&A2&A3&B2&!B3	0.0100	n/a	n/a	0.0512
B1(HL)	A1&A2&A3&B2&B3	0.0100	n/a	n/a	0.0512
A1(HL)	!A2&!A3&!B1&!B2&!B3	0.0100	n/a	n/a	0.0799
A1(HL)	!A2&A3&!B1&!B2&!B3	0.0100	n/a	n/a	0.0800
A1(HL)	A2&!A3&!B1&!B2&!B3	0.0100	n/a	n/a	0.0800
A1(HL)	A2&A3&!B1&!B2&!B3	0.0100	n/a	n/a	0.0801
A1(HL)	!A2&A3&!B1&!B2&B3	0.0100	n/a	n/a	0.1059
A1(HL)	!A2&A3&!B1&B2&!B3	0.0100	n/a	n/a	0.1059
A1(HL)	!A2&A3&!B1&B2&B3	0.0100	n/a	n/a	0.1059
A1(HL)	!A2&A3&B1&!B2&!B3	0.0100	n/a	n/a	0.1059
A1(HL)	!A2&A3&B1&!B2&B3	0.0100	n/a	n/a	0.1059
A1(HL)	!A2&A3&B1&B2&!B3	0.0100	n/a	n/a	0.1059
A1(HL)	!A2&A3&B1&B2&B3	0.0100	n/a	n/a	0.1059
A1(HL)	A2&!A3&!B1&!B2&B3	0.0100	n/a	n/a	0.0512
A1(HL)	A2&!A3&!B1&B2&!B3	0.0100	n/a	n/a	0.0512
A1(HL)	A2&!A3&!B1&B2&B3	0.0100	n/a	n/a	0.0512
A1(HL)	A2&!A3&B1&!B2&!B3	0.0100	n/a	n/a	0.0512
A1(HL)	A2&!A3&B1&!B2&B3	0.0100	n/a	n/a	0.0512
A1(HL)	A2&!A3&B1&B2&!B3	0.0100	n/a	n/a	0.0512
A1(HL)	A2&!A3&B1&B2&B3	0.0100	n/a	n/a	0.0512
A1(HL)	A2&A3&!B1&!B2&B3	0.0100	n/a	n/a	0.0512
A1(HL)	A2&A3&!B1&B2&!B3	0.0100	n/a	n/a	0.0512
A1(HL)	A2&A3&!B1&B2&B3	0.0100	n/a	n/a	0.0512
A1(HL)	A2&A3&B1&!B2&!B3	0.0100	n/a	n/a	0.0512
A1(HL)	A2&A3&B1&!B2&B3	0.0100	n/a	n/a	0.0512
A1(HL)	A2&A3&B1&B2&!B3	0.0100	n/a	n/a	0.0512
A1(HL)	A2&A3&B1&B2&B3	0.0100	n/a	n/a	0.0512
B1(LH)	!A1&!A2&!A3&!B2&!B3	0.0100	n/a	n/a	-0.0709
B1(LH)	!A1&!A2&!A3&!B2&B3	0.0100	n/a	n/a	-0.0617
B1(LH)	!A1&!A2&!A3&B2&!B3	0.0100	n/a	n/a	-0.0688
B1(LH)	!A1&!A2&!A3&B2&B3	0.0100	n/a	n/a	-0.0673
B1(LH)	!A1&!A2&A3&!B2&B3	0.0100	n/a	n/a	-0.0196
B1(LH)	!A1&!A2&A3&B2&!B3	0.0100	n/a	n/a	-0.0201
B1(LH)	!A1&!A2&A3&B2&B3	0.0100	n/a	n/a	-0.0201
B1(LH)	!A1&A2&!A3&!B2&B3	0.0100	n/a	n/a	-0.0196
B1(LH)	!A1&A2&!A3&B2&!B3	0.0100	n/a	n/a	-0.0201
B1(LH)	!A1&A2&!A3&B2&B3	0.0100	n/a	n/a	-0.0201
B1(LH)	!A1&A2&A3&!B2&B3	0.0100	n/a	n/a	-0.0196
B1(LH)	!A1&A2&A3&B2&!B3	0.0100	n/a	n/a	-0.0201
B1(LH)	!A1&A2&A3&B2&B3	0.0100	n/a	n/a	-0.0201
B1(LH)	A1&!A2&!A3&!B2&B3	0.0100	n/a	n/a	-0.0196
B1(LH)	A1&!A2&!A3&B2&!B3	0.0100	n/a	n/a	-0.0201
B1(LH)	A1&!A2&!A3&B2&B3	0.0100	n/a	n/a	-0.0201
B1(LH)	A1&!A2&A3&!B2&B3	0.0100	n/a	n/a	-0.0196

continues on next page

Table 110 – continued from previous page

B1(LH)	A1&!A2&A3&B2&!B3	0.0100	n/a	n/a	-0.0201
B1(LH)	A1&!A2&A3&B2&B3	0.0100	n/a	n/a	-0.0201
B1(LH)	A1&A2&!A3&!B2&B3	0.0100	n/a	n/a	-0.0196
B1(LH)	A1&A2&!A3&B2&!B3	0.0100	n/a	n/a	-0.0201
B1(LH)	A1&A2&!A3&B2&B3	0.0100	n/a	n/a	-0.0201
B1(LH)	A1&A2&A3&!B2&B3	0.0100	n/a	n/a	-0.0196
B1(LH)	A1&A2&A3&B2&!B3	0.0100	n/a	n/a	-0.0201
B1(LH)	A1&A2&A3&B2&B3	0.0100	n/a	n/a	-0.0201

LEAKAGE POWER

When Condition	Power (nW)
!A1&!A2&!A3&!B1&!B2&!B3	0.2013
!A1&!A2&!A3&!B1&!B2&B3	0.2027
!A1&!A2&!A3&!B1&B2&!B3	0.2027
!A1&!A2&!A3&!B1&B2&B3	0.2027
!A1&!A2&!A3&B1&!B2&!B3	0.2027
!A1&!A2&!A3&B1&!B2&B3	0.2027
!A1&!A2&!A3&B1&B2&!B3	0.2027
!A1&!A2&!A3&B1&B2&B3	0.2027
!A1&!A2&A3&!B1&!B2&!B3	0.4409
!A1&A2&!A3&!B1&!B2&!B3	0.4409
!A1&A2&A3&!B1&!B2&!B3	0.4420
A1&!A2&!A3&!B1&!B2&!B3	0.4409
A1&!A2&A3&!B1&!B2&!B3	0.4420
A1&A2&!A3&!B1&!B2&!B3	0.4420
A1&A2&A3&!B1&!B2&!B3	0.4427
!A1&!A2&A3&!B1&!B2&B3	0.4399
!A1&!A2&A3&!B1&B2&!B3	0.3691
!A1&!A2&A3&!B1&B2&B3	0.3691
!A1&!A2&A3&B1&!B2&!B3	0.2978
!A1&!A2&A3&B1&!B2&B3	0.2978
!A1&!A2&A3&B1&B2&!B3	0.2978
!A1&!A2&A3&B1&B2&B3	0.2978
!A1&A2&!A3&!B1&!B2&B3	0.3691
!A1&A2&!A3&!B1&B2&!B3	0.2984
!A1&A2&!A3&!B1&B2&B3	0.2984
!A1&A2&!A3&B1&!B2&!B3	0.2270
!A1&A2&!A3&B1&!B2&B3	0.2270
!A1&A2&!A3&B1&B2&!B3	0.2270
!A1&A2&!A3&B1&B2&B3	0.2270
!A1&A2&A3&!B1&!B2&B3	0.3691
!A1&A2&A3&!B1&B2&!B3	0.2984
!A1&A2&A3&!B1&B2&B3	0.2984
!A1&A2&A3&B1&!B2&!B3	0.2270
!A1&A2&A3&B1&!B2&B3	0.2270
!A1&A2&A3&B1&B2&!B3	0.2270

continues on next page

Table 111 – continued from previous page

!A1&A2&A3&B1&B2&B3	0.2270
A1&!A2&!A3&!B1&!B2&B3	0.2978
A1&!A2&!A3&!B1&B2&!B3	0.2270
A1&!A2&!A3&!B1&B2&B3	0.2270
A1&!A2&!A3&B1&!B2&!B3	0.1557
A1&!A2&!A3&B1&!B2&B3	0.1557
A1&!A2&!A3&B1&B2&!B3	0.1557
A1&!A2&!A3&B1&B2&B3	0.1557
A1&!A2&A3&!B1&!B2&B3	0.2978
A1&!A2&A3&!B1&B2&!B3	0.2270
A1&!A2&A3&!B1&B2&B3	0.2270
A1&!A2&A3&B1&!B2&!B3	0.1557
A1&!A2&A3&B1&!B2&B3	0.1557
A1&!A2&A3&B1&B2&!B3	0.1557
A1&!A2&A3&B1&B2&B3	0.1557
A1&A2&!A3&!B1&!B2&B3	0.2978
A1&A2&!A3&!B1&B2&!B3	0.2270
A1&A2&!A3&!B1&B2&B3	0.2270
A1&A2&!A3&B1&!B2&!B3	0.1557
A1&A2&!A3&B1&!B2&B3	0.1557
A1&A2&!A3&B1&B2&!B3	0.1557
A1&A2&!A3&B1&B2&B3	0.1557
A1&A2&A3&!B1&!B2&B3	0.2978
A1&A2&A3&!B1&B2&!B3	0.2270
A1&A2&A3&!B1&B2&B3	0.2270
A1&A2&A3&B1&!B2&!B3	0.1557
A1&A2&A3&B1&!B2&B3	0.1557
A1&A2&A3&B1&B2&!B3	0.1557
A1&A2&A3&B1&B2&B3	0.1557

gf180mcu_fd_sc_mcu7t5v0__oai33_4

gf180mcu_fd_sc_mcu7t5v0__oai33_4 symbol

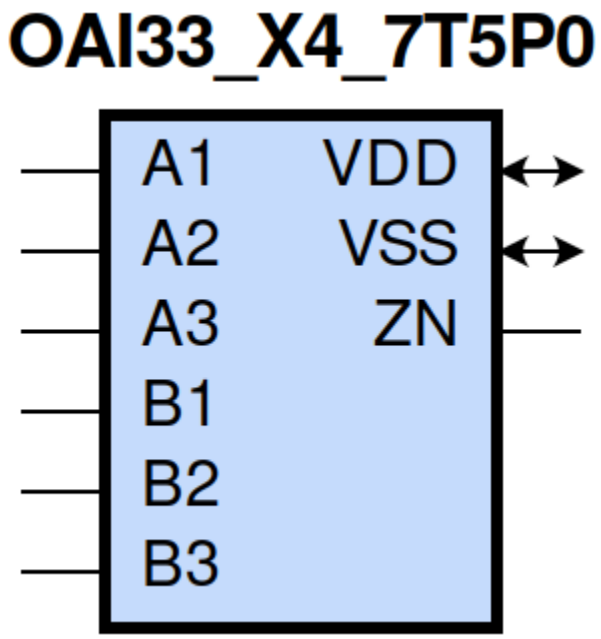

gf180mcu_fd_sc_mcu7t5v0__oai33_4 schematic

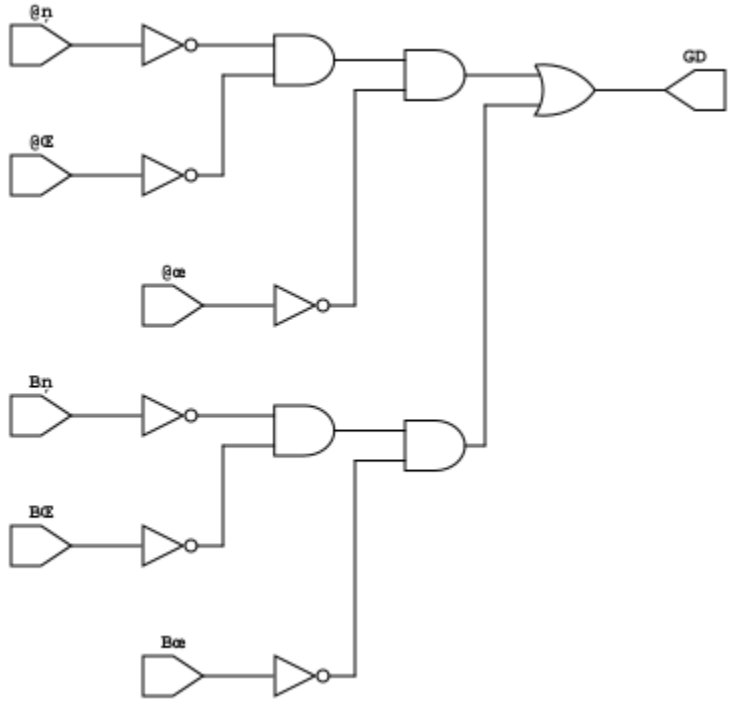

gf180mcu_fd_sc_mcu7t5v0__oai33_4 layout

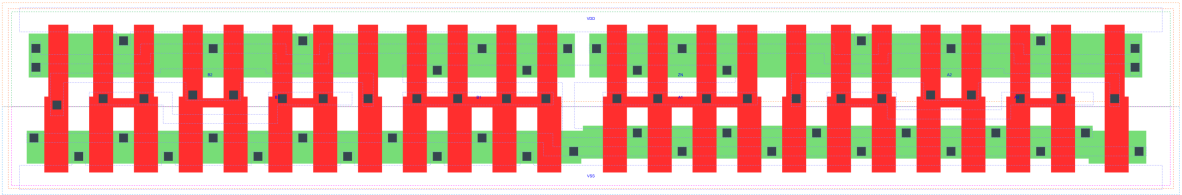

OAI33_X4 is a two 3-input OR into 2-input NAND, NAND[OR(A1,A2,A3),OR(B1,B2,B3], 4X drive strength

Attributes

Attribute	Value
area	111.955200 μm^2

OUTPUT FUNCTIONS

Output Pin	Function
ZN	(((!A1)&(!A2)&(!A3))|((!B1)&(!B2)&(!B3)))

TRUTH TABLE FOR ZN

A1	A2	A3	B1	B2	B3	ZN
0	0	0	?	?	?	1
?	?	?	0	0	0	1
1	?	?	1	?	?	0
1	?	?	?	1	?	0
1	?	?	?	?	1	0
?	1	?	1	?	?	0
?	1	?	?	1	?	0
?	1	?	?	?	1	0
?	?	1	1	?	?	0
?	?	1	?	1	?	0
?	?	1	?	?	1	0

FUNCTIONAL SCHEMATIC

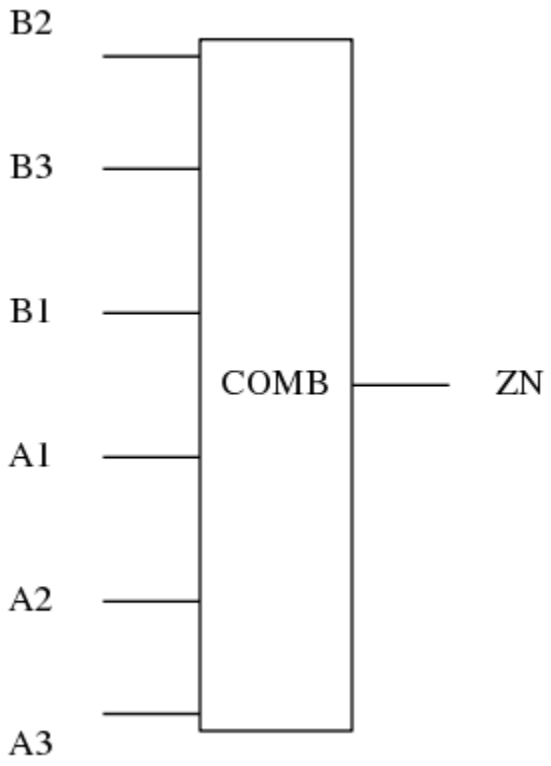

PIN CAPACITANCE (pf)

Pin	Type	Capacitance (pf)
B2	input	0.0184
B3	input	0.0176
B1	input	0.0174
A1	input	0.0177
A2	input	0.0186
A3	input	0.0179

DELAY AND OUTPUT TRANSITION TIME corresponding to min slew and load

Input Pin	Output	When Condition	Tin (ns)	Out Load (pf)	Delay (ns)	Tout (ns)
B2(HL)	ZN(LH)	!A1&!A2&A3&!B1&!B3	0.0100	0.0010	0.4462	0.4489
B2(HL)	ZN(LH)	!A1&A2&!A3&!B1&!B3	0.0100	0.0010	0.4458	0.3913
B2(HL)	ZN(LH)	!A1&A2&A3&!B1&!B3	0.0100	0.0010	0.4840	0.4199
B2(HL)	ZN(LH)	A1&!A2&!A3&!B1&!B3	0.0100	0.0010	0.4203	0.2945
B2(HL)	ZN(LH)	A1&!A2&A3&!B1&!B3	0.0100	0.0010	0.4595	0.3244

continues on next page

Table 112 – continued from previous page

B2(HL)	ZN(LH)	A1&A2&!A3&!B1&!B3	0.0100	0.0010	0.4595	0.3244
B2(HL)	ZN(LH)	A1&A2&A3&!B1&!B3	0.0100	0.0010	0.4939	0.3532
B2(LH)	ZN(HL)	!A1&!A2&A3&!B1&!B3	0.0100	0.0010	0.1697	0.0925
B2(LH)	ZN(HL)	!A1&A2&!A3&!B1&!B3	0.0100	0.0010	0.1588	0.0806
B2(LH)	ZN(HL)	!A1&A2&A3&!B1&!B3	0.0100	0.0010	0.1284	0.0718
B2(LH)	ZN(HL)	A1&!A2&!A3&!B1&!B3	0.0100	0.0010	0.1289	0.0609
B2(LH)	ZN(HL)	A1&!A2&A3&!B1&!B3	0.0100	0.0010	0.1068	0.0566
B2(LH)	ZN(HL)	A1&A2&!A3&!B1&!B3	0.0100	0.0010	0.1068	0.0566
B2(LH)	ZN(HL)	A1&A2&A3&!B1&!B3	0.0100	0.0010	0.1028	0.0639
B3(HL)	ZN(LH)	!A1&!A2&A3&!B1&!B2	0.0100	0.0010	0.4718	0.4489
B3(HL)	ZN(LH)	!A1&A2&!A3&!B1&!B2	0.0100	0.0010	0.4715	0.3913
B3(HL)	ZN(LH)	!A1&A2&A3&!B1&!B2	0.0100	0.0010	0.5097	0.4199
B3(HL)	ZN(LH)	A1&!A2&!A3&!B1&!B2	0.0100	0.0010	0.4459	0.2941
B3(HL)	ZN(LH)	A1&!A2&A3&!B1&!B2	0.0100	0.0010	0.4850	0.3244
B3(HL)	ZN(LH)	A1&A2&!A3&!B1&!B2	0.0100	0.0010	0.4851	0.3244
B3(HL)	ZN(LH)	A1&A2&A3&!B1&!B2	0.0100	0.0010	0.5197	0.3526
B3(LH)	ZN(HL)	!A1&!A2&A3&!B1&!B2	0.0100	0.0010	0.1808	0.1057
B3(LH)	ZN(HL)	!A1&A2&!A3&!B1&!B2	0.0100	0.0010	0.1675	0.0928
B3(LH)	ZN(HL)	!A1&A2&A3&!B1&!B2	0.0100	0.0010	0.1328	0.0809
B3(LH)	ZN(HL)	A1&!A2&!A3&!B1&!B2	0.0100	0.0010	0.1339	0.0716
B3(LH)	ZN(HL)	A1&!A2&A3&!B1&!B2	0.0100	0.0010	0.1088	0.0649
B3(LH)	ZN(HL)	A1&A2&!A3&!B1&!B2	0.0100	0.0010	0.1088	0.0649
B3(LH)	ZN(HL)	A1&A2&A3&!B1&!B2	0.0100	0.0010	0.1046	0.0723
B1(LH)	ZN(HL)	!A1&!A2&A3&!B2&!B3	0.0100	0.0010	0.1361	0.0710
B1(LH)	ZN(HL)	!A1&A2&!A3&!B2&!B3	0.0100	0.0010	0.1292	0.0609
B1(LH)	ZN(HL)	!A1&A2&A3&!B2&!B3	0.0100	0.0010	0.1071	0.0565
B1(LH)	ZN(HL)	A1&!A2&!A3&!B2&!B3	0.0100	0.0010	0.1039	0.0424
B1(LH)	ZN(HL)	A1&!A2&A3&!B2&!B3	0.0100	0.0010	0.0887	0.0420
B1(LH)	ZN(HL)	A1&A2&!A3&!B2&!B3	0.0100	0.0010	0.0887	0.0420
B1(LH)	ZN(HL)	A1&A2&A3&!B2&!B3	0.0100	0.0010	0.0854	0.0491
B1(HL)	ZN(LH)	!A1&!A2&A3&!B2&!B3	0.0100	0.0010	0.3590	0.4485
B1(HL)	ZN(LH)	!A1&A2&!A3&!B2&!B3	0.0100	0.0010	0.3586	0.3910
B1(HL)	ZN(LH)	!A1&A2&A3&!B2&!B3	0.0100	0.0010	0.3966	0.4196
B1(HL)	ZN(LH)	A1&!A2&!A3&!B2&!B3	0.0100	0.0010	0.3331	0.2939
B1(HL)	ZN(LH)	A1&!A2&A3&!B2&!B3	0.0100	0.0010	0.3719	0.3240
B1(HL)	ZN(LH)	A1&A2&!A3&!B2&!B3	0.0100	0.0010	0.3719	0.3240
B1(HL)	ZN(LH)	A1&A2&A3&!B2&!B3	0.0100	0.0010	0.4067	0.3527
A1(HL)	ZN(LH)	!A2&!A3&!B1&!B2&B3	0.0100	0.0010	0.1686	0.2814
A1(HL)	ZN(LH)	!A2&!A3&!B1&B2&!B3	0.0100	0.0010	0.1685	0.2364
A1(HL)	ZN(LH)	!A2&!A3&!B1&B2&B3	0.0100	0.0010	0.1675	0.2365
A1(HL)	ZN(LH)	!A2&!A3&B1&!B2&!B3	0.0100	0.0010	0.1528	0.1460
A1(HL)	ZN(LH)	!A2&!A3&B1&!B2&B3	0.0100	0.0010	0.1516	0.1459
A1(HL)	ZN(LH)	!A2&!A3&B1&B2&!B3	0.0100	0.0010	0.1516	0.1459
A1(HL)	ZN(LH)	!A2&!A3&B1&B2&B3	0.0100	0.0010	0.1509	0.1458
A1(LH)	ZN(HL)	!A2&!A3&!B1&!B2&B3	0.0100	0.0010	0.0899	0.0701
A1(LH)	ZN(HL)	!A2&!A3&!B1&B2&!B3	0.0100	0.0010	0.0835	0.0598
A1(LH)	ZN(HL)	!A2&!A3&!B1&B2&B3	0.0100	0.0010	0.0712	0.0454
A1(LH)	ZN(HL)	!A2&!A3&B1&!B2&!B3	0.0100	0.0010	0.0593	0.0395
A1(LH)	ZN(HL)	!A2&!A3&B1&!B2&B3	0.0100	0.0010	0.0528	0.0312
A1(LH)	ZN(HL)	!A2&!A3&B1&B2&!B3	0.0100	0.0010	0.0528	0.0312
A1(LH)	ZN(HL)	!A2&!A3&B1&B2&B3	0.0100	0.0010	0.0504	0.0289
A2(HL)	ZN(LH)	!A1&!A3&!B1&!B2&B3	0.0100	0.0010	0.2556	0.2869

continues on next page

Table 112 – continued from previous page

A2(HL)	ZN(LH)	!A1&!A3&!B1&B2&!B3	0.0100	0.0010	0.2555	0.2417
A2(HL)	ZN(LH)	!A1&!A3&!B1&B2&B3	0.0100	0.0010	0.2545	0.2419
A2(HL)	ZN(LH)	!A1&!A3&B1&!B2&!B3	0.0100	0.0010	0.2394	0.1514
A2(HL)	ZN(LH)	!A1&!A3&B1&!B2&B3	0.0100	0.0010	0.2383	0.1514
A2(HL)	ZN(LH)	!A1&!A3&B1&B2&!B3	0.0100	0.0010	0.2382	0.1516
A2(HL)	ZN(LH)	!A1&!A3&B1&B2&B3	0.0100	0.0010	0.2374	0.1515
A2(LH)	ZN(HL)	!A1&!A3&!B1&!B2&B3	0.0100	0.0010	0.1238	0.0926
A2(LH)	ZN(HL)	!A1&!A3&!B1&B2&!B3	0.0100	0.0010	0.1130	0.0808
A2(LH)	ZN(HL)	!A1&!A3&!B1&B2&B3	0.0100	0.0010	0.0939	0.0618
A2(LH)	ZN(HL)	!A1&!A3&B1&!B2&!B3	0.0100	0.0010	0.0830	0.0607
A2(LH)	ZN(HL)	!A1&!A3&B1&!B2&B3	0.0100	0.0010	0.0706	0.0465
A2(LH)	ZN(HL)	!A1&!A3&B1&B2&!B3	0.0100	0.0010	0.0706	0.0466
A2(LH)	ZN(HL)	!A1&!A3&B1&B2&B3	0.0100	0.0010	0.0665	0.0428
A3(HL)	ZN(LH)	!A1&!A2&!B1&!B2&B3	0.0100	0.0010	0.2819	0.2870
A3(HL)	ZN(LH)	!A1&!A2&!B1&B2&!B3	0.0100	0.0010	0.2821	0.2421
A3(HL)	ZN(LH)	!A1&!A2&!B1&B2&B3	0.0100	0.0010	0.2810	0.2421
A3(HL)	ZN(LH)	!A1&!A2&B1&!B2&!B3	0.0100	0.0010	0.2656	0.1517
A3(HL)	ZN(LH)	!A1&!A2&B1&!B2&B3	0.0100	0.0010	0.2647	0.1517
A3(HL)	ZN(LH)	!A1&!A2&B1&B2&!B3	0.0100	0.0010	0.2647	0.1517
A3(HL)	ZN(LH)	!A1&!A2&B1&B2&B3	0.0100	0.0010	0.2640	0.1517
A3(LH)	ZN(HL)	!A1&!A2&!B1&!B2&B3	0.0100	0.0010	0.1348	0.1080
A3(LH)	ZN(HL)	!A1&!A2&!B1&B2&!B3	0.0100	0.0010	0.1212	0.0947
A3(LH)	ZN(HL)	!A1&!A2&!B1&B2&B3	0.0100	0.0010	0.0984	0.0712
A3(LH)	ZN(HL)	!A1&!A2&B1&!B2&!B3	0.0100	0.0010	0.0864	0.0730
A3(LH)	ZN(HL)	!A1&!A2&B1&!B2&B3	0.0100	0.0010	0.0715	0.0538
A3(LH)	ZN(HL)	!A1&!A2&B1&B2&!B3	0.0100	0.0010	0.0715	0.0538
A3(LH)	ZN(HL)	!A1&!A2&B1&B2&B3	0.0100	0.0010	0.0669	0.0489

DYNAMIC ENERGY

Input Pin	When Condition	Tin (ns)	Output	Out Load (pf)	Energy (uW/MHz)
A1	!A2&!A3&!B1&!B2&B3	0.0100	ZN(LH)	0.0010	0.8527
A1	!A2&!A3&!B1&B2&!B3	0.0100	ZN(LH)	0.0010	0.7480
A1	!A2&!A3&!B1&B2&B3	0.0100	ZN(LH)	0.0010	0.7456
A1	!A2&!A3&B1&!B2&!B3	0.0100	ZN(LH)	0.0010	0.5747
A1	!A2&!A3&B1&!B2&B3	0.0100	ZN(LH)	0.0010	0.5723
A1	!A2&!A3&B1&B2&!B3	0.0100	ZN(LH)	0.0010	0.5723
A1	!A2&!A3&B1&B2&B3	0.0100	ZN(LH)	0.0010	0.5709
B2	!A1&!A2&A3&!B1&!B3	0.0100	ZN(LH)	0.0010	1.5452
B2	!A1&A2&!A3&!B1&!B3	0.0100	ZN(LH)	0.0010	1.4400
B2	!A1&A2&A3&!B1&!B3	0.0100	ZN(LH)	0.0010	1.5298
B2	A1&!A2&!A3&!B1&!B3	0.0100	ZN(LH)	0.0010	1.2663
B2	A1&!A2&A3&!B1&!B3	0.0100	ZN(LH)	0.0010	1.3564
B2	A1&A2&!A3&!B1&!B3	0.0100	ZN(LH)	0.0010	1.3564
B2	A1&A2&A3&!B1&!B3	0.0100	ZN(LH)	0.0010	1.4447
B1	!A1&!A2&A3&!B2&!B3	0.0100	ZN(HL)	0.0010	0.2280
B1	!A1&A2&!A3&!B2&!B3	0.0100	ZN(HL)	0.0010	0.1262

continues on next page

Table 113 – continued from previous page

B1	!A1&A2&A3&!B2&!B3	0.0100	ZN(HL)	0.0010	0.1265
B1	A1&!A2&!A3&!B2&!B3	0.0100	ZN(HL)	0.0010	0.0177
B1	A1&!A2&A3&!B2&!B3	0.0100	ZN(HL)	0.0010	0.0181
B1	A1&A2&!A3&!B2&!B3	0.0100	ZN(HL)	0.0010	0.0180
B1	A1&A2&A3&!B2&!B3	0.0100	ZN(HL)	0.0010	0.0182
A2	!A1&!A3&!B1&!B2&B3	0.0100	ZN(LH)	0.0010	1.0272
A2	!A1&!A3&!B1&B2&!B3	0.0100	ZN(LH)	0.0010	0.9223
A2	!A1&!A3&!B1&B2&B3	0.0100	ZN(LH)	0.0010	0.9202
A2	!A1&!A3&B1&!B2&!B3	0.0100	ZN(LH)	0.0010	0.7490
A2	!A1&!A3&B1&!B2&B3	0.0100	ZN(LH)	0.0010	0.7469
A2	!A1&!A3&B1&B2&!B3	0.0100	ZN(LH)	0.0010	0.7467
A2	!A1&!A3&B1&B2&B3	0.0100	ZN(LH)	0.0010	0.7455
B1	!A1&!A2&A3&!B2&!B3	0.0100	ZN(LH)	0.0010	1.3719
B1	!A1&A2&!A3&!B2&!B3	0.0100	ZN(LH)	0.0010	1.2666
B1	!A1&A2&A3&!B2&!B3	0.0100	ZN(LH)	0.0010	1.3566
B1	A1&!A2&!A3&!B2&!B3	0.0100	ZN(LH)	0.0010	1.0930
B1	A1&!A2&A3&!B2&!B3	0.0100	ZN(LH)	0.0010	1.1830
B1	A1&A2&!A3&!B2&!B3	0.0100	ZN(LH)	0.0010	1.1830
B1	A1&A2&A3&!B2&!B3	0.0100	ZN(LH)	0.0010	1.2712
B3	!A1&!A2&A3&!B1&!B2	0.0100	ZN(LH)	0.0010	1.6502
B3	!A1&A2&!A3&!B1&!B2	0.0100	ZN(LH)	0.0010	1.5450
B3	!A1&A2&A3&!B1&!B2	0.0100	ZN(LH)	0.0010	1.6348
B3	A1&!A2&!A3&!B1&!B2	0.0100	ZN(LH)	0.0010	1.3711
B3	A1&!A2&A3&!B1&!B2	0.0100	ZN(LH)	0.0010	1.4615
B3	A1&A2&!A3&!B1&!B2	0.0100	ZN(LH)	0.0010	1.4613
B3	A1&A2&A3&!B1&!B2	0.0100	ZN(LH)	0.0010	1.5495
A2	!A1&!A3&!B1&!B2&B3	0.0100	ZN(HL)	0.0010	0.3309
A2	!A1&!A3&!B1&B2&!B3	0.0100	ZN(HL)	0.0010	0.2333
A2	!A1&!A3&!B1&B2&B3	0.0100	ZN(HL)	0.0010	0.2336
A2	!A1&!A3&B1&!B2&!B3	0.0100	ZN(HL)	0.0010	0.1258
A2	!A1&!A3&B1&!B2&B3	0.0100	ZN(HL)	0.0010	0.1257
A2	!A1&!A3&B1&B2&!B3	0.0100	ZN(HL)	0.0010	0.1257
A2	!A1&!A3&B1&B2&B3	0.0100	ZN(HL)	0.0010	0.1258
B3	!A1&!A2&A3&!B1&!B2	0.0100	ZN(HL)	0.0010	0.4219
B3	!A1&A2&!A3&!B1&!B2	0.0100	ZN(HL)	0.0010	0.3201
B3	!A1&A2&A3&!B1&!B2	0.0100	ZN(HL)	0.0010	0.3199
B3	A1&!A2&!A3&!B1&!B2	0.0100	ZN(HL)	0.0010	0.2139
B3	A1&!A2&A3&!B1&!B2	0.0100	ZN(HL)	0.0010	0.2140
B3	A1&A2&!A3&!B1&!B2	0.0100	ZN(HL)	0.0010	0.2138
B3	A1&A2&A3&!B1&!B2	0.0100	ZN(HL)	0.0010	0.2139
A3	!A1&!A2&!B1&!B2&B3	0.0100	ZN(LH)	0.0010	1.1325
A3	!A1&!A2&!B1&B2&!B3	0.0100	ZN(LH)	0.0010	1.0276
A3	!A1&!A2&!B1&B2&B3	0.0100	ZN(LH)	0.0010	1.0256
A3	!A1&!A2&B1&!B2&!B3	0.0100	ZN(LH)	0.0010	0.8543
A3	!A1&!A2&B1&!B2&B3	0.0100	ZN(LH)	0.0010	0.8523
A3	!A1&!A2&B1&B2&!B3	0.0100	ZN(LH)	0.0010	0.8523
A3	!A1&!A2&B1&B2&B3	0.0100	ZN(LH)	0.0010	0.8511
A3	!A1&!A2&!B1&!B2&B3	0.0100	ZN(HL)	0.0010	0.4227
A3	!A1&!A2&!B1&B2&!B3	0.0100	ZN(HL)	0.0010	0.3250
A3	!A1&!A2&!B1&B2&B3	0.0100	ZN(HL)	0.0010	0.3249
A3	!A1&!A2&B1&!B2&!B3	0.0100	ZN(HL)	0.0010	0.2175
A3	!A1&!A2&B1&!B2&B3	0.0100	ZN(HL)	0.0010	0.2174

continues on next page

Table 113 – continued from previous page

A3	!A1&!A2&B1&B2&!B3	0.0100	ZN(HL)	0.0010	0.2176
A3	!A1&!A2&B1&B2&B3	0.0100	ZN(HL)	0.0010	0.2176
A1	!A2&!A3&!B1&!B2&B3	0.0100	ZN(HL)	0.0010	0.2258
A1	!A2&!A3&!B1&B2&!B3	0.0100	ZN(HL)	0.0010	0.1280
A1	!A2&!A3&!B1&B2&B3	0.0100	ZN(HL)	0.0010	0.1282
A1	!A2&!A3&B1&!B2&!B3	0.0100	ZN(HL)	0.0010	0.0186
A1	!A2&!A3&B1&!B2&B3	0.0100	ZN(HL)	0.0010	0.0185
A1	!A2&!A3&B1&B2&!B3	0.0100	ZN(HL)	0.0010	0.0185
A1	!A2&!A3&B1&B2&B3	0.0100	ZN(HL)	0.0010	0.0185
B2	!A1&!A2&A3&!B1&!B3	0.0100	ZN(HL)	0.0010	0.3337
B2	!A1&A2&!A3&!B1&!B3	0.0100	ZN(HL)	0.0010	0.2325
B2	!A1&A2&A3&!B1&!B3	0.0100	ZN(HL)	0.0010	0.2329
B2	A1&!A2&!A3&!B1&!B3	0.0100	ZN(HL)	0.0010	0.1262
B2	A1&!A2&A3&!B1&!B3	0.0100	ZN(HL)	0.0010	0.1260
B2	A1&A2&!A3&!B1&!B3	0.0100	ZN(HL)	0.0010	0.1260
B2	A1&A2&A3&!B1&!B3	0.0100	ZN(HL)	0.0010	0.1261
B2(LH)	!A1&!A2&!A3&!B1&!B3	0.0100	n/a	n/a	-0.1412
B2(LH)	!A1&!A2&!A3&!B1&B3	0.0100	n/a	n/a	-0.1369
B2(LH)	!A1&!A2&!A3&B1&!B3	0.0100	n/a	n/a	-0.1283
B2(LH)	!A1&!A2&!A3&B1&B3	0.0100	n/a	n/a	-0.1228
B2(LH)	!A1&!A2&A3&!B1&B3	0.0100	n/a	n/a	-0.0440
B2(LH)	!A1&!A2&A3&B1&!B3	0.0100	n/a	n/a	-0.1077
B2(LH)	!A1&!A2&A3&B1&B3	0.0100	n/a	n/a	-0.0924
B2(LH)	!A1&A2&!A3&!B1&B3	0.0100	n/a	n/a	-0.0440
B2(LH)	!A1&A2&!A3&B1&!B3	0.0100	n/a	n/a	-0.1077
B2(LH)	!A1&A2&!A3&B1&B3	0.0100	n/a	n/a	-0.0924
B2(LH)	!A1&A2&A3&!B1&B3	0.0100	n/a	n/a	-0.0440
B2(LH)	!A1&A2&A3&B1&!B3	0.0100	n/a	n/a	-0.1077
B2(LH)	!A1&A2&A3&B1&B3	0.0100	n/a	n/a	-0.0924
B2(LH)	A1&!A2&!A3&!B1&B3	0.0100	n/a	n/a	-0.0440
B2(LH)	A1&!A2&!A3&B1&!B3	0.0100	n/a	n/a	-0.1077
B2(LH)	A1&!A2&!A3&B1&B3	0.0100	n/a	n/a	-0.0924
B2(LH)	A1&!A2&A3&!B1&B3	0.0100	n/a	n/a	-0.0440
B2(LH)	A1&!A2&A3&B1&!B3	0.0100	n/a	n/a	-0.1077
B2(LH)	A1&!A2&A3&B1&B3	0.0100	n/a	n/a	-0.0923
B2(LH)	A1&A2&!A3&!B1&B3	0.0100	n/a	n/a	-0.0440
B2(LH)	A1&A2&!A3&B1&!B3	0.0100	n/a	n/a	-0.1077
B2(LH)	A1&A2&!A3&B1&B3	0.0100	n/a	n/a	-0.0923
B2(LH)	A1&A2&A3&!B1&B3	0.0100	n/a	n/a	-0.0440
B2(LH)	A1&A2&A3&B1&!B3	0.0100	n/a	n/a	-0.1077
B2(LH)	A1&A2&A3&B1&B3	0.0100	n/a	n/a	-0.0923
A3(LH)	!A1&!A2&!B1&!B2&!B3	0.0100	n/a	n/a	0.2562
A3(LH)	!A1&A2&!B1&!B2&!B3	0.0100	n/a	n/a	-0.1542
A3(LH)	A1&!A2&!B1&!B2&!B3	0.0100	n/a	n/a	-0.1347
A3(LH)	A1&A2&!B1&!B2&!B3	0.0100	n/a	n/a	-0.1483
A3(LH)	!A1&A2&!B1&!B2&B3	0.0100	n/a	n/a	-0.1224
A3(LH)	!A1&A2&!B1&B2&!B3	0.0100	n/a	n/a	-0.1224
A3(LH)	!A1&A2&!B1&B2&B3	0.0100	n/a	n/a	-0.1224
A3(LH)	!A1&A2&B1&!B2&!B3	0.0100	n/a	n/a	-0.1224
A3(LH)	!A1&A2&B1&!B2&B3	0.0100	n/a	n/a	-0.1224
A3(LH)	!A1&A2&B1&B2&!B3	0.0100	n/a	n/a	-0.1224
A3(LH)	!A1&A2&B1&B2&B3	0.0100	n/a	n/a	-0.1224

continues on next page

Table 113 – continued from previous page

A3(LH)	A1&!A2&!B1&!B2&B3	0.0100	n/a	n/a	-0.1152
A3(LH)	A1&!A2&!B1&B2&!B3	0.0100	n/a	n/a	-0.1152
A3(LH)	A1&!A2&!B1&B2&B3	0.0100	n/a	n/a	-0.1152
A3(LH)	A1&!A2&B1&!B2&!B3	0.0100	n/a	n/a	-0.1152
A3(LH)	A1&!A2&B1&!B2&B3	0.0100	n/a	n/a	-0.1152
A3(LH)	A1&!A2&B1&B2&!B3	0.0100	n/a	n/a	-0.1152
A3(LH)	A1&!A2&B1&B2&B3	0.0100	n/a	n/a	-0.1152
A3(LH)	A1&A2&!B1&!B2&B3	0.0100	n/a	n/a	-0.1301
A3(LH)	A1&A2&!B1&B2&!B3	0.0100	n/a	n/a	-0.1301
A3(LH)	A1&A2&!B1&B2&B3	0.0100	n/a	n/a	-0.1301
A3(LH)	A1&A2&B1&!B2&!B3	0.0100	n/a	n/a	-0.1301
A3(LH)	A1&A2&B1&!B2&B3	0.0100	n/a	n/a	-0.1301
A3(LH)	A1&A2&B1&B2&!B3	0.0100	n/a	n/a	-0.1301
A3(LH)	A1&A2&B1&B2&B3	0.0100	n/a	n/a	-0.1301
A3(HL)	!A1&!A2&!B1&!B2&!B3	0.0100	n/a	n/a	0.1591
A3(HL)	!A1&A2&!B1&!B2&!B3	0.0100	n/a	n/a	0.1595
A3(HL)	A1&!A2&!B1&!B2&!B3	0.0100	n/a	n/a	0.1610
A3(HL)	A1&A2&!B1&!B2&!B3	0.0100	n/a	n/a	0.1597
A3(HL)	!A1&A2&!B1&!B2&B3	0.0100	n/a	n/a	0.1407
A3(HL)	!A1&A2&!B1&B2&!B3	0.0100	n/a	n/a	0.1407
A3(HL)	!A1&A2&!B1&B2&B3	0.0100	n/a	n/a	0.1407
A3(HL)	!A1&A2&B1&!B2&!B3	0.0100	n/a	n/a	0.1407
A3(HL)	!A1&A2&B1&!B2&B3	0.0100	n/a	n/a	0.1407
A3(HL)	!A1&A2&B1&B2&!B3	0.0100	n/a	n/a	0.1407
A3(HL)	!A1&A2&B1&B2&B3	0.0100	n/a	n/a	0.1406
A3(HL)	A1&!A2&!B1&!B2&B3	0.0100	n/a	n/a	0.1420
A3(HL)	A1&!A2&!B1&B2&!B3	0.0100	n/a	n/a	0.1420
A3(HL)	A1&!A2&!B1&B2&B3	0.0100	n/a	n/a	0.1420
A3(HL)	A1&!A2&B1&!B2&!B3	0.0100	n/a	n/a	0.1420
A3(HL)	A1&!A2&B1&!B2&B3	0.0100	n/a	n/a	0.1420
A3(HL)	A1&!A2&B1&B2&!B3	0.0100	n/a	n/a	0.1420
A3(HL)	A1&!A2&B1&B2&B3	0.0100	n/a	n/a	0.1420
A3(HL)	A1&A2&!B1&!B2&B3	0.0100	n/a	n/a	0.1407
A3(HL)	A1&A2&!B1&B2&!B3	0.0100	n/a	n/a	0.1407
A3(HL)	A1&A2&!B1&B2&B3	0.0100	n/a	n/a	0.1407
A3(HL)	A1&A2&B1&!B2&!B3	0.0100	n/a	n/a	0.1407
A3(HL)	A1&A2&B1&!B2&B3	0.0100	n/a	n/a	0.1407
A3(HL)	A1&A2&B1&B2&!B3	0.0100	n/a	n/a	0.1407
A3(HL)	A1&A2&B1&B2&B3	0.0100	n/a	n/a	0.1407
B2(HL)	!A1&!A2&!A3&!B1&!B3	0.0100	n/a	n/a	0.1504
B2(HL)	!A1&!A2&!A3&!B1&B3	0.0100	n/a	n/a	0.1409
B2(HL)	!A1&!A2&!A3&B1&!B3	0.0100	n/a	n/a	0.1402
B2(HL)	!A1&!A2&!A3&B1&B3	0.0100	n/a	n/a	0.0772
B2(HL)	!A1&!A2&A3&!B1&B3	0.0100	n/a	n/a	0.0996
B2(HL)	!A1&!A2&A3&B1&!B3	0.0100	n/a	n/a	0.1403
B2(HL)	!A1&!A2&A3&B1&B3	0.0100	n/a	n/a	0.0772
B2(HL)	!A1&A2&!A3&!B1&B3	0.0100	n/a	n/a	0.0996
B2(HL)	!A1&A2&!A3&B1&!B3	0.0100	n/a	n/a	0.1403
B2(HL)	!A1&A2&!A3&B1&B3	0.0100	n/a	n/a	0.0772
B2(HL)	!A1&A2&A3&!B1&B3	0.0100	n/a	n/a	0.0995
B2(HL)	!A1&A2&A3&B1&!B3	0.0100	n/a	n/a	0.1402
B2(HL)	!A1&A2&A3&B1&B3	0.0100	n/a	n/a	0.0772

continues on next page

Table 113 – continued from previous page

B2(HL)	A1&!A2&!A3&!B1&B3	0.0100	n/a	n/a	0.0996
B2(HL)	A1&!A2&!A3&B1&!B3	0.0100	n/a	n/a	0.1403
B2(HL)	A1&!A2&!A3&B1&B3	0.0100	n/a	n/a	0.0772
B2(HL)	A1&!A2&A3&!B1&B3	0.0100	n/a	n/a	0.0996
B2(HL)	A1&!A2&A3&B1&!B3	0.0100	n/a	n/a	0.1402
B2(HL)	A1&!A2&A3&B1&B3	0.0100	n/a	n/a	0.0772
B2(HL)	A1&A2&!A3&!B1&B3	0.0100	n/a	n/a	0.0996
B2(HL)	A1&A2&!A3&B1&!B3	0.0100	n/a	n/a	0.1402
B2(HL)	A1&A2&!A3&B1&B3	0.0100	n/a	n/a	0.0772
B2(HL)	A1&A2&A3&!B1&B3	0.0100	n/a	n/a	0.0995
B2(HL)	A1&A2&A3&B1&!B3	0.0100	n/a	n/a	0.1402
B2(HL)	A1&A2&A3&B1&B3	0.0100	n/a	n/a	0.0772
B3(LH)	!A1&!A2&!A3&!B1&!B2	0.0100	n/a	n/a	-0.1404
B3(LH)	!A1&!A2&!A3&!B1&B2	0.0100	n/a	n/a	-0.1361
B3(LH)	!A1&!A2&!A3&B1&!B2	0.0100	n/a	n/a	-0.1162
B3(LH)	!A1&!A2&!A3&B1&B2	0.0100	n/a	n/a	-0.1304
B3(LH)	!A1&!A2&A3&!B1&B2	0.0100	n/a	n/a	-0.1226
B3(LH)	!A1&!A2&A3&B1&!B2	0.0100	n/a	n/a	-0.1151
B3(LH)	!A1&!A2&A3&B1&B2	0.0100	n/a	n/a	-0.1304
B3(LH)	!A1&A2&!A3&!B1&B2	0.0100	n/a	n/a	-0.1226
B3(LH)	!A1&A2&!A3&B1&!B2	0.0100	n/a	n/a	-0.1151
B3(LH)	!A1&A2&!A3&B1&B2	0.0100	n/a	n/a	-0.1304
B3(LH)	!A1&A2&A3&!B1&B2	0.0100	n/a	n/a	-0.1226
B3(LH)	!A1&A2&A3&B1&!B2	0.0100	n/a	n/a	-0.1151
B3(LH)	!A1&A2&A3&B1&B2	0.0100	n/a	n/a	-0.1304
B3(LH)	A1&!A2&!A3&!B1&B2	0.0100	n/a	n/a	-0.1226
B3(LH)	A1&!A2&!A3&B1&!B2	0.0100	n/a	n/a	-0.1151
B3(LH)	A1&!A2&!A3&B1&B2	0.0100	n/a	n/a	-0.1304
B3(LH)	A1&!A2&A3&!B1&B2	0.0100	n/a	n/a	-0.1226
B3(LH)	A1&!A2&A3&B1&!B2	0.0100	n/a	n/a	-0.1151
B3(LH)	A1&!A2&A3&B1&B2	0.0100	n/a	n/a	-0.1304
B3(LH)	A1&A2&!A3&!B1&B2	0.0100	n/a	n/a	-0.1226
B3(LH)	A1&A2&!A3&B1&!B2	0.0100	n/a	n/a	-0.1151
B3(LH)	A1&A2&!A3&B1&B2	0.0100	n/a	n/a	-0.1304
B3(LH)	A1&A2&A3&!B1&B2	0.0100	n/a	n/a	-0.1226
B3(LH)	A1&A2&A3&B1&!B2	0.0100	n/a	n/a	-0.1151
B3(LH)	A1&A2&A3&B1&B2	0.0100	n/a	n/a	-0.1304
B3(HL)	!A1&!A2&!A3&!B1&!B2	0.0100	n/a	n/a	0.1500
B3(HL)	!A1&!A2&!A3&!B1&B2	0.0100	n/a	n/a	0.1408
B3(HL)	!A1&!A2&!A3&B1&!B2	0.0100	n/a	n/a	0.1400
B3(HL)	!A1&!A2&!A3&B1&B2	0.0100	n/a	n/a	0.1408
B3(HL)	!A1&!A2&A3&!B1&B2	0.0100	n/a	n/a	0.1407
B3(HL)	!A1&!A2&A3&B1&!B2	0.0100	n/a	n/a	0.1400
B3(HL)	!A1&!A2&A3&B1&B2	0.0100	n/a	n/a	0.1407
B3(HL)	!A1&A2&!A3&!B1&B2	0.0100	n/a	n/a	0.1407
B3(HL)	!A1&A2&!A3&B1&!B2	0.0100	n/a	n/a	0.1400
B3(HL)	!A1&A2&!A3&B1&B2	0.0100	n/a	n/a	0.1408
B3(HL)	!A1&A2&A3&!B1&B2	0.0100	n/a	n/a	0.1407
B3(HL)	!A1&A2&A3&B1&!B2	0.0100	n/a	n/a	0.1402
B3(HL)	!A1&A2&A3&B1&B2	0.0100	n/a	n/a	0.1407
B3(HL)	A1&!A2&!A3&!B1&B2	0.0100	n/a	n/a	0.1407
B3(HL)	A1&!A2&!A3&B1&!B2	0.0100	n/a	n/a	0.1400

continues on next page

Table 113 – continued from previous page

B3(HL)	A1&!A2&!A3&B1&B2	0.0100	n/a	n/a	0.1408
B3(HL)	A1&!A2&A3&!B1&B2	0.0100	n/a	n/a	0.1407
B3(HL)	A1&!A2&A3&B1&!B2	0.0100	n/a	n/a	0.1400
B3(HL)	A1&!A2&A3&B1&B2	0.0100	n/a	n/a	0.1407
B3(HL)	A1&A2&!A3&!B1&B2	0.0100	n/a	n/a	0.1407
B3(HL)	A1&A2&!A3&B1&!B2	0.0100	n/a	n/a	0.1400
B3(HL)	A1&A2&!A3&B1&B2	0.0100	n/a	n/a	0.1407
B3(HL)	A1&A2&A3&!B1&B2	0.0100	n/a	n/a	0.1407
B3(HL)	A1&A2&A3&B1&!B2	0.0100	n/a	n/a	0.1400
B3(HL)	A1&A2&A3&B1&B2	0.0100	n/a	n/a	0.1407
A2(LH)	!A1&!A3&!B1&!B2&!B3	0.0100	n/a	n/a	0.2556
A2(LH)	!A1&A3&!B1&!B2&!B3	0.0100	n/a	n/a	-0.1548
A2(LH)	A1&!A3&!B1&!B2&!B3	0.0100	n/a	n/a	-0.1463
A2(LH)	A1&A3&!B1&!B2&!B3	0.0100	n/a	n/a	-0.1387
A2(LH)	!A1&A3&!B1&!B2&B3	0.0100	n/a	n/a	-0.0440
A2(LH)	!A1&A3&!B1&B2&!B3	0.0100	n/a	n/a	-0.0440
A2(LH)	!A1&A3&!B1&B2&B3	0.0100	n/a	n/a	-0.0440
A2(LH)	!A1&A3&B1&!B2&!B3	0.0100	n/a	n/a	-0.0440
A2(LH)	!A1&A3&B1&!B2&B3	0.0100	n/a	n/a	-0.0440
A2(LH)	!A1&A3&B1&B2&!B3	0.0100	n/a	n/a	-0.0440
A2(LH)	!A1&A3&B1&B2&B3	0.0100	n/a	n/a	-0.0440
A2(LH)	A1&!A3&!B1&!B2&B3	0.0100	n/a	n/a	-0.1076
A2(LH)	A1&!A3&!B1&B2&!B3	0.0100	n/a	n/a	-0.1076
A2(LH)	A1&!A3&!B1&B2&B3	0.0100	n/a	n/a	-0.1076
A2(LH)	A1&!A3&B1&!B2&!B3	0.0100	n/a	n/a	-0.1076
A2(LH)	A1&!A3&B1&!B2&B3	0.0100	n/a	n/a	-0.1076
A2(LH)	A1&!A3&B1&B2&!B3	0.0100	n/a	n/a	-0.1076
A2(LH)	A1&!A3&B1&B2&B3	0.0100	n/a	n/a	-0.1076
A2(LH)	A1&A3&!B1&!B2&B3	0.0100	n/a	n/a	-0.0906
A2(LH)	A1&A3&!B1&B2&!B3	0.0100	n/a	n/a	-0.0906
A2(LH)	A1&A3&!B1&B2&B3	0.0100	n/a	n/a	-0.0906
A2(LH)	A1&A3&B1&!B2&!B3	0.0100	n/a	n/a	-0.0906
A2(LH)	A1&A3&B1&!B2&B3	0.0100	n/a	n/a	-0.0906
A2(LH)	A1&A3&B1&B2&!B3	0.0100	n/a	n/a	-0.0906
A2(LH)	A1&A3&B1&B2&B3	0.0100	n/a	n/a	-0.0906
A1(LH)	!A2&!A3&!B1&!B2&!B3	0.0100	n/a	n/a	0.2551
A1(LH)	!A2&A3&!B1&!B2&!B3	0.0100	n/a	n/a	-0.1346
A1(LH)	A2&!A3&!B1&!B2&!B3	0.0100	n/a	n/a	-0.1469
A1(LH)	A2&A3&!B1&!B2&!B3	0.0100	n/a	n/a	-0.1440
A1(LH)	!A2&A3&!B1&!B2&B3	0.0100	n/a	n/a	-0.0370
A1(LH)	!A2&A3&!B1&B2&!B3	0.0100	n/a	n/a	-0.0370
A1(LH)	!A2&A3&!B1&B2&B3	0.0100	n/a	n/a	-0.0370
A1(LH)	!A2&A3&B1&!B2&!B3	0.0100	n/a	n/a	-0.0370
A1(LH)	!A2&A3&B1&!B2&B3	0.0100	n/a	n/a	-0.0370
A1(LH)	!A2&A3&B1&B2&!B3	0.0100	n/a	n/a	-0.0370
A1(LH)	!A2&A3&B1&B2&B3	0.0100	n/a	n/a	-0.0370
A1(LH)	A2&!A3&!B1&!B2&B3	0.0100	n/a	n/a	-0.0360
A1(LH)	A2&!A3&!B1&B2&!B3	0.0100	n/a	n/a	-0.0360
A1(LH)	A2&!A3&!B1&B2&B3	0.0100	n/a	n/a	-0.0360
A1(LH)	A2&!A3&B1&!B2&!B3	0.0100	n/a	n/a	-0.0360
A1(LH)	A2&!A3&B1&!B2&B3	0.0100	n/a	n/a	-0.0360
A1(LH)	A2&!A3&B1&B2&!B3	0.0100	n/a	n/a	-0.0360

continues on next page

Table 113 – continued from previous page

A1(LH)	A2&!A3&B1&B2&B3	0.0100	n/a	n/a	-0.0360
A1(LH)	A2&A3&!B1&!B2&B3	0.0100	n/a	n/a	-0.0360
A1(LH)	A2&A3&!B1&B2&!B3	0.0100	n/a	n/a	-0.0360
A1(LH)	A2&A3&!B1&B2&B3	0.0100	n/a	n/a	-0.0360
A1(LH)	A2&A3&B1&!B2&!B3	0.0100	n/a	n/a	-0.0360
A1(LH)	A2&A3&B1&!B2&B3	0.0100	n/a	n/a	-0.0360
A1(LH)	A2&A3&B1&B2&!B3	0.0100	n/a	n/a	-0.0360
A1(LH)	A2&A3&B1&B2&B3	0.0100	n/a	n/a	-0.0360
A2(HL)	!A1&!A3&!B1&!B2&!B3	0.0100	n/a	n/a	0.1593
A2(HL)	!A1&A3&!B1&!B2&!B3	0.0100	n/a	n/a	0.1593
A2(HL)	A1&!A3&!B1&!B2&!B3	0.0100	n/a	n/a	0.1610
A2(HL)	A1&A3&!B1&!B2&!B3	0.0100	n/a	n/a	0.0967
A2(HL)	!A1&A3&!B1&!B2&B3	0.0100	n/a	n/a	0.1031
A2(HL)	!A1&A3&!B1&B2&!B3	0.0100	n/a	n/a	0.1031
A2(HL)	!A1&A3&!B1&B2&B3	0.0100	n/a	n/a	0.1031
A2(HL)	!A1&A3&B1&!B2&!B3	0.0100	n/a	n/a	0.1031
A2(HL)	!A1&A3&B1&!B2&B3	0.0100	n/a	n/a	0.1031
A2(HL)	!A1&A3&B1&B2&!B3	0.0100	n/a	n/a	0.1031
A2(HL)	!A1&A3&B1&B2&B3	0.0100	n/a	n/a	0.1031
A2(HL)	A1&!A3&!B1&!B2&B3	0.0100	n/a	n/a	0.1423
A2(HL)	A1&!A3&!B1&B2&!B3	0.0100	n/a	n/a	0.1423
A2(HL)	A1&!A3&!B1&B2&B3	0.0100	n/a	n/a	0.1423
A2(HL)	A1&!A3&B1&!B2&!B3	0.0100	n/a	n/a	0.1423
A2(HL)	A1&!A3&B1&!B2&B3	0.0100	n/a	n/a	0.1423
A2(HL)	A1&!A3&B1&B2&!B3	0.0100	n/a	n/a	0.1423
A2(HL)	A1&!A3&B1&B2&B3	0.0100	n/a	n/a	0.1423
A2(HL)	A1&A3&!B1&!B2&B3	0.0100	n/a	n/a	0.0774
A2(HL)	A1&A3&!B1&B2&!B3	0.0100	n/a	n/a	0.0774
A2(HL)	A1&A3&!B1&B2&B3	0.0100	n/a	n/a	0.0774
A2(HL)	A1&A3&B1&!B2&!B3	0.0100	n/a	n/a	0.0774
A2(HL)	A1&A3&B1&!B2&B3	0.0100	n/a	n/a	0.0774
A2(HL)	A1&A3&B1&B2&!B3	0.0100	n/a	n/a	0.0774
A2(HL)	A1&A3&B1&B2&B3	0.0100	n/a	n/a	0.0773
B1(HL)	!A1&!A2&!A3&!B2&!B3	0.0100	n/a	n/a	0.1507
B1(HL)	!A1&!A2&!A3&!B2&B3	0.0100	n/a	n/a	0.1407
B1(HL)	!A1&!A2&!A3&B2&!B3	0.0100	n/a	n/a	0.1406
B1(HL)	!A1&!A2&!A3&B2&B3	0.0100	n/a	n/a	0.1407
B1(HL)	!A1&!A2&A3&!B2&B3	0.0100	n/a	n/a	0.2131
B1(HL)	!A1&!A2&A3&B2&!B3	0.0100	n/a	n/a	0.1149
B1(HL)	!A1&!A2&A3&B2&B3	0.0100	n/a	n/a	0.1149
B1(HL)	!A1&A2&!A3&!B2&B3	0.0100	n/a	n/a	0.2131
B1(HL)	!A1&A2&!A3&B2&!B3	0.0100	n/a	n/a	0.1149
B1(HL)	!A1&A2&!A3&B2&B3	0.0100	n/a	n/a	0.1149
B1(HL)	!A1&A2&A3&!B2&B3	0.0100	n/a	n/a	0.2131
B1(HL)	!A1&A2&A3&B2&!B3	0.0100	n/a	n/a	0.1149
B1(HL)	!A1&A2&A3&B2&B3	0.0100	n/a	n/a	0.1149
B1(HL)	A1&!A2&!A3&!B2&B3	0.0100	n/a	n/a	0.2131
B1(HL)	A1&!A2&!A3&B2&!B3	0.0100	n/a	n/a	0.1149
B1(HL)	A1&!A2&!A3&B2&B3	0.0100	n/a	n/a	0.1149
B1(HL)	A1&!A2&A3&!B2&B3	0.0100	n/a	n/a	0.2131
B1(HL)	A1&!A2&A3&B2&!B3	0.0100	n/a	n/a	0.1149
B1(HL)	A1&!A2&A3&B2&B3	0.0100	n/a	n/a	0.1149

continues on next page

Table 113 – continued from previous page

B1(HL)	A1&A2&!A3&!B2&B3	0.0100	n/a	n/a	0.2131
B1(HL)	A1&A2&!A3&B2&!B3	0.0100	n/a	n/a	0.1149
B1(HL)	A1&A2&!A3&B2&B3	0.0100	n/a	n/a	0.1149
B1(HL)	A1&A2&A3&!B2&B3	0.0100	n/a	n/a	0.2132
B1(HL)	A1&A2&A3&B2&!B3	0.0100	n/a	n/a	0.1149
B1(HL)	A1&A2&A3&B2&B3	0.0100	n/a	n/a	0.1149
A1(HL)	!A2&!A3&!B1&!B2&!B3	0.0100	n/a	n/a	0.1596
A1(HL)	!A2&A3&!B1&!B2&!B3	0.0100	n/a	n/a	0.1613
A1(HL)	A2&!A3&!B1&!B2&!B3	0.0100	n/a	n/a	0.1613
A1(HL)	A2&A3&!B1&!B2&!B3	0.0100	n/a	n/a	0.1614
A1(HL)	!A2&A3&!B1&!B2&B3	0.0100	n/a	n/a	0.2134
A1(HL)	!A2&A3&!B1&B2&!B3	0.0100	n/a	n/a	0.2134
A1(HL)	!A2&A3&!B1&B2&B3	0.0100	n/a	n/a	0.2134
A1(HL)	!A2&A3&B1&!B2&!B3	0.0100	n/a	n/a	0.2134
A1(HL)	!A2&A3&B1&!B2&B3	0.0100	n/a	n/a	0.2134
A1(HL)	!A2&A3&B1&B2&!B3	0.0100	n/a	n/a	0.2134
A1(HL)	!A2&A3&B1&B2&B3	0.0100	n/a	n/a	0.2133
A1(HL)	A2&!A3&!B1&!B2&B3	0.0100	n/a	n/a	0.1119
A1(HL)	A2&!A3&!B1&B2&!B3	0.0100	n/a	n/a	0.1119
A1(HL)	A2&!A3&!B1&B2&B3	0.0100	n/a	n/a	0.1118
A1(HL)	A2&!A3&B1&!B2&!B3	0.0100	n/a	n/a	0.1119
A1(HL)	A2&!A3&B1&!B2&B3	0.0100	n/a	n/a	0.1118
A1(HL)	A2&!A3&B1&B2&!B3	0.0100	n/a	n/a	0.1118
A1(HL)	A2&!A3&B1&B2&B3	0.0100	n/a	n/a	0.1118
A1(HL)	A2&A3&!B1&!B2&B3	0.0100	n/a	n/a	0.1119
A1(HL)	A2&A3&!B1&B2&!B3	0.0100	n/a	n/a	0.1119
A1(HL)	A2&A3&!B1&B2&B3	0.0100	n/a	n/a	0.1118
A1(HL)	A2&A3&B1&!B2&!B3	0.0100	n/a	n/a	0.1119
A1(HL)	A2&A3&B1&!B2&B3	0.0100	n/a	n/a	0.1118
A1(HL)	A2&A3&B1&B2&!B3	0.0100	n/a	n/a	0.1118
A1(HL)	A2&A3&B1&B2&B3	0.0100	n/a	n/a	0.1118
B1(LH)	!A1&!A2&!A3&!B2&!B3	0.0100	n/a	n/a	-0.1415
B1(LH)	!A1&!A2&!A3&!B2&B3	0.0100	n/a	n/a	-0.1166
B1(LH)	!A1&!A2&!A3&B2&!B3	0.0100	n/a	n/a	-0.1290
B1(LH)	!A1&!A2&!A3&B2&B3	0.0100	n/a	n/a	-0.1261
B1(LH)	!A1&!A2&A3&!B2&B3	0.0100	n/a	n/a	-0.0370
B1(LH)	!A1&!A2&A3&B2&!B3	0.0100	n/a	n/a	-0.0362
B1(LH)	!A1&!A2&A3&B2&B3	0.0100	n/a	n/a	-0.0362
B1(LH)	!A1&A2&!A3&!B2&B3	0.0100	n/a	n/a	-0.0370
B1(LH)	!A1&A2&!A3&B2&!B3	0.0100	n/a	n/a	-0.0362
B1(LH)	!A1&A2&!A3&B2&B3	0.0100	n/a	n/a	-0.0362
B1(LH)	!A1&A2&A3&!B2&B3	0.0100	n/a	n/a	-0.0370
B1(LH)	!A1&A2&A3&B2&!B3	0.0100	n/a	n/a	-0.0362
B1(LH)	!A1&A2&A3&B2&B3	0.0100	n/a	n/a	-0.0362
B1(LH)	A1&!A2&!A3&!B2&B3	0.0100	n/a	n/a	-0.0370
B1(LH)	A1&!A2&!A3&B2&!B3	0.0100	n/a	n/a	-0.0362
B1(LH)	A1&!A2&!A3&B2&B3	0.0100	n/a	n/a	-0.0362
B1(LH)	A1&!A2&A3&!B2&B3	0.0100	n/a	n/a	-0.0370
B1(LH)	A1&!A2&A3&B2&!B3	0.0100	n/a	n/a	-0.0362
B1(LH)	A1&!A2&A3&B2&B3	0.0100	n/a	n/a	-0.0362
B1(LH)	A1&A2&!A3&!B2&B3	0.0100	n/a	n/a	-0.0370
B1(LH)	A1&A2&!A3&B2&!B3	0.0100	n/a	n/a	-0.0362

continues on next page

Table 113 – continued from previous page

B1(LH)	A1&A2&!A3&B2&B3	0.0100	n/a	n/a	-0.0362
B1(LH)	A1&A2&A3&!B2&B3	0.0100	n/a	n/a	-0.0370
B1(LH)	A1&A2&A3&B2&!B3	0.0100	n/a	n/a	-0.0362
B1(LH)	A1&A2&A3&B2&B3	0.0100	n/a	n/a	-0.0362

LEAKAGE POWER

When Condition	Power (nW)
!A1&!A2&!A3&!B1&!B2&!B3	0.3526
!A1&!A2&!A3&!B1&!B2&B3	0.3554
!A1&!A2&!A3&!B1&B2&!B3	0.3554
!A1&!A2&!A3&!B1&B2&B3	0.3554
!A1&!A2&!A3&B1&!B2&!B3	0.3554
!A1&!A2&!A3&B1&!B2&B3	0.3550
!A1&!A2&!A3&B1&B2&!B3	0.3549
!A1&!A2&!A3&B1&B2&B3	0.3549
!A1&!A2&A3&!B1&!B2&!B3	0.8313
!A1&A2&!A3&!B1&!B2&!B3	0.8313
!A1&A2&A3&!B1&!B2&!B3	0.8337
A1&!A2&!A3&!B1&!B2&!B3	0.8313
A1&!A2&A3&!B1&!B2&!B3	0.8344
A1&A2&!A3&!B1&!B2&!B3	0.8345
A1&A2&A3&!B1&!B2&!B3	0.8359
!A1&!A2&A3&!B1&!B2&B3	0.8297
!A1&!A2&A3&!B1&B2&!B3	0.6883
!A1&!A2&A3&!B1&B2&B3	0.6883
!A1&!A2&A3&B1&!B2&!B3	0.5454
!A1&!A2&A3&B1&!B2&B3	0.5450
!A1&!A2&A3&B1&B2&!B3	0.5450
!A1&!A2&A3&B1&B2&B3	0.5450
!A1&A2&!A3&!B1&!B2&B3	0.6882
!A1&A2&!A3&!B1&B2&!B3	0.5467
!A1&A2&!A3&!B1&B2&B3	0.5467
!A1&A2&!A3&B1&!B2&!B3	0.4039
!A1&A2&!A3&B1&!B2&B3	0.4035
!A1&A2&!A3&B1&B2&!B3	0.4035
!A1&A2&!A3&B1&B2&B3	0.4035
!A1&A2&A3&!B1&!B2&B3	0.6882
!A1&A2&A3&!B1&B2&!B3	0.5467
!A1&A2&A3&!B1&B2&B3	0.5467
!A1&A2&A3&B1&!B2&!B3	0.4039
!A1&A2&A3&B1&!B2&B3	0.4035
!A1&A2&A3&B1&B2&!B3	0.4035
!A1&A2&A3&B1&B2&B3	0.4035
A1&!A2&!A3&!B1&!B2&B3	0.5456
A1&!A2&!A3&!B1&B2&!B3	0.4042
A1&!A2&!A3&!B1&B2&B3	0.4042

continues on next page

Table 114 – continued from previous page

A1&!A2&!A3&B1&!B2&!B3	0.2614
A1&!A2&!A3&B1&!B2&B3	0.2609
A1&!A2&!A3&B1&B2&!B3	0.2609
A1&!A2&!A3&B1&B2&B3	0.2609
A1&!A2&A3&!B1&!B2&B3	0.5464
A1&!A2&A3&!B1&B2&!B3	0.4049
A1&!A2&A3&!B1&B2&B3	0.4049
A1&!A2&A3&B1&!B2&!B3	0.2621
A1&!A2&A3&B1&!B2&B3	0.2617
A1&!A2&A3&B1&B2&!B3	0.2616
A1&!A2&A3&B1&B2&B3	0.2616
A1&A2&!A3&!B1&!B2&B3	0.5464
A1&A2&!A3&!B1&B2&!B3	0.4050
A1&A2&!A3&!B1&B2&B3	0.4050
A1&A2&!A3&B1&!B2&!B3	0.2621
A1&A2&!A3&B1&!B2&B3	0.2617
A1&A2&!A3&B1&B2&!B3	0.2617
A1&A2&!A3&B1&B2&B3	0.2617
A1&A2&A3&!B1&!B2&B3	0.5464
A1&A2&A3&!B1&B2&!B3	0.4050
A1&A2&A3&!B1&B2&B3	0.4050
A1&A2&A3&B1&!B2&!B3	0.2621
A1&A2&A3&B1&!B2&B3	0.2617
A1&A2&A3&B1&B2&!B3	0.2617
A1&A2&A3&B1&B2&B3	0.2617

gf180mcu_fd_sc_mcu7t5v0__or2_1

gf180mcu_fd_sc_mcu7t5v0__or2_1 symbol

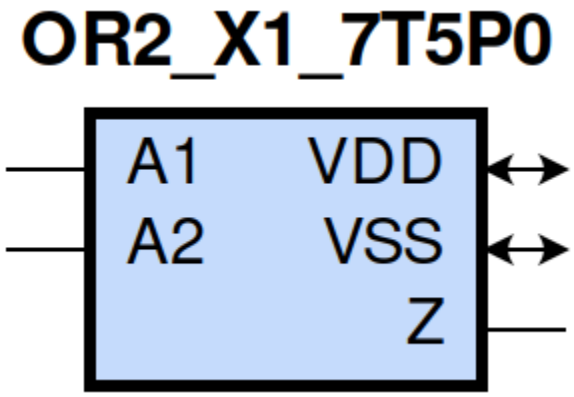

gf180mcu_fd_sc_mcu7t5v0__or2_1 schematic

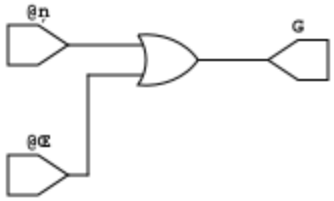

gf180mcu_fd_sc_mcu7t5v0__or2_1 layout

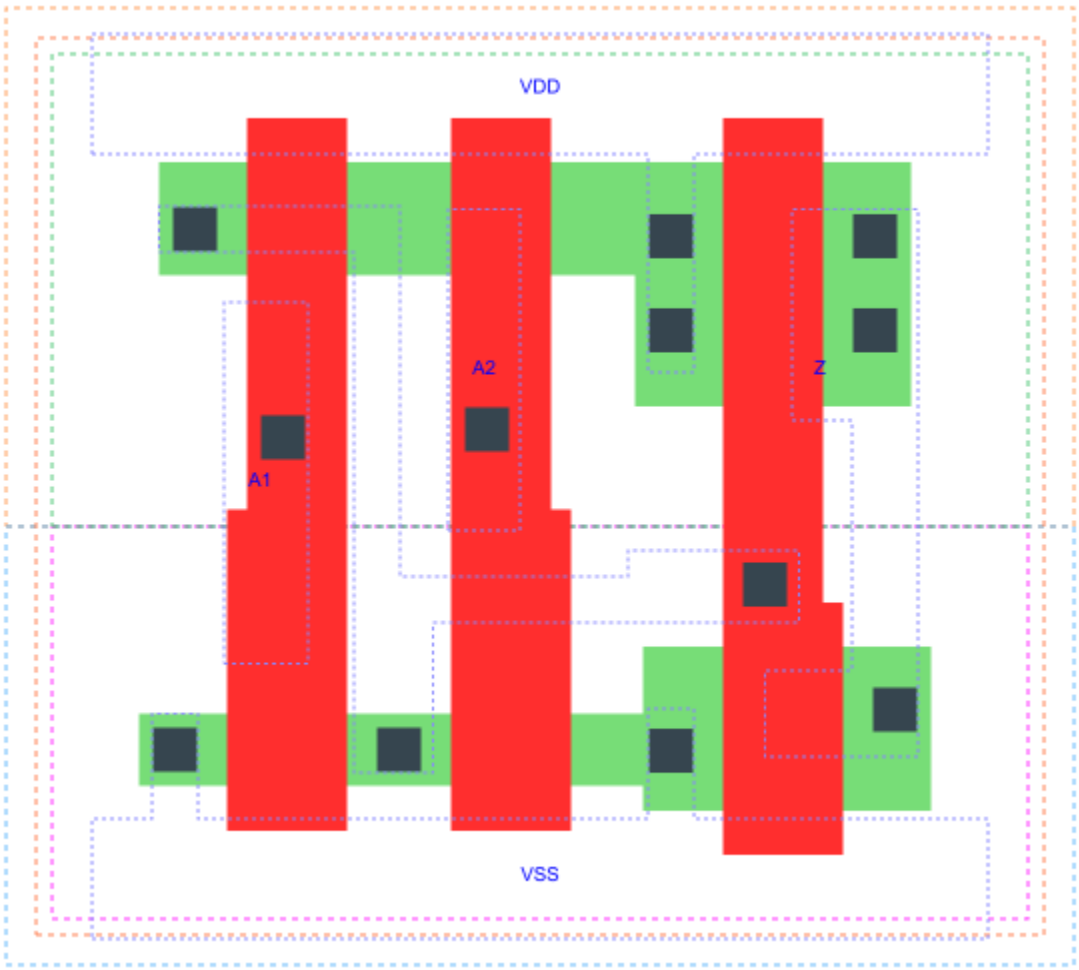

OR2_X1 is a 2-input OR(A1,A2), 1X drive strength

Attributes

Attribute	Value
area	17.561600 μm^2

OUTPUT FUNCTIONS

Output Pin	Function
Z	(A1|A2)

TRUTH TABLE FOR Z

A1	A2	Z
1	?	1
?	1	1
0	0	0

FUNCTIONAL SCHEMATIC

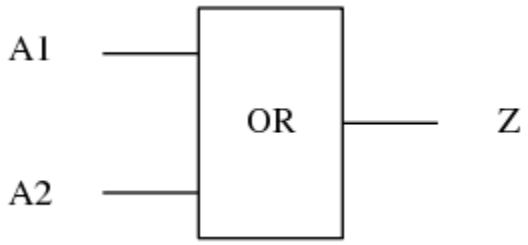

PIN CAPACITANCE (pf)

Pin	Type	Capacitance (pf)
A1	input	0.0029
A2	input	0.0028

DELAY AND OUTPUT TRANSITION TIME corresponding to min slew and load

Input Pin	Output	When Condition	Tin (ns)	Out Load (pf)	Delay (ns)	Tout (ns)
A1(LH)	Z(LH)	!A2	0.0100	0.0010	0.1693	0.0412
A1(HL)	Z(HL)	!A2	0.0100	0.0010	0.3122	0.0615
A2(HL)	Z(HL)	!A1	0.0100	0.0010	0.3392	0.0614
A2(LH)	Z(LH)	!A1	0.0100	0.0010	0.1869	0.0422

DYNAMIC ENERGY

Input Pin	When Condition	Tin (ns)	Output	Out Load (pf)	Energy (uW/MHz)
A2	!A1	0.0100	Z(HL)	0.0010	0.2462
A2	!A1	0.0100	Z(LH)	0.0010	0.1241
A1	!A2	0.0100	Z(LH)	0.0010	0.1103
A1	!A2	0.0100	Z(HL)	0.0010	0.2323
A2(LH)	A1	0.0100	n/a	n/a	-0.0151
A1(LH)	A2	0.0100	n/a	n/a	-0.0051
A1(HL)	A2	0.0100	n/a	n/a	0.0135
A2(HL)	A1	0.0100	n/a	n/a	0.0181

LEAKAGE POWER

When Condition	Power (nW)
!A1&!A2	0.1317
!A1&A2	0.1376
A1&!A2	0.1015
A1&A2	0.1015

gf180mcu_fd_sc_mcu7t5v0__or2_2

gf180mcu_fd_sc_mcu7t5v0__or2_2 symbol

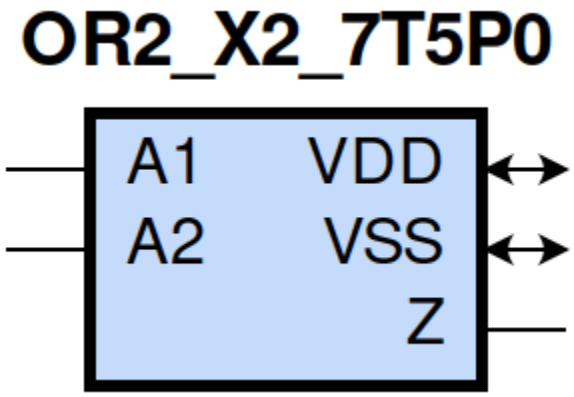

gf180mcu_fd_sc_mcu7t5v0__or2_2 schematic

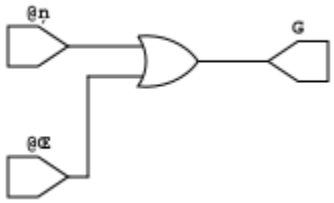

gf180mcu_fd_sc_mcu7t5v0__or2_2 layout

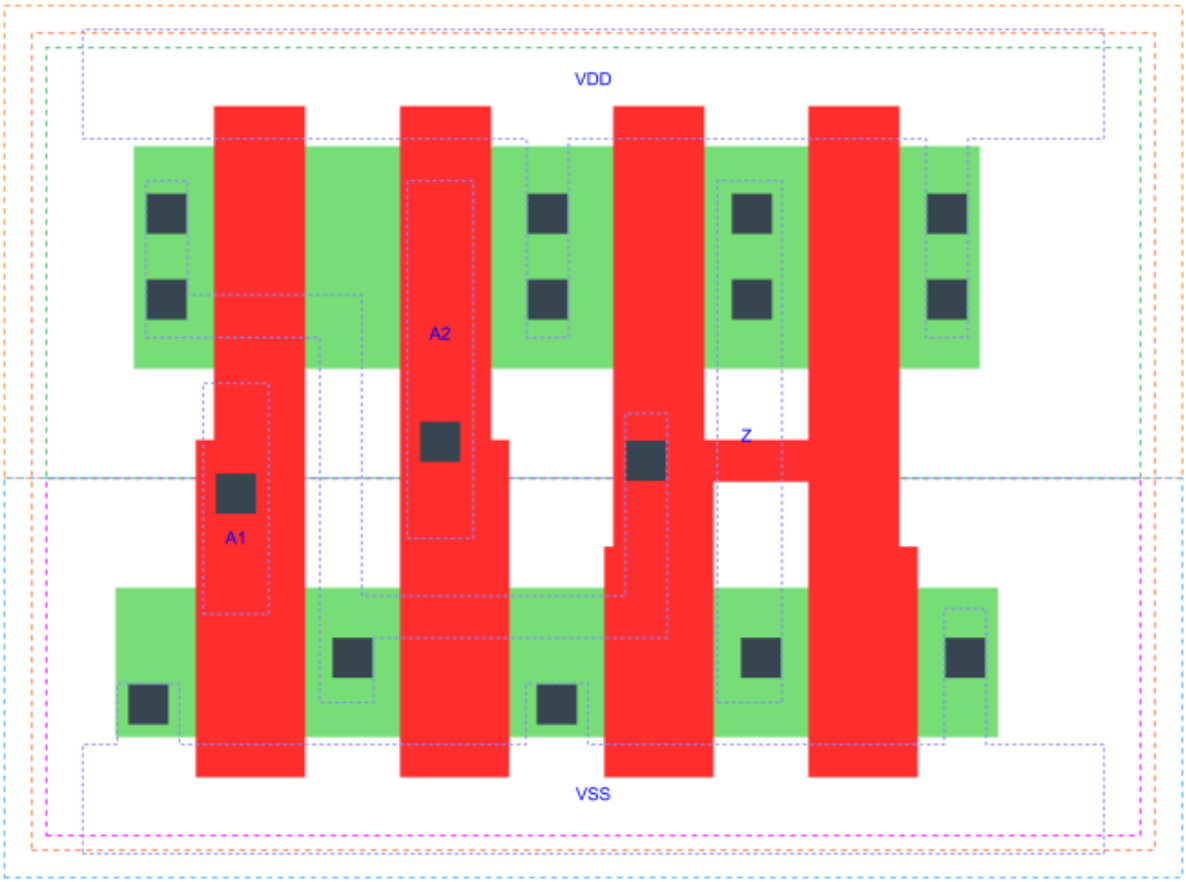

OR2_X2 is a 2-input OR(A1,A2), 2X drive strength

Attributes

Attribute	Value
area	21.952000 μm^2

OUTPUT FUNCTIONS

Output Pin	Function
Z	(A1|A2)

TRUTH TABLE FOR Z

A1	A2	Z
1	?	1
?	1	1
0	0	0

FUNCTIONAL SCHEMATIC

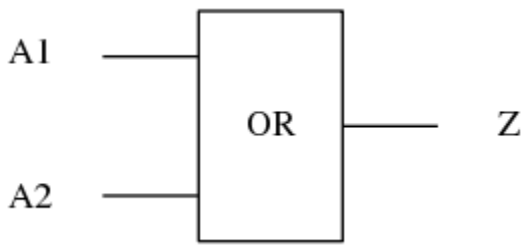

PIN CAPACITANCE (pf)

Pin	Type	Capacitance (pf)
A1	input	0.0048
A2	input	0.0048

DELAY AND OUTPUT TRANSITION TIME corresponding to min slew and load

Input Pin	Output	When Condition	Tin (ns)	Out Load (pf)	Delay (ns)	Tout (ns)
A1(LH)	Z(LH)	!A2	0.0100	0.0010	0.1372	0.0278
A1(HL)	Z(HL)	!A2	0.0100	0.0010	0.2463	0.0435
A2(HL)	Z(HL)	!A1	0.0100	0.0010	0.2709	0.0435
A2(LH)	Z(LH)	!A1	0.0100	0.0010	0.1551	0.0287

DYNAMIC ENERGY

Input Pin	When Condition	Tin (ns)	Output	Out Load (pf)	Energy (uW/MHz)
A2	!A1	0.0100	Z(HL)	0.0010	0.4223
A2	!A1	0.0100	Z(LH)	0.0010	0.2056
A1	!A2	0.0100	Z(LH)	0.0010	0.1785
A1	!A2	0.0100	Z(HL)	0.0010	0.3922
A2(LH)	A1	0.0100	n/a	n/a	-0.0327
A1(LH)	A2	0.0100	n/a	n/a	-0.0110
A1(HL)	A2	0.0100	n/a	n/a	0.0262
A2(HL)	A1	0.0100	n/a	n/a	0.0392

LEAKAGE POWER

When Condition	Power (nW)
!A1&!A2	0.1539
!A1&A2	0.1630
A1&!A2	0.1274
A1&A2	0.1274

gf180mcu_fd_sc_mcu7t5v0__or2_4

gf180mcu_fd_sc_mcu7t5v0__or2_4 symbol

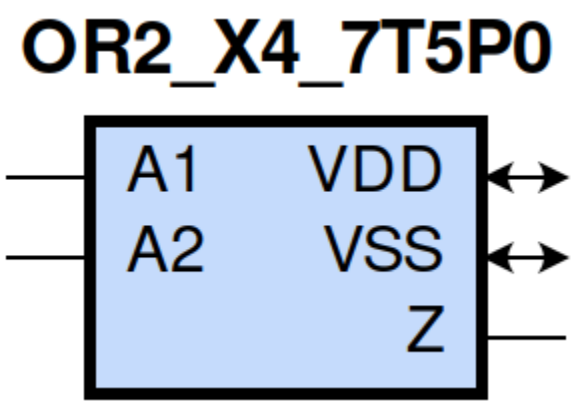

gf180mcu_fd_sc_mcu7t5v0__or2_4 schematic

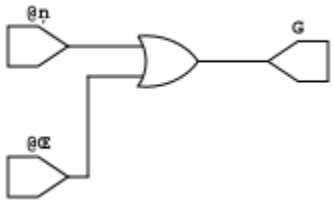

gf180mcu_fd_sc_mcu7t5v0__or2_4 layout

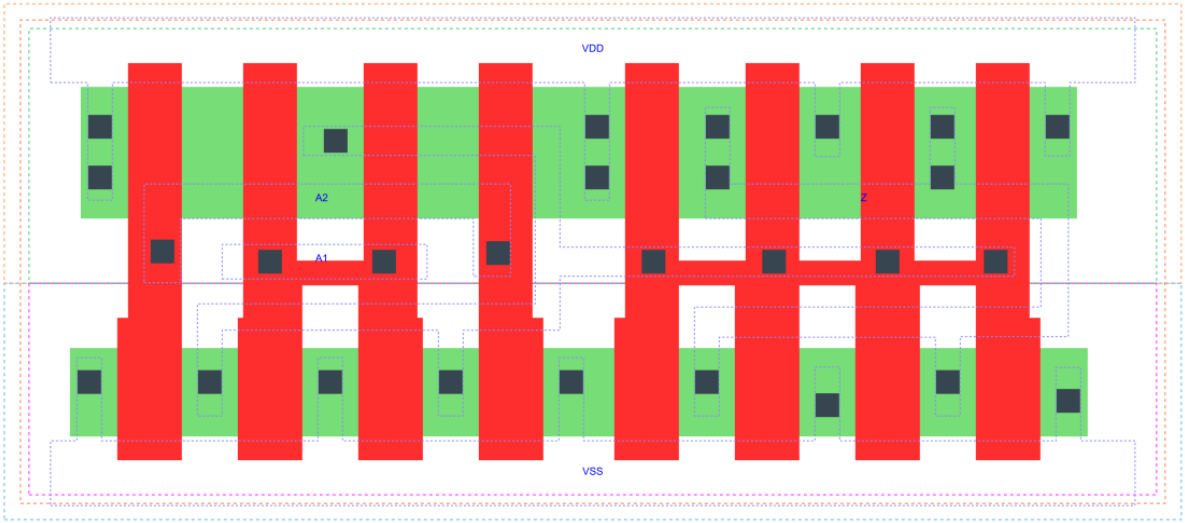

OR2_X4 is a 2-input OR(A1,A2), 4X drive strength

Attributes

Attribute	Value
area	39.513600 μm^2

OUTPUT FUNCTIONS

Output Pin	Function
Z	(A1|A2)

TRUTH TABLE FOR Z

A1	A2	Z
1	?	1
?	1	1
0	0	0

FUNCTIONAL SCHEMATIC

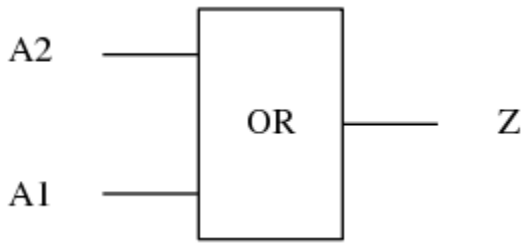

PIN CAPACITANCE (pf)

Pin	Type	Capacitance (pf)
A2	input	0.0097
A1	input	0.0094

DELAY AND OUTPUT TRANSITION TIME corresponding to min slew and load

Input Pin	Output	When Condition	Tin (ns)	Out Load (pf)	Delay (ns)	Tout (ns)
A2(HL)	Z(HL)	!A1	0.0100	0.0010	0.2654	0.0421
A2(LH)	Z(LH)	!A1	0.0100	0.0010	0.1516	0.0283
A1(LH)	Z(LH)	!A2	0.0100	0.0010	0.1338	0.0272
A1(HL)	Z(HL)	!A2	0.0100	0.0010	0.2401	0.0422

DYNAMIC ENERGY

Input Pin	When Condition	Tin (ns)	Output	Out Load (pf)	Energy (uW/MHz)
A2	!A1	0.0100	Z(HL)	0.0010	0.8381
A2	!A1	0.0100	Z(LH)	0.0010	0.4130
A1	!A2	0.0100	Z(LH)	0.0010	0.3568
A1	!A2	0.0100	Z(HL)	0.0010	0.7777
A2(LH)	A1	0.0100	n/a	n/a	-0.0654
A1(LH)	A2	0.0100	n/a	n/a	-0.0220
A1(HL)	A2	0.0100	n/a	n/a	0.0544
A2(HL)	A1	0.0100	n/a	n/a	0.0785

LEAKAGE POWER

When Condition	Power (nW)
!A1&!A2	0.2578
!A1&A2	0.2760
A1&!A2	0.2048
A1&A2	0.2048

gf180mcu_fd_sc_mcu7t5v0__or3_1

gf180mcu_fd_sc_mcu7t5v0__or3_1 symbol

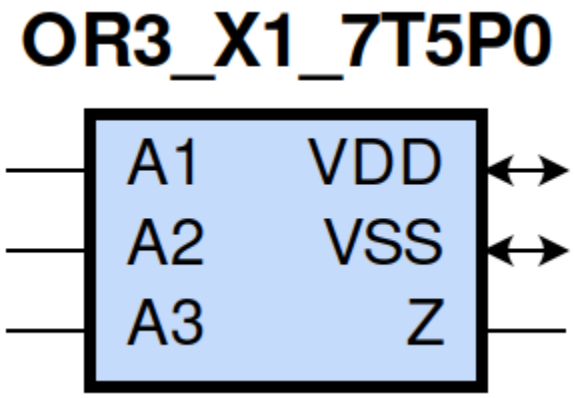

gf180mcu_fd_sc_mcu7t5v0__or3_1 schematic

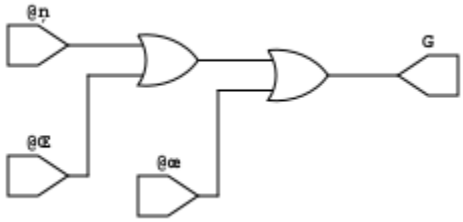

gf180mcu_fd_sc_mcu7t5v0__or3_1 layout

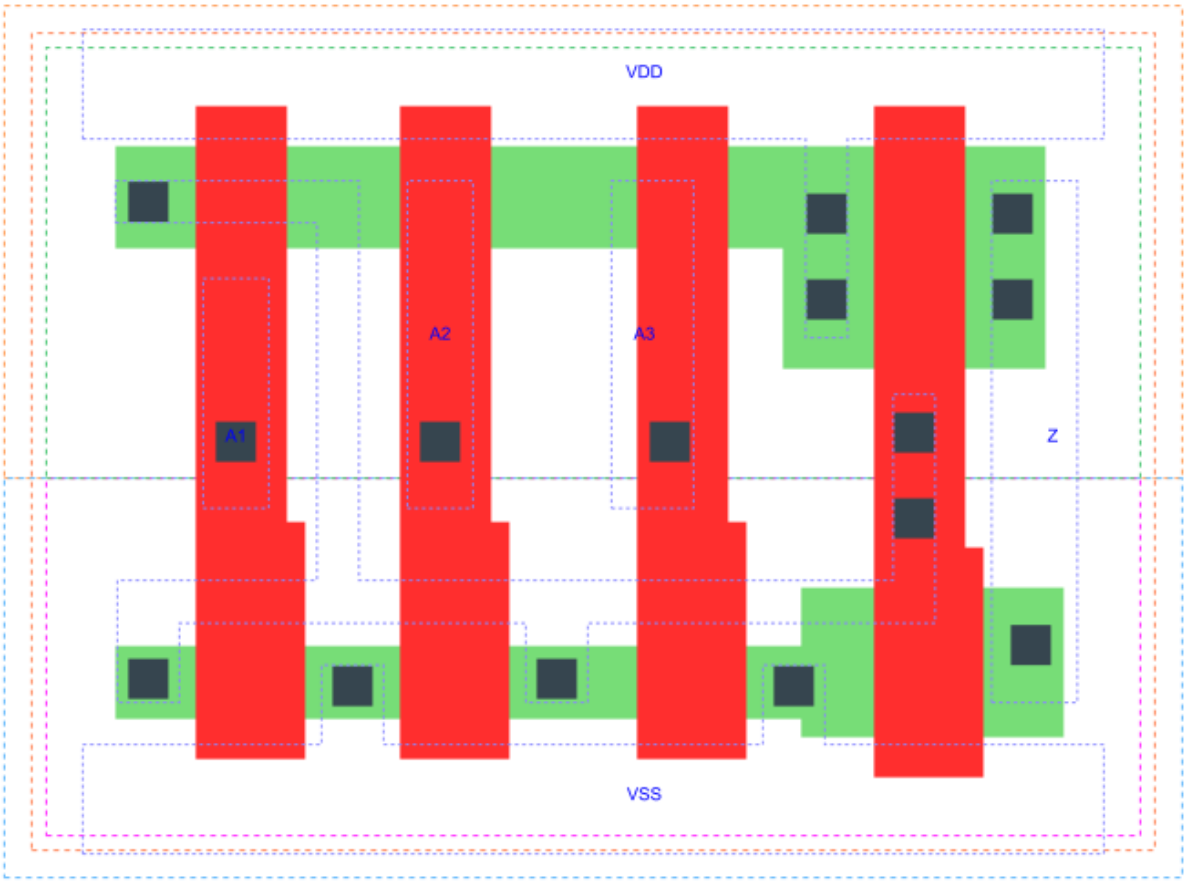

OR3_X1 is a 3-input OR(A1,A2,A3), 1X drive strength

Attributes

Attribute	Value
area	21.952000 μm^2

OUTPUT FUNCTIONS

Output Pin	Function
Z	(A1|A2|A3)

TRUTH TABLE FOR Z

A1	A2	A3	Z
1	?	?	1
?	1	?	1
?	?	1	1
0	0	0	0

FUNCTIONAL SCHEMATIC

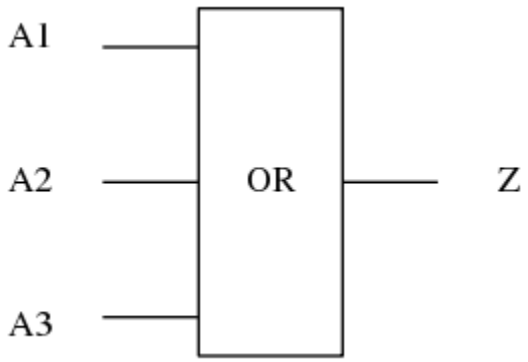

PIN CAPACITANCE (pf)

Pin	Type	Capacitance (pf)
A1	input	0.0029
A2	input	0.0028
A3	input	0.0028

DELAY AND OUTPUT TRANSITION TIME corresponding to min slew and load

Input Pin	Output	When Condition	Tin (ns)	Out Load (pf)	Delay (ns)	Tout (ns)
A1(LH)	Z(LH)	!A2&!A3	0.0100	0.0010	0.1766	0.0416
A1(HL)	Z(HL)	!A2&!A3	0.0100	0.0010	0.4676	0.0870
A2(HL)	Z(HL)	!A1&!A3	0.0100	0.0010	0.5323	0.0869
A2(LH)	Z(LH)	!A1&!A3	0.0100	0.0010	0.1947	0.0425
A3(LH)	Z(LH)	!A1&!A2	0.0100	0.0010	0.2039	0.0441
A3(HL)	Z(HL)	!A1&!A2	0.0100	0.0010	0.5629	0.0870

DYNAMIC ENERGY

Input Pin	When Condition	Tin (ns)	Output	Out Load (pf)	Energy (uW/MHz)
A3	!A1&!A2	0.0100	Z(LH)	0.0010	0.1434
A2	!A1&!A3	0.0100	Z(HL)	0.0010	0.3352
A2	!A1&!A3	0.0100	Z(LH)	0.0010	0.1263
A1	!A2&!A3	0.0100	Z(LH)	0.0010	0.1103
A3	!A1&!A2	0.0100	Z(HL)	0.0010	0.3488
A1	!A2&!A3	0.0100	Z(HL)	0.0010	0.3212
A3(LH)	!A1&A2	0.0100	n/a	n/a	-0.0155
A3(LH)	A1&!A2	0.0100	n/a	n/a	-0.0153
A3(LH)	A1&A2	0.0100	n/a	n/a	-0.0170
A2(LH)	!A1&A3	0.0100	n/a	n/a	-0.0056
A2(LH)	A1&!A3	0.0100	n/a	n/a	-0.0149
A2(LH)	A1&A3	0.0100	n/a	n/a	-0.0131
A1(LH)	!A2&A3	0.0100	n/a	n/a	-0.0051
A1(LH)	A2&!A3	0.0100	n/a	n/a	-0.0051
A1(LH)	A2&A3	0.0100	n/a	n/a	-0.0051
A3(HL)	!A1&A2	0.0100	n/a	n/a	0.0179
A3(HL)	A1&!A2	0.0100	n/a	n/a	0.0179
A3(HL)	A1&A2	0.0100	n/a	n/a	0.0179
A1(HL)	!A2&A3	0.0100	n/a	n/a	0.0300
A1(HL)	A2&!A3	0.0100	n/a	n/a	0.0145
A1(HL)	A2&A3	0.0100	n/a	n/a	0.0145
A2(HL)	!A1&A3	0.0100	n/a	n/a	0.0157
A2(HL)	A1&!A3	0.0100	n/a	n/a	0.0180
A2(HL)	A1&A3	0.0100	n/a	n/a	0.0116

LEAKAGE POWER

When Condition	Power (nW)
!A1&!A2&!A3	0.1556
!A1&!A2&A3	0.1732
!A1&A2&!A3	0.1376
!A1&A2&A3	0.1376
A1&!A2&!A3	0.1015
A1&!A2&A3	0.1015
A1&A2&!A3	0.1015
A1&A2&A3	0.1015

gf180mcu_fd_sc_mcu7t5v0__or3_2

gf180mcu_fd_sc_mcu7t5v0__or3_2 symbol

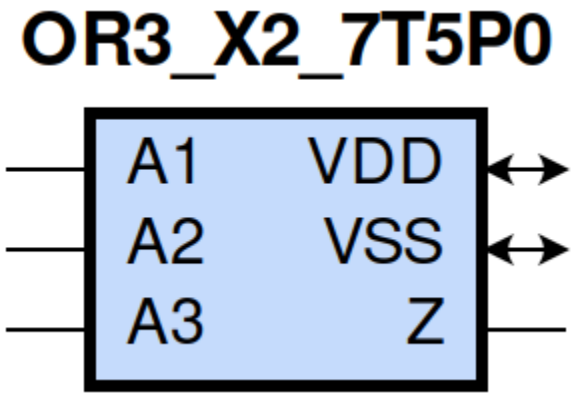

gf180mcu_fd_sc_mcu7t5v0__or3_2 schematic

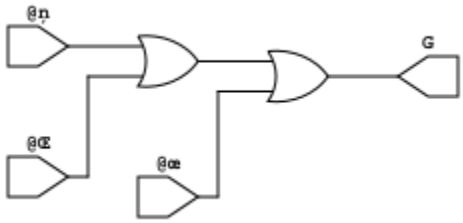

gf180mcu_fd_sc_mcu7t5v0__or3_2 layout

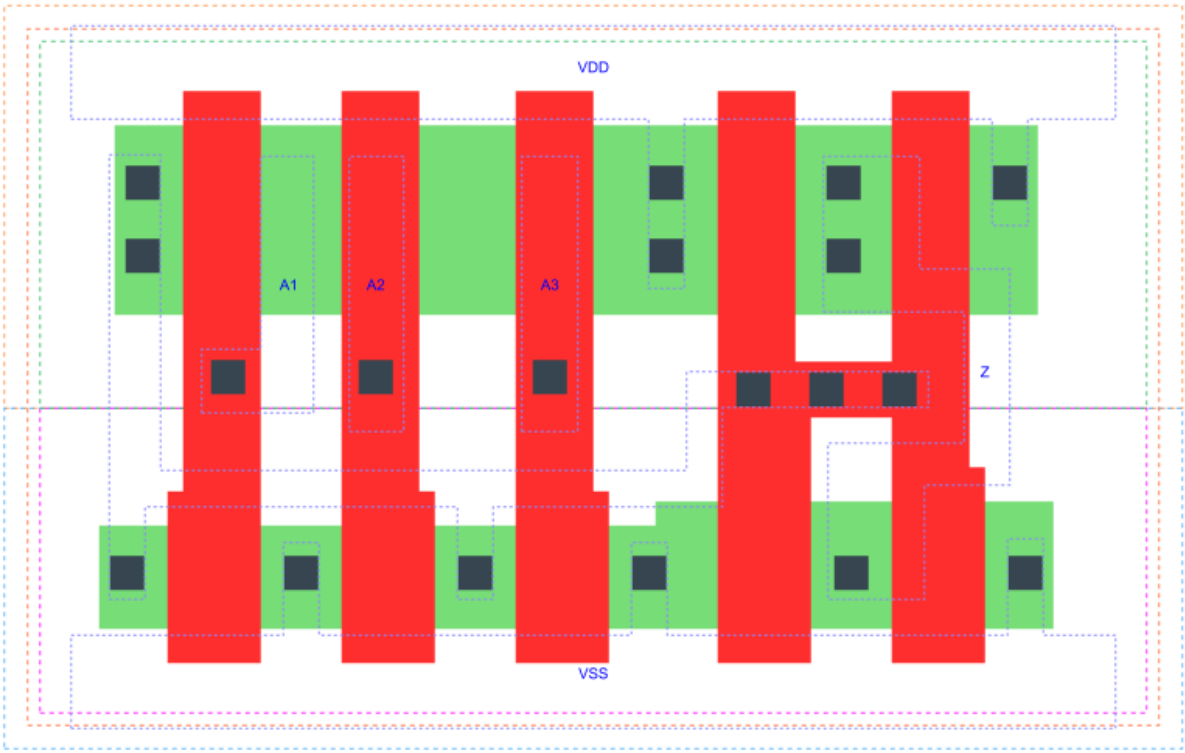

OR3_X2 is a 3-input OR(A1,A2,A3), 2X drive strength

Attributes

Attribute	Value
area	26.342400 μm^2

OUTPUT FUNCTIONS

Output Pin	Function
Z	(A1|A2|A3)

TRUTH TABLE FOR Z

A1	A2	A3	Z
1	?	?	1
?	1	?	1
?	?	1	1
0	0	0	0

FUNCTIONAL SCHEMATIC

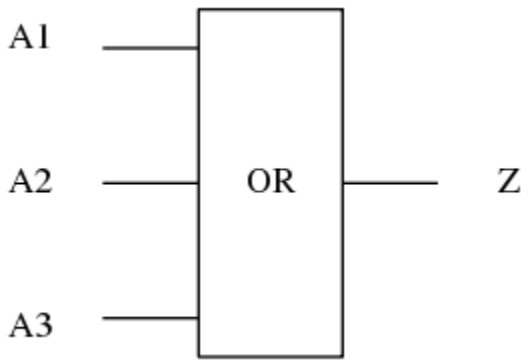

PIN CAPACITANCE (pf)

Pin	Type	Capacitance (pf)
A1	input	0.0047
A2	input	0.0044
A3	input	0.0043

DELAY AND OUTPUT TRANSITION TIME corresponding to min slew and load

Input Pin	Output	When Condition	Tin (ns)	Out Load (pf)	Delay (ns)	Tout (ns)
A1(LH)	Z(LH)	!A2&!A3	0.0100	0.0010	0.1686	0.0321
A1(HL)	Z(HL)	!A2&!A3	0.0100	0.0010	0.3411	0.0615
A2(HL)	Z(HL)	!A1&!A3	0.0100	0.0010	0.3977	0.0615
A2(LH)	Z(LH)	!A1&!A3	0.0100	0.0010	0.1922	0.0334
A3(LH)	Z(LH)	!A1&!A2	0.0100	0.0010	0.2056	0.0351
A3(HL)	Z(HL)	!A1&!A2	0.0100	0.0010	0.4221	0.0617

DYNAMIC ENERGY

Input Pin	When Condition	Tin (ns)	Output	Out Load (pf)	Energy (uW/MHz)
A3	!A1&!A2	0.0100	Z(LH)	0.0010	0.2598
A2	!A1&!A3	0.0100	Z(HL)	0.0010	0.5254
A2	!A1&!A3	0.0100	Z(LH)	0.0010	0.2278
A1	!A2&!A3	0.0100	Z(LH)	0.0010	0.1969
A3	!A1&!A2	0.0100	Z(HL)	0.0010	0.5544
A1	!A2&!A3	0.0100	Z(HL)	0.0010	0.4949
A3(LH)	!A1&A2	0.0100	n/a	n/a	-0.0340
A3(LH)	A1&!A2	0.0100	n/a	n/a	-0.0325
A3(LH)	A1&A2	0.0100	n/a	n/a	-0.0371
A2(LH)	!A1&A3	0.0100	n/a	n/a	-0.0119
A2(LH)	A1&!A3	0.0100	n/a	n/a	-0.0327
A2(LH)	A1&A3	0.0100	n/a	n/a	-0.0289
A1(LH)	!A2&A3	0.0100	n/a	n/a	-0.0108
A1(LH)	A2&!A3	0.0100	n/a	n/a	-0.0110
A1(LH)	A2&A3	0.0100	n/a	n/a	-0.0110
A3(HL)	!A1&A2	0.0100	n/a	n/a	0.0392
A3(HL)	A1&!A2	0.0100	n/a	n/a	0.0393
A3(HL)	A1&A2	0.0100	n/a	n/a	0.0392
A1(HL)	!A2&A3	0.0100	n/a	n/a	0.0523
A1(HL)	A2&!A3	0.0100	n/a	n/a	0.0263
A1(HL)	A2&A3	0.0100	n/a	n/a	0.0263
A2(HL)	!A1&A3	0.0100	n/a	n/a	0.0268
A2(HL)	A1&!A3	0.0100	n/a	n/a	0.0393
A2(HL)	A1&A3	0.0100	n/a	n/a	0.0234

LEAKAGE POWER

When Condition	Power (nW)
!A1&!A2&!A3	0.1793
!A1&!A2&A3	0.1984
!A1&A2&!A3	0.1630
!A1&A2&A3	0.1630
A1&!A2&!A3	0.1274
A1&!A2&A3	0.1274
A1&A2&!A3	0.1274
A1&A2&A3	0.1274

gf180mcu_fd_sc_mcu7t5v0__or3_4

gf180mcu_fd_sc_mcu7t5v0__or3_4 symbol

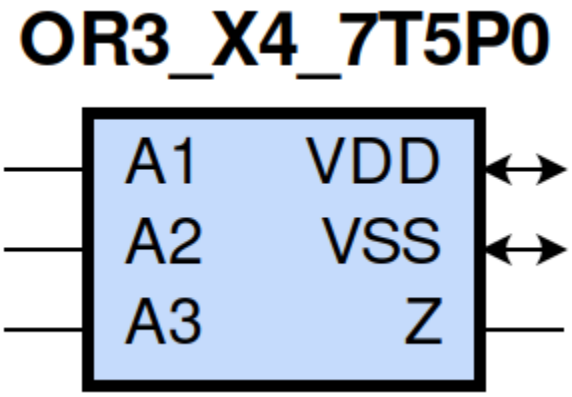

gf180mcu_fd_sc_mcu7t5v0__or3_4 schematic

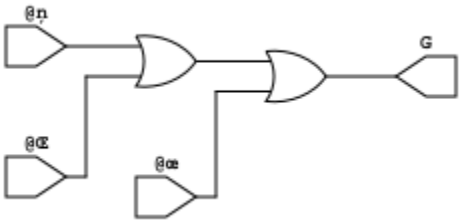

gf180mcu_fd_sc_mcu7t5v0__or3_4 layout

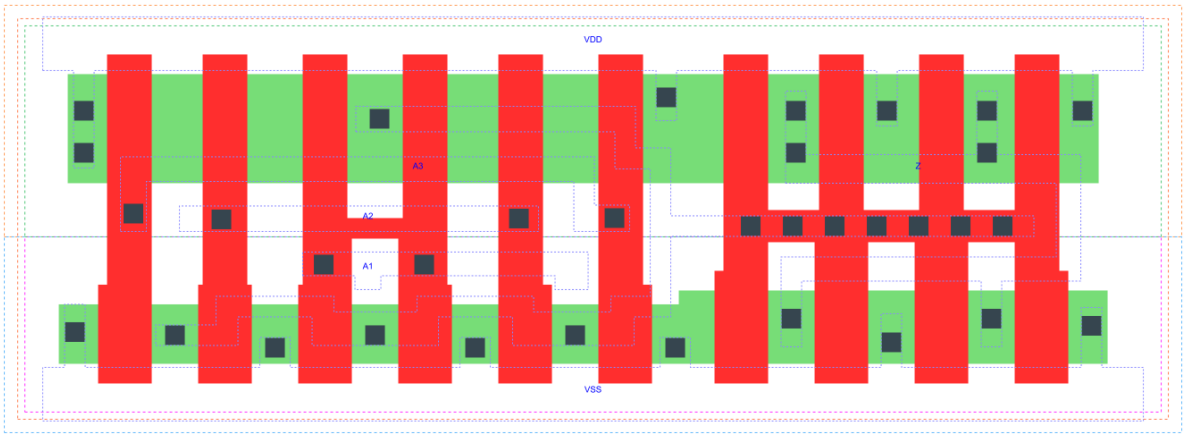

OR3_X4 is a 3-input OR(A1,A2,A3), 4X drive strength

Attributes

Attribute	Value
area	48.294400 μm^2

OUTPUT FUNCTIONS

Output Pin	Function
Z	(A1|A2|A3)

TRUTH TABLE FOR Z

A1	A2	A3	Z
1	?	?	1
?	1	?	1
?	?	1	1
0	0	0	0

FUNCTIONAL SCHEMATIC

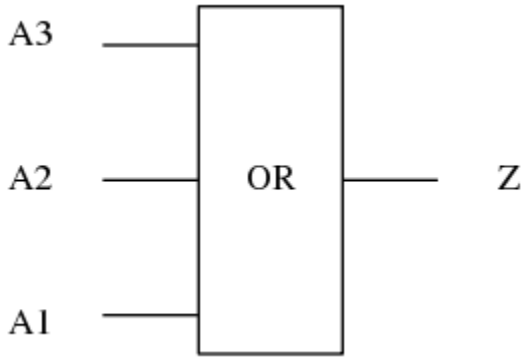

PIN CAPACITANCE (pf)

Pin	Type	Capacitance (pf)
A3	input	0.0094
A2	input	0.0091
A1	input	0.0092

DELAY AND OUTPUT TRANSITION TIME corresponding to min slew and load

Input Pin	Output	When Condition	Tin (ns)	Out Load (pf)	Delay (ns)	Tout (ns)
A3(LH)	Z(LH)	!A1&!A2	0.0100	0.0010	0.1974	0.0324
A3(HL)	Z(HL)	!A1&!A2	0.0100	0.0010	0.4075	0.0576
A2(HL)	Z(HL)	!A1&!A3	0.0100	0.0010	0.3831	0.0576
A2(LH)	Z(LH)	!A1&!A3	0.0100	0.0010	0.1846	0.0307
A1(LH)	Z(LH)	!A2&!A3	0.0100	0.0010	0.1605	0.0295
A1(HL)	Z(HL)	!A2&!A3	0.0100	0.0010	0.3245	0.0574

DYNAMIC ENERGY

Input Pin	When Condition	Tin (ns)	Output	Out Load (pf)	Energy (uW/MHz)
A3	!A1&!A2	0.0100	Z(LH)	0.0010	0.5054
A2	!A1&!A3	0.0100	Z(HL)	0.0010	1.0302
A2	!A1&!A3	0.0100	Z(LH)	0.0010	0.4425
A1	!A2&!A3	0.0100	Z(LH)	0.0010	0.3765
A3	!A1&!A2	0.0100	Z(HL)	0.0010	1.0886
A1	!A2&!A3	0.0100	Z(HL)	0.0010	0.9689
A3(LH)	!A1&A2	0.0100	n/a	n/a	-0.0680
A3(LH)	A1&!A2	0.0100	n/a	n/a	-0.0652
A3(LH)	A1&A2	0.0100	n/a	n/a	-0.0742
A2(LH)	!A1&A3	0.0100	n/a	n/a	-0.0237
A2(LH)	A1&!A3	0.0100	n/a	n/a	-0.0653
A2(LH)	A1&A3	0.0100	n/a	n/a	-0.0577
A1(LH)	!A2&A3	0.0100	n/a	n/a	-0.0216
A1(LH)	A2&!A3	0.0100	n/a	n/a	-0.0221
A1(LH)	A2&A3	0.0100	n/a	n/a	-0.0222
A3(HL)	!A1&A2	0.0100	n/a	n/a	0.0785
A3(HL)	A1&!A2	0.0100	n/a	n/a	0.0785
A3(HL)	A1&A2	0.0100	n/a	n/a	0.0785
A1(HL)	!A2&A3	0.0100	n/a	n/a	0.1065
A1(HL)	A2&!A3	0.0100	n/a	n/a	0.0553
A1(HL)	A2&A3	0.0100	n/a	n/a	0.0553
A2(HL)	!A1&A3	0.0100	n/a	n/a	0.0526
A2(HL)	A1&!A3	0.0100	n/a	n/a	0.0787
A2(HL)	A1&A3	0.0100	n/a	n/a	0.0471

LEAKAGE POWER

When Condition	Power (nW)
!A1&!A2&!A3	0.3086
!A1&!A2&A3	0.3467
!A1&A2&!A3	0.2760
!A1&A2&A3	0.2760
A1&!A2&!A3	0.2048
A1&!A2&A3	0.2048
A1&A2&!A3	0.2048
A1&A2&A3	0.2048

gf180mcu_fd_sc_mcu7t5v0__or4_1

gf180mcu_fd_sc_mcu7t5v0__or4_1 symbol

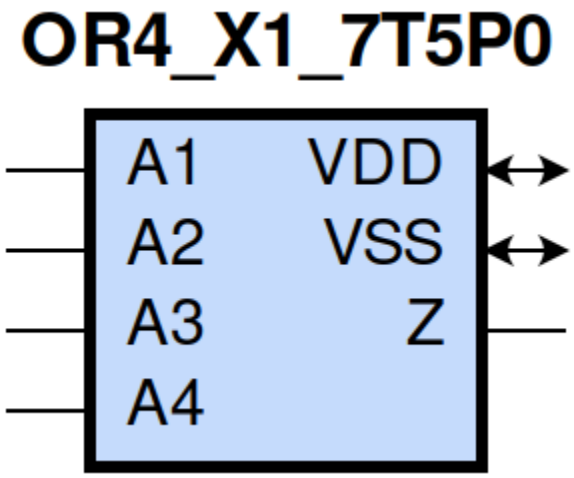

gf180mcu_fd_sc_mcu7t5v0__or4_1 schematic

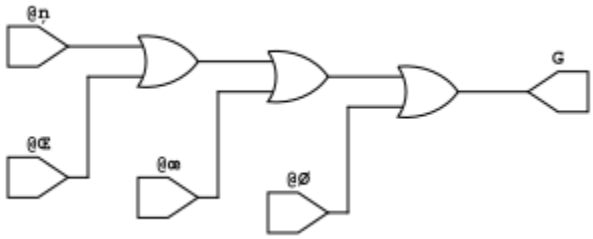

gf180mcu_fd_sc_mcu7t5v0__or4_1 layout

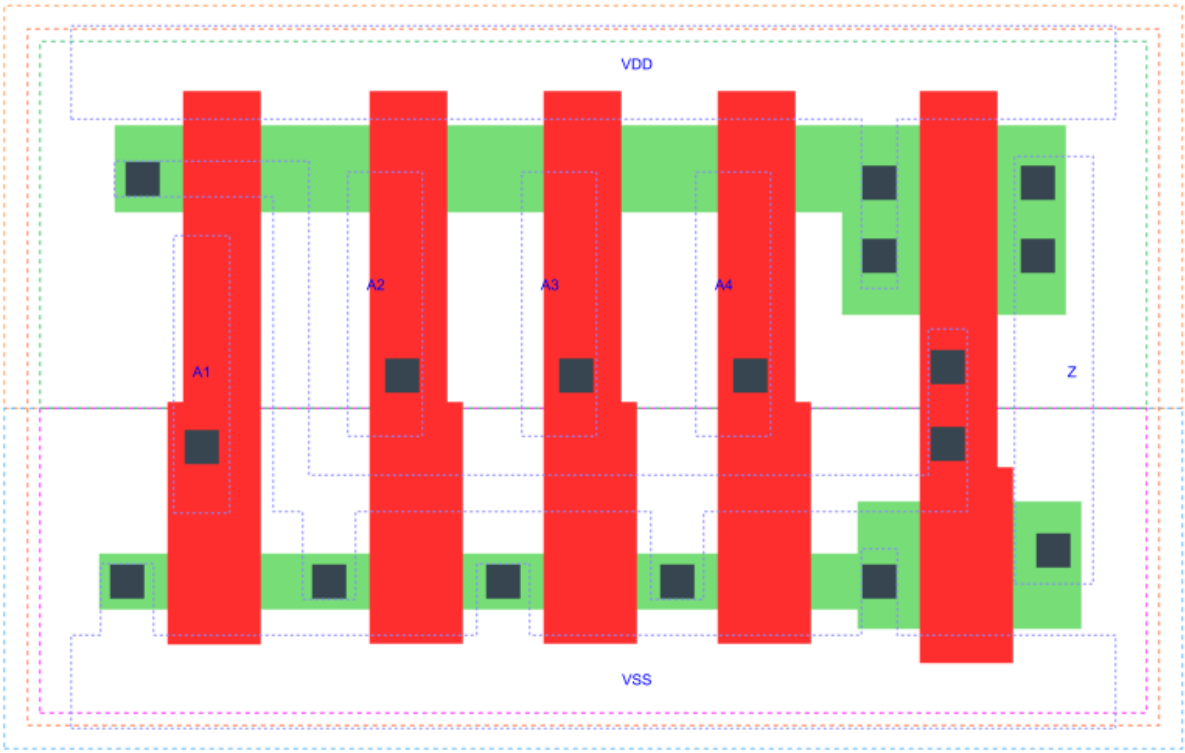

OR4_X1 is a 4-input OR(A1,A2,A3,A4), 1X drive strength

Attributes

Attribute	Value
area	26.342400 μm^2

OUTPUT FUNCTIONS

Output Pin	Function
Z	(A1|A2|A3|A4)

TRUTH TABLE FOR Z

A1	A2	A3	A4	Z
1	?	?	?	1
?	1	?	?	1
?	?	1	?	1
?	?	?	1	1
0	0	0	0	0

FUNCTIONAL SCHEMATIC

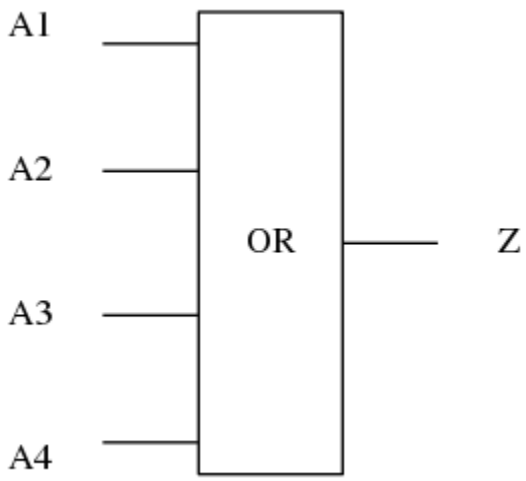

PIN CAPACITANCE (pf)

Pin	Type	Capacitance (pf)
A1	input	0.0028
A2	input	0.0028
A3	input	0.0028
A4	input	0.0027

DELAY AND OUTPUT TRANSITION TIME corresponding to min slew and load

Input Pin	Output	When Condition	Tin (ns)	Out Load (pf)	Delay (ns)	Tout (ns)
A1(LH)	Z(LH)	!A2&!A3&!A4	0.0100	0.0010	0.1898	0.0429
A1(HL)	Z(HL)	!A2&!A3&!A4	0.0100	0.0010	0.5693	0.1072
A2(HL)	Z(HL)	!A1&!A3&!A4	0.0100	0.0010	0.6745	0.1075
A2(LH)	Z(LH)	!A1&!A3&!A4	0.0100	0.0010	0.2102	0.0440
A3(LH)	Z(LH)	!A1&!A2&!A4	0.0100	0.0010	0.2212	0.0454
A3(HL)	Z(HL)	!A1&!A2&!A4	0.0100	0.0010	0.7371	0.1076
A4(LH)	Z(LH)	!A1&!A2&!A3	0.0100	0.0010	0.2242	0.0467
A4(HL)	Z(HL)	!A1&!A2&!A3	0.0100	0.0010	0.7641	0.1073

DYNAMIC ENERGY

Input Pin	When Condition	Tin (ns)	Output	Out Load (pf)	Energy (uW/MHz)
A3	!A1&!A2&!A4	0.0100	Z(LH)	0.0010	0.1464
A2	!A1&!A3&!A4	0.0100	Z(HL)	0.0010	0.3950
A2	!A1&!A3&!A4	0.0100	Z(LH)	0.0010	0.1300
A4	!A1&!A2&!A3	0.0100	Z(LH)	0.0010	0.1606
A1	!A2&!A3&!A4	0.0100	Z(LH)	0.0010	0.1127
A3	!A1&!A2&!A4	0.0100	Z(HL)	0.0010	0.4084
A4	!A1&!A2&!A3	0.0100	Z(HL)	0.0010	0.4218
A1	!A2&!A3&!A4	0.0100	Z(HL)	0.0010	0.3804
A3(LH)	!A1&!A2&A4	0.0100	n/a	n/a	-0.0061
A3(LH)	!A1&A2&!A4	0.0100	n/a	n/a	-0.0156
A3(LH)	!A1&A2&A4	0.0100	n/a	n/a	-0.0141
A3(LH)	A1&!A2&!A4	0.0100	n/a	n/a	-0.0147
A3(LH)	A1&!A2&A4	0.0100	n/a	n/a	-0.0127
A3(LH)	A1&A2&!A4	0.0100	n/a	n/a	-0.0171
A3(LH)	A1&A2&A4	0.0100	n/a	n/a	-0.0164
A2(LH)	!A1&!A3&A4	0.0100	n/a	n/a	-0.0054
A2(LH)	!A1&A3&!A4	0.0100	n/a	n/a	-0.0056
A2(LH)	!A1&A3&A4	0.0100	n/a	n/a	-0.0056
A2(LH)	A1&!A3&!A4	0.0100	n/a	n/a	-0.0149
A2(LH)	A1&!A3&A4	0.0100	n/a	n/a	-0.0115
A2(LH)	A1&A3&!A4	0.0100	n/a	n/a	-0.0131
A2(LH)	A1&A3&A4	0.0100	n/a	n/a	-0.0126
A1(LH)	!A2&!A3&A4	0.0100	n/a	n/a	-0.0051
A1(LH)	!A2&A3&!A4	0.0100	n/a	n/a	-0.0051
A1(LH)	!A2&A3&A4	0.0100	n/a	n/a	-0.0051
A1(LH)	A2&!A3&!A4	0.0100	n/a	n/a	-0.0051
A1(LH)	A2&!A3&A4	0.0100	n/a	n/a	-0.0051
A1(LH)	A2&A3&!A4	0.0100	n/a	n/a	-0.0052
A1(LH)	A2&A3&A4	0.0100	n/a	n/a	-0.0051
A3(HL)	!A1&!A2&A4	0.0100	n/a	n/a	0.0131
A3(HL)	!A1&A2&!A4	0.0100	n/a	n/a	0.0180
A3(HL)	!A1&A2&A4	0.0100	n/a	n/a	0.0114
A3(HL)	A1&!A2&!A4	0.0100	n/a	n/a	0.0180
A3(HL)	A1&!A2&A4	0.0100	n/a	n/a	0.0111

continues on next page

Table 115 – continued from previous page

A3(HL)	A1&A2&!A4	0.0100	n/a	n/a	0.0179
A3(HL)	A1&A2&A4	0.0100	n/a	n/a	0.0114
A4(LH)	!A1&!A2&A3	0.0100	n/a	n/a	-0.0160
A4(LH)	!A1&A2&!A3	0.0100	n/a	n/a	-0.0155
A4(LH)	!A1&A2&A3	0.0100	n/a	n/a	-0.0170
A4(LH)	A1&!A2&!A3	0.0100	n/a	n/a	-0.0152
A4(LH)	A1&!A2&A3	0.0100	n/a	n/a	-0.0168
A4(LH)	A1&A2&!A3	0.0100	n/a	n/a	-0.0155
A4(LH)	A1&A2&A3	0.0100	n/a	n/a	-0.0170
A1(HL)	!A2&!A3&A4	0.0100	n/a	n/a	0.0423
A1(HL)	!A2&A3&!A4	0.0100	n/a	n/a	0.0290
A1(HL)	!A2&A3&A4	0.0100	n/a	n/a	0.0290
A1(HL)	A2&!A3&!A4	0.0100	n/a	n/a	0.0154
A1(HL)	A2&!A3&A4	0.0100	n/a	n/a	0.0154
A1(HL)	A2&A3&!A4	0.0100	n/a	n/a	0.0154
A1(HL)	A2&A3&A4	0.0100	n/a	n/a	0.0154
A2(HL)	!A1&!A3&A4	0.0100	n/a	n/a	0.0271
A2(HL)	!A1&A3&!A4	0.0100	n/a	n/a	0.0138
A2(HL)	!A1&A3&A4	0.0100	n/a	n/a	0.0137
A2(HL)	A1&!A3&!A4	0.0100	n/a	n/a	0.0179
A2(HL)	A1&!A3&A4	0.0100	n/a	n/a	0.0111
A2(HL)	A1&A3&!A4	0.0100	n/a	n/a	0.0115
A2(HL)	A1&A3&A4	0.0100	n/a	n/a	0.0115
A4(HL)	!A1&!A2&A3	0.0100	n/a	n/a	0.0179
A4(HL)	!A1&A2&!A3	0.0100	n/a	n/a	0.0179
A4(HL)	!A1&A2&A3	0.0100	n/a	n/a	0.0179
A4(HL)	A1&!A2&!A3	0.0100	n/a	n/a	0.0179
A4(HL)	A1&!A2&A3	0.0100	n/a	n/a	0.0179
A4(HL)	A1&A2&!A3	0.0100	n/a	n/a	0.0179
A4(HL)	A1&A2&A3	0.0100	n/a	n/a	0.0179

LEAKAGE POWER

When Condition	Power (nW)
!A1&!A2&!A3&!A4	0.1868
!A1&!A2&!A3&A4	0.2084
!A1&!A2&A3&!A4	0.1732
!A1&!A2&A3&A4	0.1732
!A1&A2&!A3&!A4	0.1376
!A1&A2&!A3&A4	0.1376
!A1&A2&A3&!A4	0.1376
!A1&A2&A3&A4	0.1376
A1&!A2&!A3&!A4	0.1015
A1&!A2&!A3&A4	0.1015
A1&!A2&A3&!A4	0.1015
A1&!A2&A3&A4	0.1015
A1&A2&!A3&!A4	0.1015
A1&A2&!A3&A4	0.1015
A1&A2&A3&!A4	0.1015
A1&A2&A3&A4	0.1015

gf180mcu_fd_sc_mcu7t5v0__or4_2

gf180mcu_fd_sc_mcu7t5v0__or4_2 symbol

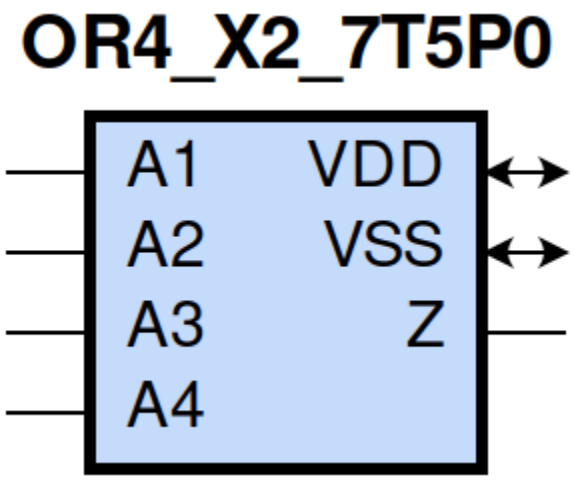

gf180mcu_fd_sc_mcu7t5v0__or4_2 schematic

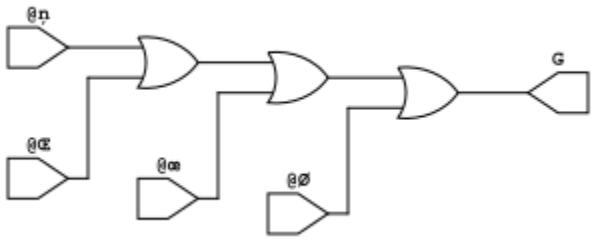

gf180mcu_fd_sc_mcu7t5v0__or4_2 layout

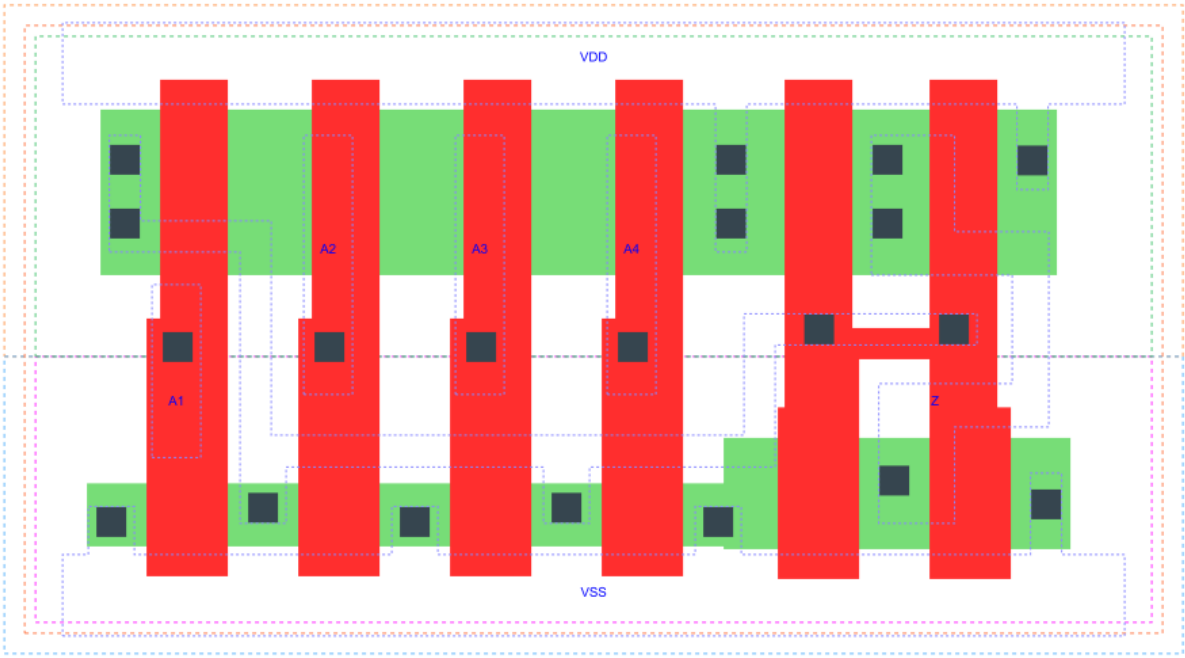

OR4_X2 is a 4-input OR(A1,A2,A3,A4), 2X drive strength

Attributes

Attribute	Value
area	30.732800 μm^2

OUTPUT FUNCTIONS

Output Pin	Function
Z	(A1|A2|A3|A4)

TRUTH TABLE FOR Z

A1	A2	A3	A4	Z
1	?	?	?	1
?	1	?	?	1
?	?	1	?	1
?	?	?	1	1
0	0	0	0	0

FUNCTIONAL SCHEMATIC

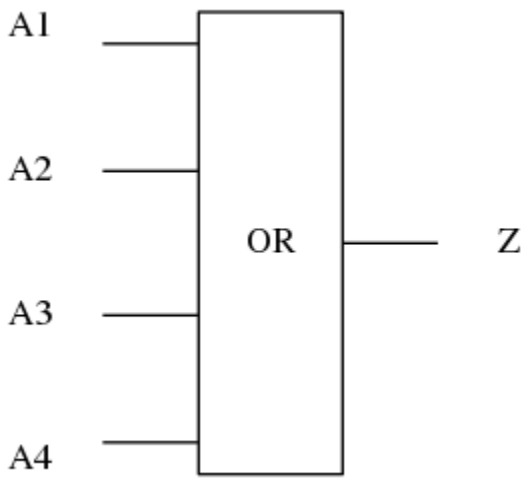

PIN CAPACITANCE (pf)

Pin	Type	Capacitance (pf)
A1	input	0.0041
A2	input	0.0040
A3	input	0.0039
A4	input	0.0040

DELAY AND OUTPUT TRANSITION TIME corresponding to min slew and load

Input Pin	Output	When Condition	Tin (ns)	Out Load (pf)	Delay (ns)	Tout (ns)
A1(LH)	Z(LH)	!A2&!A3&!A4	0.0100	0.0010	0.2166	0.0373
A1(HL)	Z(HL)	!A2&!A3&!A4	0.0100	0.0010	0.3984	0.0764
A2(HL)	Z(HL)	!A1&!A3&!A4	0.0100	0.0010	0.4915	0.0765
A2(LH)	Z(LH)	!A1&!A3&!A4	0.0100	0.0010	0.2517	0.0390
A3(LH)	Z(LH)	!A1&!A2&!A4	0.0100	0.0010	0.2756	0.0413
A3(HL)	Z(HL)	!A1&!A2&!A4	0.0100	0.0010	0.5489	0.0766
A4(LH)	Z(LH)	!A1&!A2&!A3	0.0100	0.0010	0.2868	0.0436
A4(HL)	Z(HL)	!A1&!A2&!A3	0.0100	0.0010	0.5735	0.0765

DYNAMIC ENERGY

Input Pin	When Condition	Tin (ns)	Output	Out Load (pf)	Energy (uW/MHz)
A3	!A1&!A2&!A4	0.0100	Z(LH)	0.0010	0.2944
A2	!A1&!A3&!A4	0.0100	Z(HL)	0.0010	0.6094
A2	!A1&!A3&!A4	0.0100	Z(LH)	0.0010	0.2562
A4	!A1&!A2&!A3	0.0100	Z(LH)	0.0010	0.3285
A1	!A2&!A3&!A4	0.0100	Z(LH)	0.0010	0.2185
A3	!A1&!A2&!A4	0.0100	Z(HL)	0.0010	0.6390
A4	!A1&!A2&!A3	0.0100	Z(HL)	0.0010	0.6681
A1	!A2&!A3&!A4	0.0100	Z(HL)	0.0010	0.5763
A3(LH)	!A1&!A2&A4	0.0100	n/a	n/a	-0.0129
A3(LH)	!A1&A2&!A4	0.0100	n/a	n/a	-0.0340
A3(LH)	!A1&A2&A4	0.0100	n/a	n/a	-0.0305
A3(LH)	A1&!A2&!A4	0.0100	n/a	n/a	-0.0313
A3(LH)	A1&!A2&A4	0.0100	n/a	n/a	-0.0265
A3(LH)	A1&A2&!A4	0.0100	n/a	n/a	-0.0372
A3(LH)	A1&A2&A4	0.0100	n/a	n/a	-0.0350
A2(LH)	!A1&!A3&A4	0.0100	n/a	n/a	-0.0115
A2(LH)	!A1&A3&!A4	0.0100	n/a	n/a	-0.0119
A2(LH)	!A1&A3&A4	0.0100	n/a	n/a	-0.0119
A2(LH)	A1&!A3&!A4	0.0100	n/a	n/a	-0.0326
A2(LH)	A1&!A3&A4	0.0100	n/a	n/a	-0.0246
A2(LH)	A1&A3&!A4	0.0100	n/a	n/a	-0.0288
A2(LH)	A1&A3&A4	0.0100	n/a	n/a	-0.0276
A1(LH)	!A2&!A3&A4	0.0100	n/a	n/a	-0.0109
A1(LH)	!A2&A3&!A4	0.0100	n/a	n/a	-0.0108
A1(LH)	!A2&A3&A4	0.0100	n/a	n/a	-0.0108
A1(LH)	A2&!A3&!A4	0.0100	n/a	n/a	-0.0111
A1(LH)	A2&!A3&A4	0.0100	n/a	n/a	-0.0110
A1(LH)	A2&A3&!A4	0.0100	n/a	n/a	-0.0110
A1(LH)	A2&A3&A4	0.0100	n/a	n/a	-0.0111
A3(HL)	!A1&!A2&A4	0.0100	n/a	n/a	0.0254
A3(HL)	!A1&A2&!A4	0.0100	n/a	n/a	0.0393
A3(HL)	!A1&A2&A4	0.0100	n/a	n/a	0.0237
A3(HL)	A1&!A2&!A4	0.0100	n/a	n/a	0.0393
A3(HL)	A1&!A2&A4	0.0100	n/a	n/a	0.0230

continues on next page

Table 116 – continued from previous page

A3(HL)	A1&A2&!A4	0.0100	n/a	n/a	0.0393
A3(HL)	A1&A2&A4	0.0100	n/a	n/a	0.0237
A4(LH)	!A1&!A2&A3	0.0100	n/a	n/a	-0.0349
A4(LH)	!A1&A2&!A3	0.0100	n/a	n/a	-0.0336
A4(LH)	!A1&A2&A3	0.0100	n/a	n/a	-0.0371
A4(LH)	A1&!A2&!A3	0.0100	n/a	n/a	-0.0328
A4(LH)	A1&!A2&A3	0.0100	n/a	n/a	-0.0365
A4(LH)	A1&A2&!A3	0.0100	n/a	n/a	-0.0337
A4(LH)	A1&A2&A3	0.0100	n/a	n/a	-0.0371
A1(HL)	!A2&!A3&A4	0.0100	n/a	n/a	0.0798
A1(HL)	!A2&A3&!A4	0.0100	n/a	n/a	0.0542
A1(HL)	!A2&A3&A4	0.0100	n/a	n/a	0.0542
A1(HL)	A2&!A3&!A4	0.0100	n/a	n/a	0.0281
A1(HL)	A2&!A3&A4	0.0100	n/a	n/a	0.0281
A1(HL)	A2&A3&!A4	0.0100	n/a	n/a	0.0281
A1(HL)	A2&A3&A4	0.0100	n/a	n/a	0.0281
A2(HL)	!A1&!A3&A4	0.0100	n/a	n/a	0.0524
A2(HL)	!A1&A3&!A4	0.0100	n/a	n/a	0.0267
A2(HL)	!A1&A3&A4	0.0100	n/a	n/a	0.0267
A2(HL)	A1&!A3&!A4	0.0100	n/a	n/a	0.0392
A2(HL)	A1&!A3&A4	0.0100	n/a	n/a	0.0230
A2(HL)	A1&A3&!A4	0.0100	n/a	n/a	0.0236
A2(HL)	A1&A3&A4	0.0100	n/a	n/a	0.0237
A4(HL)	!A1&!A2&A3	0.0100	n/a	n/a	0.0392
A4(HL)	!A1&A2&!A3	0.0100	n/a	n/a	0.0392
A4(HL)	!A1&A2&A3	0.0100	n/a	n/a	0.0392
A4(HL)	A1&!A2&!A3	0.0100	n/a	n/a	0.0393
A4(HL)	A1&!A2&A3	0.0100	n/a	n/a	0.0392
A4(HL)	A1&A2&!A3	0.0100	n/a	n/a	0.0392
A4(HL)	A1&A2&A3	0.0100	n/a	n/a	0.0393

LEAKAGE POWER

When Condition	Power (nW)
!A1&!A2&!A3&!A4	0.2059
!A1&!A2&!A3&A4	0.2334
!A1&!A2&A3&!A4	0.1984
!A1&!A2&A3&A4	0.1984
!A1&A2&!A3&!A4	0.1630
!A1&A2&!A3&A4	0.1630
!A1&A2&A3&!A4	0.1630
!A1&A2&A3&A4	0.1630
A1&!A2&!A3&!A4	0.1274
A1&!A2&!A3&A4	0.1274
A1&!A2&A3&!A4	0.1274
A1&!A2&A3&A4	0.1274
A1&A2&!A3&!A4	0.1274
A1&A2&!A3&A4	0.1274
A1&A2&A3&!A4	0.1274
A1&A2&A3&A4	0.1274

gf180mcu_fd_sc_mcu7t5v0__or4_4

gf180mcu_fd_sc_mcu7t5v0__or4_4 symbol

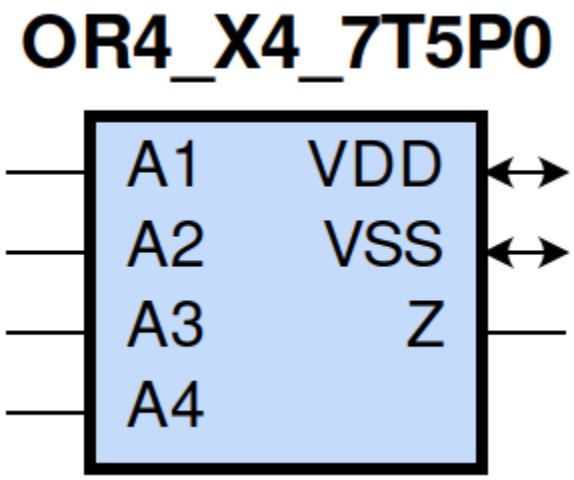

gf180mcu_fd_sc_mcu7t5v0__or4_4 schematic

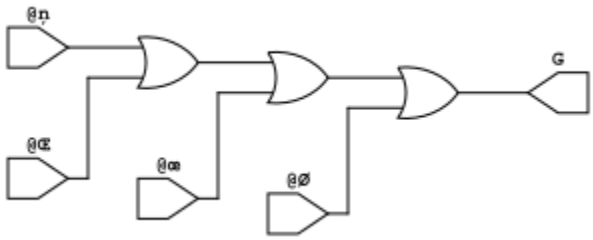

gf180mcu_fd_sc_mcu7t5v0__or4_4 layout

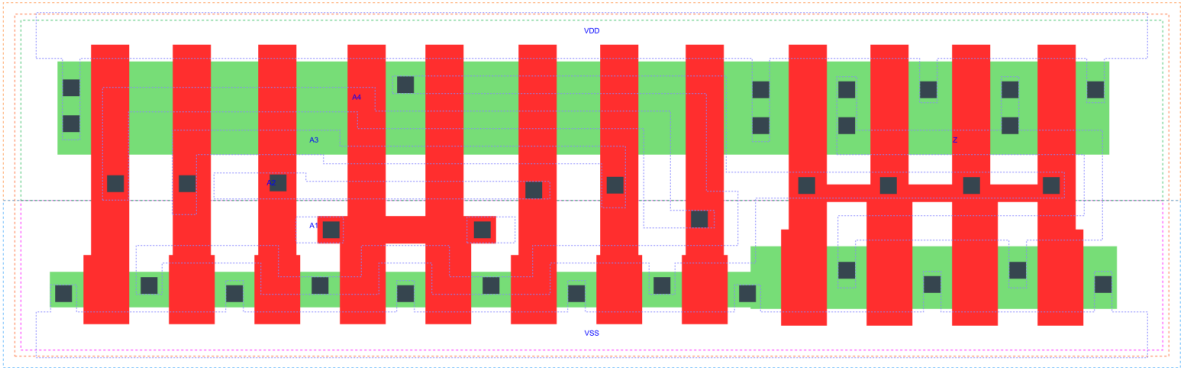

OR4_X4 is a 4-input OR(A1,A2,A3,A4), 4X drive strength

Attributes

Attribute	Value
area	57.075200 μm^2

OUTPUT FUNCTIONS

Output Pin	Function
Z	(A1|A2|A3|A4)

TRUTH TABLE FOR Z

A1	A2	A3	A4	Z
1	?	?	?	1
?	1	?	?	1
?	?	1	?	1
?	?	?	1	1
0	0	0	0	0

FUNCTIONAL SCHEMATIC

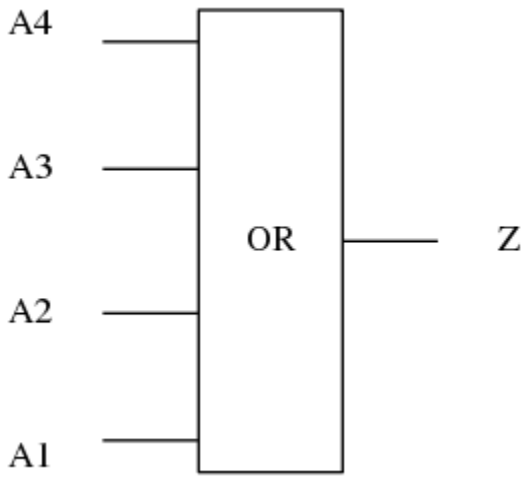

PIN CAPACITANCE (pf)

Pin	Type	Capacitance (pf)
A4	input	0.0098
A3	input	0.0091
A2	input	0.0084
A1	input	0.0080

DELAY AND OUTPUT TRANSITION TIME corresponding to min slew and load

Input Pin	Output	When Condition	Tin (ns)	Out Load (pf)	Delay (ns)	Tout (ns)
A4(LH)	Z(LH)	!A1&!A2&!A3	0.0100	0.0010	0.2831	0.0417
A4(HL)	Z(HL)	!A1&!A2&!A3	0.0100	0.0010	0.5692	0.0739
A3(LH)	Z(LH)	!A1&!A2&!A4	0.0100	0.0010	0.2721	0.0395
A3(HL)	Z(HL)	!A1&!A2&!A4	0.0100	0.0010	0.5451	0.0737
A2(HL)	Z(HL)	!A1&!A3&!A4	0.0100	0.0010	0.4883	0.0738
A2(LH)	Z(LH)	!A1&!A3&!A4	0.0100	0.0010	0.2487	0.0372
A1(LH)	Z(LH)	!A2&!A3&!A4	0.0100	0.0010	0.2131	0.0353
A1(HL)	Z(HL)	!A2&!A3&!A4	0.0100	0.0010	0.3926	0.0738

DYNAMIC ENERGY

Input Pin	When Condition	Tin (ns)	Output	Out Load (pf)	Energy (uW/MHz)
A3	!A1&!A2&!A4	0.0100	Z(LH)	0.0010	0.5775
A2	!A1&!A3&!A4	0.0100	Z(HL)	0.0010	1.2393
A2	!A1&!A3&!A4	0.0100	Z(LH)	0.0010	0.5019
A4	!A1&!A2&!A3	0.0100	Z(LH)	0.0010	0.6449
A1	!A2&!A3&!A4	0.0100	Z(LH)	0.0010	0.4234
A3	!A1&!A2&!A4	0.0100	Z(HL)	0.0010	1.2981
A4	!A1&!A2&!A3	0.0100	Z(HL)	0.0010	1.3567
A1	!A2&!A3&!A4	0.0100	Z(HL)	0.0010	1.1732
A3(LH)	!A1&!A2&A4	0.0100	n/a	n/a	-0.0258
A3(LH)	!A1&A2&!A4	0.0100	n/a	n/a	-0.0681
A3(LH)	!A1&A2&A4	0.0100	n/a	n/a	-0.0612
A3(LH)	A1&!A2&!A4	0.0100	n/a	n/a	-0.0628
A3(LH)	A1&!A2&A4	0.0100	n/a	n/a	-0.0535
A3(LH)	A1&A2&!A4	0.0100	n/a	n/a	-0.0746
A3(LH)	A1&A2&A4	0.0100	n/a	n/a	-0.0707
A2(LH)	!A1&!A3&A4	0.0100	n/a	n/a	-0.0231
A2(LH)	!A1&A3&!A4	0.0100	n/a	n/a	-0.0239
A2(LH)	!A1&A3&A4	0.0100	n/a	n/a	-0.0239
A2(LH)	A1&!A3&!A4	0.0100	n/a	n/a	-0.0651
A2(LH)	A1&!A3&A4	0.0100	n/a	n/a	-0.0491
A2(LH)	A1&A3&!A4	0.0100	n/a	n/a	-0.0575
A2(LH)	A1&A3&A4	0.0100	n/a	n/a	-0.0550
A1(LH)	!A2&!A3&A4	0.0100	n/a	n/a	-0.0219
A1(LH)	!A2&A3&!A4	0.0100	n/a	n/a	-0.0218
A1(LH)	!A2&A3&A4	0.0100	n/a	n/a	-0.0218
A1(LH)	A2&!A3&!A4	0.0100	n/a	n/a	-0.0223
A1(LH)	A2&!A3&A4	0.0100	n/a	n/a	-0.0223
A1(LH)	A2&A3&!A4	0.0100	n/a	n/a	-0.0223
A1(LH)	A2&A3&A4	0.0100	n/a	n/a	-0.0223
A3(HL)	!A1&!A2&A4	0.0100	n/a	n/a	0.0499
A3(HL)	!A1&A2&!A4	0.0100	n/a	n/a	0.0787
A3(HL)	!A1&A2&A4	0.0100	n/a	n/a	0.0471
A3(HL)	A1&!A2&!A4	0.0100	n/a	n/a	0.0787
A3(HL)	A1&!A2&A4	0.0100	n/a	n/a	0.0463
A3(HL)	A1&A2&!A4	0.0100	n/a	n/a	0.0787
A3(HL)	A1&A2&A4	0.0100	n/a	n/a	0.0471
A4(LH)	!A1&!A2&A3	0.0100	n/a	n/a	-0.0698
A4(LH)	!A1&A2&!A3	0.0100	n/a	n/a	-0.0671
A4(LH)	!A1&A2&A3	0.0100	n/a	n/a	-0.0742
A4(LH)	A1&!A2&!A3	0.0100	n/a	n/a	-0.0656
A4(LH)	A1&!A2&A3	0.0100	n/a	n/a	-0.0731
A4(LH)	A1&A2&!A3	0.0100	n/a	n/a	-0.0673
A4(LH)	A1&A2&A3	0.0100	n/a	n/a	-0.0742
A1(HL)	!A2&!A3&A4	0.0100	n/a	n/a	0.1606
A1(HL)	!A2&A3&!A4	0.0100	n/a	n/a	0.1102
A1(HL)	!A2&A3&A4	0.0100	n/a	n/a	0.1101
A1(HL)	A2&!A3&!A4	0.0100	n/a	n/a	0.0590
A1(HL)	A2&!A3&A4	0.0100	n/a	n/a	0.0589
A1(HL)	A2&A3&!A4	0.0100	n/a	n/a	0.0589
A1(HL)	A2&A3&A4	0.0100	n/a	n/a	0.0589
A2(HL)	!A1&!A3&A4	0.0100	n/a	n/a	0.1030

continues on next page

Table 117 – continued from previous page

A2(HL)	!A1&A3&!A4	0.0100	n/a	n/a	0.0524
A2(HL)	!A1&A3&A4	0.0100	n/a	n/a	0.0525
A2(HL)	A1&!A3&!A4	0.0100	n/a	n/a	0.0785
A2(HL)	A1&!A3&A4	0.0100	n/a	n/a	0.0462
A2(HL)	A1&A3&!A4	0.0100	n/a	n/a	0.0477
A2(HL)	A1&A3&A4	0.0100	n/a	n/a	0.0478
A4(HL)	!A1&!A2&A3	0.0100	n/a	n/a	0.0784
A4(HL)	!A1&A2&!A3	0.0100	n/a	n/a	0.0785
A4(HL)	!A1&A2&A3	0.0100	n/a	n/a	0.0784
A4(HL)	A1&!A2&!A3	0.0100	n/a	n/a	0.0785
A4(HL)	A1&!A2&A3	0.0100	n/a	n/a	0.0784
A4(HL)	A1&A2&!A3	0.0100	n/a	n/a	0.0785
A4(HL)	A1&A2&A3	0.0100	n/a	n/a	0.0784

LEAKAGE POWER

When Condition	Power (nW)
!A1&!A2&!A3&!A4	0.3619
!A1&!A2&!A3&A4	0.4167
!A1&!A2&A3&!A4	0.3467
!A1&!A2&A3&A4	0.3467
!A1&A2&!A3&!A4	0.2760
!A1&A2&!A3&A4	0.2760
!A1&A2&A3&!A4	0.2760
!A1&A2&A3&A4	0.2760
A1&!A2&!A3&!A4	0.2048
A1&!A2&!A3&A4	0.2048
A1&!A2&A3&!A4	0.2048
A1&!A2&A3&A4	0.2048
A1&A2&!A3&!A4	0.2048
A1&A2&!A3&A4	0.2048
A1&A2&A3&!A4	0.2048
A1&A2&A3&A4	0.2048

gf180mcu_fd_sc_mcu7t5v0__sdffq_1

gf180mcu_fd_sc_mcu7t5v0__sdffq_1 symbol

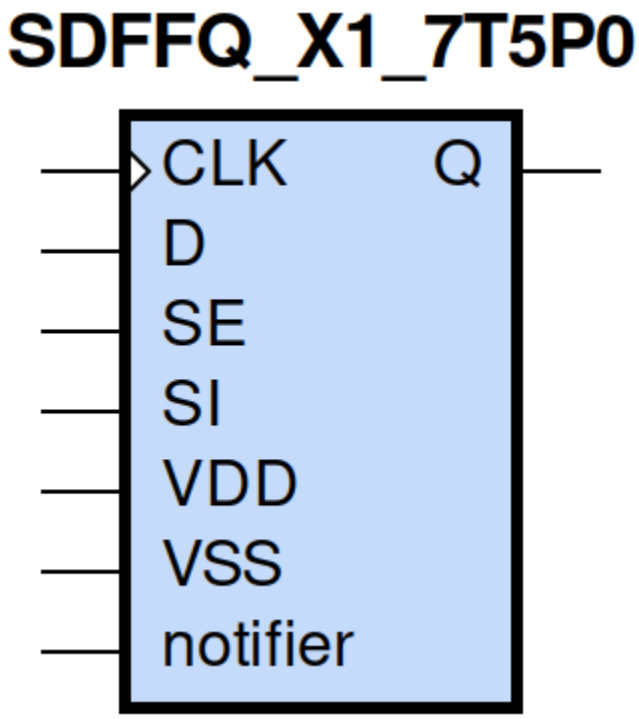

gf180mcu_fd_sc_mcu7t5v0__sdffq_1 schematic

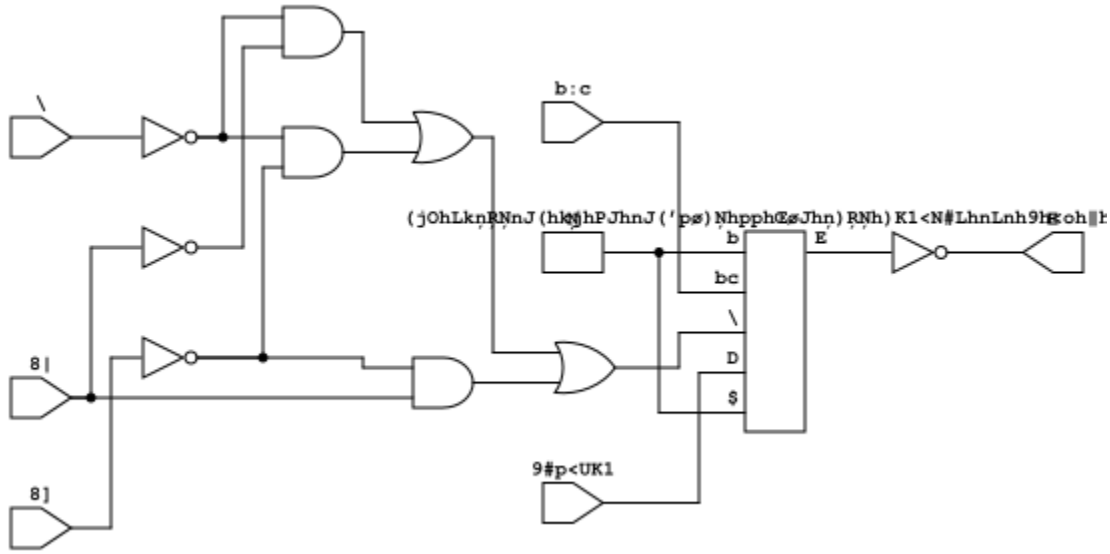

gf180mcu_fd_sc_mcu7t5v0__sdffq_1 layout

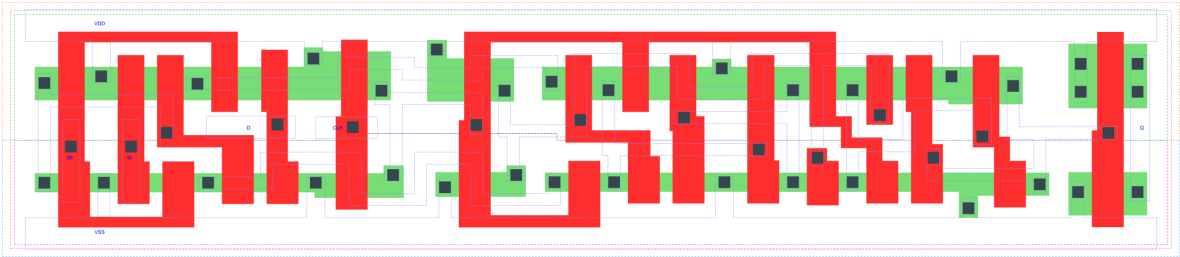

SDFFQ_X1 is a positive edge triggered scan D-type flip flop, 1X drive strength

Attributes

Attribute	Value
area	83.417600 μm^2

TRUTH TABLE

Input				Output
SE	SI	D	CLK	Q
L	X	L	↑	L
L	X	H	↑	H
H	L	X	↑	L
H	H	X	↑	H

FUNCTIONAL SCHEMATIC

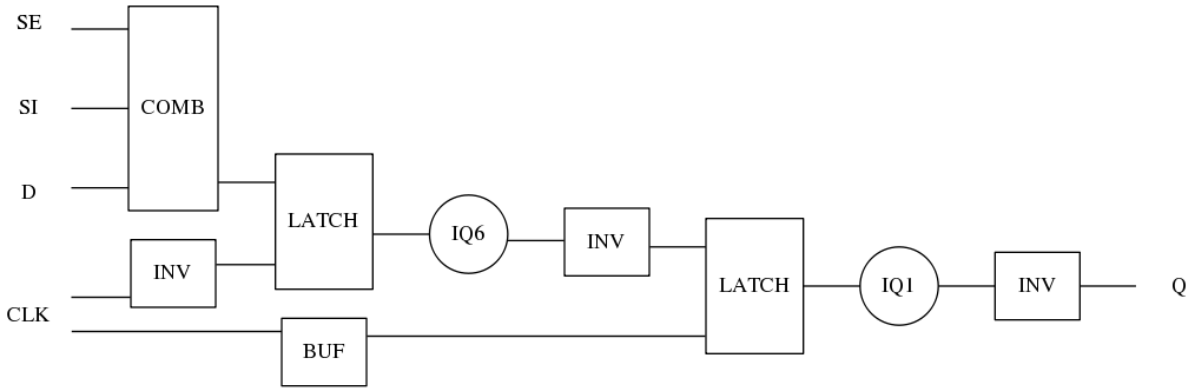

CONSTRAINTS

Constraint Pin	Related Pin	setup(ns)	hold(ns)
SE(LH)	CLK(LH)	0.4640	-0.2180
SE(LH)	CLK(LH)	0.6070	-0.1370
SE(HL)	CLK(LH)	0.5040	-0.0400
SE(HL)	CLK(LH)	0.5950	-0.3440
SI(HL)	CLK(LH)	0.5720	-0.1030
SI(HL)	CLK(LH)	0.5730	-0.1030
SI(LH)	CLK(LH)	0.5100	-0.2580
SI(LH)	CLK(LH)	0.5100	-0.2580
D(HL)	CLK(LH)	0.5730	-0.1030
D(HL)	CLK(LH)	0.5720	-0.1030
D(LH)	CLK(LH)	0.5150	-0.2630
D(LH)	CLK(LH)	0.5150	-0.2630

Constraint Pin	Related Pin	Minimum Pulse Width(ns)
CLK(HLH)	CLK(HL)	0.6690
CLK(HLH)	CLK(HL)	0.6690
CLK(HLH)	CLK(HL)	0.6690
CLK(HLH)	CLK(HL)	0.5710
CLK(HLH)	CLK(HL)	0.5710
CLK(HLH)	CLK(HL)	0.6690
CLK(HLH)	CLK(HL)	0.5710
CLK(HLH)	CLK(HL)	0.5710
CLK(LHL)	CLK(LH)	0.3100
CLK(LHL)	CLK(LH)	0.3100
CLK(LHL)	CLK(LH)	0.3100
CLK(LHL)	CLK(LH)	0.3580
CLK(LHL)	CLK(LH)	0.3580
CLK(LHL)	CLK(LH)	0.3100
CLK(LHL)	CLK(LH)	0.3580
CLK(LHL)	CLK(LH)	0.3580

PIN CAPACITANCE (pf)

Pin	Type	Capacitance (pf)
SE	input	0.0059
SI	input	0.0027
D	input	0.0027
CLK	input	0.0035

DELAY AND OUTPUT TRANSITION TIME corresponding to min slew and load

Input Pin	Output	When Condition	Tin (ns)	Out Load (pf)	Delay (ns)	Tout (ns)
CLK(LH)	Q(HL)	!D&!SE&!SI	0.0100	0.0010	0.6117	0.0421
CLK(LH)	Q(HL)	!D&!SE&SI	0.0100	0.0010	0.6117	0.0422
CLK(LH)	Q(HL)	!D&SE&!SI	0.0100	0.0010	0.6117	0.0421
CLK(LH)	Q(HL)	D&SE&!SI	0.0100	0.0010	0.6117	0.0421
CLK(LH)	Q(LH)	!D&SE&SI	0.0100	0.0010	0.5540	0.0435
CLK(LH)	Q(LH)	D&!SE&!SI	0.0100	0.0010	0.5540	0.0435
CLK(LH)	Q(LH)	D&!SE&SI	0.0100	0.0010	0.5541	0.0434
CLK(LH)	Q(LH)	D&SE&SI	0.0100	0.0010	0.5540	0.0435

DYNAMIC ENERGY

Input Pin	When Condition	Tin (ns)	Output	Out Load (pf)	Energy (uW/MHz)
CLK	!D&!SE&!SI	0.0100	Q(HL)	0.0010	0.5124
CLK	!D&!SE&SI	0.0100	Q(HL)	0.0010	0.5124
CLK	!D&SE&!SI	0.0100	Q(HL)	0.0010	0.5123
CLK	D&SE&!SI	0.0100	Q(HL)	0.0010	0.5122
CLK	!D&SE&SI	0.0100	Q(LH)	0.0010	0.4922
CLK	D&!SE&!SI	0.0100	Q(LH)	0.0010	0.4920
CLK	D&!SE&SI	0.0100	Q(LH)	0.0010	0.4921
CLK	D&SE&SI	0.0100	Q(LH)	0.0010	0.4922
D(HL)	!CLK&!SE&!SI	0.0100	n/a	n/a	0.3348
D(HL)	!CLK&SE&!SI	0.0100	n/a	n/a	0.0203
D(HL)	!CLK&!SE&SI	0.0100	n/a	n/a	0.3349
D(HL)	!CLK&SE&SI	0.0100	n/a	n/a	0.0201
D(HL)	CLK&!SE&!SI	0.0100	n/a	n/a	0.0692
D(HL)	CLK&SE&!SI	0.0100	n/a	n/a	0.0201
D(HL)	CLK&!SE&SI	0.0100	n/a	n/a	0.0692
D(HL)	CLK&SE&SI	0.0100	n/a	n/a	0.0201
SE(LH)	!CLK&!D&!SI	0.0100	n/a	n/a	0.0045
SE(LH)	!CLK&!D&SI	0.0100	n/a	n/a	0.1791
SE(LH)	CLK&!D&!SI	0.0100	n/a	n/a	0.0011
SE(LH)	CLK&!D&SI	0.0100	n/a	n/a	-0.0041
SE(LH)	!CLK&D&!SI	0.0100	n/a	n/a	0.3211
SE(LH)	!CLK&D&SI	0.0100	n/a	n/a	0.0057
SE(LH)	CLK&D&!SI	0.0100	n/a	n/a	0.0484
SE(LH)	CLK&D&SI	0.0100	n/a	n/a	0.0037
CLK(LH)	!D&!SE&!SI	0.0100	n/a	n/a	0.2168
CLK(LH)	!D&SE&!SI	0.0100	n/a	n/a	0.2167
CLK(LH)	!D&!SE&SI	0.0100	n/a	n/a	0.2168
CLK(LH)	!D&SE&SI	0.0100	n/a	n/a	0.2185
CLK(LH)	D&!SE&!SI	0.0100	n/a	n/a	0.2185
CLK(LH)	D&SE&!SI	0.0100	n/a	n/a	0.2167

continues on next page

Table 118 – continued from previous page

CLK(LH)	D&!SE&SI	0.0100	n/a	n/a	0.2184
CLK(LH)	D&SE&SI	0.0100	n/a	n/a	0.2186
SI(LH)	!CLK&!D&!SE	0.0100	n/a	n/a	-0.0198
SI(LH)	!CLK&!D&SE	0.0100	n/a	n/a	0.1761
SI(LH)	CLK&!D&!SE	0.0100	n/a	n/a	-0.0198
SI(LH)	CLK&!D&SE	0.0100	n/a	n/a	-0.0157
SI(LH)	!CLK&D&!SE	0.0100	n/a	n/a	-0.0182
SI(LH)	!CLK&D&SE	0.0100	n/a	n/a	0.1761
SI(LH)	CLK&D&!SE	0.0100	n/a	n/a	-0.0185
SI(LH)	CLK&D&SE	0.0100	n/a	n/a	-0.0157
SE(HL)	!CLK&!D&!SI	0.0100	n/a	n/a	0.1170
SE(HL)	!CLK&!D&SI	0.0100	n/a	n/a	0.4120
SE(HL)	CLK&!D&!SI	0.0100	n/a	n/a	0.1140
SE(HL)	CLK&!D&SI	0.0100	n/a	n/a	0.1562
SE(HL)	!CLK&D&!SI	0.0100	n/a	n/a	0.3145
SE(HL)	!CLK&D&SI	0.0100	n/a	n/a	0.1182
SE(HL)	CLK&D&!SI	0.0100	n/a	n/a	0.1241
SE(HL)	CLK&D&SI	0.0100	n/a	n/a	0.1151
CLK(HL)	!D&!SE&!SI	0.0100	n/a	n/a	0.2786
CLK(HL)	!D&SE&!SI	0.0100	n/a	n/a	0.2787
CLK(HL)	!D&!SE&SI	0.0100	n/a	n/a	0.2786
CLK(HL)	!D&SE&SI	0.0100	n/a	n/a	0.2825
CLK(HL)	D&!SE&!SI	0.0100	n/a	n/a	0.2826
CLK(HL)	D&SE&!SI	0.0100	n/a	n/a	0.2787
CLK(HL)	D&!SE&SI	0.0100	n/a	n/a	0.2766
CLK(HL)	D&SE&SI	0.0100	n/a	n/a	0.2765
SI(HL)	!CLK&!D&!SE	0.0100	n/a	n/a	0.0203
SI(HL)	!CLK&!D&SE	0.0100	n/a	n/a	0.3471
SI(HL)	CLK&!D&!SE	0.0100	n/a	n/a	0.0203
SI(HL)	CLK&!D&SE	0.0100	n/a	n/a	0.0702
SI(HL)	!CLK&D&!SE	0.0100	n/a	n/a	0.0202
SI(HL)	!CLK&D&SE	0.0100	n/a	n/a	0.3470
SI(HL)	CLK&D&!SE	0.0100	n/a	n/a	0.0202
SI(HL)	CLK&D&SE	0.0100	n/a	n/a	0.0702
D(LH)	!CLK&!SE&!SI	0.0100	n/a	n/a	0.1915
D(LH)	!CLK&SE&!SI	0.0100	n/a	n/a	-0.0196
D(LH)	!CLK&!SE&SI	0.0100	n/a	n/a	0.1915
D(LH)	!CLK&SE&SI	0.0100	n/a	n/a	-0.0178
D(LH)	CLK&!SE&!SI	0.0100	n/a	n/a	-0.0052
D(LH)	CLK&SE&!SI	0.0100	n/a	n/a	-0.0196
D(LH)	CLK&!SE&SI	0.0100	n/a	n/a	-0.0052
D(LH)	CLK&SE&SI	0.0100	n/a	n/a	-0.0180

LEAKAGE POWER

When Condition	Power (nW)
!CLK&!D&!SE&!SI	0.4735
!CLK&!D&!SE&SI	0.4750
!CLK&!D&SE&!SI	0.4741
!CLK&D&SE&!SI	0.4756
!CLK&!D&SE&SI	0.4978
!CLK&D&!SE&!SI	0.5004
!CLK&D&!SE&SI	0.4779
!CLK&D&SE&SI	0.4752
CLK&!D&!SE&!SI	0.4070
CLK&!D&!SE&SI	0.4071
CLK&!D&SE&!SI	0.3989
CLK&D&SE&!SI	0.3989
CLK&!D&SE&SI	0.5362
CLK&D&!SE&!SI	0.5339
CLK&D&!SE&SI	0.4658
CLK&D&SE&SI	0.4681

gf180mcu_fd_sc_mcu7t5v0__sdffq_2

gf180mcu_fd_sc_mcu7t5v0__sdffq_2 symbol

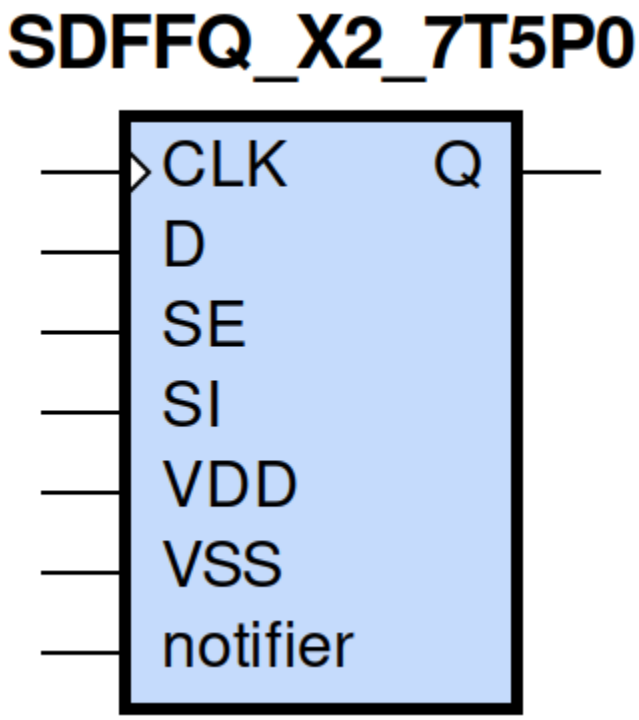

gf180mcu_fd_sc_mcu7t5v0__sdffq_2 schematic

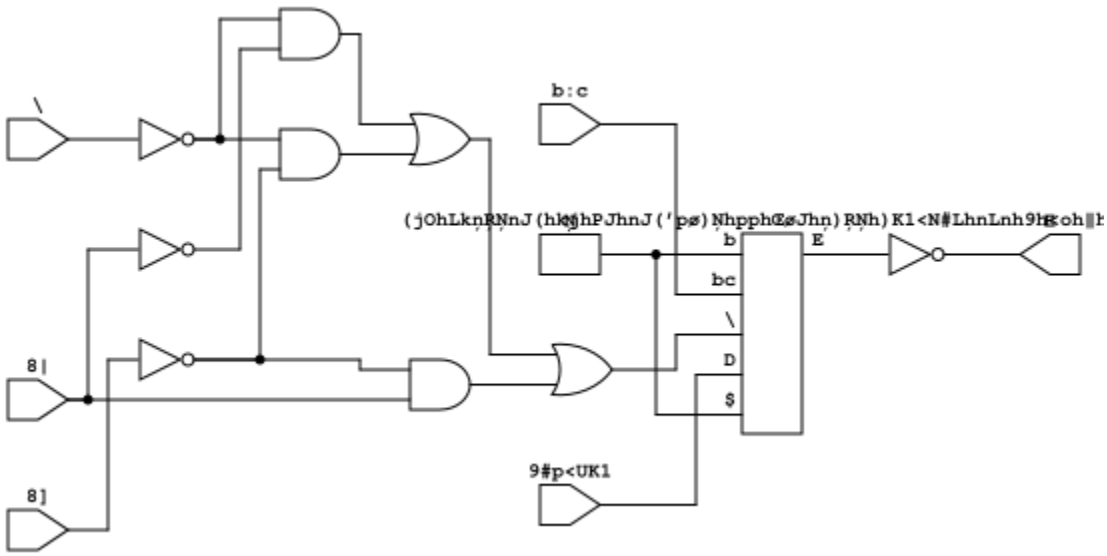

gf180mcu_fd_sc_mcu7t5v0__sdffq_2 layout

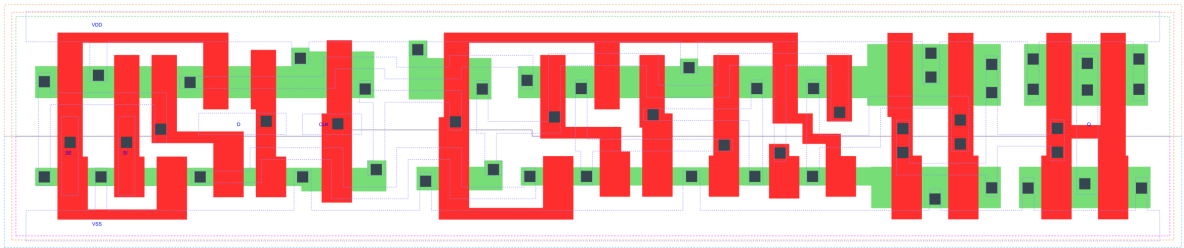

SDFFQ_X2 is a positive edge triggered scan D-type flip flop, 2X drive strength

Attributes

Attribute	Value
area	87.808000 μm^2

TRUTH TABLE

Input				Output
SE	SI	D	CLK	Q
L	X	L	↑	L
L	X	H	↑	H
H	L	X	↑	L
H	H	X	↑	H

FUNCTIONAL SCHEMATIC

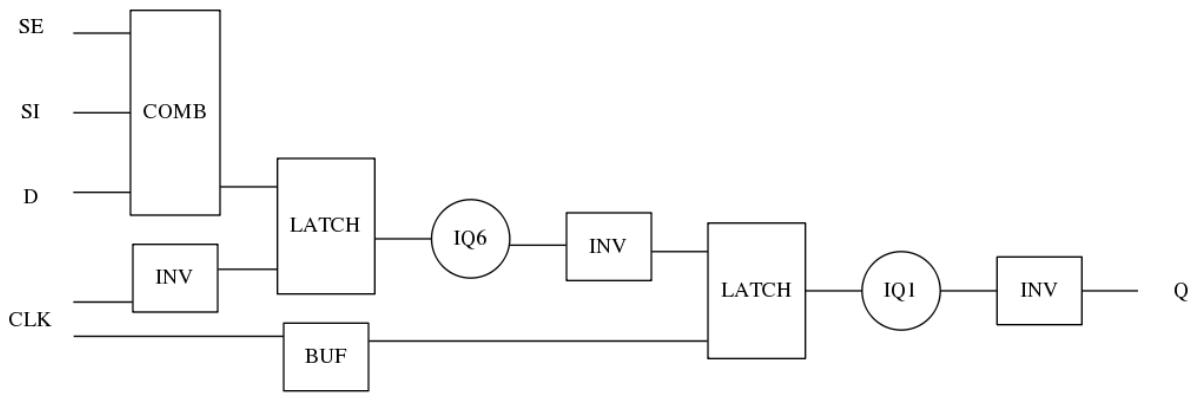

CONSTRAINTS

Constraint Pin	Related Pin	setup(ns)	hold(ns)
SE(LH)	CLK(LH)	0.4580	-0.2060
SE(LH)	CLK(LH)	0.6130	-0.1320
SE(HL)	CLK(LH)	0.5100	-0.0340
SE(HL)	CLK(LH)	0.5900	-0.3380
SI(HL)	CLK(LH)	0.5780	-0.0920
SI(HL)	CLK(LH)	0.5780	-0.0920
SI(LH)	CLK(LH)	0.5040	-0.2520
SI(LH)	CLK(LH)	0.5040	-0.2520
D(HL)	CLK(LH)	0.5840	-0.0920
D(HL)	CLK(LH)	0.5840	-0.0920
D(LH)	CLK(LH)	0.5100	-0.2580
D(LH)	CLK(LH)	0.5100	-0.2580

Constraint Pin	Related Pin	Minimum Pulse Width(ns)
CLK(HLH)	CLK(HL)	0.6810
CLK(HLH)	CLK(HL)	0.6810
CLK(HLH)	CLK(HL)	0.6810
CLK(HLH)	CLK(HL)	0.5590
CLK(HLH)	CLK(HL)	0.5650
CLK(HLH)	CLK(HL)	0.6810
CLK(HLH)	CLK(HL)	0.5590
CLK(HLH)	CLK(HL)	0.5590
CLK(LHL)	CLK(LH)	0.3490
CLK(LHL)	CLK(LH)	0.3490
CLK(LHL)	CLK(LH)	0.3490
CLK(LHL)	CLK(LH)	0.4370
CLK(LHL)	CLK(LH)	0.4370
CLK(LHL)	CLK(LH)	0.3490
CLK(LHL)	CLK(LH)	0.4370
CLK(LHL)	CLK(LH)	0.4370

PIN CAPACITANCE (pf)

Pin	Type	Capacitance (pf)
SE	input	0.0059
SI	input	0.0027
D	input	0.0028
CLK	input	0.0035

DELAY AND OUTPUT TRANSITION TIME corresponding to min slew and load

Input Pin	Output	When Condition	Tin (ns)	Out Load (pf)	Delay (ns)	Tout (ns)
CLK(LH)	Q(HL)	!D&!SE&!SI	0.0100	0.0010	0.6349	0.0360
CLK(LH)	Q(HL)	!D&!SE&SI	0.0100	0.0010	0.6349	0.0360
CLK(LH)	Q(HL)	!D&SE&!SI	0.0100	0.0010	0.6349	0.0360
CLK(LH)	Q(HL)	D&SE&!SI	0.0100	0.0010	0.6349	0.0360
CLK(LH)	Q(LH)	!D&SE&SI	0.0100	0.0010	0.5942	0.0356
CLK(LH)	Q(LH)	D&!SE&!SI	0.0100	0.0010	0.5943	0.0354
CLK(LH)	Q(LH)	D&!SE&SI	0.0100	0.0010	0.5942	0.0354
CLK(LH)	Q(LH)	D&SE&SI	0.0100	0.0010	0.5942	0.0354

DYNAMIC ENERGY

Input Pin	When Condition	Tin (ns)	Output	Out Load (pf)	Energy (uW/MHz)
CLK	!D&!SE&!SI	0.0100	Q(HL)	0.0010	0.7015
CLK	!D&!SE&SI	0.0100	Q(HL)	0.0010	0.7015
CLK	!D&SE&!SI	0.0100	Q(HL)	0.0010	0.7013
CLK	D&SE&!SI	0.0100	Q(HL)	0.0010	0.7013
CLK	!D&SE&SI	0.0100	Q(LH)	0.0010	0.6745
CLK	D&!SE&!SI	0.0100	Q(LH)	0.0010	0.6744
CLK	D&!SE&SI	0.0100	Q(LH)	0.0010	0.6742
CLK	D&SE&SI	0.0100	Q(LH)	0.0010	0.6744
D(HL)	!CLK&!SE&!SI	0.0100	n/a	n/a	0.3346
D(HL)	!CLK&SE&!SI	0.0100	n/a	n/a	0.0202
D(HL)	!CLK&!SE&SI	0.0100	n/a	n/a	0.3346
D(HL)	!CLK&SE&SI	0.0100	n/a	n/a	0.0201
D(HL)	CLK&!SE&!SI	0.0100	n/a	n/a	0.0693
D(HL)	CLK&SE&!SI	0.0100	n/a	n/a	0.0201
D(HL)	CLK&!SE&SI	0.0100	n/a	n/a	0.0693
D(HL)	CLK&SE&SI	0.0100	n/a	n/a	0.0201
SE(LH)	!CLK&!D&!SI	0.0100	n/a	n/a	0.0044
SE(LH)	!CLK&!D&SI	0.0100	n/a	n/a	0.1797
SE(LH)	CLK&!D&!SI	0.0100	n/a	n/a	0.0011
SE(LH)	CLK&!D&SI	0.0100	n/a	n/a	-0.0041
SE(LH)	!CLK&D&!SI	0.0100	n/a	n/a	0.3209
SE(LH)	!CLK&D&SI	0.0100	n/a	n/a	0.0057
SE(LH)	CLK&D&!SI	0.0100	n/a	n/a	0.0484
SE(LH)	CLK&D&SI	0.0100	n/a	n/a	0.0037
CLK(LH)	!D&!SE&!SI	0.0100	n/a	n/a	0.2156
CLK(LH)	!D&SE&!SI	0.0100	n/a	n/a	0.2156
CLK(LH)	!D&!SE&SI	0.0100	n/a	n/a	0.2157
CLK(LH)	!D&SE&SI	0.0100	n/a	n/a	0.2174
CLK(LH)	D&!SE&!SI	0.0100	n/a	n/a	0.2175
CLK(LH)	D&SE&!SI	0.0100	n/a	n/a	0.2156
CLK(LH)	D&!SE&SI	0.0100	n/a	n/a	0.2175
CLK(LH)	D&SE&SI	0.0100	n/a	n/a	0.2175
SI(LH)	!CLK&!D&!SE	0.0100	n/a	n/a	-0.0198
SI(LH)	!CLK&!D&SE	0.0100	n/a	n/a	0.1767
SI(LH)	CLK&!D&!SE	0.0100	n/a	n/a	-0.0198
SI(LH)	CLK&!D&SE	0.0100	n/a	n/a	-0.0157
SI(LH)	!CLK&D&!SE	0.0100	n/a	n/a	-0.0182
SI(LH)	!CLK&D&SE	0.0100	n/a	n/a	0.1767
SI(LH)	CLK&D&!SE	0.0100	n/a	n/a	-0.0185
SI(LH)	CLK&D&SE	0.0100	n/a	n/a	-0.0157
SE(HL)	!CLK&!D&!SI	0.0100	n/a	n/a	0.1170
SE(HL)	!CLK&!D&SI	0.0100	n/a	n/a	0.4117
SE(HL)	CLK&!D&!SI	0.0100	n/a	n/a	0.1140
SE(HL)	CLK&!D&SI	0.0100	n/a	n/a	0.1562
SE(HL)	!CLK&D&!SI	0.0100	n/a	n/a	0.3150
SE(HL)	!CLK&D&SI	0.0100	n/a	n/a	0.1182
SE(HL)	CLK&D&!SI	0.0100	n/a	n/a	0.1240
SE(HL)	CLK&D&SI	0.0100	n/a	n/a	0.1151
CLK(HL)	!D&!SE&!SI	0.0100	n/a	n/a	0.2777
CLK(HL)	!D&SE&!SI	0.0100	n/a	n/a	0.3012
CLK(HL)	!D&!SE&SI	0.0100	n/a	n/a	0.3012

continues on next page

Table 119 – continued from previous page

CLK(HL)	!D&SE&SI	0.0100	n/a	n/a	0.2952
CLK(HL)	D&!SE&!SI	0.0100	n/a	n/a	0.2953
CLK(HL)	D&SE&!SI	0.0100	n/a	n/a	0.3012
CLK(HL)	D&!SE&SI	0.0100	n/a	n/a	0.2953
CLK(HL)	D&SE&SI	0.0100	n/a	n/a	0.2952
SI(HL)	!CLK&!D&!SE	0.0100	n/a	n/a	0.0204
SI(HL)	!CLK&!D&SE	0.0100	n/a	n/a	0.3468
SI(HL)	CLK&!D&!SE	0.0100	n/a	n/a	0.0203
SI(HL)	CLK&!D&SE	0.0100	n/a	n/a	0.0702
SI(HL)	!CLK&D&!SE	0.0100	n/a	n/a	0.0201
SI(HL)	!CLK&D&SE	0.0100	n/a	n/a	0.3468
SI(HL)	CLK&D&!SE	0.0100	n/a	n/a	0.0202
SI(HL)	CLK&D&SE	0.0100	n/a	n/a	0.0702
D(LH)	!CLK&!SE&!SI	0.0100	n/a	n/a	0.1921
D(LH)	!CLK&SE&!SI	0.0100	n/a	n/a	-0.0196
D(LH)	!CLK&!SE&SI	0.0100	n/a	n/a	0.1920
D(LH)	!CLK&SE&SI	0.0100	n/a	n/a	-0.0178
D(LH)	CLK&!SE&!SI	0.0100	n/a	n/a	-0.0052
D(LH)	CLK&SE&!SI	0.0100	n/a	n/a	-0.0195
D(LH)	CLK&!SE&SI	0.0100	n/a	n/a	-0.0052
D(LH)	CLK&SE&SI	0.0100	n/a	n/a	-0.0181

LEAKAGE POWER

When Condition	Power (nW)
!CLK&!D&!SE&!SI	0.4998
!CLK&!D&!SE&SI	0.6038
!CLK&!D&SE&!SI	0.6029
!CLK&D&SE&!SI	0.6043
!CLK&!D&SE&SI	0.5843
!CLK&D&!SE&!SI	0.5863
!CLK&D&!SE&SI	0.5871
!CLK&D&SE&SI	0.5837
CLK&!D&!SE&!SI	0.4340
CLK&!D&!SE&SI	0.5778
CLK&!D&SE&!SI	0.5697
CLK&D&SE&!SI	0.5697
CLK&!D&SE&SI	0.6674
CLK&D&!SE&!SI	0.6651
CLK&D&!SE&SI	0.6650
CLK&D&SE&SI	0.6675

gf180mcu_fd_sc_mcu7t5v0__sdffq_4

gf180mcu_fd_sc_mcu7t5v0__sdffq_4 symbol

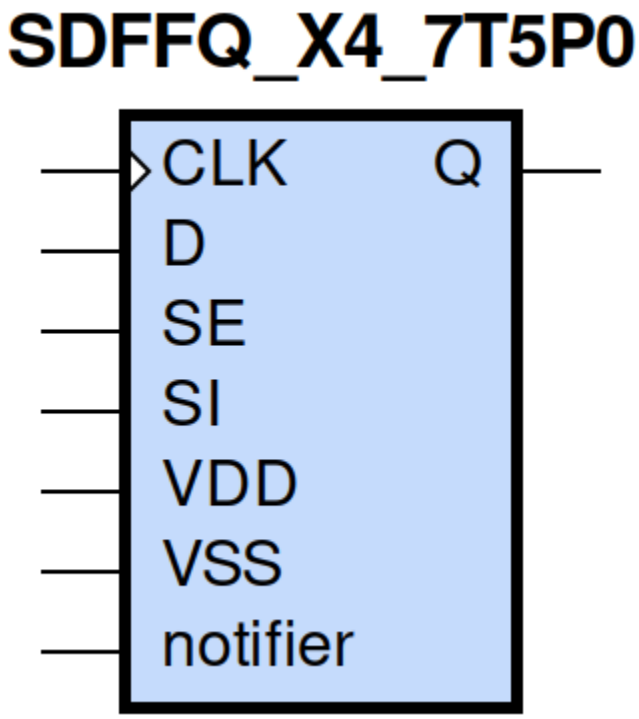

gf180mcu_fd_sc_mcu7t5v0__sdffq_4 schematic

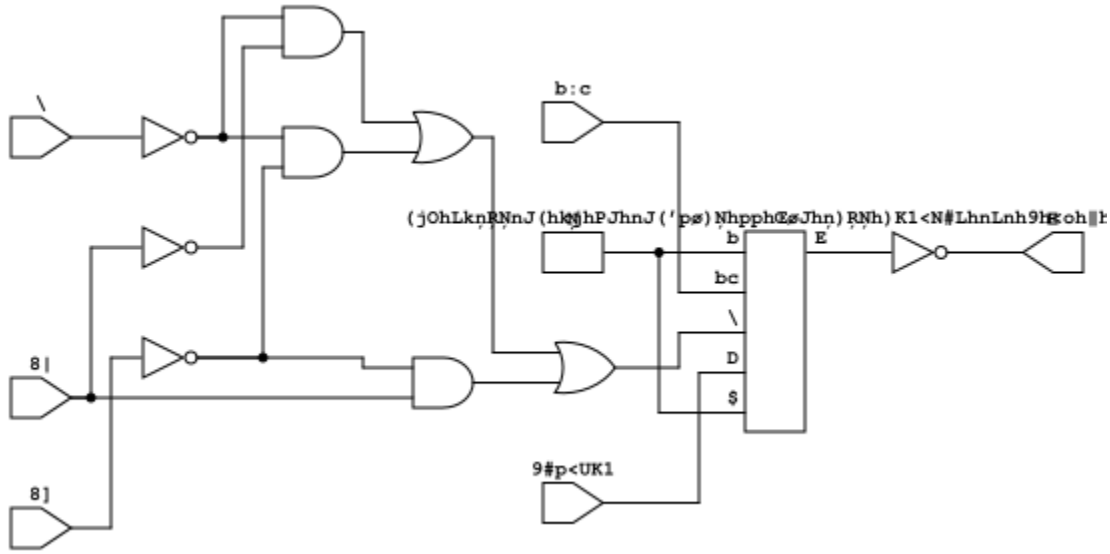

gf180mcu_fd_sc_mcu7t5v0__sdffq_4 layout

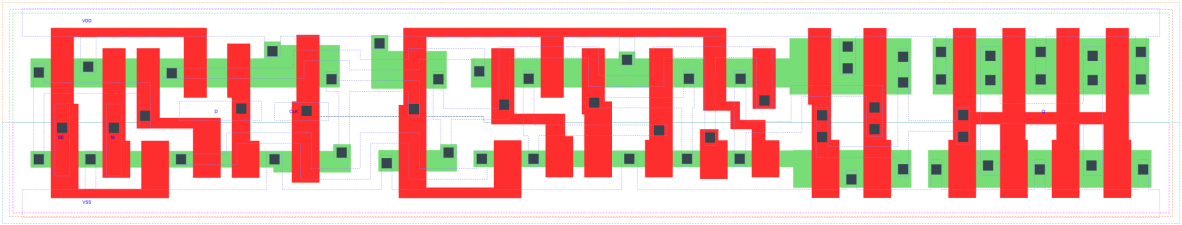

SDFFQ_X4 is a positive edge triggered scan D-type flip flop, 4X drive strength

Attributes

Attribute	Value
area	96.588800 μm^2

TRUTH TABLE

Input				Output
SE	SI	D	CLK	Q
L	X	L	↑	L
L	X	H	↑	H
H	L	X	↑	L
H	H	X	↑	H

FUNCTIONAL SCHEMATIC

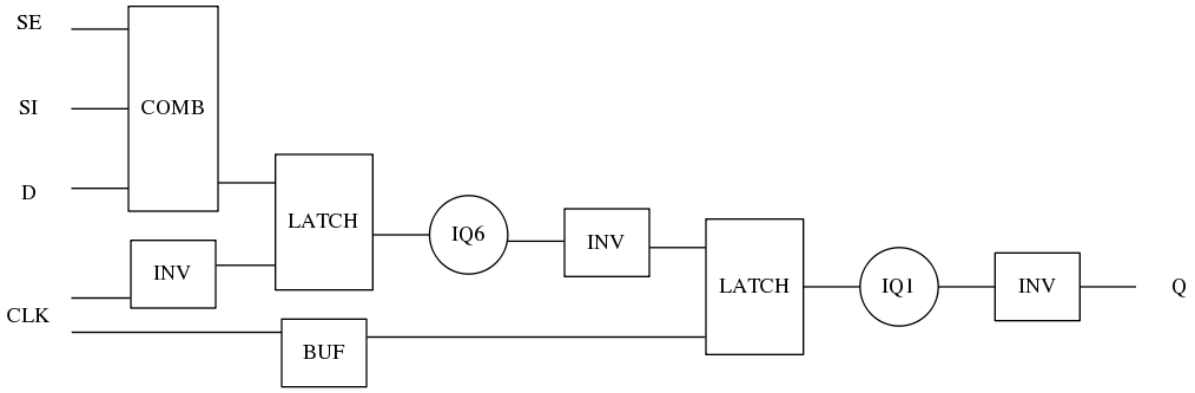

CONSTRAINTS

Constraint Pin	Related Pin	setup(ns)	hold(ns)
SE(LH)	CLK(LH)	0.4580	-0.2060
SE(LH)	CLK(LH)	0.6130	-0.1260
SE(HL)	CLK(LH)	0.5100	-0.0340
SE(HL)	CLK(LH)	0.5900	-0.3320
SI(HL)	CLK(LH)	0.5780	-0.0920
SI(HL)	CLK(LH)	0.5780	-0.0920
SI(LH)	CLK(LH)	0.5040	-0.2520
SI(LH)	CLK(LH)	0.5040	-0.2520
D(HL)	CLK(LH)	0.5780	-0.0920
D(HL)	CLK(LH)	0.5780	-0.0920
D(LH)	CLK(LH)	0.5100	-0.2580
D(LH)	CLK(LH)	0.5100	-0.2580

Constraint Pin	Related Pin	Minimum Pulse Width(ns)
CLK(HLH)	CLK(HL)	0.6810
CLK(HLH)	CLK(HL)	0.6810
CLK(HLH)	CLK(HL)	0.6750
CLK(HLH)	CLK(HL)	0.5650
CLK(HLH)	CLK(HL)	0.5590
CLK(HLH)	CLK(HL)	0.6810
CLK(HLH)	CLK(HL)	0.5650
CLK(HLH)	CLK(HL)	0.5650
CLK(LHL)	CLK(LH)	0.3780
CLK(LHL)	CLK(LH)	0.3780
CLK(LHL)	CLK(LH)	0.3780
CLK(LHL)	CLK(LH)	0.4850
CLK(LHL)	CLK(LH)	0.4850
CLK(LHL)	CLK(LH)	0.3780
CLK(LHL)	CLK(LH)	0.4850
CLK(LHL)	CLK(LH)	0.4850

PIN CAPACITANCE (pf)

Pin	Type	Capacitance (pf)
SE	input	0.0059
SI	input	0.0027
D	input	0.0028
CLK	input	0.0035

DELAY AND OUTPUT TRANSITION TIME corresponding to min slew and load

Input Pin	Output	When Condition	Tin (ns)	Out Load (pf)	Delay (ns)	Tout (ns)
CLK(LH)	Q(HL)	!D&!SE&!SI	0.0100	0.0010	0.7000	0.0451
CLK(LH)	Q(HL)	!D&!SE&SI	0.0100	0.0010	0.6999	0.0452
CLK(LH)	Q(HL)	!D&SE&!SI	0.0100	0.0010	0.6999	0.0452
CLK(LH)	Q(HL)	D&SE&!SI	0.0100	0.0010	0.6998	0.0452
CLK(LH)	Q(LH)	!D&SE&SI	0.0100	0.0010	0.6618	0.0402
CLK(LH)	Q(LH)	D&!SE&!SI	0.0100	0.0010	0.6618	0.0401
CLK(LH)	Q(LH)	D&!SE&SI	0.0100	0.0010	0.6618	0.0401
CLK(LH)	Q(LH)	D&SE&SI	0.0100	0.0010	0.6618	0.0402

DYNAMIC ENERGY

Input Pin	When Condition	Tin (ns)	Output	Out Load (pf)	Energy (uW/MHz)
CLK	!D&!SE&!SI	0.0100	Q(HL)	0.0010	1.0390
CLK	!D&!SE&SI	0.0100	Q(HL)	0.0010	1.0388
CLK	!D&SE&!SI	0.0100	Q(HL)	0.0010	1.0386
CLK	D&SE&!SI	0.0100	Q(HL)	0.0010	1.0385
CLK	!D&SE&SI	0.0100	Q(LH)	0.0010	0.9503
CLK	D&!SE&!SI	0.0100	Q(LH)	0.0010	0.9506
CLK	D&!SE&SI	0.0100	Q(LH)	0.0010	0.9506
CLK	D&SE&SI	0.0100	Q(LH)	0.0010	0.9503
D(HL)	!CLK&!SE&!SI	0.0100	n/a	n/a	0.3347
D(HL)	!CLK&SE&!SI	0.0100	n/a	n/a	0.0203
D(HL)	!CLK&!SE&SI	0.0100	n/a	n/a	0.3346
D(HL)	!CLK&SE&SI	0.0100	n/a	n/a	0.0201
D(HL)	CLK&!SE&!SI	0.0100	n/a	n/a	0.0692
D(HL)	CLK&SE&!SI	0.0100	n/a	n/a	0.0201
D(HL)	CLK&!SE&SI	0.0100	n/a	n/a	0.0693
D(HL)	CLK&SE&SI	0.0100	n/a	n/a	0.0202
SE(LH)	!CLK&!D&!SI	0.0100	n/a	n/a	0.0045
SE(LH)	!CLK&!D&SI	0.0100	n/a	n/a	0.1793
SE(LH)	CLK&!D&!SI	0.0100	n/a	n/a	0.0011
SE(LH)	CLK&!D&SI	0.0100	n/a	n/a	-0.0041
SE(LH)	!CLK&D&!SI	0.0100	n/a	n/a	0.3209
SE(LH)	!CLK&D&SI	0.0100	n/a	n/a	0.0057
SE(LH)	CLK&D&!SI	0.0100	n/a	n/a	0.0484
SE(LH)	CLK&D&SI	0.0100	n/a	n/a	0.0037
CLK(LH)	!D&!SE&!SI	0.0100	n/a	n/a	0.2153
CLK(LH)	!D&SE&!SI	0.0100	n/a	n/a	0.2153
CLK(LH)	!D&!SE&SI	0.0100	n/a	n/a	0.2154
CLK(LH)	!D&SE&SI	0.0100	n/a	n/a	0.2172
CLK(LH)	D&!SE&!SI	0.0100	n/a	n/a	0.2170
CLK(LH)	D&SE&!SI	0.0100	n/a	n/a	0.2152

continues on next page

Table 120 – continued from previous page

CLK(LH)	D&!SE&SI	0.0100	n/a	n/a	0.2171
CLK(LH)	D&SE&SI	0.0100	n/a	n/a	0.2172
SI(LH)	!CLK&!D&!SE	0.0100	n/a	n/a	-0.0198
SI(LH)	!CLK&!D&SE	0.0100	n/a	n/a	0.1763
SI(LH)	CLK&!D&!SE	0.0100	n/a	n/a	-0.0198
SI(LH)	CLK&!D&SE	0.0100	n/a	n/a	-0.0157
SI(LH)	!CLK&D&!SE	0.0100	n/a	n/a	-0.0183
SI(LH)	!CLK&D&SE	0.0100	n/a	n/a	0.1763
SI(LH)	CLK&D&!SE	0.0100	n/a	n/a	-0.0185
SI(LH)	CLK&D&SE	0.0100	n/a	n/a	-0.0157
SE(HL)	!CLK&!D&!SI	0.0100	n/a	n/a	0.1170
SE(HL)	!CLK&!D&SI	0.0100	n/a	n/a	0.4119
SE(HL)	CLK&!D&!SI	0.0100	n/a	n/a	0.1141
SE(HL)	CLK&!D&SI	0.0100	n/a	n/a	0.1563
SE(HL)	!CLK&D&!SI	0.0100	n/a	n/a	0.3146
SE(HL)	!CLK&D&SI	0.0100	n/a	n/a	0.1183
SE(HL)	CLK&D&!SI	0.0100	n/a	n/a	0.1241
SE(HL)	CLK&D&SI	0.0100	n/a	n/a	0.1151
CLK(HL)	!D&!SE&!SI	0.0100	n/a	n/a	0.3005
CLK(HL)	!D&SE&!SI	0.0100	n/a	n/a	0.3007
CLK(HL)	!D&!SE&SI	0.0100	n/a	n/a	0.3006
CLK(HL)	!D&SE&SI	0.0100	n/a	n/a	0.2952
CLK(HL)	D&!SE&!SI	0.0100	n/a	n/a	0.2757
CLK(HL)	D&SE&!SI	0.0100	n/a	n/a	0.3006
CLK(HL)	D&!SE&SI	0.0100	n/a	n/a	0.2953
CLK(HL)	D&SE&SI	0.0100	n/a	n/a	0.2952
SI(HL)	!CLK&!D&!SE	0.0100	n/a	n/a	0.0204
SI(HL)	!CLK&!D&SE	0.0100	n/a	n/a	0.3469
SI(HL)	CLK&!D&!SE	0.0100	n/a	n/a	0.0203
SI(HL)	CLK&!D&SE	0.0100	n/a	n/a	0.0703
SI(HL)	!CLK&D&!SE	0.0100	n/a	n/a	0.0202
SI(HL)	!CLK&D&SE	0.0100	n/a	n/a	0.3469
SI(HL)	CLK&D&!SE	0.0100	n/a	n/a	0.0202
SI(HL)	CLK&D&SE	0.0100	n/a	n/a	0.0703
D(LH)	!CLK&!SE&!SI	0.0100	n/a	n/a	0.1917
D(LH)	!CLK&SE&!SI	0.0100	n/a	n/a	-0.0195
D(LH)	!CLK&!SE&SI	0.0100	n/a	n/a	0.1916
D(LH)	!CLK&SE&SI	0.0100	n/a	n/a	-0.0178
D(LH)	CLK&!SE&!SI	0.0100	n/a	n/a	-0.0052
D(LH)	CLK&SE&!SI	0.0100	n/a	n/a	-0.0196
D(LH)	CLK&!SE&SI	0.0100	n/a	n/a	-0.0052
D(LH)	CLK&SE&SI	0.0100	n/a	n/a	-0.0181

LEAKAGE POWER

When Condition	Power (nW)
!CLK&!D&!SE&!SI	0.6553
!CLK&!D&!SE&SI	0.6567
!CLK&!D&SE&!SI	0.6558
!CLK&D&SE&!SI	0.6573
!CLK&!D&SE&SI	0.6346
!CLK&D&!SE&!SI	0.5528
!CLK&D&!SE&SI	0.6372
!CLK&D&SE&SI	0.6346
CLK&!D&!SE&!SI	0.5629
CLK&!D&!SE&SI	0.5630
CLK&!D&SE&!SI	0.5547
CLK&D&SE&!SI	0.5547
CLK&!D&SE&SI	0.7174
CLK&D&!SE&!SI	0.5425
CLK&D&!SE&SI	0.7151
CLK&D&SE&SI	0.7174

gf180mcu_fd_sc_mcu7t5v0__sdffrnq_1

gf180mcu_fd_sc_mcu7t5v0__sdffrnq_1 symbol

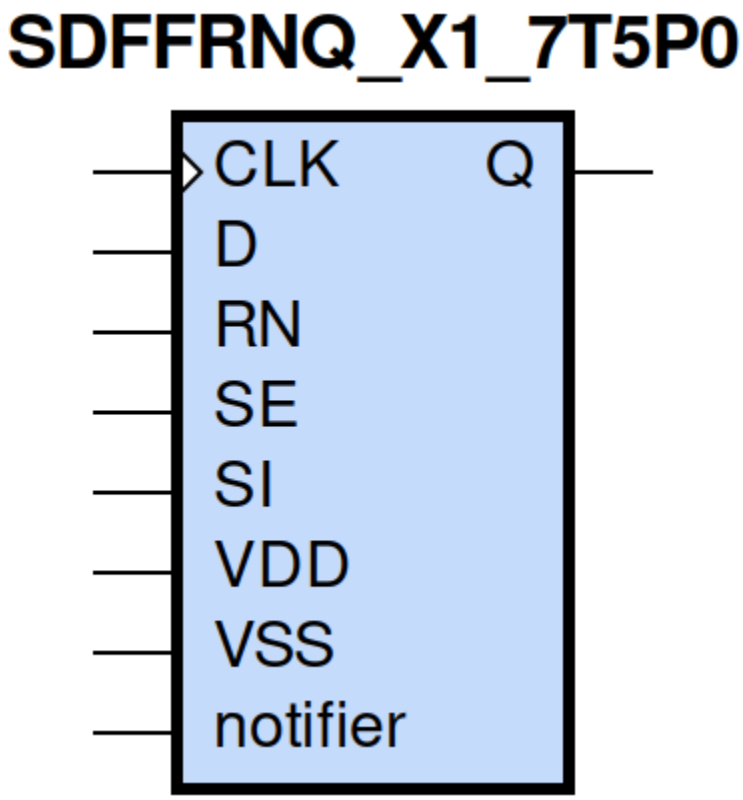

gf180mcu_fd_sc_mcu7t5v0__sdffrnq_1 schematic

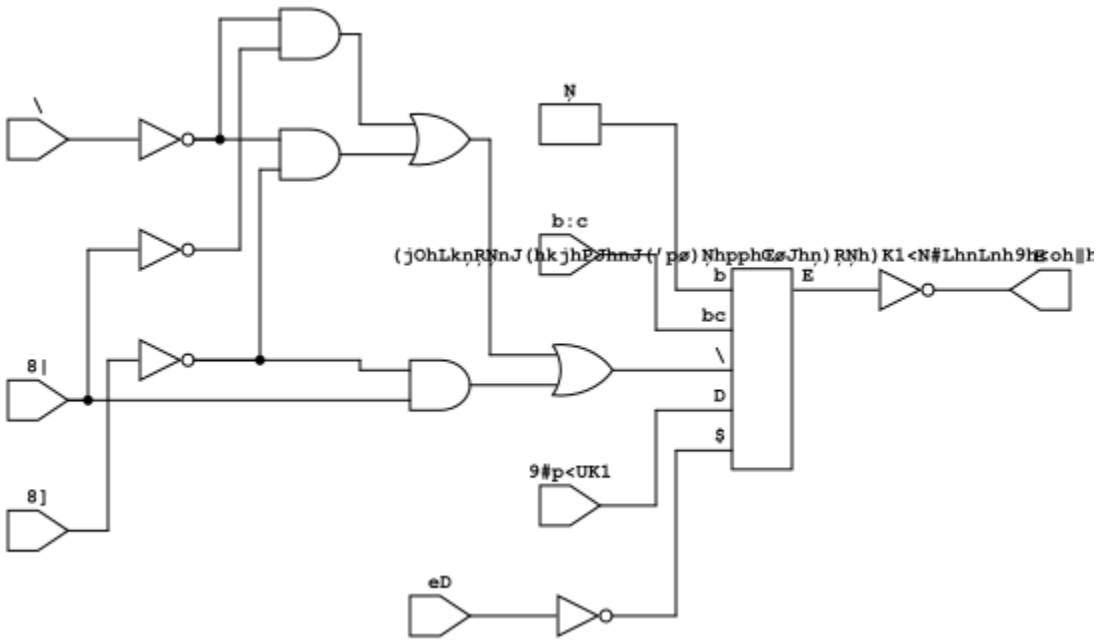

gf180mcu_fd_sc_mcu7t5v0__sdffrnq_1 layout

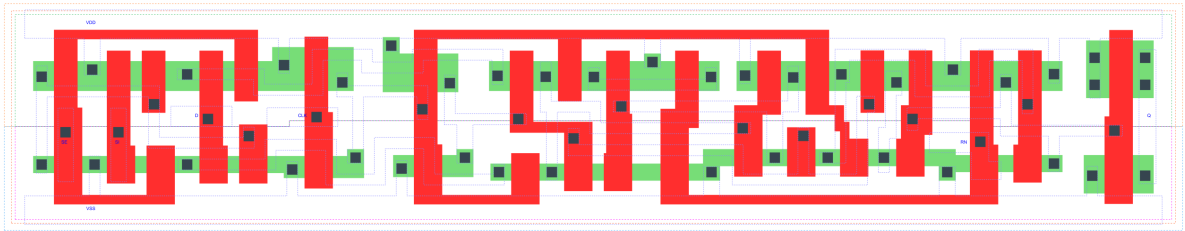

SDFFRNQ_X1 is a positive edge triggered scan D-type flip flop, active low reset, 1X drive strength

Attributes

Attribute	Value
area	94.393600 μm^2

TRUTH TABLE

Input					Output
RN	SE	SI	D	CLK	Q
H	L	X	L	↑	L
H	L	X	H	↑	H
H	H	L	X	↑	L
H	H	H	X	↑	H
L	X	X	X	X	L

FUNCTIONAL SCHEMATIC

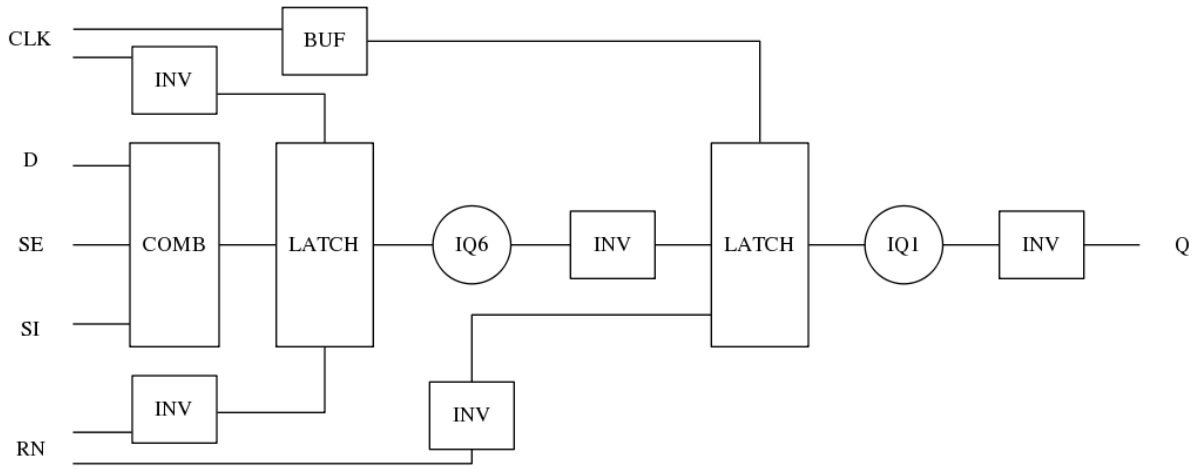

CONSTRAINTS

Constraint Pin	Related Pin	setup(ns)	hold(ns)
SE(LH)	CLK(LH)	0.5550	-0.2630
SE(LH)	CLK(LH)	0.7330	-0.1030
SE(HL)	CLK(LH)	0.6240	-0.0630
SE(HL)	CLK(LH)	0.6300	-0.3660
SI(HL)	CLK(LH)	0.6980	-0.0970
SI(HL)	CLK(LH)	0.6980	-0.0630
SI(LH)	CLK(LH)	0.6010	-0.3090
SI(LH)	CLK(LH)	0.5840	-0.3030
D(HL)	CLK(LH)	0.6070	-0.0520
D(HL)	CLK(LH)	0.6070	-0.0520
D(LH)	CLK(LH)	0.5210	-0.2520
D(LH)	CLK(LH)	0.5210	-0.2520

Constraint Pin	Related Pin	recovery(ns)	removal(ns)
RN(LH)	CLK(LH)	-0.2290	0.3890
RN(LH)	CLK(LH)	-0.2290	0.3890
RN(LH)	CLK(LH)	-0.2290	0.3890
RN(LH)	CLK(LH)	-0.2290	0.3890

Constraint Pin	Related Pin	Minimum Pulse Width(ns)
CLK(HLH)	CLK(HL)	0.7110
CLK(HLH)	CLK(HL)	0.7300
CLK(HLH)	CLK(HL)	0.7110
CLK(HLH)	CLK(HL)	0.6500
CLK(HLH)	CLK(HL)	0.5710
CLK(HLH)	CLK(HL)	0.7910
CLK(HLH)	CLK(HL)	0.5710
CLK(HLH)	CLK(HL)	0.6140
CLK(LHL)	CLK(LH)	0.3980
CLK(LHL)	CLK(LH)	0.3980
CLK(LHL)	CLK(LH)	0.3980
CLK(LHL)	CLK(LH)	0.4460
CLK(LHL)	CLK(LH)	0.4460
CLK(LHL)	CLK(LH)	0.3980
CLK(LHL)	CLK(LH)	0.4460
CLK(LHL)	CLK(LH)	0.4460
RN(HLH)	RN(HL)	0.3680
RN(HLH)	RN(HL)	0.3680
RN(HLH)	RN(HL)	0.3680
RN(HLH)	RN(HL)	0.3680
RN(HLH)	RN(HL)	0.4370
RN(HLH)	RN(HL)	0.4370
RN(HLH)	RN(HL)	0.4370
RN(HLH)	RN(HL)	0.4370
RN(HLH)	RN(HL)	0.3680
RN(HLH)	RN(HL)	0.3680
RN(HLH)	RN(HL)	0.3680
RN(HLH)	RN(HL)	0.4370
RN(HLH)	RN(HL)	0.4370
RN(HLH)	RN(HL)	0.4370
RN(HLH)	RN(HL)	0.4370
RN(HLH)	RN(HL)	0.3680

PIN CAPACITANCE (pf)

Pin	Type	Capacitance (pf)
SE	input	0.0061
SI	input	0.0027
D	input	0.0028
CLK	input	0.0036
RN	input	0.0061

DELAY AND OUTPUT TRANSITION TIME corresponding to min slew and load

Input Pin	Output	When Condition	Tin (ns)	Out Load (pf)	Delay (ns)	Tout (ns)
CLK(LH)	Q(HL)	!D&RN&!SE&!SI	0.0100	0.0010	0.6591	0.0475
CLK(LH)	Q(HL)	!D&RN&!SE&SI	0.0100	0.0010	0.6591	0.0474
CLK(LH)	Q(HL)	!D&RN&SE&!SI	0.0100	0.0010	0.6590	0.0475
CLK(LH)	Q(HL)	D&RN&SE&!SI	0.0100	0.0010	0.6590	0.0475
CLK(LH)	Q(LH)	!D&RN&SE&SI	0.0100	0.0010	0.6988	0.0576
CLK(LH)	Q(LH)	D&RN&!SE&!SI	0.0100	0.0010	0.6988	0.0574
CLK(LH)	Q(LH)	D&RN&!SE&SI	0.0100	0.0010	0.6988	0.0576
CLK(LH)	Q(LH)	D&RN&SE&SI	0.0100	0.0010	0.6988	0.0576
RN(HL)	Q(HL)	!CLK&!D&!SE&!SI	0.0100	0.0010	0.2371	0.0483
RN(HL)	Q(HL)	!CLK&D&SE&!SI	0.0100	0.0010	0.2371	0.0483
RN(HL)	Q(HL)	!CLK&D&!SE&SI	0.0100	0.0010	0.2370	0.0483
RN(HL)	Q(HL)	!CLK&D&SE&SI	0.0100	0.0010	0.2370	0.0483
RN(HL)	Q(HL)	CLK&D&!SE&!SI	0.0100	0.0010	0.2372	0.0483
RN(HL)	Q(HL)	CLK&D&SE&!SI	0.0100	0.0010	0.2372	0.0483
RN(HL)	Q(HL)	CLK&D&!SE&SI	0.0100	0.0010	0.2372	0.0483
RN(HL)	Q(HL)	CLK&D&SE&SI	0.0100	0.0010	0.2372	0.0483
RN(HL)	Q(HL)	!CLK&!D&SE&!SI	0.0100	0.0010	0.2371	0.0483
RN(HL)	Q(HL)	!CLK&!D&!SE&SI	0.0100	0.0010	0.2371	0.0483
RN(HL)	Q(HL)	!CLK&!D&SE&SI	0.0100	0.0010	0.2370	0.0483
RN(HL)	Q(HL)	CLK&!D&!SE&!SI	0.0100	0.0010	0.2372	0.0483
RN(HL)	Q(HL)	CLK&!D&SE&!SI	0.0100	0.0010	0.2372	0.0483
RN(HL)	Q(HL)	CLK&!D&!SE&SI	0.0100	0.0010	0.2372	0.0483
RN(HL)	Q(HL)	CLK&!D&SE&SI	0.0100	0.0010	0.2372	0.0483
RN(HL)	Q(HL)	!CLK&D&!SE&!SI	0.0100	0.0010	0.2370	0.0483

DYNAMIC ENERGY

Input Pin	When Condition	Tin (ns)	Output	Out Load (pf)	Energy (uW/MHz)
CLK	!D&RN&!SE&!SI	0.0100	Q(HL)	0.0010	0.5793
CLK	!D&RN&!SE&SI	0.0100	Q(HL)	0.0010	0.5793
CLK	!D&RN&SE&!SI	0.0100	Q(HL)	0.0010	0.5796
CLK	D&RN&SE&!SI	0.0100	Q(HL)	0.0010	0.5795
CLK	!D&RN&SE&SI	0.0100	Q(LH)	0.0010	0.6190

continues on next page

Table 122 – continued from previous page

CLK	D&RN&!SE&!SI	0.0100	Q(LH)	0.0010	0.6190
CLK	D&RN&!SE&SI	0.0100	Q(LH)	0.0010	0.6190
CLK	D&RN&SE&SI	0.0100	Q(LH)	0.0010	0.6188
RN	!CLK&!D&!SE&!SI	0.0100	Q(HL)	0.0010	0.3683
RN	!CLK&D&SE&!SI	0.0100	Q(HL)	0.0010	0.3682
RN	!CLK&D&!SE&SI	0.0100	Q(HL)	0.0010	0.3843
RN	!CLK&D&SE&SI	0.0100	Q(HL)	0.0010	0.3843
RN	CLK&D&!SE&!SI	0.0100	Q(HL)	0.0010	0.5953
RN	CLK&D&SE&!SI	0.0100	Q(HL)	0.0010	0.5954
RN	CLK&D&!SE&SI	0.0100	Q(HL)	0.0010	0.5953
RN	CLK&D&SE&SI	0.0100	Q(HL)	0.0010	0.5953
RN	!CLK&!D&SE&!SI	0.0100	Q(HL)	0.0010	0.3682
RN	!CLK&!D&!SE&SI	0.0100	Q(HL)	0.0010	0.3683
RN	!CLK&!D&SE&SI	0.0100	Q(HL)	0.0010	0.3843
RN	CLK&!D&!SE&!SI	0.0100	Q(HL)	0.0010	0.5954
RN	CLK&!D&SE&!SI	0.0100	Q(HL)	0.0010	0.5953
RN	CLK&!D&!SE&SI	0.0100	Q(HL)	0.0010	0.5954
RN	CLK&!D&SE&SI	0.0100	Q(HL)	0.0010	0.5953
RN	!CLK&D&!SE&!SI	0.0100	Q(HL)	0.0010	0.3843
D(HL)	!CLK&!RN&!SE&!SI	0.0100	n/a	n/a	0.3511
D(HL)	!CLK&!RN&!SE&SI	0.0100	n/a	n/a	0.3511
D(HL)	!CLK&!RN&SE&!SI	0.0100	n/a	n/a	0.0203
D(HL)	!CLK&!RN&SE&SI	0.0100	n/a	n/a	0.0100
D(HL)	CLK&!RN&!SE&!SI	0.0100	n/a	n/a	0.0245
D(HL)	CLK&!RN&!SE&SI	0.0100	n/a	n/a	0.0245
D(HL)	CLK&!RN&SE&!SI	0.0100	n/a	n/a	0.0236
D(HL)	CLK&!RN&SE&SI	0.0100	n/a	n/a	0.0095
D(HL)	CLK&RN&!SE&!SI	0.0100	n/a	n/a	0.0568
D(HL)	CLK&RN&SE&!SI	0.0100	n/a	n/a	0.0202
D(HL)	CLK&RN&!SE&SI	0.0100	n/a	n/a	0.0568
D(HL)	CLK&RN&SE&SI	0.0100	n/a	n/a	0.0091
D(HL)	!CLK&RN&!SE&!SI	0.0100	n/a	n/a	0.3386
D(HL)	!CLK&RN&SE&!SI	0.0100	n/a	n/a	0.0203
D(HL)	!CLK&RN&!SE&SI	0.0100	n/a	n/a	0.3386
D(HL)	!CLK&RN&SE&SI	0.0100	n/a	n/a	0.0100
SE(LH)	!CLK&!D&!RN&!SI	0.0100	n/a	n/a	0.0025
SE(LH)	!CLK&!D&!RN&SI	0.0100	n/a	n/a	0.2023
SE(LH)	!CLK&D&!RN&!SI	0.0100	n/a	n/a	0.3723
SE(LH)	!CLK&D&!RN&SI	0.0100	n/a	n/a	-0.0060
SE(LH)	CLK&!D&!RN&!SI	0.0100	n/a	n/a	0.0013
SE(LH)	CLK&!D&!RN&SI	0.0100	n/a	n/a	-0.0048
SE(LH)	CLK&D&!RN&!SI	0.0100	n/a	n/a	0.0036
SE(LH)	CLK&D&!RN&SI	0.0100	n/a	n/a	-0.0080
SE(LH)	!CLK&D&RN&!SI	0.0100	n/a	n/a	0.3593
SE(LH)	!CLK&D&RN&SI	0.0100	n/a	n/a	-0.0060
SE(LH)	CLK&D&RN&!SI	0.0100	n/a	n/a	0.0400
SE(LH)	CLK&D&RN&SI	0.0100	n/a	n/a	-0.0076
SE(LH)	!CLK&!D&RN&!SI	0.0100	n/a	n/a	0.0025
SE(LH)	!CLK&!D&RN&SI	0.0100	n/a	n/a	0.2081
SE(LH)	CLK&!D&RN&!SI	0.0100	n/a	n/a	0.0013
SE(LH)	CLK&!D&RN&SI	0.0100	n/a	n/a	-0.0048
CLK(LH)	!D&!RN&!SE&!SI	0.0100	n/a	n/a	0.2290

continues on next page

Table 122 – continued from previous page

CLK(LH)	!D&!RN&!SE&SI	0.0100	n/a	n/a	0.2290
CLK(LH)	!D&!RN&SE&!SI	0.0100	n/a	n/a	0.2289
CLK(LH)	!D&!RN&SE&SI	0.0100	n/a	n/a	0.4807
CLK(LH)	D&!RN&!SE&!SI	0.0100	n/a	n/a	0.4807
CLK(LH)	D&!RN&!SE&SI	0.0100	n/a	n/a	0.4806
CLK(LH)	D&!RN&SE&!SI	0.0100	n/a	n/a	0.2289
CLK(LH)	D&!RN&SE&SI	0.0100	n/a	n/a	0.4806
CLK(LH)	D&RN&!SE&!SI	0.0100	n/a	n/a	0.2239
CLK(LH)	D&RN&SE&!SI	0.0100	n/a	n/a	0.2289
CLK(LH)	D&RN&!SE&SI	0.0100	n/a	n/a	0.2239
CLK(LH)	D&RN&SE&SI	0.0100	n/a	n/a	0.2240
CLK(LH)	!D&RN&!SE&!SI	0.0100	n/a	n/a	0.2289
CLK(LH)	!D&RN&SE&!SI	0.0100	n/a	n/a	0.2289
CLK(LH)	!D&RN&!SE&SI	0.0100	n/a	n/a	0.2290
CLK(LH)	!D&RN&SE&SI	0.0100	n/a	n/a	0.2240
SI(LH)	!CLK&!D&!RN&!SE	0.0100	n/a	n/a	-0.0198
SI(LH)	!CLK&!D&!RN&SE	0.0100	n/a	n/a	0.2014
SI(LH)	!CLK&D&!RN&!SE	0.0100	n/a	n/a	-0.0183
SI(LH)	!CLK&D&!RN&SE	0.0100	n/a	n/a	0.1884
SI(LH)	CLK&!D&!RN&!SE	0.0100	n/a	n/a	-0.0198
SI(LH)	CLK&!D&!RN&SE	0.0100	n/a	n/a	-0.0158
SI(LH)	CLK&D&!RN&!SE	0.0100	n/a	n/a	-0.0188
SI(LH)	CLK&D&!RN&SE	0.0100	n/a	n/a	-0.0158
SI(LH)	!CLK&D&RN&!SE	0.0100	n/a	n/a	-0.0183
SI(LH)	!CLK&D&RN&SE	0.0100	n/a	n/a	0.1941
SI(LH)	CLK&D&RN&!SE	0.0100	n/a	n/a	-0.0184
SI(LH)	CLK&D&RN&SE	0.0100	n/a	n/a	-0.0158
SI(LH)	!CLK&!D&RN&!SE	0.0100	n/a	n/a	-0.0198
SI(LH)	!CLK&!D&RN&SE	0.0100	n/a	n/a	0.2072
SI(LH)	CLK&!D&RN&!SE	0.0100	n/a	n/a	-0.0198
SI(LH)	CLK&!D&RN&SE	0.0100	n/a	n/a	-0.0158
SE(HL)	!CLK&!D&!RN&!SI	0.0100	n/a	n/a	0.1316
SE(HL)	!CLK&!D&!RN&SI	0.0100	n/a	n/a	0.4774
SE(HL)	!CLK&D&!RN&!SI	0.0100	n/a	n/a	0.3297
SE(HL)	!CLK&D&!RN&SI	0.0100	n/a	n/a	0.1337
SE(HL)	CLK&!D&!RN&!SI	0.0100	n/a	n/a	0.1363
SE(HL)	CLK&!D&!RN&SI	0.0100	n/a	n/a	0.1354
SE(HL)	CLK&D&!RN&!SI	0.0100	n/a	n/a	0.1354
SE(HL)	CLK&D&!RN&SI	0.0100	n/a	n/a	0.1383
SE(HL)	!CLK&D&RN&!SI	0.0100	n/a	n/a	0.3356
SE(HL)	!CLK&D&RN&SI	0.0100	n/a	n/a	0.1338
SE(HL)	CLK&D&RN&!SI	0.0100	n/a	n/a	0.1368
SE(HL)	CLK&D&RN&SI	0.0100	n/a	n/a	0.1337
SE(HL)	!CLK&!D&RN&!SI	0.0100	n/a	n/a	0.1316
SE(HL)	!CLK&!D&RN&SI	0.0100	n/a	n/a	0.4649
SE(HL)	CLK&!D&RN&!SI	0.0100	n/a	n/a	0.1316
SE(HL)	CLK&!D&RN&SI	0.0100	n/a	n/a	0.1835
CLK(HL)	!D&!RN&!SE&!SI	0.0100	n/a	n/a	0.3422
CLK(HL)	!D&!RN&!SE&SI	0.0100	n/a	n/a	0.3422
CLK(HL)	!D&!RN&SE&!SI	0.0100	n/a	n/a	0.3615
CLK(HL)	!D&!RN&SE&SI	0.0100	n/a	n/a	0.4923
CLK(HL)	D&!RN&!SE&!SI	0.0100	n/a	n/a	0.4628

continues on next page

Table 122 – continued from previous page

CLK(HL)	D&!RN&!SE&SI	0.0100	n/a	n/a	0.4628
CLK(HL)	D&!RN&SE&!SI	0.0100	n/a	n/a	0.3841
CLK(HL)	D&!RN&SE&SI	0.0100	n/a	n/a	0.4775
CLK(HL)	D&RN&!SE&!SI	0.0100	n/a	n/a	0.2817
CLK(HL)	D&RN&SE&!SI	0.0100	n/a	n/a	0.2822
CLK(HL)	D&RN&!SE&SI	0.0100	n/a	n/a	0.2817
CLK(HL)	D&RN&SE&SI	0.0100	n/a	n/a	0.2816
CLK(HL)	!D&RN&!SE&!SI	0.0100	n/a	n/a	0.2822
CLK(HL)	!D&RN&SE&!SI	0.0100	n/a	n/a	0.2823
CLK(HL)	!D&RN&!SE&SI	0.0100	n/a	n/a	0.2822
CLK(HL)	!D&RN&SE&SI	0.0100	n/a	n/a	0.2816
SI(HL)	!CLK&!D&!RN&!SE	0.0100	n/a	n/a	0.0203
SI(HL)	!CLK&!D&!RN&SE	0.0100	n/a	n/a	0.4051
SI(HL)	!CLK&D&!RN&!SE	0.0100	n/a	n/a	0.0202
SI(HL)	!CLK&D&!RN&SE	0.0100	n/a	n/a	0.4127
SI(HL)	CLK&!D&!RN&!SE	0.0100	n/a	n/a	0.0202
SI(HL)	CLK&!D&!RN&SE	0.0100	n/a	n/a	0.0217
SI(HL)	CLK&D&!RN&!SE	0.0100	n/a	n/a	0.0202
SI(HL)	CLK&D&!RN&SE	0.0100	n/a	n/a	0.0217
SI(HL)	!CLK&D&RN&!SE	0.0100	n/a	n/a	0.0202
SI(HL)	!CLK&D&RN&SE	0.0100	n/a	n/a	0.3997
SI(HL)	CLK&D&RN&!SE	0.0100	n/a	n/a	0.0201
SI(HL)	CLK&D&RN&SE	0.0100	n/a	n/a	0.0730
SI(HL)	!CLK&!D&RN&!SE	0.0100	n/a	n/a	0.0203
SI(HL)	!CLK&!D&RN&SE	0.0100	n/a	n/a	0.3922
SI(HL)	CLK&!D&RN&!SE	0.0100	n/a	n/a	0.0202
SI(HL)	CLK&!D&RN&SE	0.0100	n/a	n/a	0.0877
D(LH)	!CLK&!RN&!SE&!SI	0.0100	n/a	n/a	0.1773
D(LH)	!CLK&!RN&!SE&SI	0.0100	n/a	n/a	0.1773
D(LH)	!CLK&!RN&SE&!SI	0.0100	n/a	n/a	-0.0186
D(LH)	!CLK&!RN&SE&SI	0.0100	n/a	n/a	-0.0064
D(LH)	CLK&!RN&!SE&!SI	0.0100	n/a	n/a	-0.0154
D(LH)	CLK&!RN&!SE&SI	0.0100	n/a	n/a	-0.0154
D(LH)	CLK&!RN&SE&!SI	0.0100	n/a	n/a	-0.0197
D(LH)	CLK&!RN&SE&SI	0.0100	n/a	n/a	-0.0122
D(LH)	CLK&RN&!SE&!SI	0.0100	n/a	n/a	-0.0155
D(LH)	CLK&RN&SE&!SI	0.0100	n/a	n/a	-0.0197
D(LH)	CLK&RN&!SE&SI	0.0100	n/a	n/a	-0.0154
D(LH)	CLK&RN&SE&SI	0.0100	n/a	n/a	-0.0066
D(LH)	!CLK&RN&!SE&!SI	0.0100	n/a	n/a	0.1831
D(LH)	!CLK&RN&SE&!SI	0.0100	n/a	n/a	-0.0186
D(LH)	!CLK&RN&!SE&SI	0.0100	n/a	n/a	0.1831
D(LH)	!CLK&RN&SE&SI	0.0100	n/a	n/a	-0.0064
RN(HL)	!CLK&!D&!SE&!SI	0.0100	n/a	n/a	0.0425
RN(HL)	!CLK&D&SE&!SI	0.0100	n/a	n/a	0.0425
RN(HL)	!CLK&D&!SE&SI	0.0100	n/a	n/a	0.0412
RN(HL)	!CLK&D&SE&SI	0.0100	n/a	n/a	0.0412
RN(HL)	CLK&D&!SE&!SI	0.0100	n/a	n/a	0.0439
RN(HL)	CLK&D&SE&!SI	0.0100	n/a	n/a	0.0440
RN(HL)	CLK&D&!SE&SI	0.0100	n/a	n/a	0.0439
RN(HL)	CLK&D&SE&SI	0.0100	n/a	n/a	0.0439
RN(HL)	!CLK&!D&SE&!SI	0.0100	n/a	n/a	0.0425

continues on next page

Table 122 – continued from previous page

RN(HL)	!CLK&!D&!SE&SI	0.0100	n/a	n/a	0.0425
RN(HL)	!CLK&!D&SE&SI	0.0100	n/a	n/a	0.0412
RN(HL)	CLK&!D&!SE&!SI	0.0100	n/a	n/a	0.0440
RN(HL)	CLK&!D&SE&!SI	0.0100	n/a	n/a	0.0440
RN(HL)	CLK&!D&!SE&SI	0.0100	n/a	n/a	0.0440
RN(HL)	CLK&!D&SE&SI	0.0100	n/a	n/a	0.0439
RN(HL)	!CLK&D&!SE&!SI	0.0100	n/a	n/a	0.0412
RN(LH)	!CLK&!D&!SE&!SI	0.0100	n/a	n/a	-0.0403
RN(LH)	!CLK&!D&!SE&SI	0.0100	n/a	n/a	-0.0403
RN(LH)	!CLK&!D&SE&!SI	0.0100	n/a	n/a	-0.0403
RN(LH)	!CLK&!D&SE&SI	0.0100	n/a	n/a	-0.0369
RN(LH)	!CLK&D&!SE&!SI	0.0100	n/a	n/a	-0.0369
RN(LH)	!CLK&D&!SE&SI	0.0100	n/a	n/a	-0.0369
RN(LH)	!CLK&D&SE&!SI	0.0100	n/a	n/a	-0.0403
RN(LH)	!CLK&D&SE&SI	0.0100	n/a	n/a	-0.0369
RN(LH)	CLK&!D&!SE&!SI	0.0100	n/a	n/a	-0.0403
RN(LH)	CLK&!D&!SE&SI	0.0100	n/a	n/a	-0.0403
RN(LH)	CLK&!D&SE&!SI	0.0100	n/a	n/a	-0.0403
RN(LH)	CLK&!D&SE&SI	0.0100	n/a	n/a	-0.0403
RN(LH)	CLK&D&!SE&!SI	0.0100	n/a	n/a	-0.0403
RN(LH)	CLK&D&!SE&SI	0.0100	n/a	n/a	-0.0403
RN(LH)	CLK&D&SE&!SI	0.0100	n/a	n/a	-0.0403
RN(LH)	CLK&D&SE&SI	0.0100	n/a	n/a	-0.0403

LEAKAGE POWER

When Condition	Power (nW)
!CLK&!D&!RN&!SE&!SI	0.4510
!CLK&!D&!RN&!SE&SI	0.4524
!CLK&!D&!RN&SE&!SI	0.4888
!CLK&!D&!RN&SE&SI	0.5155
!CLK&D&!RN&!SE&!SI	0.4459
!CLK&D&!RN&!SE&SI	0.4459
!CLK&D&!RN&SE&!SI	0.5302
!CLK&D&!RN&SE&SI	0.4800
CLK&!D&!RN&!SE&!SI	0.4284
CLK&!D&!RN&!SE&SI	0.4284
CLK&!D&!RN&SE&!SI	0.4271
CLK&!D&!RN&SE&SI	0.4301
CLK&D&!RN&!SE&!SI	0.4315
CLK&D&!RN&!SE&SI	0.4315
CLK&D&!RN&SE&!SI	0.4273
CLK&D&!RN&SE&SI	0.4301
CLK&!D&RN&!SE&!SI	0.4543
CLK&!D&RN&!SE&SI	0.4543
CLK&!D&RN&SE&!SI	0.4528
CLK&D&RN&SE&!SI	0.4528

continues on next page

Table 123 – continued from previous page

CLK&!D&RN&SE&SI	0.6418
CLK&D&RN&!SE&!SI	0.6044
CLK&D&RN&!SE&SI	0.6044
CLK&D&RN&SE&SI	0.6236
!CLK&!D&RN&!SE&!SI	0.4529
!CLK&!D&RN&!SE&SI	0.4544
!CLK&!D&RN&SE&!SI	0.4908
!CLK&!D&RN&SE&SI	0.5980
!CLK&D&RN&!SE&!SI	0.5284
!CLK&D&RN&!SE&SI	0.5284
!CLK&D&RN&SE&!SI	0.5322
!CLK&D&RN&SE&SI	0.5625

gf180mcu_fd_sc_mcu7t5v0__sdffrnq_2

gf180mcu_fd_sc_mcu7t5v0__sdffrnq_2 symbol

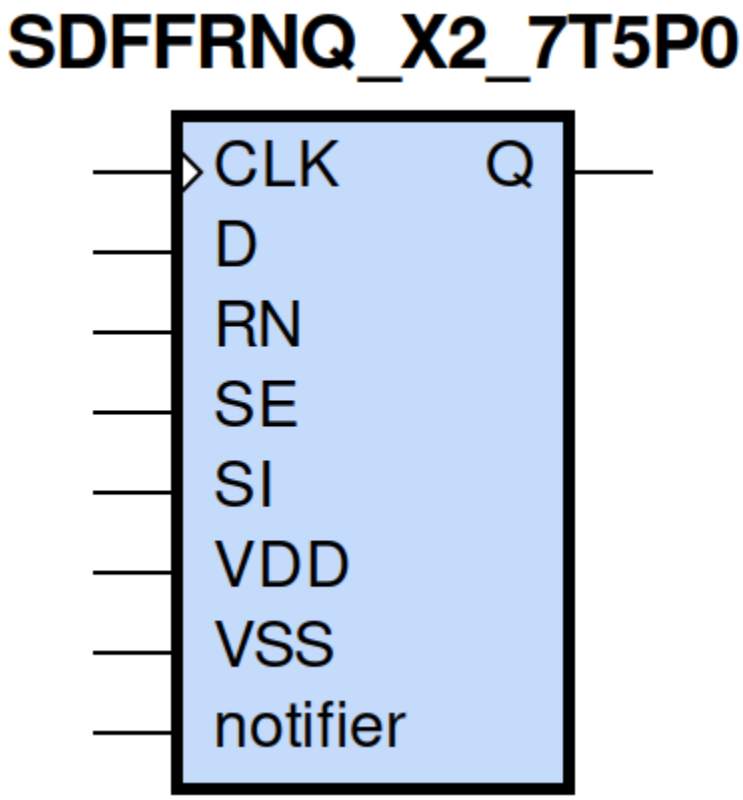

gf180mcu_fd_sc_mcu7t5v0__sdffrnq_2 schematic

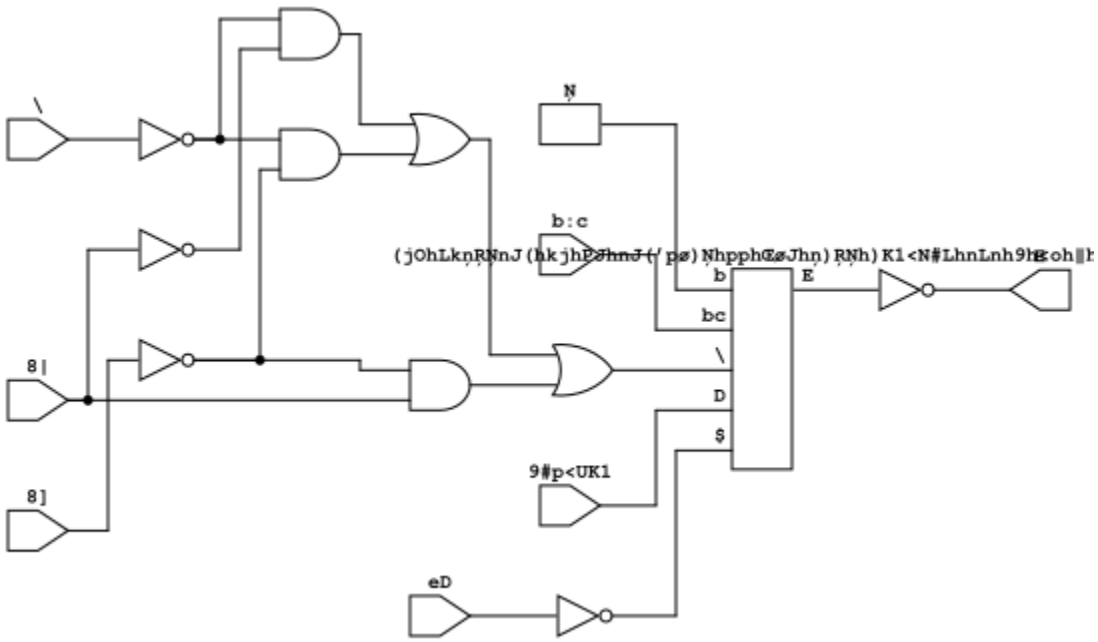

gf180mcu_fd_sc_mcu7t5v0__sdffrnq_2 layout

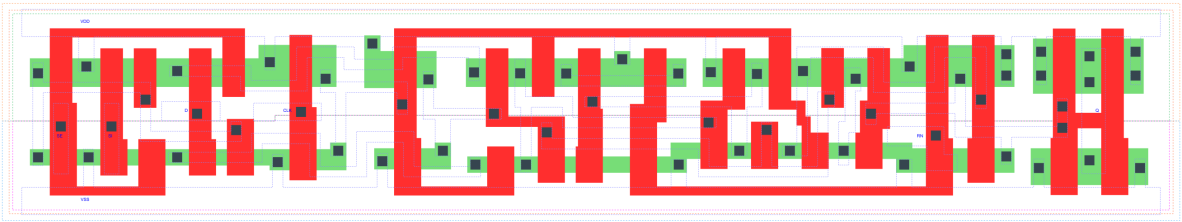

SDFFRNQ_X2 is a positive edge triggered scan D-type flip flop, active low reset, 2X drive strength

Attributes

Attribute	Value
area	98.784000 μm^2

TRUTH TABLE

Input					Output
RN	SE	SI	D	CLK	Q
H	L	X	L	↑	L
H	L	X	H	↑	H
H	H	L	X	↑	L
H	H	H	X	↑	H
L	X	X	X	X	L

FUNCTIONAL SCHEMATIC

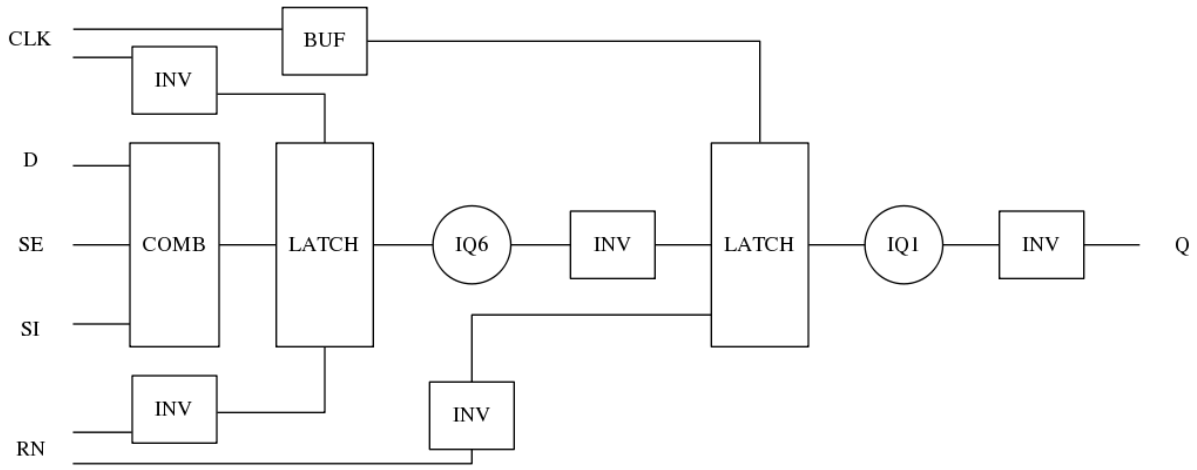

CONSTRAINTS

Constraint Pin	Related Pin	setup(ns)	hold(ns)
SE(LH)	CLK(LH)	0.5610	-0.2520
SE(LH)	CLK(LH)	0.7390	-0.0860
SE(HL)	CLK(LH)	0.6300	-0.0520
SE(HL)	CLK(LH)	0.6410	-0.3610
SI(HL)	CLK(LH)	0.7040	-0.0860
SI(HL)	CLK(LH)	0.7100	-0.0520
SI(LH)	CLK(LH)	0.6070	-0.3030
SI(LH)	CLK(LH)	0.5900	-0.2920
D(HL)	CLK(LH)	0.6130	-0.0400
D(HL)	CLK(LH)	0.6130	-0.0400
D(LH)	CLK(LH)	0.5270	-0.2460
D(LH)	CLK(LH)	0.5270	-0.2460

Constraint Pin	Related Pin	recovery(ns)	removal(ns)
RN(LH)	CLK(LH)	-0.2120	0.3840
RN(LH)	CLK(LH)	-0.2120	0.3840
RN(LH)	CLK(LH)	-0.2120	0.3840
RN(LH)	CLK(LH)	-0.2120	0.3840

Constraint Pin	Related Pin	Minimum Pulse Width(ns)
CLK(HLH)	CLK(HL)	0.7230
CLK(HLH)	CLK(HL)	0.7420
CLK(HLH)	CLK(HL)	0.7230
CLK(HLH)	CLK(HL)	0.6560
CLK(HLH)	CLK(HL)	0.5710
CLK(HLH)	CLK(HL)	0.8030
CLK(HLH)	CLK(HL)	0.5770
CLK(HLH)	CLK(HL)	0.6140
CLK(LHL)	CLK(LH)	0.4170
CLK(LHL)	CLK(LH)	0.4170
CLK(LHL)	CLK(LH)	0.4170
CLK(LHL)	CLK(LH)	0.4850
CLK(LHL)	CLK(LH)	0.4850
CLK(LHL)	CLK(LH)	0.4170
CLK(LHL)	CLK(LH)	0.4850
CLK(LHL)	CLK(LH)	0.4850
RN(HLH)	RN(HL)	0.3290
RN(HLH)	RN(HL)	0.3290
RN(HLH)	RN(HL)	0.3290
RN(HLH)	RN(HL)	0.3290
RN(HLH)	RN(HL)	0.4270
RN(HLH)	RN(HL)	0.4270
RN(HLH)	RN(HL)	0.4270
RN(HLH)	RN(HL)	0.4270
RN(HLH)	RN(HL)	0.3290
RN(HLH)	RN(HL)	0.3290
RN(HLH)	RN(HL)	0.3290
RN(HLH)	RN(HL)	0.4270
RN(HLH)	RN(HL)	0.4270
RN(HLH)	RN(HL)	0.4270
RN(HLH)	RN(HL)	0.4270
RN(HLH)	RN(HL)	0.3290

PIN CAPACITANCE (pf)

Pin	Type	Capacitance (pf)
SE	input	0.0061
SI	input	0.0027
D	input	0.0028
CLK	input	0.0036
RN	input	0.0069

DELAY AND OUTPUT TRANSITION TIME corresponding to min slew and load

Input Pin	Output	When Condition	Tin (ns)	Out Load (pf)	Delay (ns)	Tout (ns)
CLK(LH)	Q(HL)	!D&RN&!SE&!SI	0.0100	0.0010	0.6599	0.0401
CLK(LH)	Q(HL)	!D&RN&!SE&SI	0.0100	0.0010	0.6599	0.0401
CLK(LH)	Q(HL)	!D&RN&SE&!SI	0.0100	0.0010	0.6600	0.0401
CLK(LH)	Q(HL)	D&RN&SE&!SI	0.0100	0.0010	0.6597	0.0402
CLK(LH)	Q(LH)	!D&RN&SE&SI	0.0100	0.0010	0.7238	0.0476
CLK(LH)	Q(LH)	D&RN&!SE&!SI	0.0100	0.0010	0.7238	0.0478
CLK(LH)	Q(LH)	D&RN&!SE&SI	0.0100	0.0010	0.7238	0.0478
CLK(LH)	Q(LH)	D&RN&SE&SI	0.0100	0.0010	0.7238	0.0477
RN(HL)	Q(HL)	!CLK&!D&!SE&!SI	0.0100	0.0010	0.2232	0.0405
RN(HL)	Q(HL)	!CLK&D&SE&!SI	0.0100	0.0010	0.2232	0.0405
RN(HL)	Q(HL)	!CLK&D&!SE&SI	0.0100	0.0010	0.2232	0.0405
RN(HL)	Q(HL)	!CLK&D&SE&SI	0.0100	0.0010	0.2232	0.0405
RN(HL)	Q(HL)	CLK&D&!SE&!SI	0.0100	0.0010	0.2232	0.0403
RN(HL)	Q(HL)	CLK&D&SE&!SI	0.0100	0.0010	0.2233	0.0402
RN(HL)	Q(HL)	CLK&D&!SE&SI	0.0100	0.0010	0.2232	0.0403
RN(HL)	Q(HL)	CLK&D&SE&SI	0.0100	0.0010	0.2232	0.0403
RN(HL)	Q(HL)	!CLK&!D&SE&!SI	0.0100	0.0010	0.2232	0.0405
RN(HL)	Q(HL)	!CLK&!D&!SE&SI	0.0100	0.0010	0.2232	0.0405
RN(HL)	Q(HL)	!CLK&!D&SE&SI	0.0100	0.0010	0.2232	0.0405
RN(HL)	Q(HL)	CLK&!D&!SE&!SI	0.0100	0.0010	0.2232	0.0403
RN(HL)	Q(HL)	CLK&!D&SE&!SI	0.0100	0.0010	0.2233	0.0402
RN(HL)	Q(HL)	CLK&!D&!SE&SI	0.0100	0.0010	0.2232	0.0403
RN(HL)	Q(HL)	CLK&!D&SE&SI	0.0100	0.0010	0.2232	0.0403
RN(HL)	Q(HL)	!CLK&D&!SE&!SI	0.0100	0.0010	0.2232	0.0405

DYNAMIC ENERGY

Input Pin	When Condition	Tin (ns)	Output	Out Load (pf)	Energy (uW/MHz)
CLK	!D&RN&!SE&!SI	0.0100	Q(HL)	0.0010	0.7319
CLK	!D&RN&!SE&SI	0.0100	Q(HL)	0.0010	0.7320
CLK	!D&RN&SE&!SI	0.0100	Q(HL)	0.0010	0.7321
CLK	D&RN&SE&!SI	0.0100	Q(HL)	0.0010	0.7319
CLK	!D&RN&SE&SI	0.0100	Q(LH)	0.0010	0.7799

continues on next page

Table 125 – continued from previous page

CLK	D&RN&!SE&!SI	0.0100	Q(LH)	0.0010	0.7797
CLK	D&RN&!SE&SI	0.0100	Q(LH)	0.0010	0.7797
CLK	D&RN&SE&SI	0.0100	Q(LH)	0.0010	0.7798
RN	!CLK&!D&!SE&!SI	0.0100	Q(HL)	0.0010	0.5311
RN	!CLK&D&SE&!SI	0.0100	Q(HL)	0.0010	0.5311
RN	!CLK&D&!SE&SI	0.0100	Q(HL)	0.0010	0.5470
RN	!CLK&D&SE&SI	0.0100	Q(HL)	0.0010	0.5470
RN	CLK&D&!SE&!SI	0.0100	Q(HL)	0.0010	0.7573
RN	CLK&D&SE&!SI	0.0100	Q(HL)	0.0010	0.7573
RN	CLK&D&!SE&SI	0.0100	Q(HL)	0.0010	0.7573
RN	CLK&D&SE&SI	0.0100	Q(HL)	0.0010	0.7573
RN	!CLK&!D&SE&!SI	0.0100	Q(HL)	0.0010	0.5310
RN	!CLK&!D&!SE&SI	0.0100	Q(HL)	0.0010	0.5311
RN	!CLK&!D&SE&SI	0.0100	Q(HL)	0.0010	0.5470
RN	CLK&!D&!SE&!SI	0.0100	Q(HL)	0.0010	0.7574
RN	CLK&!D&SE&!SI	0.0100	Q(HL)	0.0010	0.7573
RN	CLK&!D&!SE&SI	0.0100	Q(HL)	0.0010	0.7574
RN	CLK&!D&SE&SI	0.0100	Q(HL)	0.0010	0.7573
RN	!CLK&D&!SE&!SI	0.0100	Q(HL)	0.0010	0.5470
D(HL)	!CLK&!RN&!SE&!SI	0.0100	n/a	n/a	0.3510
D(HL)	!CLK&!RN&!SE&SI	0.0100	n/a	n/a	0.3510
D(HL)	!CLK&!RN&SE&!SI	0.0100	n/a	n/a	0.0203
D(HL)	!CLK&!RN&SE&SI	0.0100	n/a	n/a	0.0100
D(HL)	CLK&!RN&!SE&!SI	0.0100	n/a	n/a	0.0245
D(HL)	CLK&!RN&!SE&SI	0.0100	n/a	n/a	0.0245
D(HL)	CLK&!RN&SE&!SI	0.0100	n/a	n/a	0.0236
D(HL)	CLK&!RN&SE&SI	0.0100	n/a	n/a	0.0095
D(HL)	CLK&RN&!SE&!SI	0.0100	n/a	n/a	0.0567
D(HL)	CLK&RN&SE&!SI	0.0100	n/a	n/a	0.0202
D(HL)	CLK&RN&!SE&SI	0.0100	n/a	n/a	0.0567
D(HL)	CLK&RN&SE&SI	0.0100	n/a	n/a	0.0091
D(HL)	!CLK&RN&!SE&!SI	0.0100	n/a	n/a	0.3385
D(HL)	!CLK&RN&SE&!SI	0.0100	n/a	n/a	0.0203
D(HL)	!CLK&RN&!SE&SI	0.0100	n/a	n/a	0.3385
D(HL)	!CLK&RN&SE&SI	0.0100	n/a	n/a	0.0100
SE(LH)	!CLK&!D&!RN&!SI	0.0100	n/a	n/a	0.0024
SE(LH)	!CLK&!D&!RN&SI	0.0100	n/a	n/a	0.2023
SE(LH)	!CLK&D&!RN&!SI	0.0100	n/a	n/a	0.3722
SE(LH)	!CLK&D&!RN&SI	0.0100	n/a	n/a	-0.0060
SE(LH)	CLK&!D&!RN&!SI	0.0100	n/a	n/a	0.0012
SE(LH)	CLK&!D&!RN&SI	0.0100	n/a	n/a	-0.0048
SE(LH)	CLK&D&!RN&!SI	0.0100	n/a	n/a	0.0036
SE(LH)	CLK&D&!RN&SI	0.0100	n/a	n/a	-0.0080
SE(LH)	!CLK&D&RN&!SI	0.0100	n/a	n/a	0.3592
SE(LH)	!CLK&D&RN&SI	0.0100	n/a	n/a	-0.0060
SE(LH)	CLK&D&RN&!SI	0.0100	n/a	n/a	0.0399
SE(LH)	CLK&D&RN&SI	0.0100	n/a	n/a	-0.0077
SE(LH)	!CLK&!D&RN&!SI	0.0100	n/a	n/a	0.0025
SE(LH)	!CLK&!D&RN&SI	0.0100	n/a	n/a	0.2080
SE(LH)	CLK&!D&RN&!SI	0.0100	n/a	n/a	0.0012
SE(LH)	CLK&!D&RN&SI	0.0100	n/a	n/a	-0.0048
CLK(LH)	!D&!RN&!SE&!SI	0.0100	n/a	n/a	0.2290

continues on next page

Table 125 – continued from previous page

CLK(LH)	!D&!RN&!SE&SI	0.0100	n/a	n/a	0.2289
CLK(LH)	!D&!RN&SE&!SI	0.0100	n/a	n/a	0.2289
CLK(LH)	!D&!RN&SE&SI	0.0100	n/a	n/a	0.4819
CLK(LH)	D&!RN&!SE&!SI	0.0100	n/a	n/a	0.4818
CLK(LH)	D&!RN&!SE&SI	0.0100	n/a	n/a	0.4818
CLK(LH)	D&!RN&SE&!SI	0.0100	n/a	n/a	0.2289
CLK(LH)	D&!RN&SE&SI	0.0100	n/a	n/a	0.4819
CLK(LH)	D&RN&!SE&!SI	0.0100	n/a	n/a	0.2239
CLK(LH)	D&RN&SE&!SI	0.0100	n/a	n/a	0.2289
CLK(LH)	D&RN&!SE&SI	0.0100	n/a	n/a	0.2239
CLK(LH)	D&RN&SE&SI	0.0100	n/a	n/a	0.2240
CLK(LH)	!D&RN&!SE&!SI	0.0100	n/a	n/a	0.2289
CLK(LH)	!D&RN&SE&!SI	0.0100	n/a	n/a	0.2290
CLK(LH)	!D&RN&!SE&SI	0.0100	n/a	n/a	0.2290
CLK(LH)	!D&RN&SE&SI	0.0100	n/a	n/a	0.2240
SI(LH)	!CLK&!D&!RN&!SE	0.0100	n/a	n/a	-0.0198
SI(LH)	!CLK&!D&!RN&SE	0.0100	n/a	n/a	0.2014
SI(LH)	!CLK&D&!RN&!SE	0.0100	n/a	n/a	-0.0183
SI(LH)	!CLK&D&!RN&SE	0.0100	n/a	n/a	0.1884
SI(LH)	CLK&!D&!RN&!SE	0.0100	n/a	n/a	-0.0198
SI(LH)	CLK&!D&!RN&SE	0.0100	n/a	n/a	-0.0158
SI(LH)	CLK&D&!RN&!SE	0.0100	n/a	n/a	-0.0188
SI(LH)	CLK&D&!RN&SE	0.0100	n/a	n/a	-0.0158
SI(LH)	!CLK&D&RN&!SE	0.0100	n/a	n/a	-0.0183
SI(LH)	!CLK&D&RN&SE	0.0100	n/a	n/a	0.1941
SI(LH)	CLK&D&RN&!SE	0.0100	n/a	n/a	-0.0184
SI(LH)	CLK&D&RN&SE	0.0100	n/a	n/a	-0.0158
SI(LH)	!CLK&!D&RN&!SE	0.0100	n/a	n/a	-0.0198
SI(LH)	!CLK&!D&RN&SE	0.0100	n/a	n/a	0.2071
SI(LH)	CLK&!D&RN&!SE	0.0100	n/a	n/a	-0.0198
SI(LH)	CLK&!D&RN&SE	0.0100	n/a	n/a	-0.0158
SE(HL)	!CLK&!D&!RN&!SI	0.0100	n/a	n/a	0.1316
SE(HL)	!CLK&!D&!RN&SI	0.0100	n/a	n/a	0.4773
SE(HL)	!CLK&D&!RN&!SI	0.0100	n/a	n/a	0.3297
SE(HL)	!CLK&D&!RN&SI	0.0100	n/a	n/a	0.1337
SE(HL)	CLK&!D&!RN&!SI	0.0100	n/a	n/a	0.1363
SE(HL)	CLK&!D&!RN&SI	0.0100	n/a	n/a	0.1354
SE(HL)	CLK&D&!RN&!SI	0.0100	n/a	n/a	0.1353
SE(HL)	CLK&D&!RN&SI	0.0100	n/a	n/a	0.1383
SE(HL)	!CLK&D&RN&!SI	0.0100	n/a	n/a	0.3356
SE(HL)	!CLK&D&RN&SI	0.0100	n/a	n/a	0.1337
SE(HL)	CLK&D&RN&!SI	0.0100	n/a	n/a	0.1368
SE(HL)	CLK&D&RN&SI	0.0100	n/a	n/a	0.1337
SE(HL)	!CLK&!D&RN&!SI	0.0100	n/a	n/a	0.1317
SE(HL)	!CLK&!D&RN&SI	0.0100	n/a	n/a	0.4648
SE(HL)	CLK&!D&RN&!SI	0.0100	n/a	n/a	0.1315
SE(HL)	CLK&!D&RN&SI	0.0100	n/a	n/a	0.1833
CLK(HL)	!D&!RN&!SE&!SI	0.0100	n/a	n/a	0.3422
CLK(HL)	!D&!RN&!SE&SI	0.0100	n/a	n/a	0.3422
CLK(HL)	!D&!RN&SE&!SI	0.0100	n/a	n/a	0.3615
CLK(HL)	!D&!RN&SE&SI	0.0100	n/a	n/a	0.4923
CLK(HL)	D&!RN&!SE&!SI	0.0100	n/a	n/a	0.4627

continues on next page

Table 125 – continued from previous page

CLK(HL)	D&!RN&!SE&SI	0.0100	n/a	n/a	0.4627
CLK(HL)	D&!RN&SE&!SI	0.0100	n/a	n/a	0.3840
CLK(HL)	D&!RN&SE&SI	0.0100	n/a	n/a	0.4775
CLK(HL)	D&RN&!SE&!SI	0.0100	n/a	n/a	0.2817
CLK(HL)	D&RN&SE&!SI	0.0100	n/a	n/a	0.2822
CLK(HL)	D&RN&!SE&SI	0.0100	n/a	n/a	0.2817
CLK(HL)	D&RN&SE&SI	0.0100	n/a	n/a	0.2816
CLK(HL)	!D&RN&!SE&!SI	0.0100	n/a	n/a	0.2822
CLK(HL)	!D&RN&SE&!SI	0.0100	n/a	n/a	0.2822
CLK(HL)	!D&RN&!SE&SI	0.0100	n/a	n/a	0.2822
CLK(HL)	!D&RN&SE&SI	0.0100	n/a	n/a	0.2816
SI(HL)	!CLK&!D&!RN&!SE	0.0100	n/a	n/a	0.0203
SI(HL)	!CLK&!D&!RN&SE	0.0100	n/a	n/a	0.4049
SI(HL)	!CLK&D&!RN&!SE	0.0100	n/a	n/a	0.0202
SI(HL)	!CLK&D&!RN&SE	0.0100	n/a	n/a	0.4126
SI(HL)	CLK&!D&!RN&!SE	0.0100	n/a	n/a	0.0202
SI(HL)	CLK&!D&!RN&SE	0.0100	n/a	n/a	0.0217
SI(HL)	CLK&D&!RN&!SE	0.0100	n/a	n/a	0.0202
SI(HL)	CLK&D&!RN&SE	0.0100	n/a	n/a	0.0218
SI(HL)	!CLK&D&RN&!SE	0.0100	n/a	n/a	0.0202
SI(HL)	!CLK&D&RN&SE	0.0100	n/a	n/a	0.3996
SI(HL)	CLK&D&RN&!SE	0.0100	n/a	n/a	0.0202
SI(HL)	CLK&D&RN&SE	0.0100	n/a	n/a	0.0730
SI(HL)	!CLK&!D&RN&!SE	0.0100	n/a	n/a	0.0203
SI(HL)	!CLK&!D&RN&SE	0.0100	n/a	n/a	0.3921
SI(HL)	CLK&!D&RN&!SE	0.0100	n/a	n/a	0.0202
SI(HL)	CLK&!D&RN&SE	0.0100	n/a	n/a	0.0876
D(LH)	!CLK&!RN&!SE&!SI	0.0100	n/a	n/a	0.1772
D(LH)	!CLK&!RN&!SE&SI	0.0100	n/a	n/a	0.1772
D(LH)	!CLK&!RN&SE&!SI	0.0100	n/a	n/a	-0.0186
D(LH)	!CLK&!RN&SE&SI	0.0100	n/a	n/a	-0.0064
D(LH)	CLK&!RN&!SE&!SI	0.0100	n/a	n/a	-0.0154
D(LH)	CLK&!RN&!SE&SI	0.0100	n/a	n/a	-0.0154
D(LH)	CLK&!RN&SE&!SI	0.0100	n/a	n/a	-0.0197
D(LH)	CLK&!RN&SE&SI	0.0100	n/a	n/a	-0.0122
D(LH)	CLK&RN&!SE&!SI	0.0100	n/a	n/a	-0.0155
D(LH)	CLK&RN&SE&!SI	0.0100	n/a	n/a	-0.0197
D(LH)	CLK&RN&!SE&SI	0.0100	n/a	n/a	-0.0154
D(LH)	CLK&RN&SE&SI	0.0100	n/a	n/a	-0.0066
D(LH)	!CLK&RN&!SE&!SI	0.0100	n/a	n/a	0.1830
D(LH)	!CLK&RN&SE&!SI	0.0100	n/a	n/a	-0.0186
D(LH)	!CLK&RN&!SE&SI	0.0100	n/a	n/a	0.1830
D(LH)	!CLK&RN&SE&SI	0.0100	n/a	n/a	-0.0064
RN(HL)	!CLK&!D&!SE&!SI	0.0100	n/a	n/a	0.0527
RN(HL)	!CLK&D&SE&!SI	0.0100	n/a	n/a	0.0527
RN(HL)	!CLK&D&!SE&SI	0.0100	n/a	n/a	0.0513
RN(HL)	!CLK&D&SE&SI	0.0100	n/a	n/a	0.0513
RN(HL)	CLK&D&!SE&!SI	0.0100	n/a	n/a	0.0540
RN(HL)	CLK&D&SE&!SI	0.0100	n/a	n/a	0.0541
RN(HL)	CLK&D&!SE&SI	0.0100	n/a	n/a	0.0540
RN(HL)	CLK&D&SE&SI	0.0100	n/a	n/a	0.0540
RN(HL)	!CLK&!D&SE&!SI	0.0100	n/a	n/a	0.0526

continues on next page

Table 125 – continued from previous page

RN(HL)	!CLK&!D&!SE&SI	0.0100	n/a	n/a	0.0527
RN(HL)	!CLK&!D&SE&SI	0.0100	n/a	n/a	0.0513
RN(HL)	CLK&!D&!SE&!SI	0.0100	n/a	n/a	0.0541
RN(HL)	CLK&!D&SE&!SI	0.0100	n/a	n/a	0.0541
RN(HL)	CLK&!D&!SE&SI	0.0100	n/a	n/a	0.0541
RN(HL)	CLK&!D&SE&SI	0.0100	n/a	n/a	0.0540
RN(HL)	!CLK&D&!SE&!SI	0.0100	n/a	n/a	0.0513
RN(LH)	!CLK&!D&!SE&!SI	0.0100	n/a	n/a	-0.0496
RN(LH)	!CLK&!D&!SE&SI	0.0100	n/a	n/a	-0.0496
RN(LH)	!CLK&!D&SE&!SI	0.0100	n/a	n/a	-0.0496
RN(LH)	!CLK&!D&SE&SI	0.0100	n/a	n/a	-0.0462
RN(LH)	!CLK&D&!SE&!SI	0.0100	n/a	n/a	-0.0462
RN(LH)	!CLK&D&!SE&SI	0.0100	n/a	n/a	-0.0462
RN(LH)	!CLK&D&SE&!SI	0.0100	n/a	n/a	-0.0496
RN(LH)	!CLK&D&SE&SI	0.0100	n/a	n/a	-0.0462
RN(LH)	CLK&!D&!SE&!SI	0.0100	n/a	n/a	-0.0496
RN(LH)	CLK&!D&!SE&SI	0.0100	n/a	n/a	-0.0496
RN(LH)	CLK&!D&SE&!SI	0.0100	n/a	n/a	-0.0496
RN(LH)	CLK&!D&SE&SI	0.0100	n/a	n/a	-0.0496
RN(LH)	CLK&D&!SE&!SI	0.0100	n/a	n/a	-0.0496
RN(LH)	CLK&D&!SE&SI	0.0100	n/a	n/a	-0.0496
RN(LH)	CLK&D&SE&!SI	0.0100	n/a	n/a	-0.0496
RN(LH)	CLK&D&SE&SI	0.0100	n/a	n/a	-0.0496

LEAKAGE POWER

When Condition	Power (nW)
!CLK&!D&!RN&!SE&!SI	0.4771
!CLK&!D&!RN&!SE&SI	0.4785
!CLK&!D&!RN&SE&!SI	0.5150
!CLK&!D&!RN&SE&SI	0.5417
!CLK&D&!RN&!SE&!SI	0.4721
!CLK&D&!RN&!SE&SI	0.4721
!CLK&D&!RN&SE&!SI	0.5563
!CLK&D&!RN&SE&SI	0.5061
CLK&!D&!RN&!SE&!SI	0.4545
CLK&!D&!RN&!SE&SI	0.4545
CLK&!D&!RN&SE&!SI	0.4532
CLK&!D&!RN&SE&SI	0.4562
CLK&D&!RN&!SE&!SI	0.4576
CLK&D&!RN&!SE&SI	0.4576
CLK&D&!RN&SE&!SI	0.4534
CLK&D&!RN&SE&SI	0.4562
CLK&!D&RN&!SE&!SI	0.4787
CLK&!D&RN&!SE&SI	0.4787
CLK&!D&RN&SE&!SI	0.4773
CLK&D&RN&SE&!SI	0.4772

continues on next page

Table 126 – continued from previous page

CLK&!D&RN&SE&SI	0.6675
CLK&D&RN&!SE&!SI	0.6302
CLK&D&RN&!SE&SI	0.6302
CLK&D&RN&SE&SI	0.6493
!CLK&!D&RN&!SE&!SI	0.4774
!CLK&!D&RN&!SE&SI	0.4788
!CLK&!D&RN&SE&!SI	0.5152
!CLK&!D&RN&SE&SI	0.6225
!CLK&D&RN&!SE&!SI	0.5528
!CLK&D&RN&!SE&SI	0.5528
!CLK&D&RN&SE&!SI	0.5566
!CLK&D&RN&SE&SI	0.5869

gf180mcu_fd_sc_mcu7t5v0__sdffrnq_4

gf180mcu_fd_sc_mcu7t5v0__sdffrnq_4 symbol

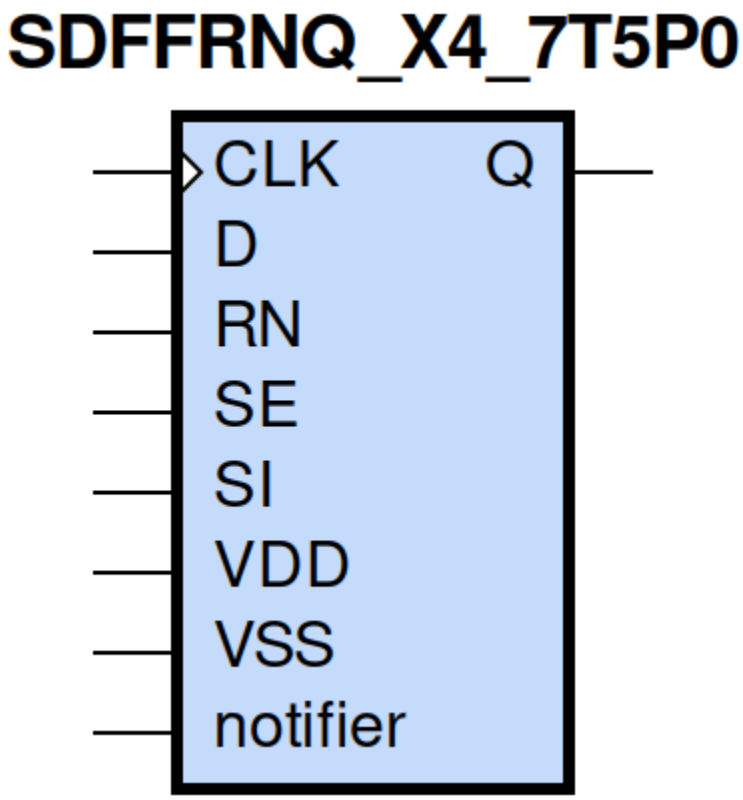

gf180mcu_fd_sc_mcu7t5v0__sdffrnq_4 schematic

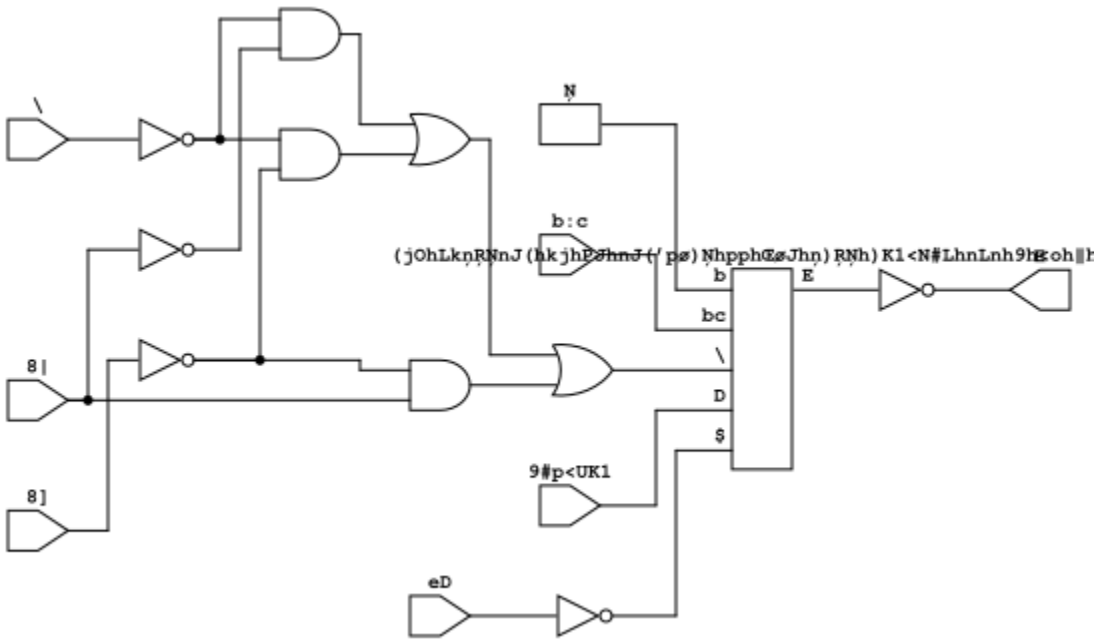

gf180mcu_fd_sc_mcu7t5v0__sdffrnq_4 layout

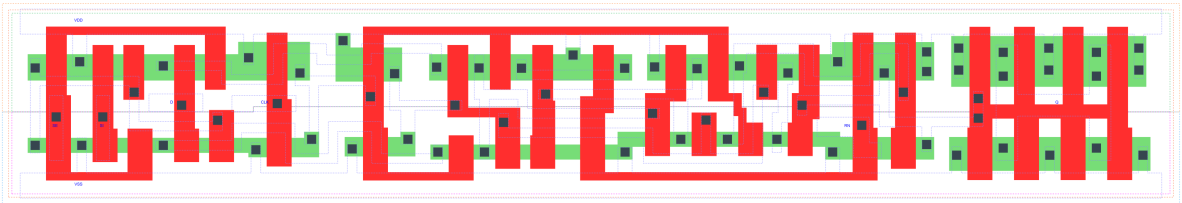

SDFFRNQ_X4 is a positive edge triggered scan D-type flip flop, active low reset, 4X drive strength

Attributes

Attribute	Value
area	107.564800 μm^2

TRUTH TABLE

Input					Output
RN	SE	SI	D	CLK	Q
H	L	X	L	↑	L
H	L	X	H	↑	H
H	H	L	X	↑	L
H	H	H	X	↑	H
L	X	X	X	X	L

FUNCTIONAL SCHEMATIC

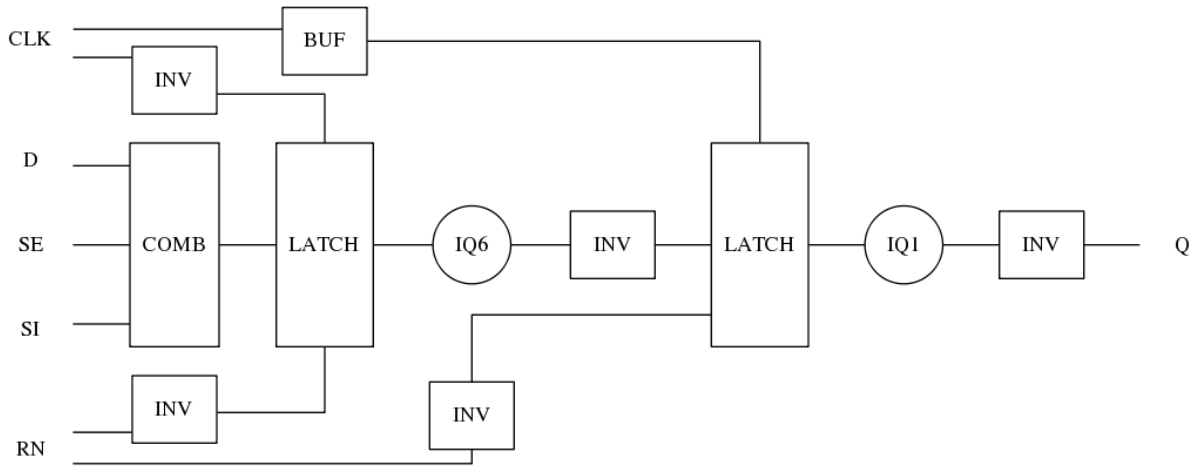

CONSTRAINTS

Constraint Pin	Related Pin	setup(ns)	hold(ns)
SE(LH)	CLK(LH)	0.5610	-0.2580
SE(LH)	CLK(LH)	0.7390	-0.0920
SE(HL)	CLK(LH)	0.6300	-0.0570
SE(HL)	CLK(LH)	0.6410	-0.3610
SI(HL)	CLK(LH)	0.7040	-0.0860
SI(HL)	CLK(LH)	0.7100	-0.0570
SI(LH)	CLK(LH)	0.6070	-0.3030
SI(LH)	CLK(LH)	0.5900	-0.2980
D(HL)	CLK(LH)	0.6130	-0.0400
D(HL)	CLK(LH)	0.6130	-0.0400
D(LH)	CLK(LH)	0.5270	-0.2460
D(LH)	CLK(LH)	0.5270	-0.2460

Constraint Pin	Related Pin	recovery(ns)	removal(ns)
RN(LH)	CLK(LH)	-0.2120	0.3840
RN(LH)	CLK(LH)	-0.2120	0.3840
RN(LH)	CLK(LH)	-0.2120	0.3840
RN(LH)	CLK(LH)	-0.2120	0.3840

Constraint Pin	Related Pin	Minimum Pulse Width(ns)
CLK(HLH)	CLK(HL)	0.7170
CLK(HLH)	CLK(HL)	0.7360
CLK(HLH)	CLK(HL)	0.7170
CLK(HLH)	CLK(HL)	0.6500
CLK(HLH)	CLK(HL)	0.5710
CLK(HLH)	CLK(HL)	0.7970
CLK(HLH)	CLK(HL)	0.5710
CLK(HLH)	CLK(HL)	0.6140
CLK(LHL)	CLK(LH)	0.5050
CLK(LHL)	CLK(LH)	0.5050
CLK(LHL)	CLK(LH)	0.5050
CLK(LHL)	CLK(LH)	0.5730
CLK(LHL)	CLK(LH)	0.5730
CLK(LHL)	CLK(LH)	0.5050
CLK(LHL)	CLK(LH)	0.5730
CLK(LHL)	CLK(LH)	0.5730
RN(HLH)	RN(HL)	0.3880
RN(HLH)	RN(HL)	0.3880
RN(HLH)	RN(HL)	0.3880
RN(HLH)	RN(HL)	0.3880
RN(HLH)	RN(HL)	0.4270
RN(HLH)	RN(HL)	0.4270
RN(HLH)	RN(HL)	0.4270
RN(HLH)	RN(HL)	0.4270
RN(HLH)	RN(HL)	0.3880
RN(HLH)	RN(HL)	0.3880
RN(HLH)	RN(HL)	0.3880
RN(HLH)	RN(HL)	0.4270
RN(HLH)	RN(HL)	0.4270
RN(HLH)	RN(HL)	0.4270
RN(HLH)	RN(HL)	0.4270
RN(HLH)	RN(HL)	0.3880

PIN CAPACITANCE (pf)

Pin	Type	Capacitance (pf)
SE	input	0.0061
SI	input	0.0027
D	input	0.0028
CLK	input	0.0036
RN	input	0.0069

DELAY AND OUTPUT TRANSITION TIME corresponding to min slew and load

Input Pin	Output	When Condition	Tin (ns)	Out Load (pf)	Delay (ns)	Tout (ns)
CLK(LH)	Q(HL)	!D&RN&!SE&!SI	0.0100	0.0010	0.7464	0.0527
CLK(LH)	Q(HL)	!D&RN&!SE&SI	0.0100	0.0010	0.7465	0.0527
CLK(LH)	Q(HL)	!D&RN&SE&!SI	0.0100	0.0010	0.7465	0.0527
CLK(LH)	Q(HL)	D&RN&SE&!SI	0.0100	0.0010	0.7464	0.0527
CLK(LH)	Q(LH)	!D&RN&SE&SI	0.0100	0.0010	0.8485	0.0593
CLK(LH)	Q(LH)	D&RN&!SE&!SI	0.0100	0.0010	0.8485	0.0598
CLK(LH)	Q(LH)	D&RN&!SE&SI	0.0100	0.0010	0.8485	0.0593
CLK(LH)	Q(LH)	D&RN&SE&SI	0.0100	0.0010	0.8485	0.0593
RN(HL)	Q(HL)	!CLK&!D&!SE&!SI	0.0100	0.0010	0.3072	0.0539
RN(HL)	Q(HL)	!CLK&D&SE&!SI	0.0100	0.0010	0.3072	0.0539
RN(HL)	Q(HL)	!CLK&D&!SE&SI	0.0100	0.0010	0.3073	0.0539
RN(HL)	Q(HL)	!CLK&D&SE&SI	0.0100	0.0010	0.3073	0.0539
RN(HL)	Q(HL)	CLK&D&!SE&!SI	0.0100	0.0010	0.3072	0.0539
RN(HL)	Q(HL)	CLK&D&SE&!SI	0.0100	0.0010	0.3072	0.0539
RN(HL)	Q(HL)	CLK&D&!SE&SI	0.0100	0.0010	0.3072	0.0539
RN(HL)	Q(HL)	CLK&D&SE&SI	0.0100	0.0010	0.3072	0.0539
RN(HL)	Q(HL)	!CLK&!D&SE&!SI	0.0100	0.0010	0.3072	0.0539
RN(HL)	Q(HL)	!CLK&!D&!SE&SI	0.0100	0.0010	0.3072	0.0539
RN(HL)	Q(HL)	!CLK&!D&SE&SI	0.0100	0.0010	0.3073	0.0539
RN(HL)	Q(HL)	CLK&!D&!SE&!SI	0.0100	0.0010	0.3072	0.0539
RN(HL)	Q(HL)	CLK&!D&SE&!SI	0.0100	0.0010	0.3072	0.0539
RN(HL)	Q(HL)	CLK&!D&!SE&SI	0.0100	0.0010	0.3072	0.0539
RN(HL)	Q(HL)	CLK&!D&SE&SI	0.0100	0.0010	0.3072	0.0539
RN(HL)	Q(HL)	!CLK&D&!SE&!SI	0.0100	0.0010	0.3073	0.0539

DYNAMIC ENERGY

Input Pin	When Condition	Tin (ns)	Output	Out Load (pf)	Energy (uW/MHz)
CLK	!D&RN&!SE&!SI	0.0100	Q(HL)	0.0010	1.1389
CLK	!D&RN&!SE&SI	0.0100	Q(HL)	0.0010	1.1391
CLK	!D&RN&SE&!SI	0.0100	Q(HL)	0.0010	1.1391
CLK	D&RN&SE&!SI	0.0100	Q(HL)	0.0010	1.1391
CLK	!D&RN&SE&SI	0.0100	Q(LH)	0.0010	1.2236

continues on next page

Table 128 – continued from previous page

CLK	D&RN&!SE&!SI	0.0100	Q(LH)	0.0010	1.2237
CLK	D&RN&!SE&SI	0.0100	Q(LH)	0.0010	1.2236
CLK	D&RN&SE&SI	0.0100	Q(LH)	0.0010	1.2236
RN	!CLK&!D&!SE&!SI	0.0100	Q(HL)	0.0010	0.9393
RN	!CLK&D&SE&!SI	0.0100	Q(HL)	0.0010	0.9393
RN	!CLK&D&!SE&SI	0.0100	Q(HL)	0.0010	0.9547
RN	!CLK&D&SE&SI	0.0100	Q(HL)	0.0010	0.9547
RN	CLK&D&!SE&!SI	0.0100	Q(HL)	0.0010	1.1760
RN	CLK&D&SE&!SI	0.0100	Q(HL)	0.0010	1.1760
RN	CLK&D&!SE&SI	0.0100	Q(HL)	0.0010	1.1760
RN	CLK&D&SE&SI	0.0100	Q(HL)	0.0010	1.1760
RN	!CLK&!D&SE&!SI	0.0100	Q(HL)	0.0010	0.9392
RN	!CLK&!D&!SE&SI	0.0100	Q(HL)	0.0010	0.9393
RN	!CLK&!D&SE&SI	0.0100	Q(HL)	0.0010	0.9547
RN	CLK&!D&!SE&!SI	0.0100	Q(HL)	0.0010	1.1762
RN	CLK&!D&SE&!SI	0.0100	Q(HL)	0.0010	1.1761
RN	CLK&!D&!SE&SI	0.0100	Q(HL)	0.0010	1.1761
RN	CLK&!D&SE&SI	0.0100	Q(HL)	0.0010	1.1760
RN	!CLK&D&!SE&!SI	0.0100	Q(HL)	0.0010	0.9547
D(HL)	!CLK&!RN&!SE&!SI	0.0100	n/a	n/a	0.3511
D(HL)	!CLK&!RN&!SE&SI	0.0100	n/a	n/a	0.3511
D(HL)	!CLK&!RN&SE&!SI	0.0100	n/a	n/a	0.0203
D(HL)	!CLK&!RN&SE&SI	0.0100	n/a	n/a	0.0100
D(HL)	CLK&!RN&!SE&!SI	0.0100	n/a	n/a	0.0245
D(HL)	CLK&!RN&!SE&SI	0.0100	n/a	n/a	0.0245
D(HL)	CLK&!RN&SE&!SI	0.0100	n/a	n/a	0.0236
D(HL)	CLK&!RN&SE&SI	0.0100	n/a	n/a	0.0095
D(HL)	CLK&RN&!SE&!SI	0.0100	n/a	n/a	0.0567
D(HL)	CLK&RN&SE&!SI	0.0100	n/a	n/a	0.0202
D(HL)	CLK&RN&!SE&SI	0.0100	n/a	n/a	0.0567
D(HL)	CLK&RN&SE&SI	0.0100	n/a	n/a	0.0091
D(HL)	!CLK&RN&!SE&!SI	0.0100	n/a	n/a	0.3386
D(HL)	!CLK&RN&SE&!SI	0.0100	n/a	n/a	0.0203
D(HL)	!CLK&RN&!SE&SI	0.0100	n/a	n/a	0.3386
D(HL)	!CLK&RN&SE&SI	0.0100	n/a	n/a	0.0100
SE(LH)	!CLK&!D&!RN&!SI	0.0100	n/a	n/a	0.0025
SE(LH)	!CLK&!D&!RN&SI	0.0100	n/a	n/a	0.2023
SE(LH)	!CLK&D&!RN&!SI	0.0100	n/a	n/a	0.3723
SE(LH)	!CLK&D&!RN&SI	0.0100	n/a	n/a	-0.0060
SE(LH)	CLK&!D&!RN&!SI	0.0100	n/a	n/a	0.0012
SE(LH)	CLK&!D&!RN&SI	0.0100	n/a	n/a	-0.0048
SE(LH)	CLK&D&!RN&!SI	0.0100	n/a	n/a	0.0036
SE(LH)	CLK&D&!RN&SI	0.0100	n/a	n/a	-0.0080
SE(LH)	!CLK&D&RN&!SI	0.0100	n/a	n/a	0.3593
SE(LH)	!CLK&D&RN&SI	0.0100	n/a	n/a	-0.0060
SE(LH)	CLK&D&RN&!SI	0.0100	n/a	n/a	0.0400
SE(LH)	CLK&D&RN&SI	0.0100	n/a	n/a	-0.0077
SE(LH)	!CLK&!D&RN&!SI	0.0100	n/a	n/a	0.0024
SE(LH)	!CLK&!D&RN&SI	0.0100	n/a	n/a	0.2080
SE(LH)	CLK&!D&RN&!SI	0.0100	n/a	n/a	0.0013
SE(LH)	CLK&!D&RN&SI	0.0100	n/a	n/a	-0.0048
CLK(LH)	!D&!RN&!SE&!SI	0.0100	n/a	n/a	0.2289

continues on next page

Table 128 – continued from previous page

CLK(LH)	!D&!RN&!SE&SI	0.0100	n/a	n/a	0.2289
CLK(LH)	!D&!RN&SE&!SI	0.0100	n/a	n/a	0.2290
CLK(LH)	!D&!RN&SE&SI	0.0100	n/a	n/a	0.4819
CLK(LH)	D&!RN&!SE&!SI	0.0100	n/a	n/a	0.4817
CLK(LH)	D&!RN&!SE&SI	0.0100	n/a	n/a	0.4817
CLK(LH)	D&!RN&SE&!SI	0.0100	n/a	n/a	0.2289
CLK(LH)	D&!RN&SE&SI	0.0100	n/a	n/a	0.4819
CLK(LH)	D&RN&!SE&!SI	0.0100	n/a	n/a	0.2240
CLK(LH)	D&RN&SE&!SI	0.0100	n/a	n/a	0.2289
CLK(LH)	D&RN&!SE&SI	0.0100	n/a	n/a	0.2240
CLK(LH)	D&RN&SE&SI	0.0100	n/a	n/a	0.2239
CLK(LH)	!D&RN&!SE&!SI	0.0100	n/a	n/a	0.2289
CLK(LH)	!D&RN&SE&!SI	0.0100	n/a	n/a	0.2290
CLK(LH)	!D&RN&!SE&SI	0.0100	n/a	n/a	0.2289
CLK(LH)	!D&RN&SE&SI	0.0100	n/a	n/a	0.2240
SI(LH)	!CLK&!D&!RN&!SE	0.0100	n/a	n/a	-0.0198
SI(LH)	!CLK&!D&!RN&SE	0.0100	n/a	n/a	0.2014
SI(LH)	!CLK&D&!RN&!SE	0.0100	n/a	n/a	-0.0183
SI(LH)	!CLK&D&!RN&SE	0.0100	n/a	n/a	0.1884
SI(LH)	CLK&!D&!RN&!SE	0.0100	n/a	n/a	-0.0198
SI(LH)	CLK&!D&!RN&SE	0.0100	n/a	n/a	-0.0158
SI(LH)	CLK&D&!RN&!SE	0.0100	n/a	n/a	-0.0188
SI(LH)	CLK&D&!RN&SE	0.0100	n/a	n/a	-0.0158
SI(LH)	!CLK&D&RN&!SE	0.0100	n/a	n/a	-0.0183
SI(LH)	!CLK&D&RN&SE	0.0100	n/a	n/a	0.1941
SI(LH)	CLK&D&RN&!SE	0.0100	n/a	n/a	-0.0184
SI(LH)	CLK&D&RN&SE	0.0100	n/a	n/a	-0.0158
SI(LH)	!CLK&!D&RN&!SE	0.0100	n/a	n/a	-0.0198
SI(LH)	!CLK&!D&RN&SE	0.0100	n/a	n/a	0.2072
SI(LH)	CLK&!D&RN&!SE	0.0100	n/a	n/a	-0.0198
SI(LH)	CLK&!D&RN&SE	0.0100	n/a	n/a	-0.0158
SE(HL)	!CLK&!D&!RN&!SI	0.0100	n/a	n/a	0.1317
SE(HL)	!CLK&!D&!RN&SI	0.0100	n/a	n/a	0.4774
SE(HL)	!CLK&D&!RN&!SI	0.0100	n/a	n/a	0.3297
SE(HL)	!CLK&D&!RN&SI	0.0100	n/a	n/a	0.1337
SE(HL)	CLK&!D&!RN&!SI	0.0100	n/a	n/a	0.1363
SE(HL)	CLK&!D&!RN&SI	0.0100	n/a	n/a	0.1354
SE(HL)	CLK&D&!RN&!SI	0.0100	n/a	n/a	0.1354
SE(HL)	CLK&D&!RN&SI	0.0100	n/a	n/a	0.1383
SE(HL)	!CLK&D&RN&!SI	0.0100	n/a	n/a	0.3356
SE(HL)	!CLK&D&RN&SI	0.0100	n/a	n/a	0.1338
SE(HL)	CLK&D&RN&!SI	0.0100	n/a	n/a	0.1368
SE(HL)	CLK&D&RN&SI	0.0100	n/a	n/a	0.1337
SE(HL)	!CLK&!D&RN&!SI	0.0100	n/a	n/a	0.1317
SE(HL)	!CLK&!D&RN&SI	0.0100	n/a	n/a	0.4649
SE(HL)	CLK&!D&RN&!SI	0.0100	n/a	n/a	0.1315
SE(HL)	CLK&!D&RN&SI	0.0100	n/a	n/a	0.1833
CLK(HL)	!D&!RN&!SE&!SI	0.0100	n/a	n/a	0.3422
CLK(HL)	!D&!RN&!SE&SI	0.0100	n/a	n/a	0.3422
CLK(HL)	!D&!RN&SE&!SI	0.0100	n/a	n/a	0.3616
CLK(HL)	!D&!RN&SE&SI	0.0100	n/a	n/a	0.4922
CLK(HL)	D&!RN&!SE&!SI	0.0100	n/a	n/a	0.4627

continues on next page

Table 128 – continued from previous page

CLK(HL)	D&!RN&!SE&SI	0.0100	n/a	n/a	0.4627
CLK(HL)	D&!RN&SE&!SI	0.0100	n/a	n/a	0.3841
CLK(HL)	D&!RN&SE&SI	0.0100	n/a	n/a	0.4776
CLK(HL)	D&RN&!SE&!SI	0.0100	n/a	n/a	0.2817
CLK(HL)	D&RN&SE&!SI	0.0100	n/a	n/a	0.2822
CLK(HL)	D&RN&!SE&SI	0.0100	n/a	n/a	0.2817
CLK(HL)	D&RN&SE&SI	0.0100	n/a	n/a	0.2816
CLK(HL)	!D&RN&!SE&!SI	0.0100	n/a	n/a	0.2822
CLK(HL)	!D&RN&SE&!SI	0.0100	n/a	n/a	0.2822
CLK(HL)	!D&RN&!SE&SI	0.0100	n/a	n/a	0.2822
CLK(HL)	!D&RN&SE&SI	0.0100	n/a	n/a	0.2816
SI(HL)	!CLK&!D&!RN&!SE	0.0100	n/a	n/a	0.0203
SI(HL)	!CLK&!D&!RN&SE	0.0100	n/a	n/a	0.4051
SI(HL)	!CLK&D&!RN&!SE	0.0100	n/a	n/a	0.0202
SI(HL)	!CLK&D&!RN&SE	0.0100	n/a	n/a	0.4128
SI(HL)	CLK&!D&!RN&!SE	0.0100	n/a	n/a	0.0202
SI(HL)	CLK&!D&!RN&SE	0.0100	n/a	n/a	0.0217
SI(HL)	CLK&D&!RN&!SE	0.0100	n/a	n/a	0.0202
SI(HL)	CLK&D&!RN&SE	0.0100	n/a	n/a	0.0217
SI(HL)	!CLK&D&RN&!SE	0.0100	n/a	n/a	0.0202
SI(HL)	!CLK&D&RN&SE	0.0100	n/a	n/a	0.3997
SI(HL)	CLK&D&RN&!SE	0.0100	n/a	n/a	0.0202
SI(HL)	CLK&D&RN&SE	0.0100	n/a	n/a	0.0730
SI(HL)	!CLK&!D&RN&!SE	0.0100	n/a	n/a	0.0203
SI(HL)	!CLK&!D&RN&SE	0.0100	n/a	n/a	0.3922
SI(HL)	CLK&!D&RN&!SE	0.0100	n/a	n/a	0.0202
SI(HL)	CLK&!D&RN&SE	0.0100	n/a	n/a	0.0876
D(LH)	!CLK&!RN&!SE&!SI	0.0100	n/a	n/a	0.1773
D(LH)	!CLK&!RN&!SE&SI	0.0100	n/a	n/a	0.1773
D(LH)	!CLK&!RN&SE&!SI	0.0100	n/a	n/a	-0.0186
D(LH)	!CLK&!RN&SE&SI	0.0100	n/a	n/a	-0.0064
D(LH)	CLK&!RN&!SE&!SI	0.0100	n/a	n/a	-0.0154
D(LH)	CLK&!RN&!SE&SI	0.0100	n/a	n/a	-0.0154
D(LH)	CLK&!RN&SE&!SI	0.0100	n/a	n/a	-0.0197
D(LH)	CLK&!RN&SE&SI	0.0100	n/a	n/a	-0.0122
D(LH)	CLK&RN&!SE&!SI	0.0100	n/a	n/a	-0.0155
D(LH)	CLK&RN&SE&!SI	0.0100	n/a	n/a	-0.0197
D(LH)	CLK&RN&!SE&SI	0.0100	n/a	n/a	-0.0154
D(LH)	CLK&RN&SE&SI	0.0100	n/a	n/a	-0.0066
D(LH)	!CLK&RN&!SE&!SI	0.0100	n/a	n/a	0.1831
D(LH)	!CLK&RN&SE&!SI	0.0100	n/a	n/a	-0.0186
D(LH)	!CLK&RN&!SE&SI	0.0100	n/a	n/a	0.1830
D(LH)	!CLK&RN&SE&SI	0.0100	n/a	n/a	-0.0064
RN(HL)	!CLK&!D&!SE&!SI	0.0100	n/a	n/a	0.0527
RN(HL)	!CLK&D&SE&!SI	0.0100	n/a	n/a	0.0527
RN(HL)	!CLK&D&!SE&SI	0.0100	n/a	n/a	0.0513
RN(HL)	!CLK&D&SE&SI	0.0100	n/a	n/a	0.0513
RN(HL)	CLK&D&!SE&!SI	0.0100	n/a	n/a	0.0540
RN(HL)	CLK&D&SE&!SI	0.0100	n/a	n/a	0.0541
RN(HL)	CLK&D&!SE&SI	0.0100	n/a	n/a	0.0540
RN(HL)	CLK&D&SE&SI	0.0100	n/a	n/a	0.0540
RN(HL)	!CLK&!D&SE&!SI	0.0100	n/a	n/a	0.0527

continues on next page

Table 128 – continued from previous page

RN(HL)	!CLK&!D&!SE&SI	0.0100	n/a	n/a	0.0527
RN(HL)	!CLK&!D&SE&SI	0.0100	n/a	n/a	0.0513
RN(HL)	CLK&!D&!SE&!SI	0.0100	n/a	n/a	0.0541
RN(HL)	CLK&!D&SE&!SI	0.0100	n/a	n/a	0.0541
RN(HL)	CLK&!D&!SE&SI	0.0100	n/a	n/a	0.0541
RN(HL)	CLK&!D&SE&SI	0.0100	n/a	n/a	0.0540
RN(HL)	!CLK&D&!SE&!SI	0.0100	n/a	n/a	0.0513
RN(LH)	!CLK&!D&!SE&!SI	0.0100	n/a	n/a	-0.0496
RN(LH)	!CLK&!D&!SE&SI	0.0100	n/a	n/a	-0.0496
RN(LH)	!CLK&!D&SE&!SI	0.0100	n/a	n/a	-0.0496
RN(LH)	!CLK&!D&SE&SI	0.0100	n/a	n/a	-0.0462
RN(LH)	!CLK&D&!SE&!SI	0.0100	n/a	n/a	-0.0462
RN(LH)	!CLK&D&!SE&SI	0.0100	n/a	n/a	-0.0462
RN(LH)	!CLK&D&SE&!SI	0.0100	n/a	n/a	-0.0496
RN(LH)	!CLK&D&SE&SI	0.0100	n/a	n/a	-0.0462
RN(LH)	CLK&!D&!SE&!SI	0.0100	n/a	n/a	-0.0496
RN(LH)	CLK&!D&!SE&SI	0.0100	n/a	n/a	-0.0496
RN(LH)	CLK&!D&SE&!SI	0.0100	n/a	n/a	-0.0496
RN(LH)	CLK&!D&SE&SI	0.0100	n/a	n/a	-0.0496
RN(LH)	CLK&D&!SE&!SI	0.0100	n/a	n/a	-0.0496
RN(LH)	CLK&D&!SE&SI	0.0100	n/a	n/a	-0.0496
RN(LH)	CLK&D&SE&!SI	0.0100	n/a	n/a	-0.0496
RN(LH)	CLK&D&SE&SI	0.0100	n/a	n/a	-0.0496

LEAKAGE POWER

When Condition	Power (nW)
!CLK&!D&!RN&!SE&!SI	0.5301
!CLK&!D&!RN&!SE&SI	0.5315
!CLK&!D&!RN&SE&!SI	0.5679
!CLK&!D&!RN&SE&SI	0.5947
!CLK&D&!RN&!SE&!SI	0.5250
!CLK&D&!RN&!SE&SI	0.5250
!CLK&D&!RN&SE&!SI	0.6093
!CLK&D&!RN&SE&SI	0.5591
CLK&!D&!RN&!SE&!SI	0.5075
CLK&!D&!RN&!SE&SI	0.5075
CLK&!D&!RN&SE&!SI	0.5062
CLK&!D&!RN&SE&SI	0.5091
CLK&D&!RN&!SE&!SI	0.5106
CLK&D&!RN&!SE&SI	0.5106
CLK&D&!RN&SE&!SI	0.5063
CLK&D&!RN&SE&SI	0.5092
CLK&!D&RN&!SE&!SI	0.5317
CLK&!D&RN&!SE&SI	0.5317
CLK&!D&RN&SE&!SI	0.5302
CLK&D&RN&SE&!SI	0.5302

continues on next page

Table 129 – continued from previous page

CLK&!D&RN&SE&SI	0.7184
CLK&D&RN&!SE&!SI	0.6810
CLK&D&RN&!SE&SI	0.6810
CLK&D&RN&SE&SI	0.7002
!CLK&!D&RN&!SE&!SI	0.5303
!CLK&!D&RN&!SE&SI	0.5318
!CLK&!D&RN&SE&!SI	0.5682
!CLK&!D&RN&SE&SI	0.6754
!CLK&D&RN&!SE&!SI	0.6058
!CLK&D&RN&!SE&SI	0.6058
!CLK&D&RN&SE&!SI	0.6096
!CLK&D&RN&SE&SI	0.6399

gf180mcu_fd_sc_mcu7t5v0__sdffrsnq_1

gf180mcu_fd_sc_mcu7t5v0__sdffrsnq_1 symbol

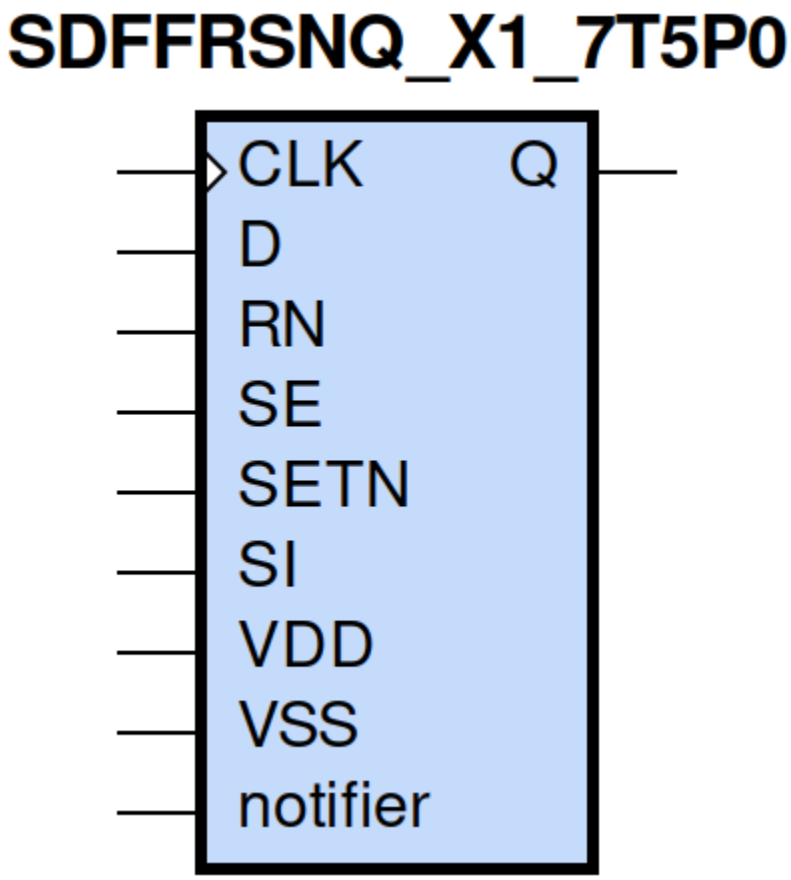

gf180mcu_fd_sc_mcu7t5v0__sdffrsnq_1 schematic

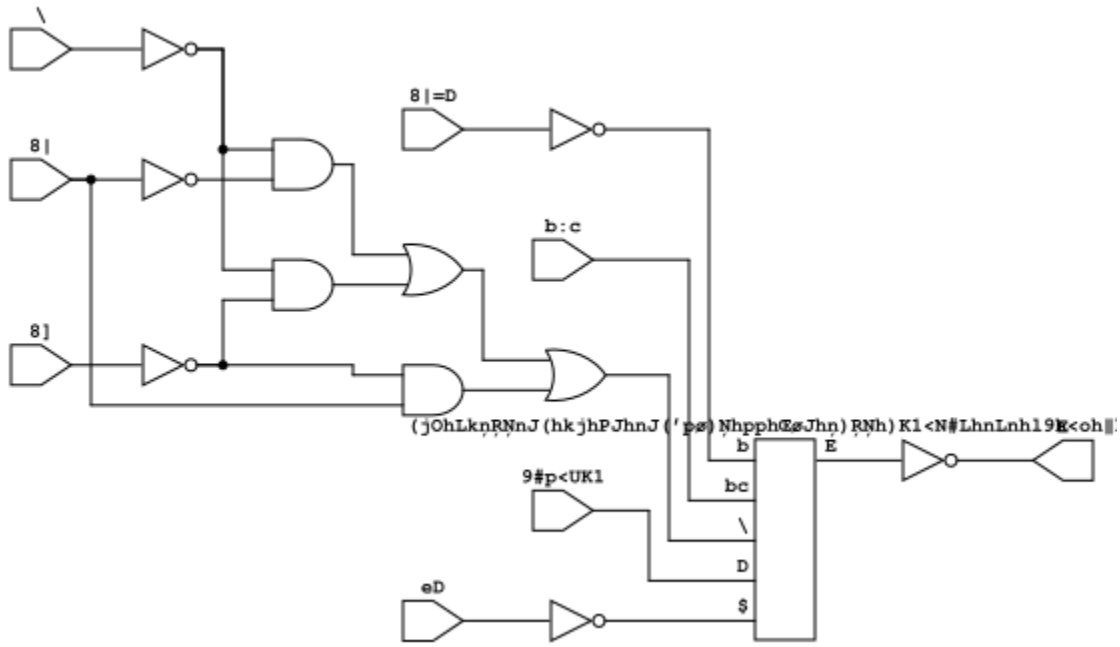

gf180mcu_fd_sc_mcu7t5v0__sdffrsnq_1 layout

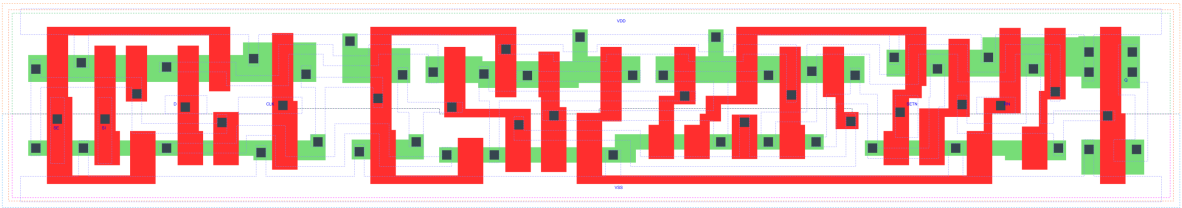

SDFFRSNQ_X1 is a positive edge triggered scan D-type flip flop, active low set/reset, 1X drive strength

Attributes

Attribute	Value
area	105.369600 μm^2

TRUTH TABLE

Input						Output
RN	SETN	SE	SI	D	CLK	Q
H	H	L	X	L	↑	L
H	H	L	X	H	↑	H
H	H	H	L	X	↑	L
H	H	H	H	X	↑	H
H	L	X	X	X	X	H
L	H	X	X	X	X	L
L	L	X	X	X	X	L

FUNCTIONAL SCHEMATIC

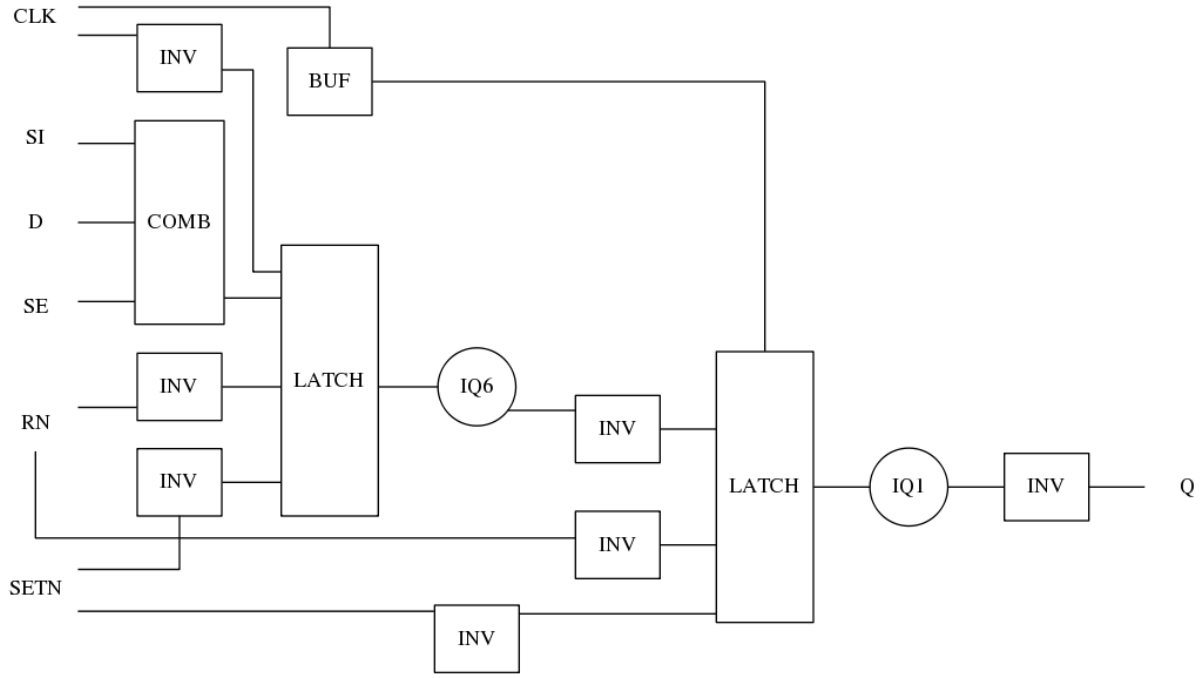

CONSTRAINTS

Constraint Pin	Related Pin	setup(ns)	hold(ns)
SE(LH)	CLK(LH)	0.6010	-0.2460
SE(LH)	CLK(LH)	0.8010	-0.0860
SE(HL)	CLK(LH)	0.6870	-0.0520
SE(HL)	CLK(LH)	0.6810	-0.3490
SI(HL)	CLK(LH)	0.7670	-0.0860
SI(HL)	CLK(LH)	0.7670	-0.0520
SI(LH)	CLK(LH)	0.6470	-0.2920

continues on next page

Table 130 – continued from previous page

SI(LH)	CLK(LH)	0.6300	-0.2860
D(HL)	CLK(LH)	0.6700	-0.0340
D(HL)	CLK(LH)	0.6700	-0.0400
D(LH)	CLK(LH)	0.5670	-0.2350
D(LH)	CLK(LH)	0.5670	-0.2350
SETN(LH)	RN(LH)	0.0170	0.0740
SETN(LH)	RN(LH)	0.0170	0.0740
SETN(LH)	RN(LH)	0.0170	0.0740
SETN(LH)	RN(LH)	0.0170	0.0740
SETN(LH)	RN(LH)	-0.0340	0.0970
SETN(LH)	RN(LH)	-0.0340	0.0970
SETN(LH)	RN(LH)	-0.0340	0.0970
SETN(LH)	RN(LH)	-0.0340	0.0970
SETN(LH)	RN(LH)	0.0170	0.0740
SETN(LH)	RN(LH)	0.0170	0.0740
SETN(LH)	RN(LH)	0.0170	0.0740
SETN(LH)	RN(LH)	-0.0340	0.0970
SETN(LH)	RN(LH)	-0.0340	0.0970
SETN(LH)	RN(LH)	-0.0340	0.0970
SETN(LH)	RN(LH)	-0.0340	0.0970
SETN(LH)	RN(LH)	0.0170	0.0740
RN(LH)	SETN(LH)	0.0740	0.0170
RN(LH)	SETN(LH)	0.0740	0.0170
RN(LH)	SETN(LH)	0.0740	0.0170
RN(LH)	SETN(LH)	0.0740	0.0170
RN(LH)	SETN(LH)	0.0970	-0.0340
RN(LH)	SETN(LH)	0.0970	-0.0340
RN(LH)	SETN(LH)	0.0970	-0.0340
RN(LH)	SETN(LH)	0.0970	-0.0340
RN(LH)	SETN(LH)	0.0740	0.0170
RN(LH)	SETN(LH)	0.0740	0.0170
RN(LH)	SETN(LH)	0.0740	0.0170
RN(LH)	SETN(LH)	0.0970	-0.0340
RN(LH)	SETN(LH)	0.0970	-0.0340
RN(LH)	SETN(LH)	0.0970	-0.0340
RN(LH)	SETN(LH)	0.0970	-0.0340
RN(LH)	SETN(LH)	0.0740	0.0170

Constraint Pin	Related Pin	recovery(ns)	removal(ns)
SETN(LH)	CLK(LH)	-0.0110	0.2920
SETN(LH)	CLK(LH)	-0.0110	0.2920
SETN(LH)	CLK(LH)	-0.0110	0.2920
SETN(LH)	CLK(LH)	-0.0110	0.2920
RN(LH)	CLK(LH)	-0.2520	0.4180
RN(LH)	CLK(LH)	-0.2520	0.4180
RN(LH)	CLK(LH)	-0.2520	0.4180
RN(LH)	CLK(LH)	-0.2520	0.4180

Constraint Pin	Related Pin	Minimum Pulse Width(ns)
CLK(HLH)	CLK(HL)	0.8210
CLK(HLH)	CLK(HL)	0.8460
CLK(HLH)	CLK(HL)	0.8210
CLK(HLH)	CLK(HL)	0.7110
CLK(HLH)	CLK(HL)	0.6320
CLK(HLH)	CLK(HL)	0.9070
CLK(HLH)	CLK(HL)	0.6380
CLK(HLH)	CLK(HL)	0.6750
CLK(LHL)	CLK(LH)	0.4660
CLK(LHL)	CLK(LH)	0.4660
CLK(LHL)	CLK(LH)	0.4660
CLK(LHL)	CLK(LH)	0.5150
CLK(LHL)	CLK(LH)	0.5150
CLK(LHL)	CLK(LH)	0.4660
CLK(LHL)	CLK(LH)	0.5150
CLK(LHL)	CLK(LH)	0.5150
SETN(HLH)	SETN(HL)	0.4660
SETN(HLH)	SETN(HL)	0.4660
SETN(HLH)	SETN(HL)	0.4660
SETN(HLH)	SETN(HL)	0.4660
SETN(HLH)	SETN(HL)	0.4850
SETN(HLH)	SETN(HL)	0.4850
SETN(HLH)	SETN(HL)	0.4850
SETN(HLH)	SETN(HL)	0.4850
SETN(HLH)	SETN(HL)	0.4660
SETN(HLH)	SETN(HL)	0.4660
SETN(HLH)	SETN(HL)	0.4660
SETN(HLH)	SETN(HL)	0.4850
SETN(HLH)	SETN(HL)	0.4850
SETN(HLH)	SETN(HL)	0.4850
SETN(HLH)	SETN(HL)	0.4850
SETN(HLH)	SETN(HL)	0.4660
RN(HLH)	RN(HL)	0.3490
RN(HLH)	RN(HL)	0.3490
RN(HLH)	RN(HL)	0.3490
RN(HLH)	RN(HL)	0.3490
RN(HLH)	RN(HL)	0.4660
RN(HLH)	RN(HL)	0.4660
RN(HLH)	RN(HL)	0.4660
RN(HLH)	RN(HL)	0.4660
RN(HLH)	RN(HL)	0.3490
RN(HLH)	RN(HL)	0.3490
RN(HLH)	RN(HL)	0.3490
RN(HLH)	RN(HL)	0.4660
RN(HLH)	RN(HL)	0.4660
RN(HLH)	RN(HL)	0.4660
RN(HLH)	RN(HL)	0.4660
RN(HLH)	RN(HL)	0.3490

continues on next page

Table 131 – continued from previous page

PIN CAPACITANCE (pf)

Pin	Type	Capacitance (pf)
SE	input	0.0061
SI	input	0.0027
D	input	0.0027
CLK	input	0.0036
SETN	input	0.0064
RN	input	0.0073

DELAY AND OUTPUT TRANSITION TIME corresponding to min slew and load

Input Pin	Output	When Condition	Tin (ns)	Out Load (pf)	Delay (ns)	Tout (ns)
CLK(LH)	Q(HL)	!D&RN&!SE&SETN&!SI	0.0100	0.0010	0.7121	0.0445
CLK(LH)	Q(HL)	!D&RN&!SE&SETN&SI	0.0100	0.0010	0.7121	0.0445
CLK(LH)	Q(HL)	!D&RN&SE&SETN&!SI	0.0100	0.0010	0.7121	0.0445
CLK(LH)	Q(HL)	D&RN&SE&SETN&!SI	0.0100	0.0010	0.7121	0.0444
CLK(LH)	Q(LH)	!D&RN&SE&SETN&SI	0.0100	0.0010	0.7607	0.0571
CLK(LH)	Q(LH)	D&RN&!SE&SETN&!SI	0.0100	0.0010	0.7609	0.0571
CLK(LH)	Q(LH)	D&RN&!SE&SETN&SI	0.0100	0.0010	0.7609	0.0571
CLK(LH)	Q(LH)	D&RN&SE&SETN&SI	0.0100	0.0010	0.7607	0.0571
SETN(HL)	Q(LH)	!CLK&!D&RN&!SE&!SI	0.0100	0.0010	0.6442	0.0567
SETN(HL)	Q(LH)	!CLK&D&RN&SE&!SI	0.0100	0.0010	0.6442	0.0567
SETN(HL)	Q(LH)	!CLK&D&RN&!SE&SI	0.0100	0.0010	0.6443	0.0566
SETN(HL)	Q(LH)	!CLK&D&RN&SE&SI	0.0100	0.0010	0.6443	0.0567
SETN(HL)	Q(LH)	CLK&D&RN&!SE&!SI	0.0100	0.0010	0.6919	0.0569
SETN(HL)	Q(LH)	CLK&D&RN&SE&!SI	0.0100	0.0010	0.6919	0.0566
SETN(HL)	Q(LH)	CLK&D&RN&!SE&SI	0.0100	0.0010	0.6919	0.0569
SETN(HL)	Q(LH)	CLK&D&RN&SE&SI	0.0100	0.0010	0.6919	0.0569
SETN(HL)	Q(LH)	!CLK&!D&RN&SE&!SI	0.0100	0.0010	0.6442	0.0567
SETN(HL)	Q(LH)	!CLK&!D&RN&!SE&SI	0.0100	0.0010	0.6442	0.0567
SETN(HL)	Q(LH)	!CLK&!D&RN&SE&SI	0.0100	0.0010	0.6443	0.0567
SETN(HL)	Q(LH)	CLK&!D&RN&!SE&!SI	0.0100	0.0010	0.6919	0.0566
SETN(HL)	Q(LH)	CLK&!D&RN&SE&!SI	0.0100	0.0010	0.6919	0.0566
SETN(HL)	Q(LH)	CLK&!D&RN&!SE&SI	0.0100	0.0010	0.6919	0.0566
SETN(HL)	Q(LH)	CLK&!D&RN&SE&SI	0.0100	0.0010	0.6919	0.0569
SETN(HL)	Q(LH)	!CLK&D&RN&!SE&!SI	0.0100	0.0010	0.6443	0.0566
RN(HL)	Q(HL)	!CLK&!D&!SE&SETN&!SI	0.0100	0.0010	0.1941	0.0410
RN(HL)	Q(HL)	!CLK&D&SE&SETN&!SI	0.0100	0.0010	0.1941	0.0410
RN(HL)	Q(HL)	!CLK&D&!SE&SETN&SI	0.0100	0.0010	0.1940	0.0411
RN(HL)	Q(HL)	!CLK&D&SE&SETN&SI	0.0100	0.0010	0.1940	0.0411
RN(HL)	Q(HL)	CLK&D&!SE&SETN&!SI	0.0100	0.0010	0.1941	0.0409

continues on next page

Table 132 – continued from previous page

RN(HL)	Q(HL)	CLK&D&SE&SETN&!SI	0.0100	0.0010	0.1941	0.0409
RN(HL)	Q(HL)	CLK&D&!SE&SETN&SI	0.0100	0.0010	0.1941	0.0409
RN(HL)	Q(HL)	CLK&D&SE&SETN&SI	0.0100	0.0010	0.1941	0.0408
RN(HL)	Q(HL)	!CLK&!D&!SE&!SETN&!SI	0.0100	0.0010	0.1938	0.0405
RN(HL)	Q(HL)	!CLK&!D&!SE&!SETN&SI	0.0100	0.0010	0.1938	0.0405
RN(HL)	Q(HL)	!CLK&!D&SE&!SETN&!SI	0.0100	0.0010	0.1938	0.0405
RN(HL)	Q(HL)	!CLK&!D&SE&!SETN&SI	0.0100	0.0010	0.1938	0.0405
RN(HL)	Q(HL)	!CLK&D&!SE&!SETN&!SI	0.0100	0.0010	0.1938	0.0405
RN(HL)	Q(HL)	!CLK&D&!SE&!SETN&SI	0.0100	0.0010	0.1938	0.0405
RN(HL)	Q(HL)	!CLK&D&SE&!SETN&!SI	0.0100	0.0010	0.1938	0.0405
RN(HL)	Q(HL)	!CLK&D&SE&!SETN&SI	0.0100	0.0010	0.1938	0.0405
RN(HL)	Q(HL)	CLK&!D&!SE&!SETN&!SI	0.0100	0.0010	0.1940	0.0405
RN(HL)	Q(HL)	CLK&!D&!SE&!SETN&SI	0.0100	0.0010	0.1940	0.0405
RN(HL)	Q(HL)	CLK&!D&SE&!SETN&!SI	0.0100	0.0010	0.1940	0.0405
RN(HL)	Q(HL)	CLK&!D&SE&!SETN&SI	0.0100	0.0010	0.1940	0.0405
RN(HL)	Q(HL)	CLK&D&!SE&!SETN&!SI	0.0100	0.0010	0.1940	0.0405
RN(HL)	Q(HL)	CLK&D&!SE&!SETN&SI	0.0100	0.0010	0.1940	0.0405
RN(HL)	Q(HL)	CLK&D&SE&!SETN&!SI	0.0100	0.0010	0.1940	0.0405
RN(HL)	Q(HL)	CLK&D&SE&!SETN&SI	0.0100	0.0010	0.1940	0.0405
RN(HL)	Q(HL)	!CLK&!D&SE&SETN&!SI	0.0100	0.0010	0.1941	0.0410
RN(HL)	Q(HL)	!CLK&!D&!SE&SETN&SI	0.0100	0.0010	0.1941	0.0410
RN(HL)	Q(HL)	!CLK&!D&SE&SETN&SI	0.0100	0.0010	0.1940	0.0411
RN(HL)	Q(HL)	CLK&!D&!SE&SETN&!SI	0.0100	0.0010	0.1941	0.0409
RN(HL)	Q(HL)	CLK&!D&SE&SETN&!SI	0.0100	0.0010	0.1941	0.0409
RN(HL)	Q(HL)	CLK&!D&!SE&SETN&SI	0.0100	0.0010	0.1941	0.0409
RN(HL)	Q(HL)	CLK&!D&SE&SETN&SI	0.0100	0.0010	0.1941	0.0409
RN(HL)	Q(HL)	!CLK&D&!SE&SETN&!SI	0.0100	0.0010	0.1940	0.0411
RN(LH)	Q(LH)	!CLK&!D&!SE&!SETN&!SI	0.0100	0.0010	0.3004	0.0546
RN(LH)	Q(LH)	!CLK&!D&!SE&!SETN&SI	0.0100	0.0010	0.3004	0.0546
RN(LH)	Q(LH)	!CLK&!D&SE&!SETN&!SI	0.0100	0.0010	0.3004	0.0546
RN(LH)	Q(LH)	!CLK&!D&SE&!SETN&SI	0.0100	0.0010	0.3004	0.0546
RN(LH)	Q(LH)	!CLK&D&!SE&!SETN&!SI	0.0100	0.0010	0.3004	0.0546
RN(LH)	Q(LH)	!CLK&D&!SE&!SETN&SI	0.0100	0.0010	0.3004	0.0546
RN(LH)	Q(LH)	!CLK&D&SE&!SETN&!SI	0.0100	0.0010	0.3004	0.0546
RN(LH)	Q(LH)	!CLK&D&SE&!SETN&SI	0.0100	0.0010	0.3004	0.0546
RN(LH)	Q(LH)	CLK&!D&!SE&!SETN&!SI	0.0100	0.0010	0.3023	0.0547
RN(LH)	Q(LH)	CLK&!D&!SE&!SETN&SI	0.0100	0.0010	0.3023	0.0547
RN(LH)	Q(LH)	CLK&!D&SE&!SETN&!SI	0.0100	0.0010	0.3023	0.0547
RN(LH)	Q(LH)	CLK&!D&SE&!SETN&SI	0.0100	0.0010	0.3023	0.0547
RN(LH)	Q(LH)	CLK&D&!SE&!SETN&!SI	0.0100	0.0010	0.3023	0.0547
RN(LH)	Q(LH)	CLK&D&!SE&!SETN&SI	0.0100	0.0010	0.3023	0.0547
RN(LH)	Q(LH)	CLK&D&SE&!SETN&!SI	0.0100	0.0010	0.3023	0.0547
RN(LH)	Q(LH)	CLK&D&SE&!SETN&SI	0.0100	0.0010	0.3023	0.0547

DYNAMIC ENERGY

Input Pin	When Condition	Tin (ns)	Output	Out Load (pf)	Energy (uW/MHz)

continues on next page

Table 133 – continued from previous page

CLK	!D&RN&!SE&SETN&!SI	0.0100	Q(HL)	0.0010	0.6326
CLK	!D&RN&!SE&SETN&SI	0.0100	Q(HL)	0.0010	0.6326
CLK	!D&RN&SE&SETN&!SI	0.0100	Q(HL)	0.0010	0.6327
CLK	D&RN&SE&SETN&!SI	0.0100	Q(HL)	0.0010	0.6326
CLK	!D&RN&SE&SETN&SI	0.0100	Q(LH)	0.0010	0.7273
CLK	D&RN&!SE&SETN&!SI	0.0100	Q(LH)	0.0010	0.7274
CLK	D&RN&!SE&SETN&SI	0.0100	Q(LH)	0.0010	0.7274
CLK	D&RN&SE&SETN&SI	0.0100	Q(LH)	0.0010	0.7273
SETN	!CLK&!D&RN&!SE&!SI	0.0100	Q(LH)	0.0010	0.5987
SETN	!CLK&D&RN&SE&!SI	0.0100	Q(LH)	0.0010	0.5987
SETN	!CLK&D&RN&!SE&SI	0.0100	Q(LH)	0.0010	0.4852
SETN	!CLK&D&RN&SE&SI	0.0100	Q(LH)	0.0010	0.4852
SETN	CLK&D&RN&!SE&!SI	0.0100	Q(LH)	0.0010	0.6960
SETN	CLK&D&RN&SE&!SI	0.0100	Q(LH)	0.0010	0.6961
SETN	CLK&D&RN&!SE&SI	0.0100	Q(LH)	0.0010	0.6960
SETN	CLK&D&RN&SE&SI	0.0100	Q(LH)	0.0010	0.6960
SETN	!CLK&!D&RN&SE&!SI	0.0100	Q(LH)	0.0010	0.5987
SETN	!CLK&!D&RN&!SE&SI	0.0100	Q(LH)	0.0010	0.5987
SETN	!CLK&!D&RN&SE&SI	0.0100	Q(LH)	0.0010	0.4852
SETN	CLK&!D&RN&!SE&!SI	0.0100	Q(LH)	0.0010	0.6961
SETN	CLK&!D&RN&SE&!SI	0.0100	Q(LH)	0.0010	0.6961
SETN	CLK&!D&RN&!SE&SI	0.0100	Q(LH)	0.0010	0.6961
SETN	CLK&!D&RN&SE&SI	0.0100	Q(LH)	0.0010	0.6960
SETN	!CLK&D&RN&!SE&!SI	0.0100	Q(LH)	0.0010	0.4852
RN	!CLK&!D&!SE&SETN&!SI	0.0100	Q(HL)	0.0010	0.3939
RN	!CLK&D&SE&SETN&!SI	0.0100	Q(HL)	0.0010	0.3939
RN	!CLK&D&!SE&SETN&SI	0.0100	Q(HL)	0.0010	0.3941
RN	!CLK&D&SE&SETN&SI	0.0100	Q(HL)	0.0010	0.3941
RN	CLK&D&!SE&SETN&!SI	0.0100	Q(HL)	0.0010	0.6180
RN	CLK&D&SE&SETN&!SI	0.0100	Q(HL)	0.0010	0.6187
RN	CLK&D&!SE&SETN&SI	0.0100	Q(HL)	0.0010	0.6180
RN	CLK&D&SE&SETN&SI	0.0100	Q(HL)	0.0010	0.6179
RN	!CLK&!D&!SE&!SETN&!SI	0.0100	Q(HL)	0.0010	0.2740
RN	!CLK&!D&!SE&!SETN&SI	0.0100	Q(HL)	0.0010	0.2740
RN	!CLK&!D&SE&!SETN&!SI	0.0100	Q(HL)	0.0010	0.2740
RN	!CLK&!D&SE&!SETN&SI	0.0100	Q(HL)	0.0010	0.2722
RN	!CLK&D&!SE&!SETN&!SI	0.0100	Q(HL)	0.0010	0.2722
RN	!CLK&D&!SE&!SETN&SI	0.0100	Q(HL)	0.0010	0.2722
RN	!CLK&D&SE&!SETN&!SI	0.0100	Q(HL)	0.0010	0.2740
RN	!CLK&D&SE&!SETN&SI	0.0100	Q(HL)	0.0010	0.2722
RN	CLK&!D&!SE&!SETN&!SI	0.0100	Q(HL)	0.0010	0.4188
RN	CLK&!D&!SE&!SETN&SI	0.0100	Q(HL)	0.0010	0.4188
RN	CLK&!D&SE&!SETN&!SI	0.0100	Q(HL)	0.0010	0.4188
RN	CLK&!D&SE&!SETN&SI	0.0100	Q(HL)	0.0010	0.4188
RN	CLK&D&!SE&!SETN&!SI	0.0100	Q(HL)	0.0010	0.4188
RN	CLK&D&!SE&!SETN&SI	0.0100	Q(HL)	0.0010	0.4188
RN	CLK&D&SE&!SETN&!SI	0.0100	Q(HL)	0.0010	0.4188
RN	CLK&D&SE&!SETN&SI	0.0100	Q(HL)	0.0010	0.4188
RN	!CLK&!D&SE&SETN&!SI	0.0100	Q(HL)	0.0010	0.3939
RN	!CLK&!D&!SE&SETN&SI	0.0100	Q(HL)	0.0010	0.3939
RN	!CLK&!D&SE&SETN&SI	0.0100	Q(HL)	0.0010	0.3941
RN	CLK&!D&!SE&SETN&!SI	0.0100	Q(HL)	0.0010	0.6187

continues on next page

Table 133 – continued from previous page

RN	CLK&!D&SE&SETN&!SI	0.0100	Q(HL)	0.0010	0.6187
RN	CLK&!D&!SE&SETN&SI	0.0100	Q(HL)	0.0010	0.6187
RN	CLK&!D&SE&SETN&SI	0.0100	Q(HL)	0.0010	0.6180
RN	!CLK&D&!SE&SETN&!SI	0.0100	Q(HL)	0.0010	0.3941
RN	!CLK&!D&!SE&!SETN&!SI	0.0100	Q(LH)	0.0010	0.1554
RN	!CLK&!D&!SE&!SETN&SI	0.0100	Q(LH)	0.0010	0.1554
RN	!CLK&!D&SE&!SETN&!SI	0.0100	Q(LH)	0.0010	0.1554
RN	!CLK&!D&SE&!SETN&SI	0.0100	Q(LH)	0.0010	0.1563
RN	!CLK&D&!SE&!SETN&!SI	0.0100	Q(LH)	0.0010	0.1563
RN	!CLK&D&!SE&!SETN&SI	0.0100	Q(LH)	0.0010	0.1563
RN	!CLK&D&SE&!SETN&!SI	0.0100	Q(LH)	0.0010	0.1554
RN	!CLK&D&SE&!SETN&SI	0.0100	Q(LH)	0.0010	0.1563
RN	CLK&!D&!SE&!SETN&!SI	0.0100	Q(LH)	0.0010	0.2490
RN	CLK&!D&!SE&!SETN&SI	0.0100	Q(LH)	0.0010	0.2490
RN	CLK&!D&SE&!SETN&!SI	0.0100	Q(LH)	0.0010	0.2490
RN	CLK&!D&SE&!SETN&SI	0.0100	Q(LH)	0.0010	0.2490
RN	CLK&D&!SE&!SETN&!SI	0.0100	Q(LH)	0.0010	0.2490
RN	CLK&D&!SE&!SETN&SI	0.0100	Q(LH)	0.0010	0.2490
RN	CLK&D&SE&!SETN&!SI	0.0100	Q(LH)	0.0010	0.2490
RN	CLK&D&SE&!SETN&SI	0.0100	Q(LH)	0.0010	0.2490
SETN(HL)	!CLK&!D&!RN&!SE&!SI	0.0100	n/a	n/a	0.3680
SETN(HL)	!CLK&!D&!RN&!SE&SI	0.0100	n/a	n/a	0.3680
SETN(HL)	!CLK&!D&!RN&SE&!SI	0.0100	n/a	n/a	0.3680
SETN(HL)	!CLK&!D&!RN&SE&SI	0.0100	n/a	n/a	0.2611
SETN(HL)	!CLK&D&!RN&!SE&!SI	0.0100	n/a	n/a	0.2611
SETN(HL)	!CLK&D&!RN&!SE&SI	0.0100	n/a	n/a	0.2611
SETN(HL)	!CLK&D&!RN&SE&!SI	0.0100	n/a	n/a	0.3680
SETN(HL)	!CLK&D&!RN&SE&SI	0.0100	n/a	n/a	0.2611
SETN(HL)	CLK&!D&!RN&!SE&!SI	0.0100	n/a	n/a	0.3680
SETN(HL)	CLK&!D&!RN&!SE&SI	0.0100	n/a	n/a	0.3680
SETN(HL)	CLK&!D&!RN&SE&!SI	0.0100	n/a	n/a	0.3680
SETN(HL)	CLK&!D&!RN&SE&SI	0.0100	n/a	n/a	0.3680
SETN(HL)	CLK&D&!RN&!SE&!SI	0.0100	n/a	n/a	0.3680
SETN(HL)	CLK&D&!RN&!SE&SI	0.0100	n/a	n/a	0.3680
SETN(HL)	CLK&D&!RN&SE&!SI	0.0100	n/a	n/a	0.3680
SETN(HL)	CLK&D&!RN&SE&SI	0.0100	n/a	n/a	0.3680
SETN(HL)	CLK&!D&RN&!SE&!SI	0.0100	n/a	n/a	0.0444
SETN(HL)	CLK&!D&RN&SE&!SI	0.0100	n/a	n/a	0.0444
SETN(HL)	CLK&!D&RN&!SE&SI	0.0100	n/a	n/a	0.0444
SETN(HL)	CLK&!D&RN&SE&SI	0.0100	n/a	n/a	0.0444
SETN(HL)	!CLK&D&RN&!SE&!SI	0.0100	n/a	n/a	0.0444
SETN(HL)	!CLK&D&RN&SE&!SI	0.0100	n/a	n/a	0.1577
SETN(HL)	!CLK&D&RN&!SE&SI	0.0100	n/a	n/a	0.0444
SETN(HL)	!CLK&D&RN&SE&SI	0.0100	n/a	n/a	0.0444
SETN(HL)	CLK&D&RN&!SE&!SI	0.0100	n/a	n/a	0.0444
SETN(HL)	CLK&D&RN&SE&!SI	0.0100	n/a	n/a	0.0444
SETN(HL)	!CLK&!D&RN&!SE&!SI	0.0100	n/a	n/a	0.1577
SETN(HL)	CLK&D&RN&!SE&SI	0.0100	n/a	n/a	0.0444
SETN(HL)	CLK&D&RN&SE&SI	0.0100	n/a	n/a	0.0444
SETN(HL)	!CLK&!D&RN&SE&!SI	0.0100	n/a	n/a	0.1577
SETN(HL)	!CLK&!D&RN&!SE&SI	0.0100	n/a	n/a	0.1577
SETN(HL)	!CLK&!D&RN&SE&SI	0.0100	n/a	n/a	0.0444

continues on next page

Table 133 – continued from previous page

D(HL)	!CLK&!RN&!SE&!SETN&!SI	0.0100	n/a	n/a	0.2346
D(HL)	!CLK&!RN&!SE&!SETN&SI	0.0100	n/a	n/a	0.2346
D(HL)	!CLK&!RN&!SE&SETN&!SI	0.0100	n/a	n/a	0.3484
D(HL)	!CLK&!RN&!SE&SETN&SI	0.0100	n/a	n/a	0.3483
D(HL)	!CLK&!RN&SE&!SETN&!SI	0.0100	n/a	n/a	0.0203
D(HL)	!CLK&!RN&SE&!SETN&SI	0.0100	n/a	n/a	0.0100
D(HL)	!CLK&!RN&SE&SETN&!SI	0.0100	n/a	n/a	0.0203
D(HL)	!CLK&!RN&SE&SETN&SI	0.0100	n/a	n/a	0.0100
D(HL)	CLK&!RN&!SE&!SETN&!SI	0.0100	n/a	n/a	0.0247
D(HL)	CLK&!RN&!SE&!SETN&SI	0.0100	n/a	n/a	0.0246
D(HL)	CLK&!RN&!SE&SETN&!SI	0.0100	n/a	n/a	0.0247
D(HL)	CLK&!RN&!SE&SETN&SI	0.0100	n/a	n/a	0.0246
D(HL)	CLK&!RN&SE&!SETN&!SI	0.0100	n/a	n/a	0.0236
D(HL)	CLK&!RN&SE&!SETN&SI	0.0100	n/a	n/a	0.0095
D(HL)	CLK&!RN&SE&SETN&!SI	0.0100	n/a	n/a	0.0236
D(HL)	CLK&!RN&SE&SETN&SI	0.0100	n/a	n/a	0.0095
D(HL)	!CLK&RN&!SE&SETN&!SI	0.0100	n/a	n/a	0.3381
D(HL)	!CLK&RN&SE&SETN&!SI	0.0100	n/a	n/a	0.0203
D(HL)	!CLK&RN&!SE&SETN&SI	0.0100	n/a	n/a	0.3381
D(HL)	!CLK&RN&SE&SETN&SI	0.0100	n/a	n/a	0.0100
D(HL)	CLK&RN&!SE&SETN&!SI	0.0100	n/a	n/a	0.0564
D(HL)	CLK&RN&SE&SETN&!SI	0.0100	n/a	n/a	0.0202
D(HL)	!CLK&RN&!SE&!SETN&!SI	0.0100	n/a	n/a	0.2346
D(HL)	!CLK&RN&!SE&!SETN&SI	0.0100	n/a	n/a	0.2346
D(HL)	!CLK&RN&SE&!SETN&!SI	0.0100	n/a	n/a	0.0203
D(HL)	!CLK&RN&SE&!SETN&SI	0.0100	n/a	n/a	0.0100
D(HL)	CLK&RN&!SE&!SETN&!SI	0.0100	n/a	n/a	0.0221
D(HL)	CLK&RN&!SE&!SETN&SI	0.0100	n/a	n/a	0.0221
D(HL)	CLK&RN&SE&!SETN&!SI	0.0100	n/a	n/a	0.0202
D(HL)	CLK&RN&SE&!SETN&SI	0.0100	n/a	n/a	0.0095
D(HL)	CLK&RN&!SE&SETN&SI	0.0100	n/a	n/a	0.0564
D(HL)	CLK&RN&SE&SETN&SI	0.0100	n/a	n/a	0.0091
SE(HL)	!CLK&!D&!RN&!SETN&!SI	0.0100	n/a	n/a	0.1305
SE(HL)	!CLK&!D&!RN&!SETN&SI	0.0100	n/a	n/a	0.3598
SE(HL)	!CLK&!D&!RN&SETN&!SI	0.0100	n/a	n/a	0.1305
SE(HL)	!CLK&!D&!RN&SETN&SI	0.0100	n/a	n/a	0.4733
SE(HL)	!CLK&D&!RN&!SETN&!SI	0.0100	n/a	n/a	0.2201
SE(HL)	!CLK&D&!RN&!SETN&SI	0.0100	n/a	n/a	0.1326
SE(HL)	!CLK&D&!RN&SETN&!SI	0.0100	n/a	n/a	0.3644
SE(HL)	!CLK&D&!RN&SETN&SI	0.0100	n/a	n/a	0.1326
SE(HL)	CLK&!D&!RN&!SETN&!SI	0.0100	n/a	n/a	0.1351
SE(HL)	CLK&!D&!RN&!SETN&SI	0.0100	n/a	n/a	0.1344
SE(HL)	CLK&!D&!RN&SETN&!SI	0.0100	n/a	n/a	0.1351
SE(HL)	CLK&!D&!RN&SETN&SI	0.0100	n/a	n/a	0.1344
SE(HL)	CLK&D&!RN&!SETN&!SI	0.0100	n/a	n/a	0.1342
SE(HL)	CLK&D&!RN&!SETN&SI	0.0100	n/a	n/a	0.1372
SE(HL)	CLK&D&!RN&SETN&!SI	0.0100	n/a	n/a	0.1342
SE(HL)	CLK&D&!RN&SETN&SI	0.0100	n/a	n/a	0.1372
SE(HL)	CLK&!D&RN&SETN&!SI	0.0100	n/a	n/a	0.1305
SE(HL)	CLK&!D&RN&SETN&SI	0.0100	n/a	n/a	0.1819
SE(HL)	!CLK&!D&RN&!SETN&!SI	0.0100	n/a	n/a	0.1305
SE(HL)	!CLK&!D&RN&!SETN&SI	0.0100	n/a	n/a	0.3598

continues on next page

Table 133 – continued from previous page

SE(HL)	!CLK&D&RN&!SETN&!SI	0.0100	n/a	n/a	0.2201
SE(HL)	!CLK&D&RN&!SETN&SI	0.0100	n/a	n/a	0.1326
SE(HL)	CLK&!D&RN&!SETN&!SI	0.0100	n/a	n/a	0.1303
SE(HL)	CLK&!D&RN&!SETN&SI	0.0100	n/a	n/a	0.1319
SE(HL)	CLK&D&RN&!SETN&!SI	0.0100	n/a	n/a	0.1342
SE(HL)	CLK&D&RN&!SETN&SI	0.0100	n/a	n/a	0.1388
SE(HL)	!CLK&D&RN&SETN&!SI	0.0100	n/a	n/a	0.3708
SE(HL)	!CLK&D&RN&SETN&SI	0.0100	n/a	n/a	0.1326
SE(HL)	CLK&D&RN&SETN&!SI	0.0100	n/a	n/a	0.1357
SE(HL)	CLK&D&RN&SETN&SI	0.0100	n/a	n/a	0.1325
SE(HL)	!CLK&!D&RN&SETN&!SI	0.0100	n/a	n/a	0.1305
SE(HL)	!CLK&!D&RN&SETN&SI	0.0100	n/a	n/a	0.4631
SE(LH)	!CLK&!D&!RN&!SETN&!SI	0.0100	n/a	n/a	0.0024
SE(LH)	!CLK&!D&!RN&!SETN&SI	0.0100	n/a	n/a	0.0880
SE(LH)	!CLK&!D&!RN&SETN&!SI	0.0100	n/a	n/a	0.0025
SE(LH)	!CLK&!D&!RN&SETN&SI	0.0100	n/a	n/a	0.2371
SE(LH)	!CLK&D&!RN&!SETN&!SI	0.0100	n/a	n/a	0.2435
SE(LH)	!CLK&D&!RN&!SETN&SI	0.0100	n/a	n/a	-0.0060
SE(LH)	!CLK&D&!RN&SETN&!SI	0.0100	n/a	n/a	0.3683
SE(LH)	!CLK&D&!RN&SETN&SI	0.0100	n/a	n/a	-0.0060
SE(LH)	CLK&!D&!RN&!SETN&!SI	0.0100	n/a	n/a	0.0012
SE(LH)	CLK&!D&!RN&!SETN&SI	0.0100	n/a	n/a	-0.0048
SE(LH)	CLK&!D&!RN&SETN&!SI	0.0100	n/a	n/a	0.0012
SE(LH)	CLK&!D&!RN&SETN&SI	0.0100	n/a	n/a	-0.0048
SE(LH)	CLK&D&!RN&!SETN&!SI	0.0100	n/a	n/a	0.0037
SE(LH)	CLK&D&!RN&!SETN&SI	0.0100	n/a	n/a	-0.0080
SE(LH)	CLK&D&!RN&SETN&!SI	0.0100	n/a	n/a	0.0037
SE(LH)	CLK&D&!RN&SETN&SI	0.0100	n/a	n/a	-0.0080
SE(LH)	CLK&!D&RN&SETN&!SI	0.0100	n/a	n/a	0.0013
SE(LH)	CLK&!D&RN&SETN&SI	0.0100	n/a	n/a	-0.0048
SE(LH)	!CLK&!D&RN&!SETN&!SI	0.0100	n/a	n/a	0.0024
SE(LH)	!CLK&!D&RN&!SETN&SI	0.0100	n/a	n/a	0.0880
SE(LH)	!CLK&D&RN&!SETN&!SI	0.0100	n/a	n/a	0.2435
SE(LH)	!CLK&D&RN&!SETN&SI	0.0100	n/a	n/a	-0.0060
SE(LH)	CLK&!D&RN&!SETN&!SI	0.0100	n/a	n/a	0.0012
SE(LH)	CLK&!D&RN&!SETN&SI	0.0100	n/a	n/a	-0.0048
SE(LH)	CLK&D&RN&!SETN&!SI	0.0100	n/a	n/a	0.0037
SE(LH)	CLK&D&RN&!SETN&SI	0.0100	n/a	n/a	-0.0080
SE(LH)	!CLK&D&RN&SETN&!SI	0.0100	n/a	n/a	0.3575
SE(LH)	!CLK&D&RN&SETN&SI	0.0100	n/a	n/a	-0.0060
SE(LH)	CLK&D&RN&SETN&!SI	0.0100	n/a	n/a	0.0397
SE(LH)	CLK&D&RN&SETN&SI	0.0100	n/a	n/a	-0.0077
SE(LH)	!CLK&!D&RN&SETN&!SI	0.0100	n/a	n/a	0.0024
SE(LH)	!CLK&!D&RN&SETN&SI	0.0100	n/a	n/a	0.2435
CLK(LH)	!D&!RN&!SE&!SETN&!SI	0.0100	n/a	n/a	0.2518
CLK(LH)	!D&!RN&!SE&!SETN&SI	0.0100	n/a	n/a	0.2518
CLK(LH)	!D&!RN&!SE&SETN&!SI	0.0100	n/a	n/a	0.2411
CLK(LH)	!D&!RN&!SE&SETN&SI	0.0100	n/a	n/a	0.2411
CLK(LH)	!D&!RN&SE&!SETN&!SI	0.0100	n/a	n/a	0.2518
CLK(LH)	!D&!RN&SE&!SETN&SI	0.0100	n/a	n/a	0.3558
CLK(LH)	!D&!RN&SE&SETN&!SI	0.0100	n/a	n/a	0.2412
CLK(LH)	!D&!RN&SE&SETN&SI	0.0100	n/a	n/a	0.5004

continues on next page

Table 133 – continued from previous page

CLK(LH)	D&!RN&!SE&!SETN&!SI	0.0100	n/a	n/a	0.3556
CLK(LH)	D&!RN&!SE&!SETN&SI	0.0100	n/a	n/a	0.3557
CLK(LH)	D&!RN&!SE&SETN&!SI	0.0100	n/a	n/a	0.5002
CLK(LH)	D&!RN&!SE&SETN&SI	0.0100	n/a	n/a	0.5002
CLK(LH)	D&!RN&SE&!SETN&!SI	0.0100	n/a	n/a	0.2518
CLK(LH)	D&!RN&SE&!SETN&SI	0.0100	n/a	n/a	0.3559
CLK(LH)	D&!RN&SE&SETN&!SI	0.0100	n/a	n/a	0.2412
CLK(LH)	D&!RN&SE&SETN&SI	0.0100	n/a	n/a	0.5005
CLK(LH)	!D&RN&!SE&SETN&!SI	0.0100	n/a	n/a	0.2411
CLK(LH)	!D&RN&SE&SETN&!SI	0.0100	n/a	n/a	0.2411
CLK(LH)	!D&RN&!SE&SETN&SI	0.0100	n/a	n/a	0.2411
CLK(LH)	!D&RN&SE&SETN&SI	0.0100	n/a	n/a	0.2565
CLK(LH)	D&RN&!SE&SETN&!SI	0.0100	n/a	n/a	0.2564
CLK(LH)	D&RN&SE&SETN&!SI	0.0100	n/a	n/a	0.2411
CLK(LH)	!D&RN&!SE&!SETN&!SI	0.0100	n/a	n/a	0.3174
CLK(LH)	!D&RN&!SE&!SETN&SI	0.0100	n/a	n/a	0.3174
CLK(LH)	!D&RN&SE&!SETN&!SI	0.0100	n/a	n/a	0.3175
CLK(LH)	!D&RN&SE&!SETN&SI	0.0100	n/a	n/a	0.2565
CLK(LH)	D&RN&!SE&!SETN&!SI	0.0100	n/a	n/a	0.2565
CLK(LH)	D&RN&!SE&!SETN&SI	0.0100	n/a	n/a	0.2565
CLK(LH)	D&RN&SE&!SETN&!SI	0.0100	n/a	n/a	0.3173
CLK(LH)	D&RN&SE&!SETN&SI	0.0100	n/a	n/a	0.2565
CLK(LH)	D&RN&!SE&SETN&SI	0.0100	n/a	n/a	0.2564
CLK(LH)	D&RN&SE&SETN&SI	0.0100	n/a	n/a	0.2565
SI(LH)	!CLK&!D&!RN&!SE&!SETN	0.0100	n/a	n/a	-0.0198
SI(LH)	!CLK&!D&!RN&!SE&SETN	0.0100	n/a	n/a	-0.0198
SI(LH)	!CLK&!D&!RN&SE&!SETN	0.0100	n/a	n/a	0.0860
SI(LH)	!CLK&!D&!RN&SE&SETN	0.0100	n/a	n/a	0.2361
SI(LH)	!CLK&D&!RN&!SE&!SETN	0.0100	n/a	n/a	-0.0183
SI(LH)	!CLK&D&!RN&!SE&SETN	0.0100	n/a	n/a	-0.0183
SI(LH)	!CLK&D&!RN&SE&!SETN	0.0100	n/a	n/a	0.0756
SI(LH)	!CLK&D&!RN&SE&SETN	0.0100	n/a	n/a	0.2235
SI(LH)	CLK&!D&!RN&!SE&!SETN	0.0100	n/a	n/a	-0.0198
SI(LH)	CLK&!D&!RN&!SE&SETN	0.0100	n/a	n/a	-0.0198
SI(LH)	CLK&!D&!RN&SE&!SETN	0.0100	n/a	n/a	-0.0158
SI(LH)	CLK&!D&!RN&SE&SETN	0.0100	n/a	n/a	-0.0158
SI(LH)	CLK&D&!RN&!SE&!SETN	0.0100	n/a	n/a	-0.0188
SI(LH)	CLK&D&!RN&!SE&SETN	0.0100	n/a	n/a	-0.0188
SI(LH)	CLK&D&!RN&SE&!SETN	0.0100	n/a	n/a	-0.0157
SI(LH)	CLK&D&!RN&SE&SETN	0.0100	n/a	n/a	-0.0157
SI(LH)	CLK&!D&RN&!SE&SETN	0.0100	n/a	n/a	-0.0198
SI(LH)	CLK&!D&RN&SE&SETN	0.0100	n/a	n/a	-0.0158
SI(LH)	!CLK&D&RN&!SE&SETN	0.0100	n/a	n/a	-0.0183
SI(LH)	!CLK&D&RN&SE&SETN	0.0100	n/a	n/a	0.2298
SI(LH)	!CLK&!D&RN&!SE&!SETN	0.0100	n/a	n/a	-0.0198
SI(LH)	!CLK&!D&RN&SE&!SETN	0.0100	n/a	n/a	0.0860
SI(LH)	!CLK&D&RN&!SE&!SETN	0.0100	n/a	n/a	-0.0183
SI(LH)	!CLK&D&RN&SE&!SETN	0.0100	n/a	n/a	0.0755
SI(LH)	CLK&!D&RN&!SE&!SETN	0.0100	n/a	n/a	-0.0198
SI(LH)	CLK&!D&RN&SE&!SETN	0.0100	n/a	n/a	-0.0158
SI(LH)	CLK&D&RN&!SE&!SETN	0.0100	n/a	n/a	-0.0188
SI(LH)	CLK&D&RN&SE&!SETN	0.0100	n/a	n/a	-0.0158

continues on next page

Table 133 – continued from previous page

SI(LH)	CLK&D&RN&!SE&SETN	0.0100	n/a	n/a	-0.0184
SI(LH)	CLK&D&RN&SE&SETN	0.0100	n/a	n/a	-0.0158
SI(LH)	!CLK&!D&RN&!SE&SETN	0.0100	n/a	n/a	-0.0198
SI(LH)	!CLK&!D&RN&SE&SETN	0.0100	n/a	n/a	0.2424
CLK(HL)	!D&!RN&!SE&!SETN&!SI	0.0100	n/a	n/a	0.3777
CLK(HL)	!D&!RN&!SE&!SETN&SI	0.0100	n/a	n/a	0.3777
CLK(HL)	!D&!RN&!SE&SETN&!SI	0.0100	n/a	n/a	0.3734
CLK(HL)	!D&!RN&!SE&SETN&SI	0.0100	n/a	n/a	0.3734
CLK(HL)	!D&!RN&SE&!SETN&!SI	0.0100	n/a	n/a	0.3957
CLK(HL)	!D&!RN&SE&!SETN&SI	0.0100	n/a	n/a	0.4105
CLK(HL)	!D&!RN&SE&SETN&!SI	0.0100	n/a	n/a	0.3925
CLK(HL)	!D&!RN&SE&SETN&SI	0.0100	n/a	n/a	0.5599
CLK(HL)	D&!RN&!SE&!SETN&!SI	0.0100	n/a	n/a	0.3910
CLK(HL)	D&!RN&!SE&!SETN&SI	0.0100	n/a	n/a	0.3910
CLK(HL)	D&!RN&!SE&SETN&!SI	0.0100	n/a	n/a	0.5320
CLK(HL)	D&!RN&!SE&SETN&SI	0.0100	n/a	n/a	0.5320
CLK(HL)	D&!RN&SE&!SETN&!SI	0.0100	n/a	n/a	0.4139
CLK(HL)	D&!RN&SE&!SETN&SI	0.0100	n/a	n/a	0.4002
CLK(HL)	D&!RN&SE&SETN&!SI	0.0100	n/a	n/a	0.4146
CLK(HL)	D&!RN&SE&SETN&SI	0.0100	n/a	n/a	0.5459
CLK(HL)	!D&RN&!SE&SETN&!SI	0.0100	n/a	n/a	0.3139
CLK(HL)	!D&RN&SE&SETN&!SI	0.0100	n/a	n/a	0.3139
CLK(HL)	!D&RN&!SE&SETN&SI	0.0100	n/a	n/a	0.3139
CLK(HL)	!D&RN&SE&SETN&SI	0.0100	n/a	n/a	0.3136
CLK(HL)	D&RN&!SE&SETN&!SI	0.0100	n/a	n/a	0.3136
CLK(HL)	D&RN&SE&SETN&!SI	0.0100	n/a	n/a	0.3140
CLK(HL)	!D&RN&!SE&!SETN&!SI	0.0100	n/a	n/a	0.4872
CLK(HL)	!D&RN&!SE&!SETN&SI	0.0100	n/a	n/a	0.4871
CLK(HL)	!D&RN&SE&!SETN&!SI	0.0100	n/a	n/a	0.5049
CLK(HL)	!D&RN&SE&!SETN&SI	0.0100	n/a	n/a	0.3541
CLK(HL)	D&RN&!SE&!SETN&!SI	0.0100	n/a	n/a	0.3347
CLK(HL)	D&RN&!SE&!SETN&SI	0.0100	n/a	n/a	0.3346
CLK(HL)	D&RN&SE&!SETN&!SI	0.0100	n/a	n/a	0.5224
CLK(HL)	D&RN&SE&!SETN&SI	0.0100	n/a	n/a	0.3437
CLK(HL)	D&RN&!SE&SETN&SI	0.0100	n/a	n/a	0.3136
CLK(HL)	D&RN&SE&SETN&SI	0.0100	n/a	n/a	0.3136
SI(HL)	!CLK&!D&!RN&!SE&!SETN	0.0100	n/a	n/a	0.0203
SI(HL)	!CLK&!D&!RN&!SE&SETN	0.0100	n/a	n/a	0.0203
SI(HL)	!CLK&!D&!RN&SE&!SETN	0.0100	n/a	n/a	0.2804
SI(HL)	!CLK&!D&!RN&SE&SETN	0.0100	n/a	n/a	0.4015
SI(HL)	!CLK&D&!RN&!SE&!SETN	0.0100	n/a	n/a	0.0202
SI(HL)	!CLK&D&!RN&!SE&SETN	0.0100	n/a	n/a	0.0202
SI(HL)	!CLK&D&!RN&SE&!SETN	0.0100	n/a	n/a	0.2839
SI(HL)	!CLK&D&!RN&SE&SETN	0.0100	n/a	n/a	0.4087
SI(HL)	CLK&!D&!RN&!SE&!SETN	0.0100	n/a	n/a	0.0202
SI(HL)	CLK&!D&!RN&!SE&SETN	0.0100	n/a	n/a	0.0202
SI(HL)	CLK&!D&!RN&SE&!SETN	0.0100	n/a	n/a	0.0218
SI(HL)	CLK&!D&!RN&SE&SETN	0.0100	n/a	n/a	0.0218
SI(HL)	CLK&D&!RN&!SE&!SETN	0.0100	n/a	n/a	0.0202
SI(HL)	CLK&D&!RN&!SE&SETN	0.0100	n/a	n/a	0.0202
SI(HL)	CLK&D&!RN&SE&!SETN	0.0100	n/a	n/a	0.0219
SI(HL)	CLK&D&!RN&SE&SETN	0.0100	n/a	n/a	0.0219

continues on next page

Table 133 – continued from previous page

SI(HL)	CLK&!D&RN&!SE&SETN	0.0100	n/a	n/a	0.0202
SI(HL)	CLK&!D&RN&SE&SETN	0.0100	n/a	n/a	0.0874
SI(HL)	!CLK&D&RN&!SE&SETN	0.0100	n/a	n/a	0.0202
SI(HL)	!CLK&D&RN&SE&SETN	0.0100	n/a	n/a	0.3980
SI(HL)	!CLK&!D&RN&!SE&!SETN	0.0100	n/a	n/a	0.0203
SI(HL)	!CLK&!D&RN&SE&!SETN	0.0100	n/a	n/a	0.2804
SI(HL)	!CLK&D&RN&!SE&!SETN	0.0100	n/a	n/a	0.0202
SI(HL)	!CLK&D&RN&SE&!SETN	0.0100	n/a	n/a	0.2839
SI(HL)	CLK&!D&RN&!SE&!SETN	0.0100	n/a	n/a	0.0202
SI(HL)	CLK&!D&RN&SE&!SETN	0.0100	n/a	n/a	0.0217
SI(HL)	CLK&D&RN&!SE&!SETN	0.0100	n/a	n/a	0.0202
SI(HL)	CLK&D&RN&SE&!SETN	0.0100	n/a	n/a	0.0218
SI(HL)	CLK&D&RN&!SE&SETN	0.0100	n/a	n/a	0.0202
SI(HL)	CLK&D&RN&SE&SETN	0.0100	n/a	n/a	0.0727
SI(HL)	!CLK&!D&RN&!SE&SETN	0.0100	n/a	n/a	0.0203
SI(HL)	!CLK&!D&RN&SE&SETN	0.0100	n/a	n/a	0.3909
D(LH)	!CLK&!RN&!SE&!SETN&!SI	0.0100	n/a	n/a	0.0688
D(LH)	!CLK&!RN&!SE&!SETN&SI	0.0100	n/a	n/a	0.0688
D(LH)	!CLK&!RN&!SE&SETN&!SI	0.0100	n/a	n/a	0.2130
D(LH)	!CLK&!RN&!SE&SETN&SI	0.0100	n/a	n/a	0.2130
D(LH)	!CLK&!RN&SE&!SETN&!SI	0.0100	n/a	n/a	-0.0186
D(LH)	!CLK&!RN&SE&!SETN&SI	0.0100	n/a	n/a	-0.0064
D(LH)	!CLK&!RN&SE&SETN&!SI	0.0100	n/a	n/a	-0.0186
D(LH)	!CLK&!RN&SE&SETN&SI	0.0100	n/a	n/a	-0.0064
D(LH)	CLK&!RN&!SE&!SETN&!SI	0.0100	n/a	n/a	-0.0155
D(LH)	CLK&!RN&!SE&!SETN&SI	0.0100	n/a	n/a	-0.0154
D(LH)	CLK&!RN&!SE&SETN&!SI	0.0100	n/a	n/a	-0.0155
D(LH)	CLK&!RN&!SE&SETN&SI	0.0100	n/a	n/a	-0.0154
D(LH)	CLK&!RN&SE&!SETN&!SI	0.0100	n/a	n/a	-0.0197
D(LH)	CLK&!RN&SE&!SETN&SI	0.0100	n/a	n/a	-0.0122
D(LH)	CLK&!RN&SE&SETN&!SI	0.0100	n/a	n/a	-0.0197
D(LH)	CLK&!RN&SE&SETN&SI	0.0100	n/a	n/a	-0.0122
D(LH)	!CLK&RN&!SE&SETN&!SI	0.0100	n/a	n/a	0.2194
D(LH)	!CLK&RN&SE&SETN&!SI	0.0100	n/a	n/a	-0.0186
D(LH)	!CLK&RN&!SE&SETN&SI	0.0100	n/a	n/a	0.2194
D(LH)	!CLK&RN&SE&SETN&SI	0.0100	n/a	n/a	-0.0064
D(LH)	CLK&RN&!SE&SETN&!SI	0.0100	n/a	n/a	-0.0155
D(LH)	CLK&RN&SE&SETN&!SI	0.0100	n/a	n/a	-0.0197
D(LH)	!CLK&RN&!SE&!SETN&!SI	0.0100	n/a	n/a	0.0688
D(LH)	!CLK&RN&!SE&!SETN&SI	0.0100	n/a	n/a	0.0688
D(LH)	!CLK&RN&SE&!SETN&!SI	0.0100	n/a	n/a	-0.0186
D(LH)	!CLK&RN&SE&!SETN&SI	0.0100	n/a	n/a	-0.0064
D(LH)	CLK&RN&!SE&!SETN&!SI	0.0100	n/a	n/a	-0.0149
D(LH)	CLK&RN&!SE&!SETN&SI	0.0100	n/a	n/a	-0.0149
D(LH)	CLK&RN&SE&!SETN&!SI	0.0100	n/a	n/a	-0.0197
D(LH)	CLK&RN&SE&!SETN&SI	0.0100	n/a	n/a	-0.0125
D(LH)	CLK&RN&!SE&SETN&SI	0.0100	n/a	n/a	-0.0154
D(LH)	CLK&RN&SE&SETN&SI	0.0100	n/a	n/a	-0.0066
RN(HL)	!CLK&!D&!SE&SETN&!SI	0.0100	n/a	n/a	0.0517
RN(HL)	!CLK&D&SE&SETN&!SI	0.0100	n/a	n/a	0.0517
RN(HL)	!CLK&D&!SE&SETN&SI	0.0100	n/a	n/a	0.0501
RN(HL)	!CLK&D&SE&SETN&SI	0.0100	n/a	n/a	0.0502

continues on next page

Table 133 – continued from previous page

RN(HL)	CLK&D&!SE&SETN&!SI	0.0100	n/a	n/a	0.0529
RN(HL)	CLK&D&SE&SETN&!SI	0.0100	n/a	n/a	0.0530
RN(HL)	CLK&D&!SE&SETN&SI	0.0100	n/a	n/a	0.0529
RN(HL)	CLK&D&SE&SETN&SI	0.0100	n/a	n/a	0.0529
RN(HL)	!CLK&!D&SE&SETN&!SI	0.0100	n/a	n/a	0.0517
RN(HL)	!CLK&!D&!SE&SETN&SI	0.0100	n/a	n/a	0.0517
RN(HL)	!CLK&!D&SE&SETN&SI	0.0100	n/a	n/a	0.0502
RN(HL)	CLK&!D&!SE&SETN&!SI	0.0100	n/a	n/a	0.0530
RN(HL)	CLK&!D&SE&SETN&!SI	0.0100	n/a	n/a	0.0530
RN(HL)	CLK&!D&!SE&SETN&SI	0.0100	n/a	n/a	0.0530
RN(HL)	CLK&!D&SE&SETN&SI	0.0100	n/a	n/a	0.0529
RN(HL)	!CLK&D&!SE&SETN&!SI	0.0100	n/a	n/a	0.0501
RN(LH)	!CLK&!D&!SE&SETN&!SI	0.0100	n/a	n/a	-0.0495
RN(LH)	!CLK&!D&!SE&SETN&SI	0.0100	n/a	n/a	-0.0495
RN(LH)	!CLK&!D&SE&SETN&!SI	0.0100	n/a	n/a	-0.0495
RN(LH)	!CLK&!D&SE&SETN&SI	0.0100	n/a	n/a	-0.0459
RN(LH)	!CLK&D&!SE&SETN&!SI	0.0100	n/a	n/a	-0.0459
RN(LH)	!CLK&D&!SE&SETN&SI	0.0100	n/a	n/a	-0.0459
RN(LH)	!CLK&D&SE&SETN&!SI	0.0100	n/a	n/a	-0.0495
RN(LH)	!CLK&D&SE&SETN&SI	0.0100	n/a	n/a	-0.0459
RN(LH)	CLK&!D&!SE&SETN&!SI	0.0100	n/a	n/a	-0.0495
RN(LH)	CLK&!D&!SE&SETN&SI	0.0100	n/a	n/a	-0.0495
RN(LH)	CLK&!D&SE&SETN&!SI	0.0100	n/a	n/a	-0.0494
RN(LH)	CLK&!D&SE&SETN&SI	0.0100	n/a	n/a	-0.0494
RN(LH)	CLK&D&!SE&SETN&!SI	0.0100	n/a	n/a	-0.0495
RN(LH)	CLK&D&!SE&SETN&SI	0.0100	n/a	n/a	-0.0495
RN(LH)	CLK&D&SE&SETN&!SI	0.0100	n/a	n/a	-0.0494
RN(LH)	CLK&D&SE&SETN&SI	0.0100	n/a	n/a	-0.0494
SETN(LH)	!CLK&!D&!RN&!SE&!SI	0.0100	n/a	n/a	0.1318
SETN(LH)	!CLK&!D&!RN&!SE&SI	0.0100	n/a	n/a	0.1318
SETN(LH)	!CLK&!D&!RN&SE&!SI	0.0100	n/a	n/a	0.1318
SETN(LH)	!CLK&!D&!RN&SE&SI	0.0100	n/a	n/a	0.0676
SETN(LH)	!CLK&D&!RN&!SE&!SI	0.0100	n/a	n/a	0.0676
SETN(LH)	!CLK&D&!RN&!SE&SI	0.0100	n/a	n/a	0.0676
SETN(LH)	!CLK&D&!RN&SE&!SI	0.0100	n/a	n/a	0.1318
SETN(LH)	!CLK&D&!RN&SE&SI	0.0100	n/a	n/a	0.0676
SETN(LH)	CLK&!D&!RN&!SE&!SI	0.0100	n/a	n/a	0.1254
SETN(LH)	CLK&!D&!RN&!SE&SI	0.0100	n/a	n/a	0.1254
SETN(LH)	CLK&!D&!RN&SE&!SI	0.0100	n/a	n/a	0.1254
SETN(LH)	CLK&!D&!RN&SE&SI	0.0100	n/a	n/a	0.1254
SETN(LH)	CLK&D&!RN&!SE&!SI	0.0100	n/a	n/a	0.1254
SETN(LH)	CLK&D&!RN&!SE&SI	0.0100	n/a	n/a	0.1254
SETN(LH)	CLK&D&!RN&SE&!SI	0.0100	n/a	n/a	0.1254
SETN(LH)	CLK&D&!RN&SE&SI	0.0100	n/a	n/a	0.1254
SETN(LH)	!CLK&!D&RN&!SE&!SI	0.0100	n/a	n/a	0.0253
SETN(LH)	!CLK&!D&RN&!SE&SI	0.0100	n/a	n/a	0.0253
SETN(LH)	!CLK&!D&RN&SE&!SI	0.0100	n/a	n/a	0.0253
SETN(LH)	!CLK&!D&RN&SE&SI	0.0100	n/a	n/a	-0.0307
SETN(LH)	!CLK&D&RN&!SE&!SI	0.0100	n/a	n/a	-0.0307
SETN(LH)	!CLK&D&RN&!SE&SI	0.0100	n/a	n/a	-0.0307
SETN(LH)	!CLK&D&RN&SE&!SI	0.0100	n/a	n/a	0.0253
SETN(LH)	!CLK&D&RN&SE&SI	0.0100	n/a	n/a	-0.0307

continues on next page

Table 133 – continued from previous page

SETN(LH)	CLK&!D&RN&!SE&!SI	0.0100	n/a	n/a	-0.0307
SETN(LH)	CLK&!D&RN&!SE&SI	0.0100	n/a	n/a	-0.0307
SETN(LH)	CLK&!D&RN&SE&!SI	0.0100	n/a	n/a	-0.0307
SETN(LH)	CLK&!D&RN&SE&SI	0.0100	n/a	n/a	-0.0307
SETN(LH)	CLK&D&RN&!SE&!SI	0.0100	n/a	n/a	-0.0307
SETN(LH)	CLK&D&RN&!SE&SI	0.0100	n/a	n/a	-0.0307
SETN(LH)	CLK&D&RN&SE&!SI	0.0100	n/a	n/a	-0.0307
SETN(LH)	CLK&D&RN&SE&SI	0.0100	n/a	n/a	-0.0307

LEAKAGE POWER

When Condition	Power (nW)
!CLK&!D&!RN&!SE&!SETN&!SI	0.4924
!CLK&!D&!RN&!SE&!SETN&SI	0.4947
!CLK&!D&!RN&!SE&SETN&!SI	0.5017
!CLK&!D&!RN&!SE&SETN&SI	0.5038
!CLK&!D&!RN&SE&!SETN&!SI	0.5309
!CLK&!D&!RN&SE&!SETN&SI	0.5531
!CLK&!D&!RN&SE&SETN&!SI	0.5403
!CLK&!D&!RN&SE&SETN&SI	0.5816
!CLK&D&!RN&!SE&!SETN&!SI	0.4834
!CLK&D&!RN&!SE&!SETN&SI	0.4834
!CLK&D&!RN&!SE&SETN&!SI	0.5120
!CLK&D&!RN&!SE&SETN&SI	0.5120
!CLK&D&!RN&SE&!SETN&!SI	0.5723
!CLK&D&!RN&SE&!SETN&SI	0.5176
!CLK&D&!RN&SE&SETN&!SI	0.5817
!CLK&D&!RN&SE&SETN&SI	0.5461
CLK&!D&!RN&!SE&!SETN&!SI	0.5122
CLK&!D&!RN&!SE&!SETN&SI	0.5123
CLK&!D&!RN&!SE&SETN&!SI	0.4804
CLK&!D&!RN&!SE&SETN&SI	0.4804
CLK&!D&!RN&SE&!SETN&!SI	0.5109
CLK&!D&!RN&SE&!SETN&SI	0.5140
CLK&!D&!RN&SE&SETN&!SI	0.4791
CLK&!D&!RN&SE&SETN&SI	0.4822
CLK&D&!RN&!SE&!SETN&!SI	0.5154
CLK&D&!RN&!SE&!SETN&SI	0.5154
CLK&D&!RN&!SE&SETN&!SI	0.4836
CLK&D&!RN&!SE&SETN&SI	0.4836
CLK&D&!RN&SE&!SETN&!SI	0.5110
CLK&D&!RN&SE&!SETN&SI	0.5140
CLK&D&!RN&SE&SETN&!SI	0.4793
CLK&D&!RN&SE&SETN&SI	0.4822
!CLK&!D&RN&!SE&SETN&!SI	0.6445
!CLK&!D&RN&!SE&SETN&SI	0.6460
!CLK&!D&RN&SE&SETN&!SI	0.6830

continues on next page

Table 134 – continued from previous page

!CLK&!D&RN&SE&SETN&SI	0.6827
!CLK&D&RN&!SE&SETN&!SI	0.6131
!CLK&D&RN&!SE&SETN&SI	0.6131
!CLK&D&RN&SE&SETN&!SI	0.7244
!CLK&D&RN&SE&SETN&SI	0.6472
CLK&!D&RN&!SE&SETN&!SI	0.5047
CLK&!D&RN&!SE&SETN&SI	0.5047
CLK&!D&RN&SE&SETN&!SI	0.5032
CLK&D&RN&SE&SETN&!SI	0.5032
!CLK&!D&RN&!SE&!SETN&!SI	0.4764
!CLK&!D&RN&!SE&!SETN&SI	0.4779
!CLK&!D&RN&SE&!SETN&!SI	0.5149
!CLK&!D&RN&SE&!SETN&SI	0.5353
!CLK&D&RN&!SE&!SETN&!SI	0.4657
!CLK&D&RN&!SE&!SETN&SI	0.4657
!CLK&D&RN&SE&!SETN&!SI	0.5563
!CLK&D&RN&SE&!SETN&SI	0.4998
CLK&!D&RN&!SE&!SETN&!SI	0.4659
CLK&!D&RN&!SE&!SETN&SI	0.4659
CLK&!D&RN&SE&!SETN&!SI	0.4645
CLK&!D&RN&SE&!SETN&SI	0.4659
CLK&D&RN&!SE&!SETN&!SI	0.4674
CLK&D&RN&!SE&!SETN&SI	0.4674
CLK&D&RN&SE&!SETN&!SI	0.4645
CLK&D&RN&SE&!SETN&SI	0.4660
CLK&!D&RN&SE&SETN&SI	0.7571
CLK&D&RN&!SE&SETN&!SI	0.7200
CLK&D&RN&!SE&SETN&SI	0.7200
CLK&D&RN&SE&SETN&SI	0.7389

gf180mcu_fd_sc_mcu7t5v0__sdffrsnq_2

gf180mcu_fd_sc_mcu7t5v0__sdffrsnq_2 symbol

SDFFRSNQ_X2_7T5P0

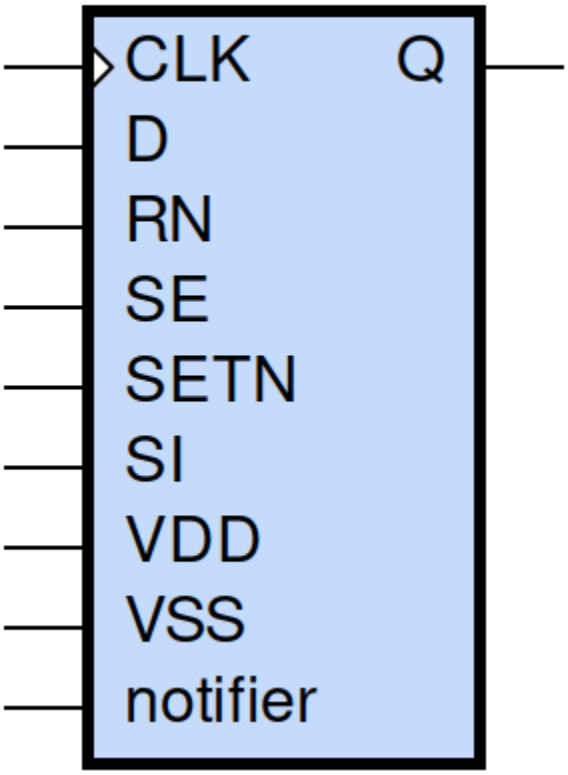

gf180mcu_fd_sc_mcu7t5v0__sdffrsnq_2 schematic

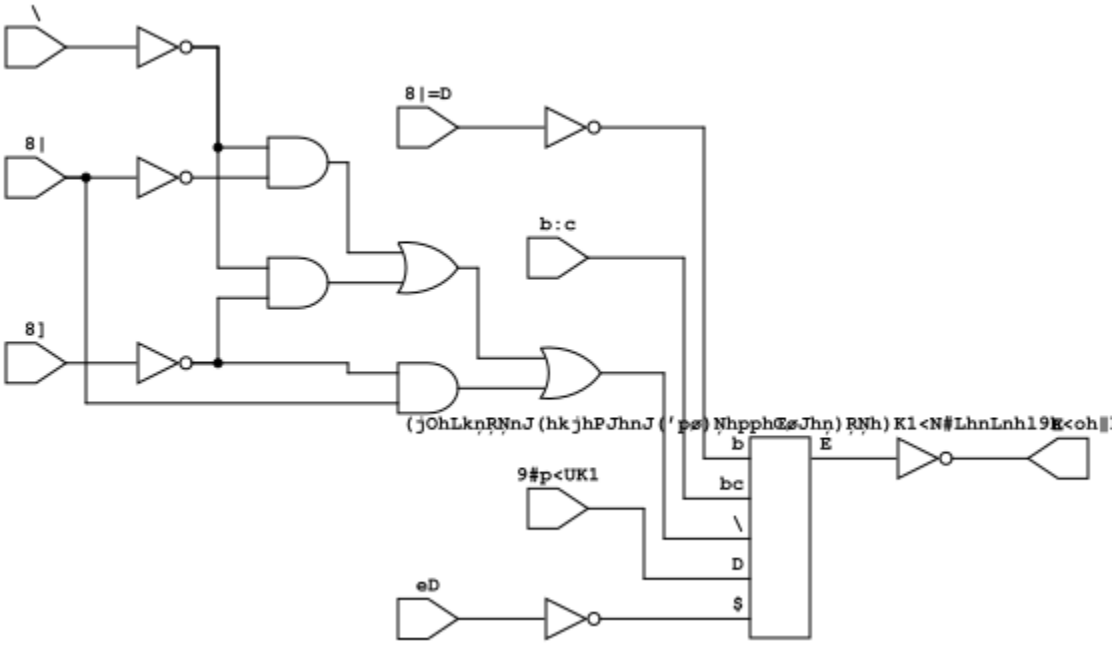

gf180mcu_fd_sc_mcu7t5v0__sdffrsnq_2 layout

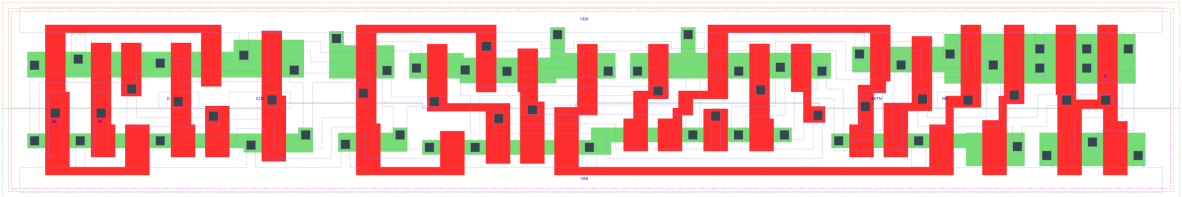

SDFFRSNQ_X2 is a positive edge triggered scan D-type flip flop, active low set/reset, 2X drive strength

Attributes

Attribute	Value
area	109.760000 μm^2

TRUTH TABLE

Input						Output
RN	SETN	SE	SI	D	CLK	Q
H	H	L	X	L	↑	L
H	H	L	X	H	↑	H
H	H	H	L	X	↑	L
H	H	H	H	X	↑	H
H	L	X	X	X	X	H
L	H	X	X	X	X	L
L	L	X	X	X	X	L

FUNCTIONAL SCHEMATIC

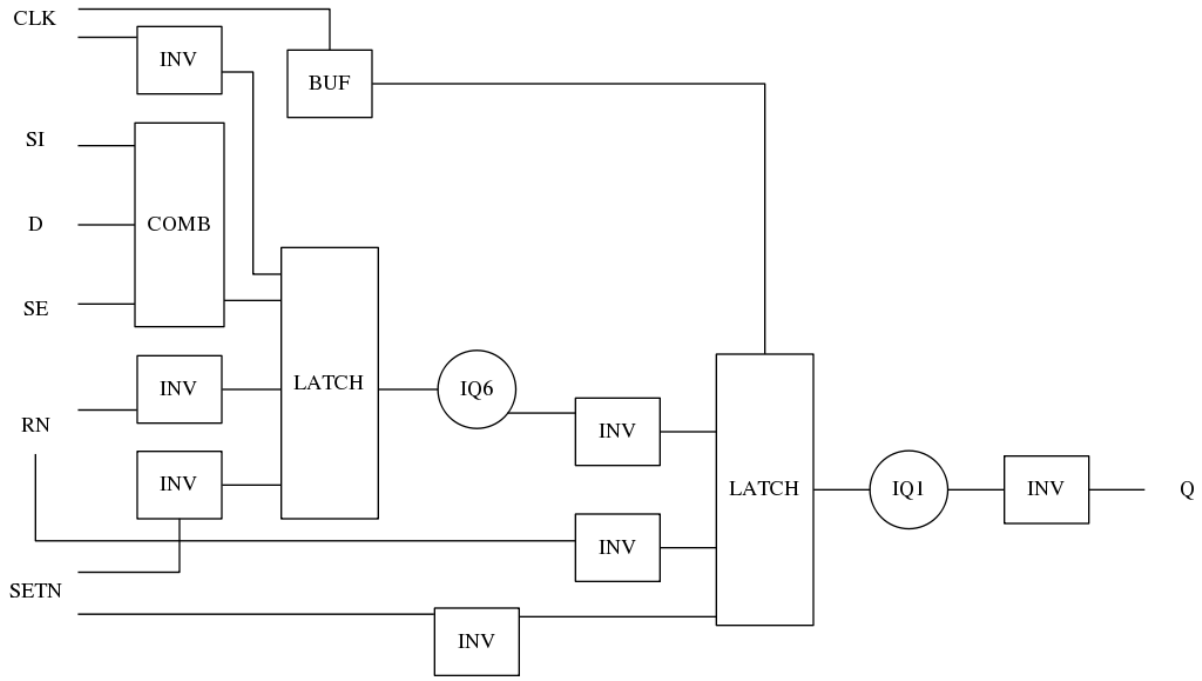

CONSTRAINTS

Constraint Pin	Related Pin	setup(ns)	hold(ns)
SE(LH)	CLK(LH)	0.6070	-0.2350
SE(LH)	CLK(LH)	0.8130	-0.0800
SE(HL)	CLK(LH)	0.6930	-0.0400
SE(HL)	CLK(LH)	0.6870	-0.3440
SI(HL)	CLK(LH)	0.7730	-0.0740
SI(HL)	CLK(LH)	0.7790	-0.0400
SI(LH)	CLK(LH)	0.6530	-0.2810
SI(LH)	CLK(LH)	0.6410	-0.2750
D(HL)	CLK(LH)	0.6810	-0.0290
D(HL)	CLK(LH)	0.6810	-0.0290
D(LH)	CLK(LH)	0.5780	-0.2290
D(LH)	CLK(LH)	0.5720	-0.2290
SETN(LH)	RN(LH)	-0.0110	0.1030
SETN(LH)	RN(LH)	-0.0110	0.1030
SETN(LH)	RN(LH)	-0.0110	0.1030
SETN(LH)	RN(LH)	-0.0110	0.1030
SETN(LH)	RN(LH)	-0.0340	0.1090
SETN(LH)	RN(LH)	-0.0340	0.1090
SETN(LH)	RN(LH)	-0.0340	0.1090
SETN(LH)	RN(LH)	-0.0340	0.1090
SETN(LH)	RN(LH)	-0.0110	0.1030
SETN(LH)	RN(LH)	-0.0110	0.1030
SETN(LH)	RN(LH)	-0.0110	0.1030
SETN(LH)	RN(LH)	-0.0340	0.1090

continues on next page

Table 135 – continued from previous page

SETN(LH)	RN(LH)	-0.0340	0.1090
SETN(LH)	RN(LH)	-0.0340	0.1090
SETN(LH)	RN(LH)	-0.0340	0.1090
SETN(LH)	RN(LH)	-0.0110	0.1030
RN(LH)	SETN(LH)	0.1030	-0.0110
RN(LH)	SETN(LH)	0.1030	-0.0110
RN(LH)	SETN(LH)	0.1030	-0.0110
RN(LH)	SETN(LH)	0.1030	-0.0110
RN(LH)	SETN(LH)	0.1090	-0.0340
RN(LH)	SETN(LH)	0.1090	-0.0340
RN(LH)	SETN(LH)	0.1090	-0.0340
RN(LH)	SETN(LH)	0.1090	-0.0340
RN(LH)	SETN(LH)	0.1030	-0.0110
RN(LH)	SETN(LH)	0.1030	-0.0110
RN(LH)	SETN(LH)	0.1030	-0.0110
RN(LH)	SETN(LH)	0.1090	-0.0340
RN(LH)	SETN(LH)	0.1090	-0.0340
RN(LH)	SETN(LH)	0.1090	-0.0340
RN(LH)	SETN(LH)	0.1090	-0.0340
RN(LH)	SETN(LH)	0.1030	-0.0110

Constraint Pin	Related Pin	recovery(ns)	removal(ns)
SETN(LH)	CLK(LH)	0.0000	0.2860
SETN(LH)	CLK(LH)	0.0000	0.2860
SETN(LH)	CLK(LH)	0.0000	0.2860
SETN(LH)	CLK(LH)	0.0000	0.2860
RN(LH)	CLK(LH)	-0.2460	0.4120
RN(LH)	CLK(LH)	-0.2460	0.4060
RN(LH)	CLK(LH)	-0.2400	0.4060
RN(LH)	CLK(LH)	-0.2400	0.4120

Constraint Pin	Related Pin	Minimum Pulse Width(ns)
CLK(HLH)	CLK(HL)	0.8330
CLK(HLH)	CLK(HL)	0.8520
CLK(HLH)	CLK(HL)	0.8330
CLK(HLH)	CLK(HL)	0.7170
CLK(HLH)	CLK(HL)	0.6440
CLK(HLH)	CLK(HL)	0.9190
CLK(HLH)	CLK(HL)	0.6440
CLK(HLH)	CLK(HL)	0.6810
CLK(LHL)	CLK(LH)	0.5050

continues on next page

Table 136 – continued from previous page

CLK(LHL)	CLK(LH)	0.5050
CLK(LHL)	CLK(LH)	0.5050
CLK(LHL)	CLK(LH)	0.5640
CLK(LHL)	CLK(LH)	0.5640
CLK(LHL)	CLK(LH)	0.5050
CLK(LHL)	CLK(LH)	0.5640
CLK(LHL)	CLK(LH)	0.5640
SETN(HLH)	SETN(HL)	0.5050
SETN(HLH)	SETN(HL)	0.5050
SETN(HLH)	SETN(HL)	0.5050
SETN(HLH)	SETN(HL)	0.5050
SETN(HLH)	SETN(HL)	0.5050
SETN(HLH)	SETN(HL)	0.5050
SETN(HLH)	SETN(HL)	0.5050
SETN(HLH)	SETN(HL)	0.5050
SETN(HLH)	SETN(HL)	0.5050
SETN(HLH)	SETN(HL)	0.5050
SETN(HLH)	SETN(HL)	0.5050
SETN(HLH)	SETN(HL)	0.5050
SETN(HLH)	SETN(HL)	0.5050
SETN(HLH)	SETN(HL)	0.5050
SETN(HLH)	SETN(HL)	0.5050
SETN(HLH)	SETN(HL)	0.5050
RN(HLH)	RN(HL)	0.2900
RN(HLH)	RN(HL)	0.2900
RN(HLH)	RN(HL)	0.2900
RN(HLH)	RN(HL)	0.2900
RN(HLH)	RN(HL)	0.4760
RN(HLH)	RN(HL)	0.4760
RN(HLH)	RN(HL)	0.4760
RN(HLH)	RN(HL)	0.4760
RN(HLH)	RN(HL)	0.2900
RN(HLH)	RN(HL)	0.2900
RN(HLH)	RN(HL)	0.2900
RN(HLH)	RN(HL)	0.4760
RN(HLH)	RN(HL)	0.4760
RN(HLH)	RN(HL)	0.4760
RN(HLH)	RN(HL)	0.4760
RN(HLH)	RN(HL)	0.2900

PIN CAPACITANCE (pf)

Pin	Type	Capacitance (pf)
SE	input	0.0061
SI	input	0.0027
D	input	0.0027
CLK	input	0.0036
SETN	input	0.0063
RN	input	0.0078

DELAY AND OUTPUT TRANSITION TIME corresponding to min slew and load

Input Pin	Output	When Condition	Tin (ns)	Out Load (pf)	Delay (ns)	Tout (ns)
CLK(LH)	Q(HL)	!D&RN&!SE&SETN&!SI	0.0100	0.0010	0.7460	0.0405
CLK(LH)	Q(HL)	!D&RN&!SE&SETN&SI	0.0100	0.0010	0.7460	0.0405
CLK(LH)	Q(HL)	!D&RN&SE&SETN&!SI	0.0100	0.0010	0.7461	0.0405
CLK(LH)	Q(HL)	D&RN&SE&SETN&!SI	0.0100	0.0010	0.7460	0.0404
CLK(LH)	Q(LH)	!D&RN&SE&SETN&SI	0.0100	0.0010	0.8095	0.0529
CLK(LH)	Q(LH)	D&RN&!SE&SETN&!SI	0.0100	0.0010	0.8096	0.0530
CLK(LH)	Q(LH)	D&RN&!SE&SETN&SI	0.0100	0.0010	0.8095	0.0531
CLK(LH)	Q(LH)	D&RN&SE&SETN&SI	0.0100	0.0010	0.8095	0.0529
SETN(HL)	Q(LH)	!CLK&!D&RN&!SE&!SI	0.0100	0.0010	0.6886	0.0526
SETN(HL)	Q(LH)	!CLK&D&RN&SE&!SI	0.0100	0.0010	0.6886	0.0526
SETN(HL)	Q(LH)	!CLK&D&RN&!SE&SI	0.0100	0.0010	0.6888	0.0526
SETN(HL)	Q(LH)	!CLK&D&RN&SE&SI	0.0100	0.0010	0.6888	0.0526
SETN(HL)	Q(LH)	CLK&D&RN&!SE&!SI	0.0100	0.0010	0.7349	0.0527
SETN(HL)	Q(LH)	CLK&D&RN&SE&!SI	0.0100	0.0010	0.7347	0.0527
SETN(HL)	Q(LH)	CLK&D&RN&!SE&SI	0.0100	0.0010	0.7347	0.0525
SETN(HL)	Q(LH)	CLK&D&RN&SE&SI	0.0100	0.0010	0.7347	0.0526
SETN(HL)	Q(LH)	!CLK&!D&RN&SE&!SI	0.0100	0.0010	0.6886	0.0526
SETN(HL)	Q(LH)	!CLK&!D&RN&!SE&SI	0.0100	0.0010	0.6886	0.0526
SETN(HL)	Q(LH)	!CLK&!D&RN&SE&SI	0.0100	0.0010	0.6888	0.0526
SETN(HL)	Q(LH)	CLK&!D&RN&!SE&!SI	0.0100	0.0010	0.7347	0.0527
SETN(HL)	Q(LH)	CLK&!D&RN&SE&!SI	0.0100	0.0010	0.7347	0.0527
SETN(HL)	Q(LH)	CLK&!D&RN&!SE&SI	0.0100	0.0010	0.7347	0.0527
SETN(HL)	Q(LH)	CLK&!D&RN&SE&SI	0.0100	0.0010	0.7347	0.0526
SETN(HL)	Q(LH)	!CLK&D&RN&!SE&!SI	0.0100	0.0010	0.6888	0.0526
RN(HL)	Q(HL)	!CLK&!D&!SE&SETN&!SI	0.0100	0.0010	0.1950	0.0367
RN(HL)	Q(HL)	!CLK&D&SE&SETN&!SI	0.0100	0.0010	0.1950	0.0366
RN(HL)	Q(HL)	!CLK&D&!SE&SETN&SI	0.0100	0.0010	0.1950	0.0366
RN(HL)	Q(HL)	!CLK&D&SE&SETN&SI	0.0100	0.0010	0.1950	0.0366
RN(HL)	Q(HL)	CLK&D&!SE&SETN&!SI	0.0100	0.0010	0.1951	0.0364
RN(HL)	Q(HL)	CLK&D&SE&SETN&!SI	0.0100	0.0010	0.1951	0.0364
RN(HL)	Q(HL)	CLK&D&!SE&SETN&SI	0.0100	0.0010	0.1952	0.0364
RN(HL)	Q(HL)	CLK&D&SE&SETN&SI	0.0100	0.0010	0.1951	0.0364
RN(HL)	Q(HL)	!CLK&!D&!SE&!SETN&!SI	0.0100	0.0010	0.1949	0.0362
RN(HL)	Q(HL)	!CLK&!D&!SE&!SETN&SI	0.0100	0.0010	0.1949	0.0362
RN(HL)	Q(HL)	!CLK&!D&SE&!SETN&!SI	0.0100	0.0010	0.1949	0.0362
RN(HL)	Q(HL)	!CLK&!D&SE&!SETN&SI	0.0100	0.0010	0.1949	0.0362

continues on next page

Table 137 – continued from previous page

RN(HL)	Q(HL)	!CLK&D&!SE&!SETN&!SI	0.0100	0.0010	0.1949	0.0362
RN(HL)	Q(HL)	!CLK&D&!SE&!SETN&SI	0.0100	0.0010	0.1949	0.0362
RN(HL)	Q(HL)	!CLK&D&SE&!SETN&!SI	0.0100	0.0010	0.1949	0.0362
RN(HL)	Q(HL)	!CLK&D&SE&!SETN&SI	0.0100	0.0010	0.1949	0.0362
RN(HL)	Q(HL)	CLK&!D&!SE&!SETN&!SI	0.0100	0.0010	0.1950	0.0362
RN(HL)	Q(HL)	CLK&!D&!SE&!SETN&SI	0.0100	0.0010	0.1951	0.0363
RN(HL)	Q(HL)	CLK&!D&SE&!SETN&!SI	0.0100	0.0010	0.1951	0.0363
RN(HL)	Q(HL)	CLK&!D&SE&!SETN&SI	0.0100	0.0010	0.1951	0.0363
RN(HL)	Q(HL)	CLK&D&!SE&!SETN&!SI	0.0100	0.0010	0.1950	0.0362
RN(HL)	Q(HL)	CLK&D&!SE&!SETN&SI	0.0100	0.0010	0.1951	0.0363
RN(HL)	Q(HL)	CLK&D&SE&!SETN&!SI	0.0100	0.0010	0.1951	0.0363
RN(HL)	Q(HL)	CLK&D&SE&!SETN&SI	0.0100	0.0010	0.1951	0.0363
RN(HL)	Q(HL)	!CLK&!D&SE&SETN&!SI	0.0100	0.0010	0.1950	0.0366
RN(HL)	Q(HL)	!CLK&!D&!SE&SETN&SI	0.0100	0.0010	0.1950	0.0366
RN(HL)	Q(HL)	!CLK&!D&SE&SETN&SI	0.0100	0.0010	0.1950	0.0366
RN(HL)	Q(HL)	CLK&!D&!SE&SETN&!SI	0.0100	0.0010	0.1951	0.0364
RN(HL)	Q(HL)	CLK&!D&SE&SETN&!SI	0.0100	0.0010	0.1951	0.0364
RN(HL)	Q(HL)	CLK&!D&!SE&SETN&SI	0.0100	0.0010	0.1951	0.0364
RN(HL)	Q(HL)	CLK&!D&SE&SETN&SI	0.0100	0.0010	0.1951	0.0364
RN(HL)	Q(HL)	!CLK&D&!SE&SETN&!SI	0.0100	0.0010	0.1950	0.0366
RN(LH)	Q(LH)	!CLK&!D&!SE&!SETN&!SI	0.0100	0.0010	0.3388	0.0509
RN(LH)	Q(LH)	!CLK&!D&!SE&!SETN&SI	0.0100	0.0010	0.3388	0.0509
RN(LH)	Q(LH)	!CLK&!D&SE&!SETN&!SI	0.0100	0.0010	0.3388	0.0509
RN(LH)	Q(LH)	!CLK&!D&SE&!SETN&SI	0.0100	0.0010	0.3388	0.0509
RN(LH)	Q(LH)	!CLK&D&!SE&!SETN&!SI	0.0100	0.0010	0.3388	0.0509
RN(LH)	Q(LH)	!CLK&D&!SE&!SETN&SI	0.0100	0.0010	0.3388	0.0509
RN(LH)	Q(LH)	!CLK&D&SE&!SETN&!SI	0.0100	0.0010	0.3388	0.0509
RN(LH)	Q(LH)	!CLK&D&SE&!SETN&SI	0.0100	0.0010	0.3388	0.0509
RN(LH)	Q(LH)	CLK&!D&!SE&!SETN&!SI	0.0100	0.0010	0.3406	0.0510
RN(LH)	Q(LH)	CLK&!D&!SE&!SETN&SI	0.0100	0.0010	0.3406	0.0510
RN(LH)	Q(LH)	CLK&!D&SE&!SETN&!SI	0.0100	0.0010	0.3406	0.0510
RN(LH)	Q(LH)	CLK&!D&SE&!SETN&SI	0.0100	0.0010	0.3406	0.0510
RN(LH)	Q(LH)	CLK&D&!SE&!SETN&!SI	0.0100	0.0010	0.3406	0.0510
RN(LH)	Q(LH)	CLK&D&!SE&!SETN&SI	0.0100	0.0010	0.3406	0.0510
RN(LH)	Q(LH)	CLK&D&SE&!SETN&!SI	0.0100	0.0010	0.3406	0.0510
RN(LH)	Q(LH)	CLK&D&SE&!SETN&SI	0.0100	0.0010	0.3406	0.0510

DYNAMIC ENERGY

Input Pin	When Condition	Tin (ns)	Output	Out Load (pf)	Energy (uW/MHz)
CLK	!D&RN&!SE&SETN&!SI	0.0100	Q(HL)	0.0010	0.8084
CLK	!D&RN&!SE&SETN&SI	0.0100	Q(HL)	0.0010	0.8081
CLK	!D&RN&SE&SETN&!SI	0.0100	Q(HL)	0.0010	0.8082
CLK	D&RN&SE&SETN&!SI	0.0100	Q(HL)	0.0010	0.8081
CLK	!D&RN&SE&SETN&SI	0.0100	Q(LH)	0.0010	0.9295
CLK	D&RN&!SE&SETN&!SI	0.0100	Q(LH)	0.0010	0.9293
CLK	D&RN&!SE&SETN&SI	0.0100	Q(LH)	0.0010	0.9294

continues on next page

Table 138 – continued from previous page

CLK	D&RN&SE&SETN&SI	0.0100	Q(LH)	0.0010	0.9295
SETN	!CLK&!D&RN&!SE&!SI	0.0100	Q(LH)	0.0010	0.7932
SETN	!CLK&D&RN&SE&!SI	0.0100	Q(LH)	0.0010	0.7932
SETN	!CLK&D&RN&!SE&SI	0.0100	Q(LH)	0.0010	0.6795
SETN	!CLK&D&RN&SE&SI	0.0100	Q(LH)	0.0010	0.6795
SETN	CLK&D&RN&!SE&!SI	0.0100	Q(LH)	0.0010	0.8922
SETN	CLK&D&RN&SE&!SI	0.0100	Q(LH)	0.0010	0.8919
SETN	CLK&D&RN&!SE&SI	0.0100	Q(LH)	0.0010	0.8922
SETN	CLK&D&RN&SE&SI	0.0100	Q(LH)	0.0010	0.8920
SETN	!CLK&!D&RN&SE&!SI	0.0100	Q(LH)	0.0010	0.7931
SETN	!CLK&!D&RN&!SE&SI	0.0100	Q(LH)	0.0010	0.7932
SETN	!CLK&!D&RN&SE&SI	0.0100	Q(LH)	0.0010	0.6795
SETN	CLK&!D&RN&!SE&!SI	0.0100	Q(LH)	0.0010	0.8919
SETN	CLK&!D&RN&SE&!SI	0.0100	Q(LH)	0.0010	0.8919
SETN	CLK&!D&RN&!SE&SI	0.0100	Q(LH)	0.0010	0.8919
SETN	CLK&!D&RN&SE&SI	0.0100	Q(LH)	0.0010	0.8920
SETN	!CLK&D&RN&!SE&!SI	0.0100	Q(LH)	0.0010	0.6795
RN	!CLK&!D&!SE&SETN&!SI	0.0100	Q(HL)	0.0010	0.5620
RN	!CLK&D&SE&SETN&!SI	0.0100	Q(HL)	0.0010	0.5619
RN	!CLK&D&!SE&SETN&SI	0.0100	Q(HL)	0.0010	0.5620
RN	!CLK&D&SE&SETN&SI	0.0100	Q(HL)	0.0010	0.5619
RN	CLK&D&!SE&SETN&!SI	0.0100	Q(HL)	0.0010	0.7838
RN	CLK&D&SE&SETN&!SI	0.0100	Q(HL)	0.0010	0.7846
RN	CLK&D&!SE&SETN&SI	0.0100	Q(HL)	0.0010	0.7838
RN	CLK&D&SE&SETN&SI	0.0100	Q(HL)	0.0010	0.7838
RN	!CLK&!D&!SE&!SETN&!SI	0.0100	Q(HL)	0.0010	0.4187
RN	!CLK&!D&!SE&!SETN&SI	0.0100	Q(HL)	0.0010	0.4187
RN	!CLK&!D&SE&!SETN&!SI	0.0100	Q(HL)	0.0010	0.4187
RN	!CLK&!D&SE&!SETN&SI	0.0100	Q(HL)	0.0010	0.4169
RN	!CLK&D&!SE&!SETN&!SI	0.0100	Q(HL)	0.0010	0.4169
RN	!CLK&D&!SE&!SETN&SI	0.0100	Q(HL)	0.0010	0.4169
RN	!CLK&D&SE&!SETN&!SI	0.0100	Q(HL)	0.0010	0.4187
RN	!CLK&D&SE&!SETN&SI	0.0100	Q(HL)	0.0010	0.4169
RN	CLK&!D&!SE&!SETN&!SI	0.0100	Q(HL)	0.0010	0.5635
RN	CLK&!D&!SE&!SETN&SI	0.0100	Q(HL)	0.0010	0.5637
RN	CLK&!D&SE&!SETN&!SI	0.0100	Q(HL)	0.0010	0.5636
RN	CLK&!D&SE&!SETN&SI	0.0100	Q(HL)	0.0010	0.5636
RN	CLK&D&!SE&!SETN&!SI	0.0100	Q(HL)	0.0010	0.5635
RN	CLK&D&!SE&!SETN&SI	0.0100	Q(HL)	0.0010	0.5637
RN	CLK&D&SE&!SETN&!SI	0.0100	Q(HL)	0.0010	0.5636
RN	CLK&D&SE&!SETN&SI	0.0100	Q(HL)	0.0010	0.5636
RN	!CLK&!D&SE&SETN&!SI	0.0100	Q(HL)	0.0010	0.5619
RN	!CLK&!D&!SE&SETN&SI	0.0100	Q(HL)	0.0010	0.5619
RN	!CLK&!D&SE&SETN&SI	0.0100	Q(HL)	0.0010	0.5620
RN	CLK&!D&!SE&SETN&!SI	0.0100	Q(HL)	0.0010	0.7845
RN	CLK&!D&SE&SETN&!SI	0.0100	Q(HL)	0.0010	0.7846
RN	CLK&!D&!SE&SETN&SI	0.0100	Q(HL)	0.0010	0.7846
RN	CLK&!D&SE&SETN&SI	0.0100	Q(HL)	0.0010	0.7838
RN	!CLK&D&!SE&SETN&!SI	0.0100	Q(HL)	0.0010	0.5620
RN	!CLK&!D&!SE&!SETN&!SI	0.0100	Q(LH)	0.0010	0.3160
RN	!CLK&!D&!SE&!SETN&SI	0.0100	Q(LH)	0.0010	0.3160
RN	!CLK&!D&SE&!SETN&!SI	0.0100	Q(LH)	0.0010	0.3160

continues on next page

Table 138 – continued from previous page

RN	!CLK&!D&SE&!SETN&SI	0.0100	Q(LH)	0.0010	0.3169
RN	!CLK&D&!SE&!SETN&!SI	0.0100	Q(LH)	0.0010	0.3169
RN	!CLK&D&!SE&!SETN&SI	0.0100	Q(LH)	0.0010	0.3169
RN	!CLK&D&SE&!SETN&!SI	0.0100	Q(LH)	0.0010	0.3160
RN	!CLK&D&SE&!SETN&SI	0.0100	Q(LH)	0.0010	0.3169
RN	CLK&!D&!SE&!SETN&!SI	0.0100	Q(LH)	0.0010	0.4100
RN	CLK&!D&!SE&!SETN&SI	0.0100	Q(LH)	0.0010	0.4100
RN	CLK&!D&SE&!SETN&!SI	0.0100	Q(LH)	0.0010	0.4100
RN	CLK&!D&SE&!SETN&SI	0.0100	Q(LH)	0.0010	0.4100
RN	CLK&D&!SE&!SETN&!SI	0.0100	Q(LH)	0.0010	0.4100
RN	CLK&D&!SE&!SETN&SI	0.0100	Q(LH)	0.0010	0.4100
RN	CLK&D&SE&!SETN&!SI	0.0100	Q(LH)	0.0010	0.4100
RN	CLK&D&SE&!SETN&SI	0.0100	Q(LH)	0.0010	0.4100
SETN(HL)	!CLK&!D&!RN&!SE&!SI	0.0100	n/a	n/a	0.3763
SETN(HL)	!CLK&!D&!RN&!SE&SI	0.0100	n/a	n/a	0.3763
SETN(HL)	!CLK&!D&!RN&SE&!SI	0.0100	n/a	n/a	0.3763
SETN(HL)	!CLK&!D&!RN&SE&SI	0.0100	n/a	n/a	0.2695
SETN(HL)	!CLK&D&!RN&!SE&!SI	0.0100	n/a	n/a	0.2695
SETN(HL)	!CLK&D&!RN&!SE&SI	0.0100	n/a	n/a	0.2695
SETN(HL)	!CLK&D&!RN&SE&!SI	0.0100	n/a	n/a	0.3763
SETN(HL)	!CLK&D&!RN&SE&SI	0.0100	n/a	n/a	0.2695
SETN(HL)	CLK&!D&!RN&!SE&!SI	0.0100	n/a	n/a	0.3764
SETN(HL)	CLK&!D&!RN&!SE&SI	0.0100	n/a	n/a	0.3764
SETN(HL)	CLK&!D&!RN&SE&!SI	0.0100	n/a	n/a	0.3764
SETN(HL)	CLK&!D&!RN&SE&SI	0.0100	n/a	n/a	0.3764
SETN(HL)	CLK&D&!RN&!SE&!SI	0.0100	n/a	n/a	0.3764
SETN(HL)	CLK&D&!RN&!SE&SI	0.0100	n/a	n/a	0.3764
SETN(HL)	CLK&D&!RN&SE&!SI	0.0100	n/a	n/a	0.3764
SETN(HL)	CLK&D&!RN&SE&SI	0.0100	n/a	n/a	0.3764
SETN(HL)	CLK&!D&RN&!SE&!SI	0.0100	n/a	n/a	0.0445
SETN(HL)	CLK&!D&RN&SE&!SI	0.0100	n/a	n/a	0.0445
SETN(HL)	CLK&!D&RN&!SE&SI	0.0100	n/a	n/a	0.0445
SETN(HL)	CLK&!D&RN&SE&SI	0.0100	n/a	n/a	0.0444
SETN(HL)	!CLK&D&RN&!SE&!SI	0.0100	n/a	n/a	0.0444
SETN(HL)	!CLK&D&RN&SE&!SI	0.0100	n/a	n/a	0.1577
SETN(HL)	!CLK&D&RN&!SE&SI	0.0100	n/a	n/a	0.0444
SETN(HL)	!CLK&D&RN&SE&SI	0.0100	n/a	n/a	0.0444
SETN(HL)	CLK&D&RN&!SE&!SI	0.0100	n/a	n/a	0.0444
SETN(HL)	CLK&D&RN&SE&!SI	0.0100	n/a	n/a	0.0445
SETN(HL)	!CLK&!D&RN&!SE&!SI	0.0100	n/a	n/a	0.1577
SETN(HL)	CLK&D&RN&!SE&SI	0.0100	n/a	n/a	0.0444
SETN(HL)	CLK&D&RN&SE&SI	0.0100	n/a	n/a	0.0444
SETN(HL)	!CLK&!D&RN&SE&!SI	0.0100	n/a	n/a	0.1577
SETN(HL)	!CLK&!D&RN&!SE&SI	0.0100	n/a	n/a	0.1577
SETN(HL)	!CLK&!D&RN&SE&SI	0.0100	n/a	n/a	0.0444
D(HL)	!CLK&!RN&!SE&!SETN&!SI	0.0100	n/a	n/a	0.2346
D(HL)	!CLK&!RN&!SE&!SETN&SI	0.0100	n/a	n/a	0.2346
D(HL)	!CLK&!RN&!SE&SETN&!SI	0.0100	n/a	n/a	0.3483
D(HL)	!CLK&!RN&!SE&SETN&SI	0.0100	n/a	n/a	0.3483
D(HL)	!CLK&!RN&SE&!SETN&!SI	0.0100	n/a	n/a	0.0203
D(HL)	!CLK&!RN&SE&!SETN&SI	0.0100	n/a	n/a	0.0100
D(HL)	!CLK&!RN&SE&SETN&!SI	0.0100	n/a	n/a	0.0203

continues on next page

Table 138 – continued from previous page

D(HL)	!CLK&!RN&SE&SETN&SI	0.0100	n/a	n/a	0.0100
D(HL)	CLK&!RN&!SE&!SETN&!SI	0.0100	n/a	n/a	0.0249
D(HL)	CLK&!RN&!SE&!SETN&SI	0.0100	n/a	n/a	0.0249
D(HL)	CLK&!RN&!SE&SETN&!SI	0.0100	n/a	n/a	0.0249
D(HL)	CLK&!RN&!SE&SETN&SI	0.0100	n/a	n/a	0.0249
D(HL)	CLK&!RN&SE&!SETN&!SI	0.0100	n/a	n/a	0.0236
D(HL)	CLK&!RN&SE&!SETN&SI	0.0100	n/a	n/a	0.0095
D(HL)	CLK&!RN&SE&SETN&!SI	0.0100	n/a	n/a	0.0236
D(HL)	CLK&!RN&SE&SETN&SI	0.0100	n/a	n/a	0.0095
D(HL)	!CLK&RN&!SE&SETN&!SI	0.0100	n/a	n/a	0.3381
D(HL)	!CLK&RN&SE&SETN&!SI	0.0100	n/a	n/a	0.0203
D(HL)	!CLK&RN&!SE&SETN&SI	0.0100	n/a	n/a	0.3381
D(HL)	!CLK&RN&SE&SETN&SI	0.0100	n/a	n/a	0.0100
D(HL)	CLK&RN&!SE&SETN&!SI	0.0100	n/a	n/a	0.0564
D(HL)	CLK&RN&SE&SETN&!SI	0.0100	n/a	n/a	0.0202
D(HL)	!CLK&RN&!SE&!SETN&!SI	0.0100	n/a	n/a	0.2346
D(HL)	!CLK&RN&!SE&!SETN&SI	0.0100	n/a	n/a	0.2346
D(HL)	!CLK&RN&SE&!SETN&!SI	0.0100	n/a	n/a	0.0203
D(HL)	!CLK&RN&SE&!SETN&SI	0.0100	n/a	n/a	0.0100
D(HL)	CLK&RN&!SE&!SETN&!SI	0.0100	n/a	n/a	0.0224
D(HL)	CLK&RN&!SE&!SETN&SI	0.0100	n/a	n/a	0.0224
D(HL)	CLK&RN&SE&!SETN&!SI	0.0100	n/a	n/a	0.0201
D(HL)	CLK&RN&SE&!SETN&SI	0.0100	n/a	n/a	0.0095
D(HL)	CLK&RN&!SE&SETN&SI	0.0100	n/a	n/a	0.0564
D(HL)	CLK&RN&SE&SETN&SI	0.0100	n/a	n/a	0.0091
SE(HL)	!CLK&!D&!RN&!SETN&!SI	0.0100	n/a	n/a	0.1306
SE(HL)	!CLK&!D&!RN&!SETN&SI	0.0100	n/a	n/a	0.3599
SE(HL)	!CLK&!D&!RN&SETN&!SI	0.0100	n/a	n/a	0.1306
SE(HL)	!CLK&!D&!RN&SETN&SI	0.0100	n/a	n/a	0.4734
SE(HL)	!CLK&D&!RN&!SETN&!SI	0.0100	n/a	n/a	0.2203
SE(HL)	!CLK&D&!RN&!SETN&SI	0.0100	n/a	n/a	0.1327
SE(HL)	!CLK&D&!RN&SETN&!SI	0.0100	n/a	n/a	0.3645
SE(HL)	!CLK&D&!RN&SETN&SI	0.0100	n/a	n/a	0.1328
SE(HL)	CLK&!D&!RN&!SETN&!SI	0.0100	n/a	n/a	0.1353
SE(HL)	CLK&!D&!RN&!SETN&SI	0.0100	n/a	n/a	0.1347
SE(HL)	CLK&!D&!RN&SETN&!SI	0.0100	n/a	n/a	0.1353
SE(HL)	CLK&!D&!RN&SETN&SI	0.0100	n/a	n/a	0.1347
SE(HL)	CLK&D&!RN&!SETN&!SI	0.0100	n/a	n/a	0.1344
SE(HL)	CLK&D&!RN&!SETN&SI	0.0100	n/a	n/a	0.1375
SE(HL)	CLK&D&!RN&SETN&!SI	0.0100	n/a	n/a	0.1343
SE(HL)	CLK&D&!RN&SETN&SI	0.0100	n/a	n/a	0.1375
SE(HL)	CLK&!D&RN&SETN&!SI	0.0100	n/a	n/a	0.1306
SE(HL)	CLK&!D&RN&SETN&SI	0.0100	n/a	n/a	0.1820
SE(HL)	!CLK&!D&RN&!SETN&!SI	0.0100	n/a	n/a	0.1306
SE(HL)	!CLK&!D&RN&!SETN&SI	0.0100	n/a	n/a	0.3599
SE(HL)	!CLK&D&RN&!SETN&!SI	0.0100	n/a	n/a	0.2203
SE(HL)	!CLK&D&RN&!SETN&SI	0.0100	n/a	n/a	0.1326
SE(HL)	CLK&!D&RN&!SETN&!SI	0.0100	n/a	n/a	0.1305
SE(HL)	CLK&!D&RN&!SETN&SI	0.0100	n/a	n/a	0.1322
SE(HL)	CLK&D&RN&!SETN&!SI	0.0100	n/a	n/a	0.1343
SE(HL)	CLK&D&RN&!SETN&SI	0.0100	n/a	n/a	0.1389
SE(HL)	!CLK&D&RN&SETN&!SI	0.0100	n/a	n/a	0.3709

continues on next page

Table 138 – continued from previous page

SE(HL)	!CLK&D&RN&SETN&SI	0.0100	n/a	n/a	0.1327
SE(HL)	CLK&D&RN&SETN&!SI	0.0100	n/a	n/a	0.1358
SE(HL)	CLK&D&RN&SETN&SI	0.0100	n/a	n/a	0.1327
SE(HL)	!CLK&!D&RN&SETN&!SI	0.0100	n/a	n/a	0.1306
SE(HL)	!CLK&!D&RN&SETN&SI	0.0100	n/a	n/a	0.4632
SE(LH)	!CLK&!D&!RN&!SETN&!SI	0.0100	n/a	n/a	0.0025
SE(LH)	!CLK&!D&!RN&!SETN&SI	0.0100	n/a	n/a	0.0880
SE(LH)	!CLK&!D&!RN&SETN&!SI	0.0100	n/a	n/a	0.0025
SE(LH)	!CLK&!D&!RN&SETN&SI	0.0100	n/a	n/a	0.2372
SE(LH)	!CLK&D&!RN&!SETN&!SI	0.0100	n/a	n/a	0.2435
SE(LH)	!CLK&D&!RN&!SETN&SI	0.0100	n/a	n/a	-0.0060
SE(LH)	!CLK&D&!RN&SETN&!SI	0.0100	n/a	n/a	0.3683
SE(LH)	!CLK&D&!RN&SETN&SI	0.0100	n/a	n/a	-0.0060
SE(LH)	CLK&!D&!RN&!SETN&!SI	0.0100	n/a	n/a	0.0012
SE(LH)	CLK&!D&!RN&!SETN&SI	0.0100	n/a	n/a	-0.0048
SE(LH)	CLK&!D&!RN&SETN&!SI	0.0100	n/a	n/a	0.0012
SE(LH)	CLK&!D&!RN&SETN&SI	0.0100	n/a	n/a	-0.0048
SE(LH)	CLK&D&!RN&!SETN&!SI	0.0100	n/a	n/a	0.0040
SE(LH)	CLK&D&!RN&!SETN&SI	0.0100	n/a	n/a	-0.0080
SE(LH)	CLK&D&!RN&SETN&!SI	0.0100	n/a	n/a	0.0040
SE(LH)	CLK&D&!RN&SETN&SI	0.0100	n/a	n/a	-0.0080
SE(LH)	CLK&!D&RN&SETN&!SI	0.0100	n/a	n/a	0.0012
SE(LH)	CLK&!D&RN&SETN&SI	0.0100	n/a	n/a	-0.0048
SE(LH)	!CLK&!D&RN&!SETN&!SI	0.0100	n/a	n/a	0.0025
SE(LH)	!CLK&!D&RN&!SETN&SI	0.0100	n/a	n/a	0.0880
SE(LH)	!CLK&D&RN&!SETN&!SI	0.0100	n/a	n/a	0.2435
SE(LH)	!CLK&D&RN&!SETN&SI	0.0100	n/a	n/a	-0.0060
SE(LH)	CLK&!D&RN&!SETN&!SI	0.0100	n/a	n/a	0.0012
SE(LH)	CLK&!D&RN&!SETN&SI	0.0100	n/a	n/a	-0.0048
SE(LH)	CLK&D&RN&!SETN&!SI	0.0100	n/a	n/a	0.0040
SE(LH)	CLK&D&RN&!SETN&SI	0.0100	n/a	n/a	-0.0080
SE(LH)	!CLK&D&RN&SETN&!SI	0.0100	n/a	n/a	0.3575
SE(LH)	!CLK&D&RN&SETN&SI	0.0100	n/a	n/a	-0.0060
SE(LH)	CLK&D&RN&SETN&!SI	0.0100	n/a	n/a	0.0397
SE(LH)	CLK&D&RN&SETN&SI	0.0100	n/a	n/a	-0.0077
SE(LH)	!CLK&!D&RN&SETN&!SI	0.0100	n/a	n/a	0.0024
SE(LH)	!CLK&!D&RN&SETN&SI	0.0100	n/a	n/a	0.2435
CLK(LH)	!D&!RN&!SE&!SETN&!SI	0.0100	n/a	n/a	0.2520
CLK(LH)	!D&!RN&!SE&!SETN&SI	0.0100	n/a	n/a	0.2520
CLK(LH)	!D&!RN&!SE&SETN&!SI	0.0100	n/a	n/a	0.2413
CLK(LH)	!D&!RN&!SE&SETN&SI	0.0100	n/a	n/a	0.2413
CLK(LH)	!D&!RN&SE&!SETN&!SI	0.0100	n/a	n/a	0.2520
CLK(LH)	!D&!RN&SE&!SETN&SI	0.0100	n/a	n/a	0.3560
CLK(LH)	!D&!RN&SE&SETN&!SI	0.0100	n/a	n/a	0.2413
CLK(LH)	!D&!RN&SE&SETN&SI	0.0100	n/a	n/a	0.5019
CLK(LH)	D&!RN&!SE&!SETN&!SI	0.0100	n/a	n/a	0.3559
CLK(LH)	D&!RN&!SE&!SETN&SI	0.0100	n/a	n/a	0.3559
CLK(LH)	D&!RN&!SE&SETN&!SI	0.0100	n/a	n/a	0.5017
CLK(LH)	D&!RN&!SE&SETN&SI	0.0100	n/a	n/a	0.5017
CLK(LH)	D&!RN&SE&!SETN&!SI	0.0100	n/a	n/a	0.2520
CLK(LH)	D&!RN&SE&!SETN&SI	0.0100	n/a	n/a	0.3561
CLK(LH)	D&!RN&SE&SETN&!SI	0.0100	n/a	n/a	0.2413

continues on next page

Table 138 – continued from previous page

CLK(LH)	D&!RN&SE&SETN&SI	0.0100	n/a	n/a	0.5019
CLK(LH)	!D&RN&!SE&SETN&!SI	0.0100	n/a	n/a	0.2413
CLK(LH)	!D&RN&SE&SETN&!SI	0.0100	n/a	n/a	0.2415
CLK(LH)	!D&RN&!SE&SETN&SI	0.0100	n/a	n/a	0.2413
CLK(LH)	!D&RN&SE&SETN&SI	0.0100	n/a	n/a	0.2567
CLK(LH)	D&RN&!SE&SETN&!SI	0.0100	n/a	n/a	0.2568
CLK(LH)	D&RN&SE&SETN&!SI	0.0100	n/a	n/a	0.2414
CLK(LH)	!D&RN&!SE&!SETN&!SI	0.0100	n/a	n/a	0.3177
CLK(LH)	!D&RN&!SE&!SETN&SI	0.0100	n/a	n/a	0.3177
CLK(LH)	!D&RN&SE&!SETN&!SI	0.0100	n/a	n/a	0.3178
CLK(LH)	!D&RN&SE&!SETN&SI	0.0100	n/a	n/a	0.2569
CLK(LH)	D&RN&!SE&!SETN&!SI	0.0100	n/a	n/a	0.2568
CLK(LH)	D&RN&!SE&!SETN&SI	0.0100	n/a	n/a	0.2568
CLK(LH)	D&RN&SE&!SETN&!SI	0.0100	n/a	n/a	0.3177
CLK(LH)	D&RN&SE&!SETN&SI	0.0100	n/a	n/a	0.2568
CLK(LH)	D&RN&!SE&SETN&SI	0.0100	n/a	n/a	0.2567
CLK(LH)	D&RN&SE&SETN&SI	0.0100	n/a	n/a	0.2567
SI(LH)	!CLK&!D&!RN&!SE&!SETN	0.0100	n/a	n/a	-0.0198
SI(LH)	!CLK&!D&!RN&!SE&SETN	0.0100	n/a	n/a	-0.0198
SI(LH)	!CLK&!D&!RN&SE&!SETN	0.0100	n/a	n/a	0.0860
SI(LH)	!CLK&!D&!RN&SE&SETN	0.0100	n/a	n/a	0.2361
SI(LH)	!CLK&D&!RN&!SE&!SETN	0.0100	n/a	n/a	-0.0183
SI(LH)	!CLK&D&!RN&!SE&SETN	0.0100	n/a	n/a	-0.0183
SI(LH)	!CLK&D&!RN&SE&!SETN	0.0100	n/a	n/a	0.0755
SI(LH)	!CLK&D&!RN&SE&SETN	0.0100	n/a	n/a	0.2236
SI(LH)	CLK&!D&!RN&!SE&!SETN	0.0100	n/a	n/a	-0.0198
SI(LH)	CLK&!D&!RN&!SE&SETN	0.0100	n/a	n/a	-0.0198
SI(LH)	CLK&!D&!RN&SE&!SETN	0.0100	n/a	n/a	-0.0158
SI(LH)	CLK&!D&!RN&SE&SETN	0.0100	n/a	n/a	-0.0158
SI(LH)	CLK&D&!RN&!SE&!SETN	0.0100	n/a	n/a	-0.0188
SI(LH)	CLK&D&!RN&!SE&SETN	0.0100	n/a	n/a	-0.0188
SI(LH)	CLK&D&!RN&SE&!SETN	0.0100	n/a	n/a	-0.0157
SI(LH)	CLK&D&!RN&SE&SETN	0.0100	n/a	n/a	-0.0158
SI(LH)	CLK&!D&RN&!SE&SETN	0.0100	n/a	n/a	-0.0198
SI(LH)	CLK&!D&RN&SE&SETN	0.0100	n/a	n/a	-0.0158
SI(LH)	!CLK&D&RN&!SE&SETN	0.0100	n/a	n/a	-0.0183
SI(LH)	!CLK&D&RN&SE&SETN	0.0100	n/a	n/a	0.2298
SI(LH)	!CLK&!D&RN&!SE&!SETN	0.0100	n/a	n/a	-0.0198
SI(LH)	!CLK&!D&RN&SE&!SETN	0.0100	n/a	n/a	0.0860
SI(LH)	!CLK&D&RN&!SE&!SETN	0.0100	n/a	n/a	-0.0183
SI(LH)	!CLK&D&RN&SE&!SETN	0.0100	n/a	n/a	0.0755
SI(LH)	CLK&!D&RN&!SE&!SETN	0.0100	n/a	n/a	-0.0198
SI(LH)	CLK&!D&RN&SE&!SETN	0.0100	n/a	n/a	-0.0158
SI(LH)	CLK&D&RN&!SE&!SETN	0.0100	n/a	n/a	-0.0188
SI(LH)	CLK&D&RN&SE&!SETN	0.0100	n/a	n/a	-0.0158
SI(LH)	CLK&D&RN&!SE&SETN	0.0100	n/a	n/a	-0.0184
SI(LH)	CLK&D&RN&SE&SETN	0.0100	n/a	n/a	-0.0158
SI(LH)	!CLK&!D&RN&!SE&SETN	0.0100	n/a	n/a	-0.0198
SI(LH)	!CLK&!D&RN&SE&SETN	0.0100	n/a	n/a	0.2425
CLK(HL)	!D&!RN&!SE&!SETN&!SI	0.0100	n/a	n/a	0.3777
CLK(HL)	!D&!RN&!SE&!SETN&SI	0.0100	n/a	n/a	0.3777
CLK(HL)	!D&!RN&!SE&SETN&!SI	0.0100	n/a	n/a	0.3734

continues on next page

Table 138 – continued from previous page

CLK(HL)	!D&!RN&!SE&SETN&SI	0.0100	n/a	n/a	0.3734
CLK(HL)	!D&!RN&SE&!SETN&!SI	0.0100	n/a	n/a	0.3957
CLK(HL)	!D&!RN&SE&!SETN&SI	0.0100	n/a	n/a	0.4103
CLK(HL)	!D&!RN&SE&SETN&!SI	0.0100	n/a	n/a	0.3925
CLK(HL)	!D&!RN&SE&SETN&SI	0.0100	n/a	n/a	0.5596
CLK(HL)	D&!RN&!SE&!SETN&!SI	0.0100	n/a	n/a	0.3908
CLK(HL)	D&!RN&!SE&!SETN&SI	0.0100	n/a	n/a	0.3908
CLK(HL)	D&!RN&!SE&SETN&!SI	0.0100	n/a	n/a	0.5318
CLK(HL)	D&!RN&!SE&SETN&SI	0.0100	n/a	n/a	0.5318
CLK(HL)	D&!RN&SE&!SETN&!SI	0.0100	n/a	n/a	0.4139
CLK(HL)	D&!RN&SE&!SETN&SI	0.0100	n/a	n/a	0.4000
CLK(HL)	D&!RN&SE&SETN&!SI	0.0100	n/a	n/a	0.4146
CLK(HL)	D&!RN&SE&SETN&SI	0.0100	n/a	n/a	0.5457
CLK(HL)	!D&RN&!SE&SETN&!SI	0.0100	n/a	n/a	0.3140
CLK(HL)	!D&RN&SE&SETN&!SI	0.0100	n/a	n/a	0.3140
CLK(HL)	!D&RN&!SE&SETN&SI	0.0100	n/a	n/a	0.3140
CLK(HL)	!D&RN&SE&SETN&SI	0.0100	n/a	n/a	0.3136
CLK(HL)	D&RN&!SE&SETN&!SI	0.0100	n/a	n/a	0.3137
CLK(HL)	D&RN&SE&SETN&!SI	0.0100	n/a	n/a	0.3140
CLK(HL)	!D&RN&!SE&!SETN&!SI	0.0100	n/a	n/a	0.4872
CLK(HL)	!D&RN&!SE&!SETN&SI	0.0100	n/a	n/a	0.4872
CLK(HL)	!D&RN&SE&!SETN&!SI	0.0100	n/a	n/a	0.5049
CLK(HL)	!D&RN&SE&!SETN&SI	0.0100	n/a	n/a	0.3540
CLK(HL)	D&RN&!SE&!SETN&!SI	0.0100	n/a	n/a	0.3345
CLK(HL)	D&RN&!SE&!SETN&SI	0.0100	n/a	n/a	0.3345
CLK(HL)	D&RN&SE&!SETN&!SI	0.0100	n/a	n/a	0.5225
CLK(HL)	D&RN&SE&!SETN&SI	0.0100	n/a	n/a	0.3436
CLK(HL)	D&RN&!SE&SETN&SI	0.0100	n/a	n/a	0.3137
CLK(HL)	D&RN&SE&SETN&SI	0.0100	n/a	n/a	0.3136
SI(HL)	!CLK&!D&!RN&!SE&!SETN	0.0100	n/a	n/a	0.0203
SI(HL)	!CLK&!D&!RN&!SE&SETN	0.0100	n/a	n/a	0.0203
SI(HL)	!CLK&!D&!RN&SE&!SETN	0.0100	n/a	n/a	0.2804
SI(HL)	!CLK&!D&!RN&SE&SETN	0.0100	n/a	n/a	0.4014
SI(HL)	!CLK&D&!RN&!SE&!SETN	0.0100	n/a	n/a	0.0202
SI(HL)	!CLK&D&!RN&!SE&SETN	0.0100	n/a	n/a	0.0202
SI(HL)	!CLK&D&!RN&SE&!SETN	0.0100	n/a	n/a	0.2839
SI(HL)	!CLK&D&!RN&SE&SETN	0.0100	n/a	n/a	0.4087
SI(HL)	CLK&!D&!RN&!SE&!SETN	0.0100	n/a	n/a	0.0202
SI(HL)	CLK&!D&!RN&!SE&SETN	0.0100	n/a	n/a	0.0202
SI(HL)	CLK&!D&!RN&SE&!SETN	0.0100	n/a	n/a	0.0220
SI(HL)	CLK&!D&!RN&SE&SETN	0.0100	n/a	n/a	0.0220
SI(HL)	CLK&D&!RN&!SE&!SETN	0.0100	n/a	n/a	0.0202
SI(HL)	CLK&D&!RN&!SE&SETN	0.0100	n/a	n/a	0.0202
SI(HL)	CLK&D&!RN&SE&!SETN	0.0100	n/a	n/a	0.0221
SI(HL)	CLK&D&!RN&SE&SETN	0.0100	n/a	n/a	0.0221
SI(HL)	CLK&!D&RN&!SE&SETN	0.0100	n/a	n/a	0.0201
SI(HL)	CLK&!D&RN&SE&SETN	0.0100	n/a	n/a	0.0873
SI(HL)	!CLK&D&RN&!SE&SETN	0.0100	n/a	n/a	0.0202
SI(HL)	!CLK&D&RN&SE&SETN	0.0100	n/a	n/a	0.3980
SI(HL)	!CLK&!D&RN&!SE&!SETN	0.0100	n/a	n/a	0.0203
SI(HL)	!CLK&!D&RN&SE&!SETN	0.0100	n/a	n/a	0.2804
SI(HL)	!CLK&D&RN&!SE&!SETN	0.0100	n/a	n/a	0.0202

continues on next page

Table 138 – continued from previous page

SI(HL)	!CLK&D&RN&SE&!SETN	0.0100	n/a	n/a	0.2839
SI(HL)	CLK&!D&RN&!SE&!SETN	0.0100	n/a	n/a	0.0202
SI(HL)	CLK&!D&RN&SE&!SETN	0.0100	n/a	n/a	0.0219
SI(HL)	CLK&D&RN&!SE&!SETN	0.0100	n/a	n/a	0.0202
SI(HL)	CLK&D&RN&SE&!SETN	0.0100	n/a	n/a	0.0221
SI(HL)	CLK&D&RN&!SE&SETN	0.0100	n/a	n/a	0.0202
SI(HL)	CLK&D&RN&SE&SETN	0.0100	n/a	n/a	0.0727
SI(HL)	!CLK&!D&RN&!SE&SETN	0.0100	n/a	n/a	0.0203
SI(HL)	!CLK&!D&RN&SE&SETN	0.0100	n/a	n/a	0.3908
D(LH)	!CLK&!RN&!SE&!SETN&!SI	0.0100	n/a	n/a	0.0688
D(LH)	!CLK&!RN&!SE&!SETN&SI	0.0100	n/a	n/a	0.0688
D(LH)	!CLK&!RN&!SE&SETN&!SI	0.0100	n/a	n/a	0.2130
D(LH)	!CLK&!RN&!SE&SETN&SI	0.0100	n/a	n/a	0.2130
D(LH)	!CLK&!RN&SE&!SETN&!SI	0.0100	n/a	n/a	-0.0186
D(LH)	!CLK&!RN&SE&!SETN&SI	0.0100	n/a	n/a	-0.0064
D(LH)	!CLK&!RN&SE&SETN&!SI	0.0100	n/a	n/a	-0.0186
D(LH)	!CLK&!RN&SE&SETN&SI	0.0100	n/a	n/a	-0.0064
D(LH)	CLK&!RN&!SE&!SETN&!SI	0.0100	n/a	n/a	-0.0155
D(LH)	CLK&!RN&!SE&!SETN&SI	0.0100	n/a	n/a	-0.0155
D(LH)	CLK&!RN&!SE&SETN&!SI	0.0100	n/a	n/a	-0.0155
D(LH)	CLK&!RN&!SE&SETN&SI	0.0100	n/a	n/a	-0.0154
D(LH)	CLK&!RN&SE&!SETN&!SI	0.0100	n/a	n/a	-0.0197
D(LH)	CLK&!RN&SE&!SETN&SI	0.0100	n/a	n/a	-0.0122
D(LH)	CLK&!RN&SE&SETN&!SI	0.0100	n/a	n/a	-0.0197
D(LH)	CLK&!RN&SE&SETN&SI	0.0100	n/a	n/a	-0.0122
D(LH)	!CLK&RN&!SE&SETN&!SI	0.0100	n/a	n/a	0.2194
D(LH)	!CLK&RN&SE&SETN&!SI	0.0100	n/a	n/a	-0.0186
D(LH)	!CLK&RN&!SE&SETN&SI	0.0100	n/a	n/a	0.2194
D(LH)	!CLK&RN&SE&SETN&SI	0.0100	n/a	n/a	-0.0064
D(LH)	CLK&RN&!SE&SETN&!SI	0.0100	n/a	n/a	-0.0155
D(LH)	CLK&RN&SE&SETN&!SI	0.0100	n/a	n/a	-0.0197
D(LH)	!CLK&RN&!SE&!SETN&!SI	0.0100	n/a	n/a	0.0688
D(LH)	!CLK&RN&!SE&!SETN&SI	0.0100	n/a	n/a	0.0689
D(LH)	!CLK&RN&SE&!SETN&!SI	0.0100	n/a	n/a	-0.0186
D(LH)	!CLK&RN&SE&!SETN&SI	0.0100	n/a	n/a	-0.0064
D(LH)	CLK&RN&!SE&!SETN&!SI	0.0100	n/a	n/a	-0.0149
D(LH)	CLK&RN&!SE&!SETN&SI	0.0100	n/a	n/a	-0.0149
D(LH)	CLK&RN&SE&!SETN&!SI	0.0100	n/a	n/a	-0.0197
D(LH)	CLK&RN&SE&!SETN&SI	0.0100	n/a	n/a	-0.0124
D(LH)	CLK&RN&!SE&SETN&SI	0.0100	n/a	n/a	-0.0154
D(LH)	CLK&RN&SE&SETN&SI	0.0100	n/a	n/a	-0.0066
RN(HL)	!CLK&!D&!SE&SETN&!SI	0.0100	n/a	n/a	0.0615
RN(HL)	!CLK&D&SE&SETN&!SI	0.0100	n/a	n/a	0.0615
RN(HL)	!CLK&D&!SE&SETN&SI	0.0100	n/a	n/a	0.0600
RN(HL)	!CLK&D&SE&SETN&SI	0.0100	n/a	n/a	0.0600
RN(HL)	CLK&D&!SE&SETN&!SI	0.0100	n/a	n/a	0.0627
RN(HL)	CLK&D&SE&SETN&!SI	0.0100	n/a	n/a	0.0628
RN(HL)	CLK&D&!SE&SETN&SI	0.0100	n/a	n/a	0.0627
RN(HL)	CLK&D&SE&SETN&SI	0.0100	n/a	n/a	0.0627
RN(HL)	!CLK&!D&SE&SETN&!SI	0.0100	n/a	n/a	0.0615
RN(HL)	!CLK&!D&!SE&SETN&SI	0.0100	n/a	n/a	0.0615
RN(HL)	!CLK&!D&SE&SETN&SI	0.0100	n/a	n/a	0.0600

continues on next page

Table 138 – continued from previous page

RN(HL)	CLK&!D&!SE&SETN&!SI	0.0100	n/a	n/a	0.0629
RN(HL)	CLK&!D&SE&SETN&!SI	0.0100	n/a	n/a	0.0628
RN(HL)	CLK&!D&!SE&SETN&SI	0.0100	n/a	n/a	0.0629
RN(HL)	CLK&!D&SE&SETN&SI	0.0100	n/a	n/a	0.0628
RN(HL)	!CLK&D&!SE&SETN&!SI	0.0100	n/a	n/a	0.0600
RN(LH)	!CLK&!D&!SE&SETN&!SI	0.0100	n/a	n/a	-0.0593
RN(LH)	!CLK&!D&!SE&SETN&SI	0.0100	n/a	n/a	-0.0593
RN(LH)	!CLK&!D&SE&SETN&!SI	0.0100	n/a	n/a	-0.0593
RN(LH)	!CLK&!D&SE&SETN&SI	0.0100	n/a	n/a	-0.0557
RN(LH)	!CLK&D&!SE&SETN&!SI	0.0100	n/a	n/a	-0.0557
RN(LH)	!CLK&D&!SE&SETN&SI	0.0100	n/a	n/a	-0.0557
RN(LH)	!CLK&D&SE&SETN&!SI	0.0100	n/a	n/a	-0.0593
RN(LH)	!CLK&D&SE&SETN&SI	0.0100	n/a	n/a	-0.0557
RN(LH)	CLK&!D&!SE&SETN&!SI	0.0100	n/a	n/a	-0.0593
RN(LH)	CLK&!D&!SE&SETN&SI	0.0100	n/a	n/a	-0.0593
RN(LH)	CLK&!D&SE&SETN&!SI	0.0100	n/a	n/a	-0.0593
RN(LH)	CLK&!D&SE&SETN&SI	0.0100	n/a	n/a	-0.0593
RN(LH)	CLK&D&!SE&SETN&!SI	0.0100	n/a	n/a	-0.0593
RN(LH)	CLK&D&!SE&SETN&SI	0.0100	n/a	n/a	-0.0593
RN(LH)	CLK&D&SE&SETN&!SI	0.0100	n/a	n/a	-0.0593
RN(LH)	CLK&D&SE&SETN&SI	0.0100	n/a	n/a	-0.0593
SETN(LH)	!CLK&!D&!RN&!SE&!SI	0.0100	n/a	n/a	0.1436
SETN(LH)	!CLK&!D&!RN&!SE&SI	0.0100	n/a	n/a	0.1436
SETN(LH)	!CLK&!D&!RN&SE&!SI	0.0100	n/a	n/a	0.1436
SETN(LH)	!CLK&!D&!RN&SE&SI	0.0100	n/a	n/a	0.0794
SETN(LH)	!CLK&D&!RN&!SE&!SI	0.0100	n/a	n/a	0.0794
SETN(LH)	!CLK&D&!RN&!SE&SI	0.0100	n/a	n/a	0.0794
SETN(LH)	!CLK&D&!RN&SE&!SI	0.0100	n/a	n/a	0.1436
SETN(LH)	!CLK&D&!RN&SE&SI	0.0100	n/a	n/a	0.0794
SETN(LH)	CLK&!D&!RN&!SE&!SI	0.0100	n/a	n/a	0.1372
SETN(LH)	CLK&!D&!RN&!SE&SI	0.0100	n/a	n/a	0.1372
SETN(LH)	CLK&!D&!RN&SE&!SI	0.0100	n/a	n/a	0.1372
SETN(LH)	CLK&!D&!RN&SE&SI	0.0100	n/a	n/a	0.1372
SETN(LH)	CLK&D&!RN&!SE&!SI	0.0100	n/a	n/a	0.1372
SETN(LH)	CLK&D&!RN&!SE&SI	0.0100	n/a	n/a	0.1372
SETN(LH)	CLK&D&!RN&SE&!SI	0.0100	n/a	n/a	0.1372
SETN(LH)	CLK&D&!RN&SE&SI	0.0100	n/a	n/a	0.1372
SETN(LH)	!CLK&!D&RN&!SE&!SI	0.0100	n/a	n/a	0.0253
SETN(LH)	!CLK&!D&RN&!SE&SI	0.0100	n/a	n/a	0.0253
SETN(LH)	!CLK&!D&RN&SE&!SI	0.0100	n/a	n/a	0.0253
SETN(LH)	!CLK&!D&RN&SE&SI	0.0100	n/a	n/a	-0.0307
SETN(LH)	!CLK&D&RN&!SE&!SI	0.0100	n/a	n/a	-0.0307
SETN(LH)	!CLK&D&RN&!SE&SI	0.0100	n/a	n/a	-0.0307
SETN(LH)	!CLK&D&RN&SE&!SI	0.0100	n/a	n/a	0.0253
SETN(LH)	!CLK&D&RN&SE&SI	0.0100	n/a	n/a	-0.0307
SETN(LH)	CLK&!D&RN&!SE&!SI	0.0100	n/a	n/a	-0.0307
SETN(LH)	CLK&!D&RN&!SE&SI	0.0100	n/a	n/a	-0.0307
SETN(LH)	CLK&!D&RN&SE&!SI	0.0100	n/a	n/a	-0.0307
SETN(LH)	CLK&!D&RN&SE&SI	0.0100	n/a	n/a	-0.0307
SETN(LH)	CLK&D&RN&!SE&!SI	0.0100	n/a	n/a	-0.0307
SETN(LH)	CLK&D&RN&!SE&SI	0.0100	n/a	n/a	-0.0307
SETN(LH)	CLK&D&RN&SE&!SI	0.0100	n/a	n/a	-0.0307

continues on next page

Table 138 – continued from previous page

SETN(LH)	CLK&D&RN&SE&SI	0.0100	n/a	n/a	-0.0307

LEAKAGE POWER

When Condition	Power (nW)
!CLK&!D&!RN&!SE&!SETN&!SI	0.5185
!CLK&!D&!RN&!SE&!SETN&SI	0.5207
!CLK&!D&!RN&!SE&SETN&!SI	0.5282
!CLK&!D&!RN&!SE&SETN&SI	0.5302
!CLK&!D&!RN&SE&!SETN&!SI	0.5570
!CLK&!D&!RN&SE&!SETN&SI	0.5792
!CLK&!D&!RN&SE&SETN&!SI	0.5666
!CLK&!D&!RN&SE&SETN&SI	0.6080
!CLK&D&!RN&!SE&!SETN&!SI	0.5095
!CLK&D&!RN&!SE&!SETN&SI	0.5095
!CLK&D&!RN&!SE&SETN&!SI	0.5383
!CLK&D&!RN&!SE&SETN&SI	0.5383
!CLK&D&!RN&SE&!SETN&!SI	0.5984
!CLK&D&!RN&SE&!SETN&SI	0.5436
!CLK&D&!RN&SE&SETN&!SI	0.6081
!CLK&D&!RN&SE&SETN&SI	0.5725
CLK&!D&!RN&!SE&!SETN&!SI	0.5383
CLK&!D&!RN&!SE&!SETN&SI	0.5383
CLK&!D&!RN&!SE&SETN&!SI	0.5068
CLK&!D&!RN&!SE&SETN&SI	0.5068
CLK&!D&!RN&SE&!SETN&!SI	0.5370
CLK&!D&!RN&SE&!SETN&SI	0.5403
CLK&!D&!RN&SE&SETN&!SI	0.5055
CLK&!D&!RN&SE&SETN&SI	0.5088
CLK&D&!RN&!SE&!SETN&!SI	0.5417
CLK&D&!RN&!SE&!SETN&SI	0.5417
CLK&D&!RN&!SE&SETN&!SI	0.5102
CLK&D&!RN&!SE&SETN&SI	0.5102
CLK&D&!RN&SE&!SETN&!SI	0.5371
CLK&D&!RN&SE&!SETN&SI	0.5403
CLK&D&!RN&SE&SETN&!SI	0.5056
CLK&D&!RN&SE&SETN&SI	0.5088
!CLK&!D&RN&!SE&SETN&!SI	0.6703
!CLK&!D&RN&!SE&SETN&SI	0.6718
!CLK&!D&RN&SE&SETN&!SI	0.7088
!CLK&!D&RN&SE&SETN&SI	0.7085
!CLK&D&RN&!SE&SETN&!SI	0.6389
!CLK&D&RN&!SE&SETN&SI	0.6389
!CLK&D&RN&SE&SETN&!SI	0.7502
!CLK&D&RN&SE&SETN&SI	0.6730
CLK&!D&RN&!SE&SETN&!SI	0.5309
CLK&!D&RN&!SE&SETN&SI	0.5309

continues on next page

Table 139 – continued from previous page

CLK&!D&RN&SE&SETN&!SI	0.5294
CLK&D&RN&SE&SETN&!SI	0.5294
!CLK&!D&RN&!SE&!SETN&!SI	0.5022
!CLK&!D&RN&!SE&!SETN&SI	0.5037
!CLK&!D&RN&SE&!SETN&!SI	0.5407
!CLK&!D&RN&SE&!SETN&SI	0.5611
!CLK&D&RN&!SE&!SETN&!SI	0.4914
!CLK&D&RN&!SE&!SETN&SI	0.4914
!CLK&D&RN&SE&!SETN&!SI	0.5821
!CLK&D&RN&SE&!SETN&SI	0.5255
CLK&!D&RN&!SE&!SETN&!SI	0.4917
CLK&!D&RN&!SE&!SETN&SI	0.4917
CLK&!D&RN&SE&!SETN&!SI	0.4903
CLK&!D&RN&SE&!SETN&SI	0.4919
CLK&D&RN&!SE&!SETN&!SI	0.4934
CLK&D&RN&!SE&!SETN&SI	0.4934
CLK&D&RN&SE&!SETN&!SI	0.4903
CLK&D&RN&SE&!SETN&SI	0.4920
CLK&!D&RN&SE&SETN&SI	0.7829
CLK&D&RN&!SE&SETN&!SI	0.7456
CLK&D&RN&!SE&SETN&SI	0.7456
CLK&D&RN&SE&SETN&SI	0.7647

gf180mcu_fd_sc_mcu7t5v0__sdffrsnq_4

gf180mcu_fd_sc_mcu7t5v0__sdffrsnq_4 symbol

SDFFRSNQ_X4_7T5P0

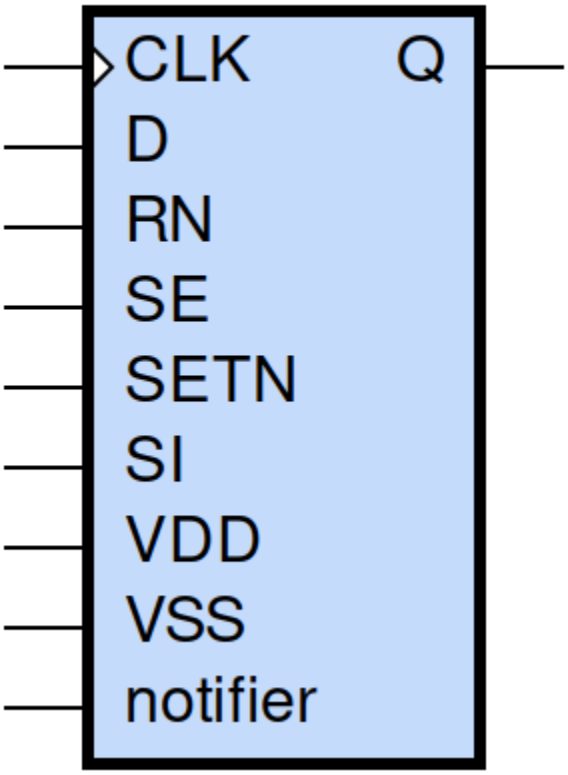

gf180mcu_fd_sc_mcu7t5v0__sdffrsnq_4 schematic

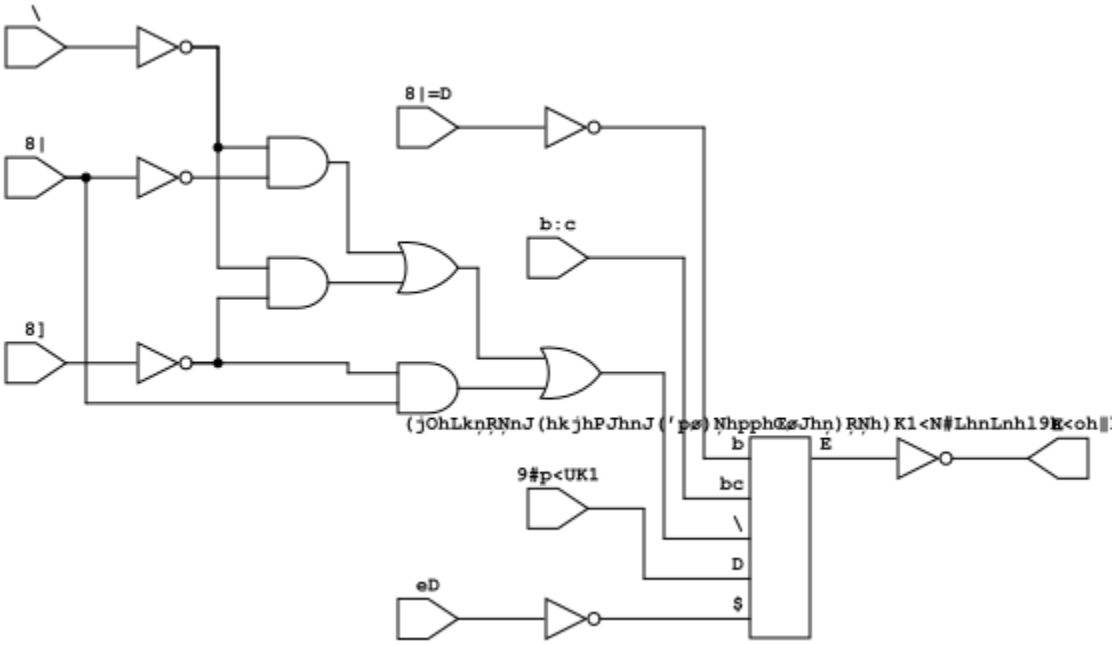

gf180mcu_fd_sc_mcu7t5v0__sdffrsnq_4 layout

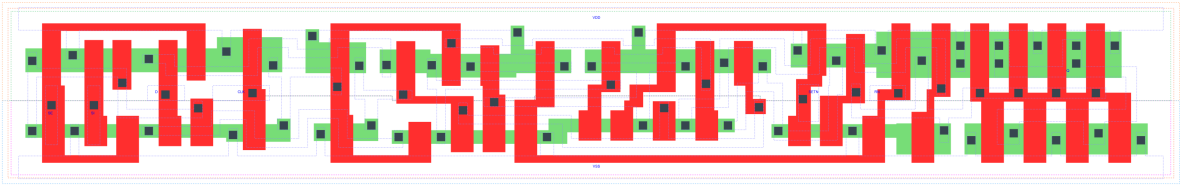

SDFFRSNQ_X4 is a positive edge triggered scan D-type flip flop, active low set/reset, 4X drive strength

Attributes

Attribute	Value
area	118.540800 μm^2

TRUTH TABLE

Input						Output
RN	SETN	SE	SI	D	CLK	Q
H	H	L	X	L	↑	L
H	H	L	X	H	↑	H
H	H	H	L	X	↑	L
H	H	H	H	X	↑	H
H	L	X	X	X	X	H
L	H	X	X	X	X	L
L	L	X	X	X	X	L

FUNCTIONAL SCHEMATIC

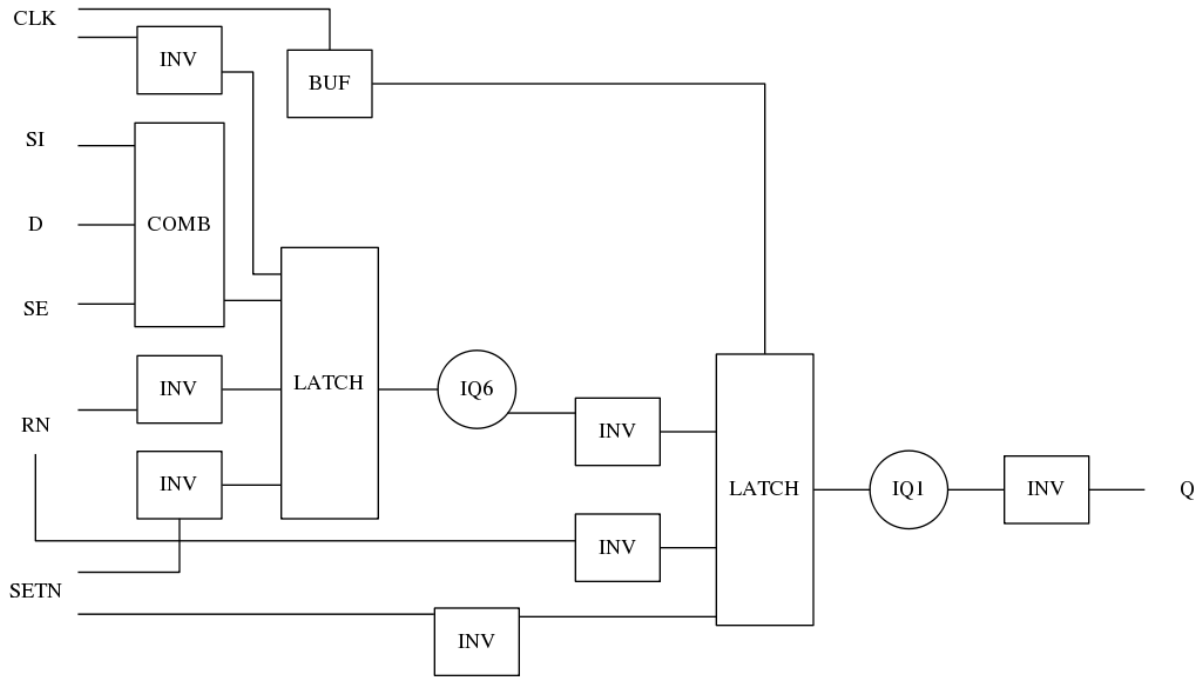

CONSTRAINTS

Constraint Pin	Related Pin	setup(ns)	hold(ns)
SE(LH)	CLK(LH)	0.6010	-0.2350
SE(LH)	CLK(LH)	0.8130	-0.0800
SE(HL)	CLK(LH)	0.6980	-0.0460
SE(HL)	CLK(LH)	0.6810	-0.3440
SI(HL)	CLK(LH)	0.7790	-0.0800
SI(HL)	CLK(LH)	0.7790	-0.0460
SI(LH)	CLK(LH)	0.6470	-0.2810
SI(LH)	CLK(LH)	0.6300	-0.2750
D(HL)	CLK(LH)	0.6870	-0.0340
D(HL)	CLK(LH)	0.6870	-0.0340
D(LH)	CLK(LH)	0.5670	-0.2290
D(LH)	CLK(LH)	0.5670	-0.2290
SETN(LH)	RN(LH)	-0.0860	0.1950
SETN(LH)	RN(LH)	-0.0860	0.1950
SETN(LH)	RN(LH)	-0.0860	0.1950
SETN(LH)	RN(LH)	-0.0860	0.1950
SETN(LH)	RN(LH)	-0.0290	0.1490
SETN(LH)	RN(LH)	-0.0290	0.1490
SETN(LH)	RN(LH)	-0.0290	0.1490
SETN(LH)	RN(LH)	-0.0290	0.1490
SETN(LH)	RN(LH)	-0.0860	0.1950
SETN(LH)	RN(LH)	-0.0860	0.1950
SETN(LH)	RN(LH)	-0.0860	0.1950
SETN(LH)	RN(LH)	-0.0290	0.1490

continues on next page

Table 140 – continued from previous page

SETN(LH)	RN(LH)	-0.0290	0.1490
SETN(LH)	RN(LH)	-0.0290	0.1490
SETN(LH)	RN(LH)	-0.0290	0.1490
SETN(LH)	RN(LH)	-0.0860	0.1950
RN(LH)	SETN(LH)	0.1950	-0.0860
RN(LH)	SETN(LH)	0.1950	-0.0860
RN(LH)	SETN(LH)	0.1950	-0.0860
RN(LH)	SETN(LH)	0.1950	-0.0860
RN(LH)	SETN(LH)	0.1490	-0.0290
RN(LH)	SETN(LH)	0.1490	-0.0290
RN(LH)	SETN(LH)	0.1490	-0.0290
RN(LH)	SETN(LH)	0.1490	-0.0290
RN(LH)	SETN(LH)	0.1950	-0.0860
RN(LH)	SETN(LH)	0.1950	-0.0860
RN(LH)	SETN(LH)	0.1950	-0.0860
RN(LH)	SETN(LH)	0.1490	-0.0290
RN(LH)	SETN(LH)	0.1490	-0.0290
RN(LH)	SETN(LH)	0.1490	-0.0290
RN(LH)	SETN(LH)	0.1490	-0.0290
RN(LH)	SETN(LH)	0.1950	-0.0860

Constraint Pin	Related Pin	recovery(ns)	removal(ns)
SETN(LH)	CLK(LH)	0.0000	0.2860
SETN(LH)	CLK(LH)	0.0000	0.2860
SETN(LH)	CLK(LH)	0.0000	0.2860
SETN(LH)	CLK(LH)	0.0000	0.2860
RN(LH)	CLK(LH)	-0.2400	0.4060
RN(LH)	CLK(LH)	-0.2400	0.4060
RN(LH)	CLK(LH)	-0.2400	0.4060
RN(LH)	CLK(LH)	-0.2400	0.4060

Constraint Pin	Related Pin	Minimum Pulse Width(ns)
CLK(HLH)	CLK(HL)	0.8270
CLK(HLH)	CLK(HL)	0.8520
CLK(HLH)	CLK(HL)	0.8330
CLK(HLH)	CLK(HL)	0.7110
CLK(HLH)	CLK(HL)	0.6380
CLK(HLH)	CLK(HL)	0.9130
CLK(HLH)	CLK(HL)	0.6380
CLK(HLH)	CLK(HL)	0.6750
CLK(LHL)	CLK(LH)	0.5730

continues on next page

Table 141 – continued from previous page

CLK(LHL)	CLK(LH)	0.5730
CLK(LHL)	CLK(LH)	0.5730
CLK(LHL)	CLK(LH)	0.6510
CLK(LHL)	CLK(LH)	0.6510
CLK(LHL)	CLK(LH)	0.5730
CLK(LHL)	CLK(LH)	0.6510
CLK(LHL)	CLK(LH)	0.6510
SETN(HLH)	SETN(HL)	0.5930
SETN(HLH)	SETN(HL)	0.5930
SETN(HLH)	SETN(HL)	0.5930
SETN(HLH)	SETN(HL)	0.5930
SETN(HLH)	SETN(HL)	0.5240
SETN(HLH)	SETN(HL)	0.5240
SETN(HLH)	SETN(HL)	0.5240
SETN(HLH)	SETN(HL)	0.5240
SETN(HLH)	SETN(HL)	0.5930
SETN(HLH)	SETN(HL)	0.5930
SETN(HLH)	SETN(HL)	0.5930
SETN(HLH)	SETN(HL)	0.5240
SETN(HLH)	SETN(HL)	0.5240
SETN(HLH)	SETN(HL)	0.5240
SETN(HLH)	SETN(HL)	0.5240
SETN(HLH)	SETN(HL)	0.5930
RN(HLH)	RN(HL)	0.3780
RN(HLH)	RN(HL)	0.3780
RN(HLH)	RN(HL)	0.3780
RN(HLH)	RN(HL)	0.3780
RN(HLH)	RN(HL)	0.4760
RN(HLH)	RN(HL)	0.4760
RN(HLH)	RN(HL)	0.4760
RN(HLH)	RN(HL)	0.4760
RN(HLH)	RN(HL)	0.3780
RN(HLH)	RN(HL)	0.3780
RN(HLH)	RN(HL)	0.3780
RN(HLH)	RN(HL)	0.4760
RN(HLH)	RN(HL)	0.4760
RN(HLH)	RN(HL)	0.4760
RN(HLH)	RN(HL)	0.4760
RN(HLH)	RN(HL)	0.3780

PIN CAPACITANCE (pf)

Pin	Type	Capacitance (pf)
SE	input	0.0061
SI	input	0.0027
D	input	0.0027
CLK	input	0.0036
SETN	input	0.0063
RN	input	0.0077

DELAY AND OUTPUT TRANSITION TIME corresponding to min slew and load

Input Pin	Output	When Condition	Tin (ns)	Out Load (pf)	Delay (ns)	Tout (ns)
CLK(LH)	Q(HL)	!D&RN&!SE&SETN&!SI	0.0100	0.0010	0.8287	0.0505
CLK(LH)	Q(HL)	!D&RN&!SE&SETN&SI	0.0100	0.0010	0.8285	0.0506
CLK(LH)	Q(HL)	!D&RN&SE&SETN&!SI	0.0100	0.0010	0.8288	0.0505
CLK(LH)	Q(HL)	D&RN&SE&SETN&!SI	0.0100	0.0010	0.8285	0.0506
CLK(LH)	Q(LH)	!D&RN&SE&SETN&SI	0.0100	0.0010	0.9494	0.0657
CLK(LH)	Q(LH)	D&RN&!SE&SETN&!SI	0.0100	0.0010	0.9494	0.0657
CLK(LH)	Q(LH)	D&RN&!SE&SETN&SI	0.0100	0.0010	0.9493	0.0658
CLK(LH)	Q(LH)	D&RN&SE&SETN&SI	0.0100	0.0010	0.9494	0.0657
SETN(HL)	Q(LH)	!CLK&!D&RN&!SE&!SI	0.0100	0.0010	0.8269	0.0656
SETN(HL)	Q(LH)	!CLK&D&RN&SE&!SI	0.0100	0.0010	0.8269	0.0656
SETN(HL)	Q(LH)	!CLK&D&RN&!SE&SI	0.0100	0.0010	0.8269	0.0662
SETN(HL)	Q(LH)	!CLK&D&RN&SE&SI	0.0100	0.0010	0.8269	0.0662
SETN(HL)	Q(LH)	CLK&D&RN&!SE&!SI	0.0100	0.0010	0.8704	0.0656
SETN(HL)	Q(LH)	CLK&D&RN&SE&!SI	0.0100	0.0010	0.8702	0.0658
SETN(HL)	Q(LH)	CLK&D&RN&!SE&SI	0.0100	0.0010	0.8704	0.0656
SETN(HL)	Q(LH)	CLK&D&RN&SE&SI	0.0100	0.0010	0.8704	0.0656
SETN(HL)	Q(LH)	!CLK&!D&RN&SE&!SI	0.0100	0.0010	0.8269	0.0656
SETN(HL)	Q(LH)	!CLK&!D&RN&!SE&SI	0.0100	0.0010	0.8269	0.0656
SETN(HL)	Q(LH)	!CLK&!D&RN&SE&SI	0.0100	0.0010	0.8269	0.0662
SETN(HL)	Q(LH)	CLK&!D&RN&!SE&!SI	0.0100	0.0010	0.8704	0.0656
SETN(HL)	Q(LH)	CLK&!D&RN&SE&!SI	0.0100	0.0010	0.8702	0.0658
SETN(HL)	Q(LH)	CLK&!D&RN&!SE&SI	0.0100	0.0010	0.8704	0.0656
SETN(HL)	Q(LH)	CLK&!D&RN&SE&SI	0.0100	0.0010	0.8704	0.0656
SETN(HL)	Q(LH)	!CLK&D&RN&!SE&!SI	0.0100	0.0010	0.8269	0.0662
RN(HL)	Q(HL)	!CLK&!D&!SE&SETN&!SI	0.0100	0.0010	0.2628	0.0475
RN(HL)	Q(HL)	!CLK&D&SE&SETN&!SI	0.0100	0.0010	0.2628	0.0475
RN(HL)	Q(HL)	!CLK&D&!SE&SETN&SI	0.0100	0.0010	0.2628	0.0473
RN(HL)	Q(HL)	!CLK&D&SE&SETN&SI	0.0100	0.0010	0.2628	0.0473
RN(HL)	Q(HL)	CLK&D&!SE&SETN&!SI	0.0100	0.0010	0.2626	0.0471
RN(HL)	Q(HL)	CLK&D&SE&SETN&!SI	0.0100	0.0010	0.2626	0.0473
RN(HL)	Q(HL)	CLK&D&!SE&SETN&SI	0.0100	0.0010	0.2626	0.0471
RN(HL)	Q(HL)	CLK&D&SE&SETN&SI	0.0100	0.0010	0.2626	0.0471
RN(HL)	Q(HL)	!CLK&!D&!SE&!SETN&!SI	0.0100	0.0010	0.2622	0.0472
RN(HL)	Q(HL)	!CLK&!D&!SE&!SETN&SI	0.0100	0.0010	0.2622	0.0472
RN(HL)	Q(HL)	!CLK&!D&SE&!SETN&!SI	0.0100	0.0010	0.2623	0.0470
RN(HL)	Q(HL)	!CLK&!D&SE&!SETN&SI	0.0100	0.0010	0.2623	0.0470

continues on next page

Table 142 – continued from previous page

RN(HL)	Q(HL)	!CLK&D&!SE&!SETN&!SI	0.0100	0.0010	0.2622	0.0472
RN(HL)	Q(HL)	!CLK&D&!SE&!SETN&SI	0.0100	0.0010	0.2623	0.0470
RN(HL)	Q(HL)	!CLK&D&SE&!SETN&!SI	0.0100	0.0010	0.2623	0.0470
RN(HL)	Q(HL)	!CLK&D&SE&!SETN&SI	0.0100	0.0010	0.2623	0.0470
RN(HL)	Q(HL)	CLK&!D&!SE&!SETN&!SI	0.0100	0.0010	0.2624	0.0468
RN(HL)	Q(HL)	CLK&!D&!SE&!SETN&SI	0.0100	0.0010	0.2625	0.0468
RN(HL)	Q(HL)	CLK&!D&SE&!SETN&!SI	0.0100	0.0010	0.2625	0.0468
RN(HL)	Q(HL)	CLK&!D&SE&!SETN&SI	0.0100	0.0010	0.2625	0.0468
RN(HL)	Q(HL)	CLK&D&!SE&!SETN&!SI	0.0100	0.0010	0.2625	0.0468
RN(HL)	Q(HL)	CLK&D&!SE&!SETN&SI	0.0100	0.0010	0.2625	0.0468
RN(HL)	Q(HL)	CLK&D&SE&!SETN&!SI	0.0100	0.0010	0.2625	0.0468
RN(HL)	Q(HL)	CLK&D&SE&!SETN&SI	0.0100	0.0010	0.2625	0.0468
RN(HL)	Q(HL)	!CLK&!D&SE&SETN&!SI	0.0100	0.0010	0.2628	0.0476
RN(HL)	Q(HL)	!CLK&!D&!SE&SETN&SI	0.0100	0.0010	0.2628	0.0475
RN(HL)	Q(HL)	!CLK&!D&SE&SETN&SI	0.0100	0.0010	0.2628	0.0473
RN(HL)	Q(HL)	CLK&!D&!SE&SETN&!SI	0.0100	0.0010	0.2626	0.0472
RN(HL)	Q(HL)	CLK&!D&SE&SETN&!SI	0.0100	0.0010	0.2626	0.0473
RN(HL)	Q(HL)	CLK&!D&!SE&SETN&SI	0.0100	0.0010	0.2627	0.0471
RN(HL)	Q(HL)	CLK&!D&SE&SETN&SI	0.0100	0.0010	0.2626	0.0471
RN(HL)	Q(HL)	!CLK&D&!SE&SETN&!SI	0.0100	0.0010	0.2628	0.0473
RN(LH)	Q(LH)	!CLK&!D&!SE&!SETN&!SI	0.0100	0.0010	0.4702	0.0645
RN(LH)	Q(LH)	!CLK&!D&!SE&!SETN&SI	0.0100	0.0010	0.4702	0.0645
RN(LH)	Q(LH)	!CLK&!D&SE&!SETN&!SI	0.0100	0.0010	0.4702	0.0645
RN(LH)	Q(LH)	!CLK&!D&SE&!SETN&SI	0.0100	0.0010	0.4700	0.0650
RN(LH)	Q(LH)	!CLK&D&!SE&!SETN&!SI	0.0100	0.0010	0.4700	0.0650
RN(LH)	Q(LH)	!CLK&D&!SE&!SETN&SI	0.0100	0.0010	0.4700	0.0650
RN(LH)	Q(LH)	!CLK&D&SE&!SETN&!SI	0.0100	0.0010	0.4702	0.0645
RN(LH)	Q(LH)	!CLK&D&SE&!SETN&SI	0.0100	0.0010	0.4700	0.0650
RN(LH)	Q(LH)	CLK&!D&!SE&!SETN&!SI	0.0100	0.0010	0.4723	0.0645
RN(LH)	Q(LH)	CLK&!D&!SE&!SETN&SI	0.0100	0.0010	0.4723	0.0645
RN(LH)	Q(LH)	CLK&!D&SE&!SETN&!SI	0.0100	0.0010	0.4723	0.0646
RN(LH)	Q(LH)	CLK&!D&SE&!SETN&SI	0.0100	0.0010	0.4723	0.0646
RN(LH)	Q(LH)	CLK&D&!SE&!SETN&!SI	0.0100	0.0010	0.4723	0.0645
RN(LH)	Q(LH)	CLK&D&!SE&!SETN&SI	0.0100	0.0010	0.4723	0.0645
RN(LH)	Q(LH)	CLK&D&SE&!SETN&!SI	0.0100	0.0010	0.4723	0.0646
RN(LH)	Q(LH)	CLK&D&SE&!SETN&SI	0.0100	0.0010	0.4723	0.0646

DYNAMIC ENERGY

Input Pin	When Condition	Tin (ns)	Output	Out Load (pf)	Energy (uW/MHz)
CLK	!D&RN&!SE&SETN&!SI	0.0100	Q(HL)	0.0010	1.1893
CLK	!D&RN&!SE&SETN&SI	0.0100	Q(HL)	0.0010	1.1897
CLK	!D&RN&SE&SETN&!SI	0.0100	Q(HL)	0.0010	1.1895
CLK	D&RN&SE&SETN&!SI	0.0100	Q(HL)	0.0010	1.1896
CLK	!D&RN&SE&SETN&SI	0.0100	Q(LH)	0.0010	1.4224
CLK	D&RN&!SE&SETN&!SI	0.0100	Q(LH)	0.0010	1.4221
CLK	D&RN&!SE&SETN&SI	0.0100	Q(LH)	0.0010	1.4221

continues on next page

Table 143 – continued from previous page

CLK	D&RN&SE&SETN&SI	0.0100	Q(LH)	0.0010	1.4225
SETN	!CLK&!D&RN&!SE&!SI	0.0100	Q(LH)	0.0010	1.2619
SETN	!CLK&D&RN&SE&!SI	0.0100	Q(LH)	0.0010	1.2622
SETN	!CLK&D&RN&!SE&SI	0.0100	Q(LH)	0.0010	1.1483
SETN	!CLK&D&RN&SE&SI	0.0100	Q(LH)	0.0010	1.1483
SETN	CLK&D&RN&!SE&!SI	0.0100	Q(LH)	0.0010	1.3579
SETN	CLK&D&RN&SE&!SI	0.0100	Q(LH)	0.0010	1.3574
SETN	CLK&D&RN&!SE&SI	0.0100	Q(LH)	0.0010	1.3579
SETN	CLK&D&RN&SE&SI	0.0100	Q(LH)	0.0010	1.3578
SETN	!CLK&!D&RN&SE&!SI	0.0100	Q(LH)	0.0010	1.2622
SETN	!CLK&!D&RN&!SE&SI	0.0100	Q(LH)	0.0010	1.2622
SETN	!CLK&!D&RN&SE&SI	0.0100	Q(LH)	0.0010	1.1483
SETN	CLK&!D&RN&!SE&!SI	0.0100	Q(LH)	0.0010	1.3578
SETN	CLK&!D&RN&SE&!SI	0.0100	Q(LH)	0.0010	1.3574
SETN	CLK&!D&RN&!SE&SI	0.0100	Q(LH)	0.0010	1.3578
SETN	CLK&!D&RN&SE&SI	0.0100	Q(LH)	0.0010	1.3578
SETN	!CLK&D&RN&!SE&!SI	0.0100	Q(LH)	0.0010	1.1483
RN	!CLK&!D&!SE&SETN&!SI	0.0100	Q(HL)	0.0010	0.9236
RN	!CLK&D&SE&SETN&!SI	0.0100	Q(HL)	0.0010	0.9236
RN	!CLK&D&!SE&SETN&SI	0.0100	Q(HL)	0.0010	0.9233
RN	!CLK&D&SE&SETN&SI	0.0100	Q(HL)	0.0010	0.9233
RN	CLK&D&!SE&SETN&!SI	0.0100	Q(HL)	0.0010	1.1520
RN	CLK&D&SE&SETN&!SI	0.0100	Q(HL)	0.0010	1.1528
RN	CLK&D&!SE&SETN&SI	0.0100	Q(HL)	0.0010	1.1520
RN	CLK&D&SE&SETN&SI	0.0100	Q(HL)	0.0010	1.1520
RN	!CLK&!D&!SE&!SETN&!SI	0.0100	Q(HL)	0.0010	0.7729
RN	!CLK&!D&!SE&!SETN&SI	0.0100	Q(HL)	0.0010	0.7729
RN	!CLK&!D&SE&!SETN&!SI	0.0100	Q(HL)	0.0010	0.7729
RN	!CLK&!D&SE&!SETN&SI	0.0100	Q(HL)	0.0010	0.7711
RN	!CLK&D&!SE&!SETN&!SI	0.0100	Q(HL)	0.0010	0.7711
RN	!CLK&D&!SE&!SETN&SI	0.0100	Q(HL)	0.0010	0.7711
RN	!CLK&D&SE&!SETN&!SI	0.0100	Q(HL)	0.0010	0.7729
RN	!CLK&D&SE&!SETN&SI	0.0100	Q(HL)	0.0010	0.7711
RN	CLK&!D&!SE&!SETN&!SI	0.0100	Q(HL)	0.0010	0.9176
RN	CLK&!D&!SE&!SETN&SI	0.0100	Q(HL)	0.0010	0.9173
RN	CLK&!D&SE&!SETN&!SI	0.0100	Q(HL)	0.0010	0.9173
RN	CLK&!D&SE&!SETN&SI	0.0100	Q(HL)	0.0010	0.9175
RN	CLK&D&!SE&!SETN&!SI	0.0100	Q(HL)	0.0010	0.9175
RN	CLK&D&!SE&!SETN&SI	0.0100	Q(HL)	0.0010	0.9173
RN	CLK&D&SE&!SETN&!SI	0.0100	Q(HL)	0.0010	0.9173
RN	CLK&D&SE&!SETN&SI	0.0100	Q(HL)	0.0010	0.9175
RN	!CLK&!D&SE&SETN&!SI	0.0100	Q(HL)	0.0010	0.9236
RN	!CLK&!D&!SE&SETN&SI	0.0100	Q(HL)	0.0010	0.9236
RN	!CLK&!D&SE&SETN&SI	0.0100	Q(HL)	0.0010	0.9233
RN	CLK&!D&!SE&SETN&!SI	0.0100	Q(HL)	0.0010	1.1527
RN	CLK&!D&SE&SETN&!SI	0.0100	Q(HL)	0.0010	1.1528
RN	CLK&!D&!SE&SETN&SI	0.0100	Q(HL)	0.0010	1.1526
RN	CLK&!D&SE&SETN&SI	0.0100	Q(HL)	0.0010	1.1520
RN	!CLK&D&!SE&SETN&!SI	0.0100	Q(HL)	0.0010	0.9233
RN	!CLK&!D&!SE&!SETN&!SI	0.0100	Q(LH)	0.0010	0.7774
RN	!CLK&!D&!SE&!SETN&SI	0.0100	Q(LH)	0.0010	0.7774
RN	!CLK&!D&SE&!SETN&!SI	0.0100	Q(LH)	0.0010	0.7774

continues on next page

Table 143 – continued from previous page

RN	!CLK&!D&SE&!SETN&SI	0.0100	Q(LH)	0.0010	0.7783
RN	!CLK&D&!SE&!SETN&!SI	0.0100	Q(LH)	0.0010	0.7783
RN	!CLK&D&!SE&!SETN&SI	0.0100	Q(LH)	0.0010	0.7783
RN	!CLK&D&SE&!SETN&!SI	0.0100	Q(LH)	0.0010	0.7774
RN	!CLK&D&SE&!SETN&SI	0.0100	Q(LH)	0.0010	0.7783
RN	CLK&!D&!SE&!SETN&!SI	0.0100	Q(LH)	0.0010	0.8720
RN	CLK&!D&!SE&!SETN&SI	0.0100	Q(LH)	0.0010	0.8720
RN	CLK&!D&SE&!SETN&!SI	0.0100	Q(LH)	0.0010	0.8720
RN	CLK&!D&SE&!SETN&SI	0.0100	Q(LH)	0.0010	0.8720
RN	CLK&D&!SE&!SETN&!SI	0.0100	Q(LH)	0.0010	0.8720
RN	CLK&D&!SE&!SETN&SI	0.0100	Q(LH)	0.0010	0.8720
RN	CLK&D&SE&!SETN&!SI	0.0100	Q(LH)	0.0010	0.8720
RN	CLK&D&SE&!SETN&SI	0.0100	Q(LH)	0.0010	0.8720
SETN(HL)	!CLK&!D&!RN&!SE&!SI	0.0100	n/a	n/a	0.3783
SETN(HL)	!CLK&!D&!RN&!SE&SI	0.0100	n/a	n/a	0.3783
SETN(HL)	!CLK&!D&!RN&SE&!SI	0.0100	n/a	n/a	0.3783
SETN(HL)	!CLK&!D&!RN&SE&SI	0.0100	n/a	n/a	0.2714
SETN(HL)	!CLK&D&!RN&!SE&!SI	0.0100	n/a	n/a	0.2714
SETN(HL)	!CLK&D&!RN&!SE&SI	0.0100	n/a	n/a	0.2714
SETN(HL)	!CLK&D&!RN&SE&!SI	0.0100	n/a	n/a	0.3783
SETN(HL)	!CLK&D&!RN&SE&SI	0.0100	n/a	n/a	0.2714
SETN(HL)	CLK&!D&!RN&!SE&!SI	0.0100	n/a	n/a	0.3783
SETN(HL)	CLK&!D&!RN&!SE&SI	0.0100	n/a	n/a	0.3783
SETN(HL)	CLK&!D&!RN&SE&!SI	0.0100	n/a	n/a	0.3783
SETN(HL)	CLK&!D&!RN&SE&SI	0.0100	n/a	n/a	0.3783
SETN(HL)	CLK&D&!RN&!SE&!SI	0.0100	n/a	n/a	0.3783
SETN(HL)	CLK&D&!RN&!SE&SI	0.0100	n/a	n/a	0.3783
SETN(HL)	CLK&D&!RN&SE&!SI	0.0100	n/a	n/a	0.3783
SETN(HL)	CLK&D&!RN&SE&SI	0.0100	n/a	n/a	0.3783
SETN(HL)	CLK&!D&RN&!SE&!SI	0.0100	n/a	n/a	0.0444
SETN(HL)	CLK&!D&RN&SE&!SI	0.0100	n/a	n/a	0.0444
SETN(HL)	CLK&!D&RN&!SE&SI	0.0100	n/a	n/a	0.0444
SETN(HL)	CLK&!D&RN&SE&SI	0.0100	n/a	n/a	0.0444
SETN(HL)	!CLK&D&RN&!SE&!SI	0.0100	n/a	n/a	0.0444
SETN(HL)	!CLK&D&RN&SE&!SI	0.0100	n/a	n/a	0.1577
SETN(HL)	!CLK&D&RN&!SE&SI	0.0100	n/a	n/a	0.0444
SETN(HL)	!CLK&D&RN&SE&SI	0.0100	n/a	n/a	0.0444
SETN(HL)	CLK&D&RN&!SE&!SI	0.0100	n/a	n/a	0.0444
SETN(HL)	CLK&D&RN&SE&!SI	0.0100	n/a	n/a	0.0444
SETN(HL)	!CLK&!D&RN&!SE&!SI	0.0100	n/a	n/a	0.1577
SETN(HL)	CLK&D&RN&!SE&SI	0.0100	n/a	n/a	0.0444
SETN(HL)	CLK&D&RN&SE&SI	0.0100	n/a	n/a	0.0444
SETN(HL)	!CLK&!D&RN&SE&!SI	0.0100	n/a	n/a	0.1577
SETN(HL)	!CLK&!D&RN&!SE&SI	0.0100	n/a	n/a	0.1577
SETN(HL)	!CLK&!D&RN&SE&SI	0.0100	n/a	n/a	0.0444
D(HL)	!CLK&!RN&!SE&!SETN&!SI	0.0100	n/a	n/a	0.2351
D(HL)	!CLK&!RN&!SE&!SETN&SI	0.0100	n/a	n/a	0.2351
D(HL)	!CLK&!RN&!SE&SETN&!SI	0.0100	n/a	n/a	0.3488
D(HL)	!CLK&!RN&!SE&SETN&SI	0.0100	n/a	n/a	0.3489
D(HL)	!CLK&!RN&SE&!SETN&!SI	0.0100	n/a	n/a	0.0203
D(HL)	!CLK&!RN&SE&!SETN&SI	0.0100	n/a	n/a	0.0100
D(HL)	!CLK&!RN&SE&SETN&!SI	0.0100	n/a	n/a	0.0203

continues on next page

Table 143 – continued from previous page

D(HL)	!CLK&!RN&SE&SETN&SI	0.0100	n/a	n/a	0.0100
D(HL)	CLK&!RN&!SE&!SETN&!SI	0.0100	n/a	n/a	0.0249
D(HL)	CLK&!RN&!SE&!SETN&SI	0.0100	n/a	n/a	0.0249
D(HL)	CLK&!RN&!SE&SETN&!SI	0.0100	n/a	n/a	0.0249
D(HL)	CLK&!RN&!SE&SETN&SI	0.0100	n/a	n/a	0.0249
D(HL)	CLK&!RN&SE&!SETN&!SI	0.0100	n/a	n/a	0.0236
D(HL)	CLK&!RN&SE&!SETN&SI	0.0100	n/a	n/a	0.0095
D(HL)	CLK&!RN&SE&SETN&!SI	0.0100	n/a	n/a	0.0236
D(HL)	CLK&!RN&SE&SETN&SI	0.0100	n/a	n/a	0.0095
D(HL)	!CLK&RN&!SE&SETN&!SI	0.0100	n/a	n/a	0.3386
D(HL)	!CLK&RN&SE&SETN&!SI	0.0100	n/a	n/a	0.0203
D(HL)	!CLK&RN&!SE&SETN&SI	0.0100	n/a	n/a	0.3386
D(HL)	!CLK&RN&SE&SETN&SI	0.0100	n/a	n/a	0.0100
D(HL)	CLK&RN&!SE&SETN&!SI	0.0100	n/a	n/a	0.0568
D(HL)	CLK&RN&SE&SETN&!SI	0.0100	n/a	n/a	0.0202
D(HL)	!CLK&RN&!SE&!SETN&!SI	0.0100	n/a	n/a	0.2351
D(HL)	!CLK&RN&!SE&!SETN&SI	0.0100	n/a	n/a	0.2351
D(HL)	!CLK&RN&SE&!SETN&!SI	0.0100	n/a	n/a	0.0203
D(HL)	!CLK&RN&SE&!SETN&SI	0.0100	n/a	n/a	0.0100
D(HL)	CLK&RN&!SE&!SETN&!SI	0.0100	n/a	n/a	0.0224
D(HL)	CLK&RN&!SE&!SETN&SI	0.0100	n/a	n/a	0.0224
D(HL)	CLK&RN&SE&!SETN&!SI	0.0100	n/a	n/a	0.0201
D(HL)	CLK&RN&SE&!SETN&SI	0.0100	n/a	n/a	0.0094
D(HL)	CLK&RN&!SE&SETN&SI	0.0100	n/a	n/a	0.0568
D(HL)	CLK&RN&SE&SETN&SI	0.0100	n/a	n/a	0.0092
SE(HL)	!CLK&!D&!RN&!SETN&!SI	0.0100	n/a	n/a	0.1306
SE(HL)	!CLK&!D&!RN&!SETN&SI	0.0100	n/a	n/a	0.3604
SE(HL)	!CLK&!D&!RN&SETN&!SI	0.0100	n/a	n/a	0.1306
SE(HL)	!CLK&!D&!RN&SETN&SI	0.0100	n/a	n/a	0.4740
SE(HL)	!CLK&D&!RN&!SETN&!SI	0.0100	n/a	n/a	0.2203
SE(HL)	!CLK&D&!RN&!SETN&SI	0.0100	n/a	n/a	0.1327
SE(HL)	!CLK&D&!RN&SETN&!SI	0.0100	n/a	n/a	0.3646
SE(HL)	!CLK&D&!RN&SETN&SI	0.0100	n/a	n/a	0.1327
SE(HL)	CLK&!D&!RN&!SETN&!SI	0.0100	n/a	n/a	0.1353
SE(HL)	CLK&!D&!RN&!SETN&SI	0.0100	n/a	n/a	0.1347
SE(HL)	CLK&!D&!RN&SETN&!SI	0.0100	n/a	n/a	0.1353
SE(HL)	CLK&!D&!RN&SETN&SI	0.0100	n/a	n/a	0.1347
SE(HL)	CLK&D&!RN&!SETN&!SI	0.0100	n/a	n/a	0.1344
SE(HL)	CLK&D&!RN&!SETN&SI	0.0100	n/a	n/a	0.1376
SE(HL)	CLK&D&!RN&SETN&!SI	0.0100	n/a	n/a	0.1344
SE(HL)	CLK&D&!RN&SETN&SI	0.0100	n/a	n/a	0.1375
SE(HL)	CLK&!D&RN&SETN&!SI	0.0100	n/a	n/a	0.1306
SE(HL)	CLK&!D&RN&SETN&SI	0.0100	n/a	n/a	0.1824
SE(HL)	!CLK&!D&RN&!SETN&!SI	0.0100	n/a	n/a	0.1306
SE(HL)	!CLK&!D&RN&!SETN&SI	0.0100	n/a	n/a	0.3604
SE(HL)	!CLK&D&RN&!SETN&!SI	0.0100	n/a	n/a	0.2203
SE(HL)	!CLK&D&RN&!SETN&SI	0.0100	n/a	n/a	0.1327
SE(HL)	CLK&!D&RN&!SETN&!SI	0.0100	n/a	n/a	0.1305
SE(HL)	CLK&!D&RN&!SETN&SI	0.0100	n/a	n/a	0.1322
SE(HL)	CLK&D&RN&!SETN&!SI	0.0100	n/a	n/a	0.1343
SE(HL)	CLK&D&RN&!SETN&SI	0.0100	n/a	n/a	0.1389
SE(HL)	!CLK&D&RN&SETN&!SI	0.0100	n/a	n/a	0.3709

continues on next page

Table 143 – continued from previous page

SE(HL)	!CLK&D&RN&SETN&SI	0.0100	n/a	n/a	0.1327
SE(HL)	CLK&D&RN&SETN&!SI	0.0100	n/a	n/a	0.1359
SE(HL)	CLK&D&RN&SETN&SI	0.0100	n/a	n/a	0.1327
SE(HL)	!CLK&!D&RN&SETN&!SI	0.0100	n/a	n/a	0.1306
SE(HL)	!CLK&!D&RN&SETN&SI	0.0100	n/a	n/a	0.4637
SE(LH)	!CLK&!D&!RN&!SETN&!SI	0.0100	n/a	n/a	0.0024
SE(LH)	!CLK&!D&!RN&!SETN&SI	0.0100	n/a	n/a	0.0880
SE(LH)	!CLK&!D&!RN&SETN&!SI	0.0100	n/a	n/a	0.0024
SE(LH)	!CLK&!D&!RN&SETN&SI	0.0100	n/a	n/a	0.2373
SE(LH)	!CLK&D&!RN&!SETN&!SI	0.0100	n/a	n/a	0.2439
SE(LH)	!CLK&D&!RN&!SETN&SI	0.0100	n/a	n/a	-0.0060
SE(LH)	!CLK&D&!RN&SETN&!SI	0.0100	n/a	n/a	0.3687
SE(LH)	!CLK&D&!RN&SETN&SI	0.0100	n/a	n/a	-0.0060
SE(LH)	CLK&!D&!RN&!SETN&!SI	0.0100	n/a	n/a	0.0012
SE(LH)	CLK&!D&!RN&!SETN&SI	0.0100	n/a	n/a	-0.0048
SE(LH)	CLK&!D&!RN&SETN&!SI	0.0100	n/a	n/a	0.0012
SE(LH)	CLK&!D&!RN&SETN&SI	0.0100	n/a	n/a	-0.0048
SE(LH)	CLK&D&!RN&!SETN&!SI	0.0100	n/a	n/a	0.0039
SE(LH)	CLK&D&!RN&!SETN&SI	0.0100	n/a	n/a	-0.0080
SE(LH)	CLK&D&!RN&SETN&!SI	0.0100	n/a	n/a	0.0039
SE(LH)	CLK&D&!RN&SETN&SI	0.0100	n/a	n/a	-0.0080
SE(LH)	CLK&!D&RN&SETN&!SI	0.0100	n/a	n/a	0.0012
SE(LH)	CLK&!D&RN&SETN&SI	0.0100	n/a	n/a	-0.0048
SE(LH)	!CLK&!D&RN&!SETN&!SI	0.0100	n/a	n/a	0.0024
SE(LH)	!CLK&!D&RN&!SETN&SI	0.0100	n/a	n/a	0.0880
SE(LH)	!CLK&D&RN&!SETN&!SI	0.0100	n/a	n/a	0.2439
SE(LH)	!CLK&D&RN&!SETN&SI	0.0100	n/a	n/a	-0.0060
SE(LH)	CLK&!D&RN&!SETN&!SI	0.0100	n/a	n/a	0.0012
SE(LH)	CLK&!D&RN&!SETN&SI	0.0100	n/a	n/a	-0.0048
SE(LH)	CLK&D&RN&!SETN&!SI	0.0100	n/a	n/a	0.0039
SE(LH)	CLK&D&RN&!SETN&SI	0.0100	n/a	n/a	-0.0080
SE(LH)	!CLK&D&RN&SETN&!SI	0.0100	n/a	n/a	0.3580
SE(LH)	!CLK&D&RN&SETN&SI	0.0100	n/a	n/a	-0.0060
SE(LH)	CLK&D&RN&SETN&!SI	0.0100	n/a	n/a	0.0401
SE(LH)	CLK&D&RN&SETN&SI	0.0100	n/a	n/a	-0.0077
SE(LH)	!CLK&!D&RN&SETN&!SI	0.0100	n/a	n/a	0.0024
SE(LH)	!CLK&!D&RN&SETN&SI	0.0100	n/a	n/a	0.2435
CLK(LH)	!D&!RN&!SE&!SETN&!SI	0.0100	n/a	n/a	0.2522
CLK(LH)	!D&!RN&!SE&!SETN&SI	0.0100	n/a	n/a	0.2522
CLK(LH)	!D&!RN&!SE&SETN&!SI	0.0100	n/a	n/a	0.2416
CLK(LH)	!D&!RN&!SE&SETN&SI	0.0100	n/a	n/a	0.2417
CLK(LH)	!D&!RN&SE&!SETN&!SI	0.0100	n/a	n/a	0.2522
CLK(LH)	!D&!RN&SE&!SETN&SI	0.0100	n/a	n/a	0.3562
CLK(LH)	!D&!RN&SE&SETN&!SI	0.0100	n/a	n/a	0.2417
CLK(LH)	!D&!RN&SE&SETN&SI	0.0100	n/a	n/a	0.5021
CLK(LH)	D&!RN&!SE&!SETN&!SI	0.0100	n/a	n/a	0.3561
CLK(LH)	D&!RN&!SE&!SETN&SI	0.0100	n/a	n/a	0.3561
CLK(LH)	D&!RN&!SE&SETN&!SI	0.0100	n/a	n/a	0.5019
CLK(LH)	D&!RN&!SE&SETN&SI	0.0100	n/a	n/a	0.5019
CLK(LH)	D&!RN&SE&!SETN&!SI	0.0100	n/a	n/a	0.2522
CLK(LH)	D&!RN&SE&!SETN&SI	0.0100	n/a	n/a	0.3563
CLK(LH)	D&!RN&SE&SETN&!SI	0.0100	n/a	n/a	0.2417

continues on next page

Table 143 – continued from previous page

CLK(LH)	D&!RN&SE&SETN&SI	0.0100	n/a	n/a	0.5021
CLK(LH)	!D&RN&!SE&SETN&!SI	0.0100	n/a	n/a	0.2415
CLK(LH)	!D&RN&SE&SETN&!SI	0.0100	n/a	n/a	0.2416
CLK(LH)	!D&RN&!SE&SETN&SI	0.0100	n/a	n/a	0.2415
CLK(LH)	!D&RN&SE&SETN&SI	0.0100	n/a	n/a	0.2570
CLK(LH)	D&RN&!SE&SETN&!SI	0.0100	n/a	n/a	0.2569
CLK(LH)	D&RN&SE&SETN&!SI	0.0100	n/a	n/a	0.2416
CLK(LH)	!D&RN&!SE&!SETN&!SI	0.0100	n/a	n/a	0.3179
CLK(LH)	!D&RN&!SE&!SETN&SI	0.0100	n/a	n/a	0.3179
CLK(LH)	!D&RN&SE&!SETN&!SI	0.0100	n/a	n/a	0.3181
CLK(LH)	!D&RN&SE&!SETN&SI	0.0100	n/a	n/a	0.2570
CLK(LH)	D&RN&!SE&!SETN&!SI	0.0100	n/a	n/a	0.2569
CLK(LH)	D&RN&!SE&!SETN&SI	0.0100	n/a	n/a	0.2570
CLK(LH)	D&RN&SE&!SETN&!SI	0.0100	n/a	n/a	0.3179
CLK(LH)	D&RN&SE&!SETN&SI	0.0100	n/a	n/a	0.2570
CLK(LH)	D&RN&!SE&SETN&SI	0.0100	n/a	n/a	0.2569
CLK(LH)	D&RN&SE&SETN&SI	0.0100	n/a	n/a	0.2569
SI(LH)	!CLK&!D&!RN&!SE&!SETN	0.0100	n/a	n/a	-0.0198
SI(LH)	!CLK&!D&!RN&!SE&SETN	0.0100	n/a	n/a	-0.0198
SI(LH)	!CLK&!D&!RN&SE&!SETN	0.0100	n/a	n/a	0.0860
SI(LH)	!CLK&!D&!RN&SE&SETN	0.0100	n/a	n/a	0.2361
SI(LH)	!CLK&D&!RN&!SE&!SETN	0.0100	n/a	n/a	-0.0183
SI(LH)	!CLK&D&!RN&!SE&SETN	0.0100	n/a	n/a	-0.0183
SI(LH)	!CLK&D&!RN&SE&!SETN	0.0100	n/a	n/a	0.0755
SI(LH)	!CLK&D&!RN&SE&SETN	0.0100	n/a	n/a	0.2235
SI(LH)	CLK&!D&!RN&!SE&!SETN	0.0100	n/a	n/a	-0.0198
SI(LH)	CLK&!D&!RN&!SE&SETN	0.0100	n/a	n/a	-0.0198
SI(LH)	CLK&!D&!RN&SE&!SETN	0.0100	n/a	n/a	-0.0158
SI(LH)	CLK&!D&!RN&SE&SETN	0.0100	n/a	n/a	-0.0158
SI(LH)	CLK&D&!RN&!SE&!SETN	0.0100	n/a	n/a	-0.0188
SI(LH)	CLK&D&!RN&!SE&SETN	0.0100	n/a	n/a	-0.0188
SI(LH)	CLK&D&!RN&SE&!SETN	0.0100	n/a	n/a	-0.0158
SI(LH)	CLK&D&!RN&SE&SETN	0.0100	n/a	n/a	-0.0158
SI(LH)	CLK&!D&RN&!SE&SETN	0.0100	n/a	n/a	-0.0198
SI(LH)	CLK&!D&RN&SE&SETN	0.0100	n/a	n/a	-0.0158
SI(LH)	!CLK&D&RN&!SE&SETN	0.0100	n/a	n/a	-0.0183
SI(LH)	!CLK&D&RN&SE&SETN	0.0100	n/a	n/a	0.2298
SI(LH)	!CLK&!D&RN&!SE&!SETN	0.0100	n/a	n/a	-0.0198
SI(LH)	!CLK&!D&RN&SE&!SETN	0.0100	n/a	n/a	0.0860
SI(LH)	!CLK&D&RN&!SE&!SETN	0.0100	n/a	n/a	-0.0183
SI(LH)	!CLK&D&RN&SE&!SETN	0.0100	n/a	n/a	0.0756
SI(LH)	CLK&!D&RN&!SE&!SETN	0.0100	n/a	n/a	-0.0198
SI(LH)	CLK&!D&RN&SE&!SETN	0.0100	n/a	n/a	-0.0158
SI(LH)	CLK&D&RN&!SE&!SETN	0.0100	n/a	n/a	-0.0188
SI(LH)	CLK&D&RN&SE&!SETN	0.0100	n/a	n/a	-0.0158
SI(LH)	CLK&D&RN&!SE&SETN	0.0100	n/a	n/a	-0.0184
SI(LH)	CLK&D&RN&SE&SETN	0.0100	n/a	n/a	-0.0157
SI(LH)	!CLK&!D&RN&!SE&SETN	0.0100	n/a	n/a	-0.0198
SI(LH)	!CLK&!D&RN&SE&SETN	0.0100	n/a	n/a	0.2425
CLK(HL)	!D&!RN&!SE&!SETN&!SI	0.0100	n/a	n/a	0.3777
CLK(HL)	!D&!RN&!SE&!SETN&SI	0.0100	n/a	n/a	0.3777
CLK(HL)	!D&!RN&!SE&SETN&!SI	0.0100	n/a	n/a	0.3734

continues on next page

Table 143 – continued from previous page

CLK(HL)	!D&!RN&!SE&SETN&SI	0.0100	n/a	n/a	0.3735
CLK(HL)	!D&!RN&SE&!SETN&!SI	0.0100	n/a	n/a	0.3957
CLK(HL)	!D&!RN&SE&!SETN&SI	0.0100	n/a	n/a	0.4103
CLK(HL)	!D&!RN&SE&SETN&!SI	0.0100	n/a	n/a	0.3925
CLK(HL)	!D&!RN&SE&SETN&SI	0.0100	n/a	n/a	0.5597
CLK(HL)	D&!RN&!SE&!SETN&!SI	0.0100	n/a	n/a	0.3909
CLK(HL)	D&!RN&!SE&!SETN&SI	0.0100	n/a	n/a	0.3909
CLK(HL)	D&!RN&!SE&SETN&!SI	0.0100	n/a	n/a	0.5318
CLK(HL)	D&!RN&!SE&SETN&SI	0.0100	n/a	n/a	0.5318
CLK(HL)	D&!RN&SE&!SETN&!SI	0.0100	n/a	n/a	0.4138
CLK(HL)	D&!RN&SE&!SETN&SI	0.0100	n/a	n/a	0.4000
CLK(HL)	D&!RN&SE&SETN&!SI	0.0100	n/a	n/a	0.4146
CLK(HL)	D&!RN&SE&SETN&SI	0.0100	n/a	n/a	0.5458
CLK(HL)	!D&RN&!SE&SETN&!SI	0.0100	n/a	n/a	0.3140
CLK(HL)	!D&RN&SE&SETN&!SI	0.0100	n/a	n/a	0.3140
CLK(HL)	!D&RN&!SE&SETN&SI	0.0100	n/a	n/a	0.3140
CLK(HL)	!D&RN&SE&SETN&SI	0.0100	n/a	n/a	0.3136
CLK(HL)	D&RN&!SE&SETN&!SI	0.0100	n/a	n/a	0.3136
CLK(HL)	D&RN&SE&SETN&!SI	0.0100	n/a	n/a	0.3140
CLK(HL)	!D&RN&!SE&!SETN&!SI	0.0100	n/a	n/a	0.4872
CLK(HL)	!D&RN&!SE&!SETN&SI	0.0100	n/a	n/a	0.4872
CLK(HL)	!D&RN&SE&!SETN&!SI	0.0100	n/a	n/a	0.5050
CLK(HL)	!D&RN&SE&!SETN&SI	0.0100	n/a	n/a	0.3540
CLK(HL)	D&RN&!SE&!SETN&!SI	0.0100	n/a	n/a	0.3345
CLK(HL)	D&RN&!SE&!SETN&SI	0.0100	n/a	n/a	0.3345
CLK(HL)	D&RN&SE&!SETN&!SI	0.0100	n/a	n/a	0.5225
CLK(HL)	D&RN&SE&!SETN&SI	0.0100	n/a	n/a	0.3436
CLK(HL)	D&RN&!SE&SETN&SI	0.0100	n/a	n/a	0.3136
CLK(HL)	D&RN&SE&SETN&SI	0.0100	n/a	n/a	0.3135
SI(HL)	!CLK&!D&!RN&!SE&!SETN	0.0100	n/a	n/a	0.0203
SI(HL)	!CLK&!D&!RN&!SE&SETN	0.0100	n/a	n/a	0.0203
SI(HL)	!CLK&!D&!RN&SE&!SETN	0.0100	n/a	n/a	0.2808
SI(HL)	!CLK&!D&!RN&SE&SETN	0.0100	n/a	n/a	0.4019
SI(HL)	!CLK&D&!RN&!SE&!SETN	0.0100	n/a	n/a	0.0202
SI(HL)	!CLK&D&!RN&!SE&SETN	0.0100	n/a	n/a	0.0202
SI(HL)	!CLK&D&!RN&SE&!SETN	0.0100	n/a	n/a	0.2844
SI(HL)	!CLK&D&!RN&SE&SETN	0.0100	n/a	n/a	0.4092
SI(HL)	CLK&!D&!RN&!SE&!SETN	0.0100	n/a	n/a	0.0202
SI(HL)	CLK&!D&!RN&!SE&SETN	0.0100	n/a	n/a	0.0202
SI(HL)	CLK&!D&!RN&SE&!SETN	0.0100	n/a	n/a	0.0220
SI(HL)	CLK&!D&!RN&SE&SETN	0.0100	n/a	n/a	0.0220
SI(HL)	CLK&D&!RN&!SE&!SETN	0.0100	n/a	n/a	0.0202
SI(HL)	CLK&D&!RN&!SE&SETN	0.0100	n/a	n/a	0.0202
SI(HL)	CLK&D&!RN&SE&!SETN	0.0100	n/a	n/a	0.0221
SI(HL)	CLK&D&!RN&SE&SETN	0.0100	n/a	n/a	0.0221
SI(HL)	CLK&!D&RN&!SE&SETN	0.0100	n/a	n/a	0.0202
SI(HL)	CLK&!D&RN&SE&SETN	0.0100	n/a	n/a	0.0877
SI(HL)	!CLK&D&RN&!SE&SETN	0.0100	n/a	n/a	0.0202
SI(HL)	!CLK&D&RN&SE&SETN	0.0100	n/a	n/a	0.3985
SI(HL)	!CLK&!D&RN&!SE&!SETN	0.0100	n/a	n/a	0.0203
SI(HL)	!CLK&!D&RN&SE&!SETN	0.0100	n/a	n/a	0.2809
SI(HL)	!CLK&D&RN&!SE&!SETN	0.0100	n/a	n/a	0.0202

continues on next page

Table 143 – continued from previous page

SI(HL)	!CLK&D&RN&SE&!SETN	0.0100	n/a	n/a	0.2844
SI(HL)	CLK&!D&RN&!SE&!SETN	0.0100	n/a	n/a	0.0202
SI(HL)	CLK&!D&RN&SE&!SETN	0.0100	n/a	n/a	0.0219
SI(HL)	CLK&D&RN&!SE&!SETN	0.0100	n/a	n/a	0.0202
SI(HL)	CLK&D&RN&SE&!SETN	0.0100	n/a	n/a	0.0221
SI(HL)	CLK&D&RN&!SE&SETN	0.0100	n/a	n/a	0.0202
SI(HL)	CLK&D&RN&SE&SETN	0.0100	n/a	n/a	0.0731
SI(HL)	!CLK&!D&RN&!SE&SETN	0.0100	n/a	n/a	0.0203
SI(HL)	!CLK&!D&RN&SE&SETN	0.0100	n/a	n/a	0.3913
D(LH)	!CLK&!RN&!SE&!SETN&!SI	0.0100	n/a	n/a	0.0688
D(LH)	!CLK&!RN&!SE&!SETN&SI	0.0100	n/a	n/a	0.0688
D(LH)	!CLK&!RN&!SE&SETN&!SI	0.0100	n/a	n/a	0.2131
D(LH)	!CLK&!RN&!SE&SETN&SI	0.0100	n/a	n/a	0.2131
D(LH)	!CLK&!RN&SE&!SETN&!SI	0.0100	n/a	n/a	-0.0186
D(LH)	!CLK&!RN&SE&!SETN&SI	0.0100	n/a	n/a	-0.0064
D(LH)	!CLK&!RN&SE&SETN&!SI	0.0100	n/a	n/a	-0.0186
D(LH)	!CLK&!RN&SE&SETN&SI	0.0100	n/a	n/a	-0.0064
D(LH)	CLK&!RN&!SE&!SETN&!SI	0.0100	n/a	n/a	-0.0154
D(LH)	CLK&!RN&!SE&!SETN&SI	0.0100	n/a	n/a	-0.0154
D(LH)	CLK&!RN&!SE&SETN&!SI	0.0100	n/a	n/a	-0.0154
D(LH)	CLK&!RN&!SE&SETN&SI	0.0100	n/a	n/a	-0.0154
D(LH)	CLK&!RN&SE&!SETN&!SI	0.0100	n/a	n/a	-0.0197
D(LH)	CLK&!RN&SE&!SETN&SI	0.0100	n/a	n/a	-0.0122
D(LH)	CLK&!RN&SE&SETN&!SI	0.0100	n/a	n/a	-0.0197
D(LH)	CLK&!RN&SE&SETN&SI	0.0100	n/a	n/a	-0.0122
D(LH)	!CLK&RN&!SE&SETN&!SI	0.0100	n/a	n/a	0.2194
D(LH)	!CLK&RN&SE&SETN&!SI	0.0100	n/a	n/a	-0.0186
D(LH)	!CLK&RN&!SE&SETN&SI	0.0100	n/a	n/a	0.2194
D(LH)	!CLK&RN&SE&SETN&SI	0.0100	n/a	n/a	-0.0064
D(LH)	CLK&RN&!SE&SETN&!SI	0.0100	n/a	n/a	-0.0154
D(LH)	CLK&RN&SE&SETN&!SI	0.0100	n/a	n/a	-0.0197
D(LH)	!CLK&RN&!SE&!SETN&!SI	0.0100	n/a	n/a	0.0688
D(LH)	!CLK&RN&!SE&!SETN&SI	0.0100	n/a	n/a	0.0689
D(LH)	!CLK&RN&SE&!SETN&!SI	0.0100	n/a	n/a	-0.0186
D(LH)	!CLK&RN&SE&!SETN&SI	0.0100	n/a	n/a	-0.0064
D(LH)	CLK&RN&!SE&!SETN&!SI	0.0100	n/a	n/a	-0.0149
D(LH)	CLK&RN&!SE&!SETN&SI	0.0100	n/a	n/a	-0.0149
D(LH)	CLK&RN&SE&!SETN&!SI	0.0100	n/a	n/a	-0.0197
D(LH)	CLK&RN&SE&!SETN&SI	0.0100	n/a	n/a	-0.0124
D(LH)	CLK&RN&!SE&SETN&SI	0.0100	n/a	n/a	-0.0154
D(LH)	CLK&RN&SE&SETN&SI	0.0100	n/a	n/a	-0.0066
RN(HL)	!CLK&!D&!SE&SETN&!SI	0.0100	n/a	n/a	0.0615
RN(HL)	!CLK&D&SE&SETN&!SI	0.0100	n/a	n/a	0.0615
RN(HL)	!CLK&D&!SE&SETN&SI	0.0100	n/a	n/a	0.0600
RN(HL)	!CLK&D&SE&SETN&SI	0.0100	n/a	n/a	0.0600
RN(HL)	CLK&D&!SE&SETN&!SI	0.0100	n/a	n/a	0.0627
RN(HL)	CLK&D&SE&SETN&!SI	0.0100	n/a	n/a	0.0628
RN(HL)	CLK&D&!SE&SETN&SI	0.0100	n/a	n/a	0.0627
RN(HL)	CLK&D&SE&SETN&SI	0.0100	n/a	n/a	0.0627
RN(HL)	!CLK&!D&SE&SETN&!SI	0.0100	n/a	n/a	0.0615
RN(HL)	!CLK&!D&!SE&SETN&SI	0.0100	n/a	n/a	0.0615
RN(HL)	!CLK&!D&SE&SETN&SI	0.0100	n/a	n/a	0.0600

continues on next page

Table 143 – continued from previous page

RN(HL)	CLK&!D&!SE&SETN&!SI	0.0100	n/a	n/a	0.0628
RN(HL)	CLK&!D&SE&SETN&!SI	0.0100	n/a	n/a	0.0629
RN(HL)	CLK&!D&!SE&SETN&SI	0.0100	n/a	n/a	0.0628
RN(HL)	CLK&!D&SE&SETN&SI	0.0100	n/a	n/a	0.0627
RN(HL)	!CLK&D&!SE&SETN&!SI	0.0100	n/a	n/a	0.0600
RN(LH)	!CLK&!D&!SE&SETN&!SI	0.0100	n/a	n/a	-0.0593
RN(LH)	!CLK&!D&!SE&SETN&SI	0.0100	n/a	n/a	-0.0593
RN(LH)	!CLK&!D&SE&SETN&!SI	0.0100	n/a	n/a	-0.0593
RN(LH)	!CLK&!D&SE&SETN&SI	0.0100	n/a	n/a	-0.0557
RN(LH)	!CLK&D&!SE&SETN&!SI	0.0100	n/a	n/a	-0.0557
RN(LH)	!CLK&D&!SE&SETN&SI	0.0100	n/a	n/a	-0.0557
RN(LH)	!CLK&D&SE&SETN&!SI	0.0100	n/a	n/a	-0.0593
RN(LH)	!CLK&D&SE&SETN&SI	0.0100	n/a	n/a	-0.0557
RN(LH)	CLK&!D&!SE&SETN&!SI	0.0100	n/a	n/a	-0.0593
RN(LH)	CLK&!D&!SE&SETN&SI	0.0100	n/a	n/a	-0.0593
RN(LH)	CLK&!D&SE&SETN&!SI	0.0100	n/a	n/a	-0.0593
RN(LH)	CLK&!D&SE&SETN&SI	0.0100	n/a	n/a	-0.0593
RN(LH)	CLK&D&!SE&SETN&!SI	0.0100	n/a	n/a	-0.0593
RN(LH)	CLK&D&!SE&SETN&SI	0.0100	n/a	n/a	-0.0593
RN(LH)	CLK&D&SE&SETN&!SI	0.0100	n/a	n/a	-0.0593
RN(LH)	CLK&D&SE&SETN&SI	0.0100	n/a	n/a	-0.0593
SETN(LH)	!CLK&!D&!RN&!SE&!SI	0.0100	n/a	n/a	0.1436
SETN(LH)	!CLK&!D&!RN&!SE&SI	0.0100	n/a	n/a	0.1436
SETN(LH)	!CLK&!D&!RN&SE&!SI	0.0100	n/a	n/a	0.1436
SETN(LH)	!CLK&!D&!RN&SE&SI	0.0100	n/a	n/a	0.0794
SETN(LH)	!CLK&D&!RN&!SE&!SI	0.0100	n/a	n/a	0.0794
SETN(LH)	!CLK&D&!RN&!SE&SI	0.0100	n/a	n/a	0.0794
SETN(LH)	!CLK&D&!RN&SE&!SI	0.0100	n/a	n/a	0.1436
SETN(LH)	!CLK&D&!RN&SE&SI	0.0100	n/a	n/a	0.0794
SETN(LH)	CLK&!D&!RN&!SE&!SI	0.0100	n/a	n/a	0.1372
SETN(LH)	CLK&!D&!RN&!SE&SI	0.0100	n/a	n/a	0.1372
SETN(LH)	CLK&!D&!RN&SE&!SI	0.0100	n/a	n/a	0.1372
SETN(LH)	CLK&!D&!RN&SE&SI	0.0100	n/a	n/a	0.1372
SETN(LH)	CLK&D&!RN&!SE&!SI	0.0100	n/a	n/a	0.1372
SETN(LH)	CLK&D&!RN&!SE&SI	0.0100	n/a	n/a	0.1372
SETN(LH)	CLK&D&!RN&SE&!SI	0.0100	n/a	n/a	0.1372
SETN(LH)	CLK&D&!RN&SE&SI	0.0100	n/a	n/a	0.1372
SETN(LH)	!CLK&!D&RN&!SE&!SI	0.0100	n/a	n/a	0.0253
SETN(LH)	!CLK&!D&RN&!SE&SI	0.0100	n/a	n/a	0.0253
SETN(LH)	!CLK&!D&RN&SE&!SI	0.0100	n/a	n/a	0.0253
SETN(LH)	!CLK&!D&RN&SE&SI	0.0100	n/a	n/a	-0.0307
SETN(LH)	!CLK&D&RN&!SE&!SI	0.0100	n/a	n/a	-0.0307
SETN(LH)	!CLK&D&RN&!SE&SI	0.0100	n/a	n/a	-0.0307
SETN(LH)	!CLK&D&RN&SE&!SI	0.0100	n/a	n/a	0.0253
SETN(LH)	!CLK&D&RN&SE&SI	0.0100	n/a	n/a	-0.0307
SETN(LH)	CLK&!D&RN&!SE&!SI	0.0100	n/a	n/a	-0.0307
SETN(LH)	CLK&!D&RN&!SE&SI	0.0100	n/a	n/a	-0.0307
SETN(LH)	CLK&!D&RN&SE&!SI	0.0100	n/a	n/a	-0.0307
SETN(LH)	CLK&!D&RN&SE&SI	0.0100	n/a	n/a	-0.0307
SETN(LH)	CLK&D&RN&!SE&!SI	0.0100	n/a	n/a	-0.0307
SETN(LH)	CLK&D&RN&!SE&SI	0.0100	n/a	n/a	-0.0307
SETN(LH)	CLK&D&RN&SE&!SI	0.0100	n/a	n/a	-0.0307

continues on next page

Table 143 – continued from previous page

SETN(LH)	CLK&D&RN&SE&SI	0.0100	n/a	n/a	-0.0307

LEAKAGE POWER

When Condition	Power (nW)
!CLK&!D&!RN&!SE&!SETN&!SI	0.5715
!CLK&!D&!RN&!SE&!SETN&SI	0.5737
!CLK&!D&!RN&!SE&SETN&!SI	0.5811
!CLK&!D&!RN&!SE&SETN&SI	0.5831
!CLK&!D&!RN&SE&!SETN&!SI	0.6100
!CLK&!D&!RN&SE&!SETN&SI	0.6321
!CLK&!D&!RN&SE&SETN&!SI	0.6196
!CLK&!D&!RN&SE&SETN&SI	0.6610
!CLK&D&!RN&!SE&!SETN&!SI	0.5625
!CLK&D&!RN&!SE&!SETN&SI	0.5625
!CLK&D&!RN&!SE&SETN&!SI	0.5913
!CLK&D&!RN&!SE&SETN&SI	0.5913
!CLK&D&!RN&SE&!SETN&!SI	0.6514
!CLK&D&!RN&SE&!SETN&SI	0.5966
!CLK&D&!RN&SE&SETN&!SI	0.6611
!CLK&D&!RN&SE&SETN&SI	0.6254
CLK&!D&!RN&!SE&!SETN&!SI	0.5912
CLK&!D&!RN&!SE&!SETN&SI	0.5913
CLK&!D&!RN&!SE&SETN&!SI	0.5598
CLK&!D&!RN&!SE&SETN&SI	0.5598
CLK&!D&!RN&SE&!SETN&!SI	0.5900
CLK&!D&!RN&SE&!SETN&SI	0.5932
CLK&!D&!RN&SE&SETN&!SI	0.5585
CLK&!D&!RN&SE&SETN&SI	0.5617
CLK&D&!RN&!SE&!SETN&!SI	0.5947
CLK&D&!RN&!SE&!SETN&SI	0.5947
CLK&D&!RN&!SE&SETN&!SI	0.5632
CLK&D&!RN&!SE&SETN&SI	0.5632
CLK&D&!RN&SE&!SETN&!SI	0.5902
CLK&D&!RN&SE&!SETN&SI	0.5932
CLK&D&!RN&SE&SETN&!SI	0.5586
CLK&D&!RN&SE&SETN&SI	0.5617
!CLK&!D&RN&!SE&SETN&!SI	0.7212
!CLK&!D&RN&!SE&SETN&SI	0.7227
!CLK&!D&RN&SE&SETN&!SI	0.7597
!CLK&!D&RN&SE&SETN&SI	0.7594
!CLK&D&RN&!SE&SETN&!SI	0.6896
!CLK&D&RN&!SE&SETN&SI	0.6898
!CLK&D&RN&SE&SETN&!SI	0.8011
!CLK&D&RN&SE&SETN&SI	0.7239
CLK&!D&RN&!SE&SETN&!SI	0.5839
CLK&!D&RN&!SE&SETN&SI	0.5839

continues on next page

Table 144 – continued from previous page

CLK&!D&RN&SE&SETN&!SI	0.5824
CLK&D&RN&SE&SETN&!SI	0.5824
!CLK&!D&RN&!SE&!SETN&!SI	0.5531
!CLK&!D&RN&!SE&!SETN&SI	0.5546
!CLK&!D&RN&SE&!SETN&!SI	0.5916
!CLK&!D&RN&SE&!SETN&SI	0.6120
!CLK&D&RN&!SE&!SETN&!SI	0.5423
!CLK&D&RN&!SE&!SETN&SI	0.5423
!CLK&D&RN&SE&!SETN&!SI	0.6331
!CLK&D&RN&SE&!SETN&SI	0.5765
CLK&!D&RN&!SE&!SETN&!SI	0.5426
CLK&!D&RN&!SE&!SETN&SI	0.5426
CLK&!D&RN&SE&!SETN&!SI	0.5412
CLK&!D&RN&SE&!SETN&SI	0.5428
CLK&D&RN&!SE&!SETN&!SI	0.5443
CLK&D&RN&!SE&!SETN&SI	0.5443
CLK&D&RN&SE&!SETN&!SI	0.5412
CLK&D&RN&SE&!SETN&SI	0.5428
CLK&!D&RN&SE&SETN&SI	0.8340
CLK&D&RN&!SE&SETN&!SI	0.7967
CLK&D&RN&!SE&SETN&SI	0.7967
CLK&D&RN&SE&SETN&SI	0.8158

gf180mcu_fd_sc_mcu7t5v0__sdffsnq_1

gf180mcu_fd_sc_mcu7t5v0__sdffsnq_1 symbol

SDFFSNQ_X1_7T5P0

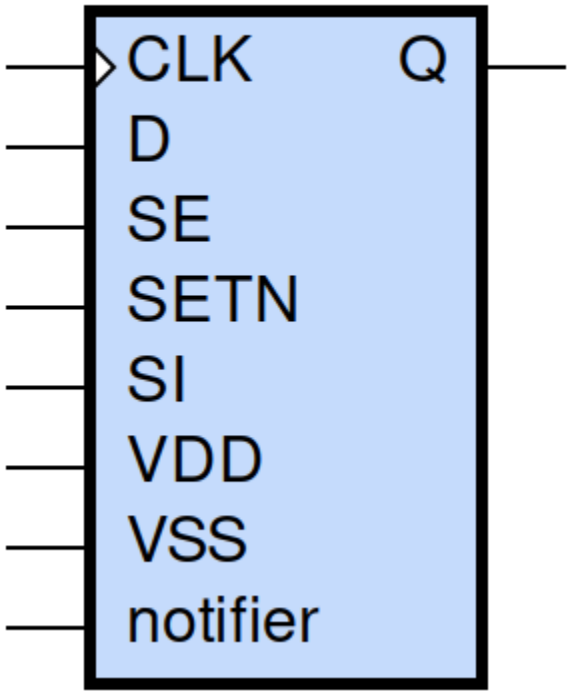

gf180mcu_fd_sc_mcu7t5v0__sdffsnq_1 schematic

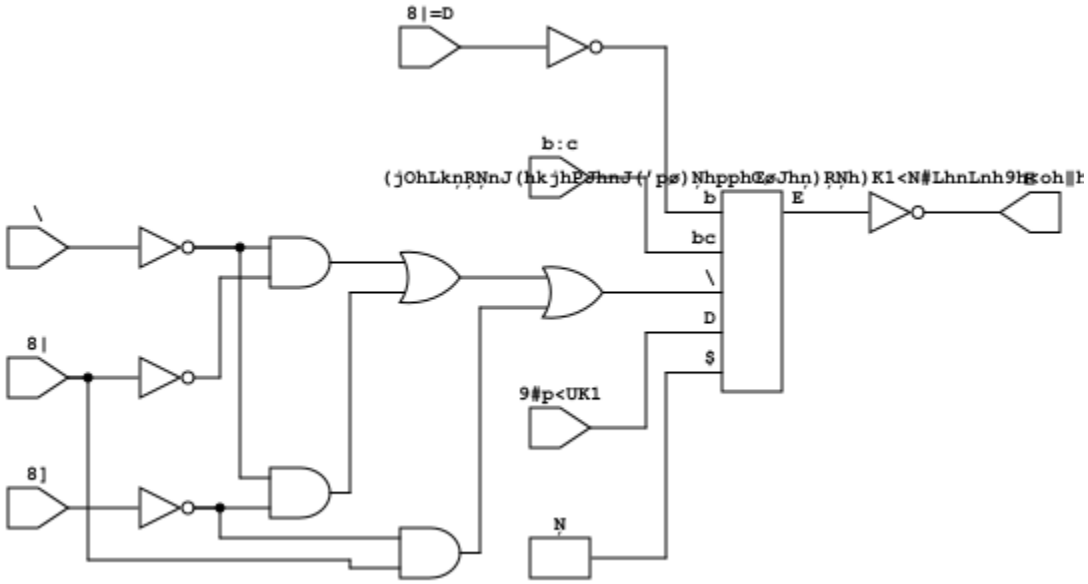

gf180mcu_fd_sc_mcu7t5v0__sdffsnq_1 layout

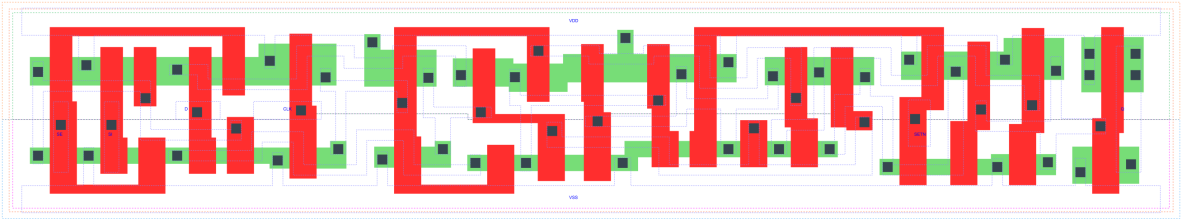

SDFFSNQ_X1 is a positive edge triggered scan D-type flip flop, active low set, 1X drive strength

Attributes

Attribute	Value
area	98.784000 μm^2

TRUTH TABLE

Input					Output
SETN	SE	SI	D	CLK	Q
H	L	X	L	↑	L
H	L	X	H	↑	H
H	H	L	X	↑	L
H	H	H	X	↑	H
L	X	X	X	X	H

FUNCTIONAL SCHEMATIC

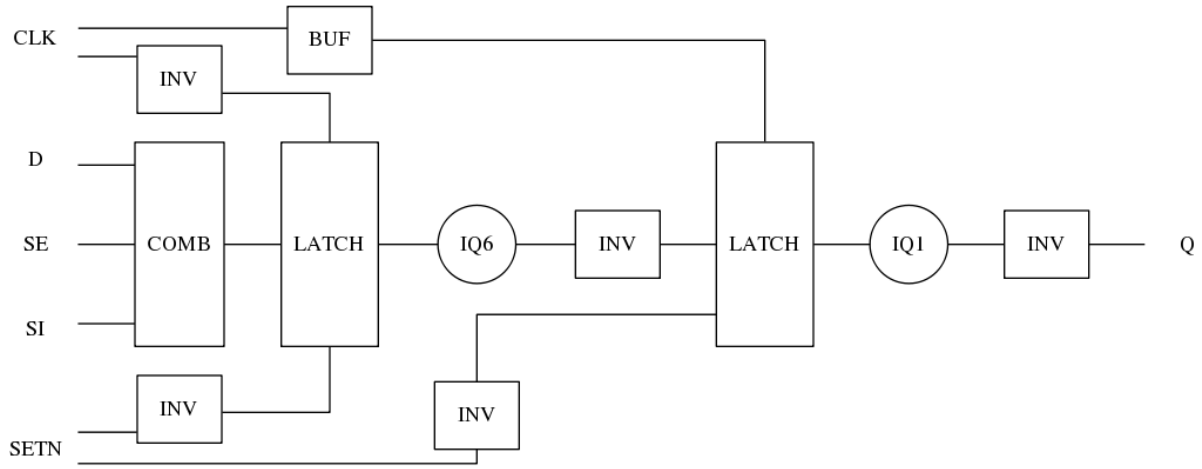

CONSTRAINTS

Constraint Pin	Related Pin	setup(ns)	hold(ns)
SE(LH)	CLK(LH)	0.5440	-0.2290
SE(LH)	CLK(LH)	0.7560	-0.1370
SE(HL)	CLK(LH)	0.6410	-0.0970
SE(HL)	CLK(LH)	0.6350	-0.3320
SI(HL)	CLK(LH)	0.7210	-0.1320
SI(HL)	CLK(LH)	0.7210	-0.1030
SI(LH)	CLK(LH)	0.5900	-0.2690
SI(LH)	CLK(LH)	0.5840	-0.2690
D(HL)	CLK(LH)	0.6300	-0.0800
D(HL)	CLK(LH)	0.6300	-0.0860
D(LH)	CLK(LH)	0.5210	-0.2180
D(LH)	CLK(LH)	0.5210	-0.2180

Constraint Pin	Related Pin	recovery(ns)	removal(ns)
SETN(LH)	CLK(LH)	-0.0170	0.2230
SETN(LH)	CLK(LH)	-0.0170	0.2230
SETN(LH)	CLK(LH)	-0.0170	0.2290
SETN(LH)	CLK(LH)	-0.0170	0.2230

Constraint Pin	Related Pin	Minimum Pulse Width(ns)
CLK(HLH)	CLK(HL)	0.7600
CLK(HLH)	CLK(HL)	0.7840
CLK(HLH)	CLK(HL)	0.7600
CLK(HLH)	CLK(HL)	0.6690
CLK(HLH)	CLK(HL)	0.6070
CLK(HLH)	CLK(HL)	0.8460
CLK(HLH)	CLK(HL)	0.6080
CLK(HLH)	CLK(HL)	0.6380
CLK(LHL)	CLK(LH)	0.4660
CLK(LHL)	CLK(LH)	0.4660
CLK(LHL)	CLK(LH)	0.4660
CLK(LHL)	CLK(LH)	0.4370
CLK(LHL)	CLK(LH)	0.4370
CLK(LHL)	CLK(LH)	0.4660
CLK(LHL)	CLK(LH)	0.4370
CLK(LHL)	CLK(LH)	0.4370
SETN(HLH)	SETN(HL)	0.3980
SETN(HLH)	SETN(HL)	0.3980
SETN(HLH)	SETN(HL)	0.3980
SETN(HLH)	SETN(HL)	0.3980
SETN(HLH)	SETN(HL)	0.3980
SETN(HLH)	SETN(HL)	0.3980
SETN(HLH)	SETN(HL)	0.3980
SETN(HLH)	SETN(HL)	0.3980
SETN(HLH)	SETN(HL)	0.3980
SETN(HLH)	SETN(HL)	0.3980
SETN(HLH)	SETN(HL)	0.3980
SETN(HLH)	SETN(HL)	0.3980
SETN(HLH)	SETN(HL)	0.3980
SETN(HLH)	SETN(HL)	0.3980
SETN(HLH)	SETN(HL)	0.3980
SETN(HLH)	SETN(HL)	0.3980

PIN CAPACITANCE (pf)

Pin	Type	Capacitance (pf)
SE	input	0.0061
SI	input	0.0027
D	input	0.0027
CLK	input	0.0036
SETN	input	0.0063

DELAY AND OUTPUT TRANSITION TIME corresponding to min slew and load

Input Pin	Output	When Condition	Tin (ns)	Out Load (pf)	Delay (ns)	Tout (ns)
CLK(LH)	Q(HL)	!D&!SE&SETN&!SI	0.0100	0.0010	0.6916	0.0422
CLK(LH)	Q(HL)	!D&!SE&SETN&SI	0.0100	0.0010	0.6916	0.0424
CLK(LH)	Q(HL)	!D&SE&SETN&!SI	0.0100	0.0010	0.6916	0.0424
CLK(LH)	Q(HL)	D&SE&SETN&!SI	0.0100	0.0010	0.6916	0.0424
CLK(LH)	Q(LH)	!D&SE&SETN&SI	0.0100	0.0010	0.6378	0.0454
CLK(LH)	Q(LH)	D&!SE&SETN&!SI	0.0100	0.0010	0.6379	0.0453
CLK(LH)	Q(LH)	D&!SE&SETN&SI	0.0100	0.0010	0.6377	0.0453
CLK(LH)	Q(LH)	D&SE&SETN&SI	0.0100	0.0010	0.6378	0.0454
SETN(HL)	Q(LH)	!CLK&!D&!SE&!SI	0.0100	0.0010	0.5346	0.0451
SETN(HL)	Q(LH)	!CLK&D&SE&!SI	0.0100	0.0010	0.5346	0.0451
SETN(HL)	Q(LH)	!CLK&D&!SE&SI	0.0100	0.0010	0.5349	0.0452
SETN(HL)	Q(LH)	!CLK&D&SE&SI	0.0100	0.0010	0.5349	0.0452
SETN(HL)	Q(LH)	CLK&D&!SE&!SI	0.0100	0.0010	0.5674	0.0454
SETN(HL)	Q(LH)	CLK&D&SE&!SI	0.0100	0.0010	0.5675	0.0453
SETN(HL)	Q(LH)	CLK&D&!SE&SI	0.0100	0.0010	0.5674	0.0454
SETN(HL)	Q(LH)	CLK&D&SE&SI	0.0100	0.0010	0.5674	0.0454
SETN(HL)	Q(LH)	!CLK&!D&SE&!SI	0.0100	0.0010	0.5345	0.0453
SETN(HL)	Q(LH)	!CLK&!D&!SE&SI	0.0100	0.0010	0.5346	0.0451
SETN(HL)	Q(LH)	!CLK&!D&SE&SI	0.0100	0.0010	0.5349	0.0452
SETN(HL)	Q(LH)	CLK&!D&!SE&!SI	0.0100	0.0010	0.5675	0.0453
SETN(HL)	Q(LH)	CLK&!D&SE&!SI	0.0100	0.0010	0.5676	0.0453
SETN(HL)	Q(LH)	CLK&!D&!SE&SI	0.0100	0.0010	0.5675	0.0453
SETN(HL)	Q(LH)	CLK&!D&SE&SI	0.0100	0.0010	0.5674	0.0454
SETN(HL)	Q(LH)	!CLK&D&!SE&!SI	0.0100	0.0010	0.5349	0.0452

DYNAMIC ENERGY

Input Pin	When Condition	Tin (ns)	Output	Out Load (pf)	Energy (uW/MHz)
CLK	!D&!SE&SETN&!SI	0.0100	Q(HL)	0.0010	0.6188
CLK	!D&!SE&SETN&SI	0.0100	Q(HL)	0.0010	0.6189
CLK	!D&SE&SETN&!SI	0.0100	Q(HL)	0.0010	0.6189
CLK	D&SE&SETN&!SI	0.0100	Q(HL)	0.0010	0.6187
CLK	!D&SE&SETN&SI	0.0100	Q(LH)	0.0010	0.6849
CLK	D&!SE&SETN&!SI	0.0100	Q(LH)	0.0010	0.6852
CLK	D&!SE&SETN&SI	0.0100	Q(LH)	0.0010	0.6849
CLK	D&SE&SETN&SI	0.0100	Q(LH)	0.0010	0.6850
SETN	!CLK&!D&!SE&!SI	0.0100	Q(LH)	0.0010	0.5672
SETN	!CLK&D&SE&!SI	0.0100	Q(LH)	0.0010	0.5672
SETN	!CLK&D&!SE&SI	0.0100	Q(LH)	0.0010	0.4639
SETN	!CLK&D&SE&SI	0.0100	Q(LH)	0.0010	0.4639
SETN	CLK&D&!SE&!SI	0.0100	Q(LH)	0.0010	0.6599
SETN	CLK&D&SE&!SI	0.0100	Q(LH)	0.0010	0.6598
SETN	CLK&D&!SE&SI	0.0100	Q(LH)	0.0010	0.6599
SETN	CLK&D&SE&SI	0.0100	Q(LH)	0.0010	0.6599
SETN	!CLK&!D&SE&!SI	0.0100	Q(LH)	0.0010	0.5668
SETN	!CLK&!D&!SE&SI	0.0100	Q(LH)	0.0010	0.5672

continues on next page

Table 146 – continued from previous page

SETN	!CLK&!D&SE&SI	0.0100	Q(LH)	0.0010	0.4639
SETN	CLK&!D&!SE&!SI	0.0100	Q(LH)	0.0010	0.6598
SETN	CLK&!D&SE&!SI	0.0100	Q(LH)	0.0010	0.6599
SETN	CLK&!D&!SE&SI	0.0100	Q(LH)	0.0010	0.6598
SETN	CLK&!D&SE&SI	0.0100	Q(LH)	0.0010	0.6599
SETN	!CLK&D&!SE&!SI	0.0100	Q(LH)	0.0010	0.4639
SETN(HL)	!CLK&!D&!SE&!SI	0.0100	n/a	n/a	0.1461
SETN(HL)	!CLK&D&SE&!SI	0.0100	n/a	n/a	0.1460
SETN(HL)	!CLK&D&!SE&SI	0.0100	n/a	n/a	0.0441
SETN(HL)	!CLK&D&SE&SI	0.0100	n/a	n/a	0.0441
SETN(HL)	CLK&D&!SE&!SI	0.0100	n/a	n/a	0.0440
SETN(HL)	CLK&D&SE&!SI	0.0100	n/a	n/a	0.0441
SETN(HL)	CLK&D&!SE&SI	0.0100	n/a	n/a	0.0440
SETN(HL)	CLK&D&SE&SI	0.0100	n/a	n/a	0.0441
SETN(HL)	!CLK&!D&SE&!SI	0.0100	n/a	n/a	0.1460
SETN(HL)	!CLK&!D&!SE&SI	0.0100	n/a	n/a	0.1460
SETN(HL)	!CLK&!D&SE&SI	0.0100	n/a	n/a	0.0441
SETN(HL)	CLK&!D&!SE&!SI	0.0100	n/a	n/a	0.0441
SETN(HL)	CLK&!D&SE&!SI	0.0100	n/a	n/a	0.0441
SETN(HL)	CLK&!D&!SE&SI	0.0100	n/a	n/a	0.0441
SETN(HL)	CLK&!D&SE&SI	0.0100	n/a	n/a	0.0441
SETN(HL)	!CLK&D&!SE&!SI	0.0100	n/a	n/a	0.0441
D(HL)	!CLK&!SE&!SETN&!SI	0.0100	n/a	n/a	0.2173
D(HL)	!CLK&!SE&!SETN&SI	0.0100	n/a	n/a	0.2173
D(HL)	!CLK&SE&!SETN&!SI	0.0100	n/a	n/a	0.0203
D(HL)	!CLK&SE&!SETN&SI	0.0100	n/a	n/a	0.0100
D(HL)	CLK&!SE&!SETN&!SI	0.0100	n/a	n/a	0.0224
D(HL)	CLK&!SE&!SETN&SI	0.0100	n/a	n/a	0.0224
D(HL)	CLK&SE&!SETN&!SI	0.0100	n/a	n/a	0.0202
D(HL)	CLK&SE&!SETN&SI	0.0100	n/a	n/a	0.0095
D(HL)	CLK&!SE&SETN&!SI	0.0100	n/a	n/a	0.0564
D(HL)	CLK&SE&SETN&!SI	0.0100	n/a	n/a	0.0202
D(HL)	CLK&!SE&SETN&SI	0.0100	n/a	n/a	0.0564
D(HL)	CLK&SE&SETN&SI	0.0100	n/a	n/a	0.0091
D(HL)	!CLK&!SE&SETN&!SI	0.0100	n/a	n/a	0.3172
D(HL)	!CLK&SE&SETN&!SI	0.0100	n/a	n/a	0.0203
D(HL)	!CLK&!SE&SETN&SI	0.0100	n/a	n/a	0.3172
D(HL)	!CLK&SE&SETN&SI	0.0100	n/a	n/a	0.0100
SE(LH)	!CLK&!D&!SETN&!SI	0.0100	n/a	n/a	0.0024
SE(LH)	!CLK&!D&!SETN&SI	0.0100	n/a	n/a	0.0880
SE(LH)	!CLK&D&!SETN&!SI	0.0100	n/a	n/a	0.2263
SE(LH)	!CLK&D&!SETN&SI	0.0100	n/a	n/a	-0.0060
SE(LH)	CLK&!D&!SETN&!SI	0.0100	n/a	n/a	0.0012
SE(LH)	CLK&!D&!SETN&SI	0.0100	n/a	n/a	-0.0048
SE(LH)	CLK&D&!SETN&!SI	0.0100	n/a	n/a	0.0040
SE(LH)	CLK&D&!SETN&SI	0.0100	n/a	n/a	-0.0080
SE(LH)	!CLK&D&SETN&!SI	0.0100	n/a	n/a	0.3368
SE(LH)	!CLK&D&SETN&SI	0.0100	n/a	n/a	-0.0060
SE(LH)	CLK&D&SETN&!SI	0.0100	n/a	n/a	0.0397
SE(LH)	CLK&D&SETN&SI	0.0100	n/a	n/a	-0.0077
SE(LH)	!CLK&!D&SETN&!SI	0.0100	n/a	n/a	0.0025
SE(LH)	!CLK&!D&SETN&SI	0.0100	n/a	n/a	0.2305

continues on next page

Table 146 – continued from previous page

SE(LH)	CLK&!D&SETN&!SI	0.0100	n/a	n/a	0.0012
SE(LH)	CLK&!D&SETN&SI	0.0100	n/a	n/a	-0.0048
CLK(LH)	!D&!SE&!SETN&!SI	0.0100	n/a	n/a	0.3103
CLK(LH)	!D&!SE&!SETN&SI	0.0100	n/a	n/a	0.3101
CLK(LH)	!D&SE&!SETN&!SI	0.0100	n/a	n/a	0.3106
CLK(LH)	!D&SE&!SETN&SI	0.0100	n/a	n/a	0.2472
CLK(LH)	D&!SE&!SETN&!SI	0.0100	n/a	n/a	0.2472
CLK(LH)	D&!SE&!SETN&SI	0.0100	n/a	n/a	0.2472
CLK(LH)	D&SE&!SETN&!SI	0.0100	n/a	n/a	0.3103
CLK(LH)	D&SE&!SETN&SI	0.0100	n/a	n/a	0.2473
CLK(LH)	D&!SE&SETN&!SI	0.0100	n/a	n/a	0.2471
CLK(LH)	D&SE&SETN&!SI	0.0100	n/a	n/a	0.2321
CLK(LH)	D&!SE&SETN&SI	0.0100	n/a	n/a	0.2471
CLK(LH)	D&SE&SETN&SI	0.0100	n/a	n/a	0.2472
CLK(LH)	!D&!SE&SETN&!SI	0.0100	n/a	n/a	0.2319
CLK(LH)	!D&SE&SETN&!SI	0.0100	n/a	n/a	0.2319
CLK(LH)	!D&!SE&SETN&SI	0.0100	n/a	n/a	0.2319
CLK(LH)	!D&SE&SETN&SI	0.0100	n/a	n/a	0.2472
SI(LH)	!CLK&!D&!SE&!SETN	0.0100	n/a	n/a	-0.0198
SI(LH)	!CLK&!D&SE&!SETN	0.0100	n/a	n/a	0.0860
SI(LH)	!CLK&D&!SE&!SETN	0.0100	n/a	n/a	-0.0183
SI(LH)	!CLK&D&SE&!SETN	0.0100	n/a	n/a	0.0755
SI(LH)	CLK&!D&!SE&!SETN	0.0100	n/a	n/a	-0.0198
SI(LH)	CLK&!D&SE&!SETN	0.0100	n/a	n/a	-0.0158
SI(LH)	CLK&D&!SE&!SETN	0.0100	n/a	n/a	-0.0188
SI(LH)	CLK&D&SE&!SETN	0.0100	n/a	n/a	-0.0158
SI(LH)	!CLK&D&!SE&SETN	0.0100	n/a	n/a	-0.0183
SI(LH)	!CLK&D&SE&SETN	0.0100	n/a	n/a	0.2170
SI(LH)	CLK&D&!SE&SETN	0.0100	n/a	n/a	-0.0184
SI(LH)	CLK&D&SE&SETN	0.0100	n/a	n/a	-0.0158
SI(LH)	!CLK&!D&!SE&SETN	0.0100	n/a	n/a	-0.0198
SI(LH)	!CLK&!D&SE&SETN	0.0100	n/a	n/a	0.2296
SI(LH)	CLK&!D&!SE&SETN	0.0100	n/a	n/a	-0.0198
SI(LH)	CLK&!D&SE&SETN	0.0100	n/a	n/a	-0.0158
SE(HL)	!CLK&!D&!SETN&!SI	0.0100	n/a	n/a	0.1306
SE(HL)	!CLK&!D&!SETN&SI	0.0100	n/a	n/a	0.3426
SE(HL)	!CLK&D&!SETN&!SI	0.0100	n/a	n/a	0.2202
SE(HL)	!CLK&D&!SETN&SI	0.0100	n/a	n/a	0.1327
SE(HL)	CLK&!D&!SETN&!SI	0.0100	n/a	n/a	0.1305
SE(HL)	CLK&!D&!SETN&SI	0.0100	n/a	n/a	0.1322
SE(HL)	CLK&D&!SETN&!SI	0.0100	n/a	n/a	0.1343
SE(HL)	CLK&D&!SETN&SI	0.0100	n/a	n/a	0.1389
SE(HL)	!CLK&D&SETN&!SI	0.0100	n/a	n/a	0.3580
SE(HL)	!CLK&D&SETN&SI	0.0100	n/a	n/a	0.1327
SE(HL)	CLK&D&SETN&!SI	0.0100	n/a	n/a	0.1358
SE(HL)	CLK&D&SETN&SI	0.0100	n/a	n/a	0.1326
SE(HL)	!CLK&!D&SETN&!SI	0.0100	n/a	n/a	0.1306
SE(HL)	!CLK&!D&SETN&SI	0.0100	n/a	n/a	0.4423
SE(HL)	CLK&!D&SETN&!SI	0.0100	n/a	n/a	0.1305
SE(HL)	CLK&!D&SETN&SI	0.0100	n/a	n/a	0.1820
CLK(HL)	!D&!SE&!SETN&!SI	0.0100	n/a	n/a	0.4631
CLK(HL)	!D&!SE&!SETN&SI	0.0100	n/a	n/a	0.4631

continues on next page

Table 146 – continued from previous page

CLK(HL)	!D&SE&!SETN&!SI	0.0100	n/a	n/a	0.4808
CLK(HL)	!D&SE&!SETN&SI	0.0100	n/a	n/a	0.3463
CLK(HL)	D&!SE&!SETN&!SI	0.0100	n/a	n/a	0.3268
CLK(HL)	D&!SE&!SETN&SI	0.0100	n/a	n/a	0.3269
CLK(HL)	D&SE&!SETN&!SI	0.0100	n/a	n/a	0.4983
CLK(HL)	D&SE&!SETN&SI	0.0100	n/a	n/a	0.3359
CLK(HL)	D&!SE&SETN&!SI	0.0100	n/a	n/a	0.3060
CLK(HL)	D&SE&SETN&!SI	0.0100	n/a	n/a	0.3073
CLK(HL)	D&!SE&SETN&SI	0.0100	n/a	n/a	0.3060
CLK(HL)	D&SE&SETN&SI	0.0100	n/a	n/a	0.3059
CLK(HL)	!D&!SE&SETN&!SI	0.0100	n/a	n/a	0.3073
CLK(HL)	!D&SE&SETN&!SI	0.0100	n/a	n/a	0.3075
CLK(HL)	!D&!SE&SETN&SI	0.0100	n/a	n/a	0.3073
CLK(HL)	!D&SE&SETN&SI	0.0100	n/a	n/a	0.3059
SI(HL)	!CLK&!D&!SE&!SETN	0.0100	n/a	n/a	0.0203
SI(HL)	!CLK&!D&SE&!SETN	0.0100	n/a	n/a	0.2630
SI(HL)	!CLK&D&!SE&!SETN	0.0100	n/a	n/a	0.0202
SI(HL)	!CLK&D&SE&!SETN	0.0100	n/a	n/a	0.2665
SI(HL)	CLK&!D&!SE&!SETN	0.0100	n/a	n/a	0.0202
SI(HL)	CLK&!D&SE&!SETN	0.0100	n/a	n/a	0.0219
SI(HL)	CLK&D&!SE&!SETN	0.0100	n/a	n/a	0.0202
SI(HL)	CLK&D&SE&!SETN	0.0100	n/a	n/a	0.0220
SI(HL)	!CLK&D&!SE&SETN	0.0100	n/a	n/a	0.0201
SI(HL)	!CLK&D&SE&SETN	0.0100	n/a	n/a	0.3771
SI(HL)	CLK&D&!SE&SETN	0.0100	n/a	n/a	0.0201
SI(HL)	CLK&D&SE&SETN	0.0100	n/a	n/a	0.0727
SI(HL)	!CLK&!D&!SE&SETN	0.0100	n/a	n/a	0.0203
SI(HL)	!CLK&!D&SE&SETN	0.0100	n/a	n/a	0.3700
SI(HL)	CLK&!D&!SE&SETN	0.0100	n/a	n/a	0.0202
SI(HL)	CLK&!D&SE&SETN	0.0100	n/a	n/a	0.0873
D(LH)	!CLK&!SE&!SETN&!SI	0.0100	n/a	n/a	0.0688
D(LH)	!CLK&!SE&!SETN&SI	0.0100	n/a	n/a	0.0688
D(LH)	!CLK&SE&!SETN&!SI	0.0100	n/a	n/a	-0.0186
D(LH)	!CLK&SE&!SETN&SI	0.0100	n/a	n/a	-0.0064
D(LH)	CLK&!SE&!SETN&!SI	0.0100	n/a	n/a	-0.0149
D(LH)	CLK&!SE&!SETN&SI	0.0100	n/a	n/a	-0.0149
D(LH)	CLK&SE&!SETN&!SI	0.0100	n/a	n/a	-0.0197
D(LH)	CLK&SE&!SETN&SI	0.0100	n/a	n/a	-0.0124
D(LH)	CLK&!SE&SETN&!SI	0.0100	n/a	n/a	-0.0155
D(LH)	CLK&SE&SETN&!SI	0.0100	n/a	n/a	-0.0197
D(LH)	CLK&!SE&SETN&SI	0.0100	n/a	n/a	-0.0155
D(LH)	CLK&SE&SETN&SI	0.0100	n/a	n/a	-0.0066
D(LH)	!CLK&!SE&SETN&!SI	0.0100	n/a	n/a	0.2066
D(LH)	!CLK&SE&SETN&!SI	0.0100	n/a	n/a	-0.0186
D(LH)	!CLK&!SE&SETN&SI	0.0100	n/a	n/a	0.2066
D(LH)	!CLK&SE&SETN&SI	0.0100	n/a	n/a	-0.0064
SETN(LH)	!CLK&!D&!SE&!SI	0.0100	n/a	n/a	0.0287
SETN(LH)	!CLK&!D&!SE&SI	0.0100	n/a	n/a	0.0287
SETN(LH)	!CLK&!D&SE&!SI	0.0100	n/a	n/a	0.0287
SETN(LH)	!CLK&!D&SE&SI	0.0100	n/a	n/a	-0.0274
SETN(LH)	!CLK&D&!SE&!SI	0.0100	n/a	n/a	-0.0274
SETN(LH)	!CLK&D&!SE&SI	0.0100	n/a	n/a	-0.0274

continues on next page

Table 146 – continued from previous page

SETN(LH)	!CLK&D&SE&!SI	0.0100	n/a	n/a	0.0287
SETN(LH)	!CLK&D&SE&SI	0.0100	n/a	n/a	-0.0274
SETN(LH)	CLK&!D&!SE&!SI	0.0100	n/a	n/a	-0.0274
SETN(LH)	CLK&!D&!SE&SI	0.0100	n/a	n/a	-0.0274
SETN(LH)	CLK&!D&SE&!SI	0.0100	n/a	n/a	-0.0274
SETN(LH)	CLK&!D&SE&SI	0.0100	n/a	n/a	-0.0274
SETN(LH)	CLK&D&!SE&!SI	0.0100	n/a	n/a	-0.0274
SETN(LH)	CLK&D&!SE&SI	0.0100	n/a	n/a	-0.0274
SETN(LH)	CLK&D&SE&!SI	0.0100	n/a	n/a	-0.0274
SETN(LH)	CLK&D&SE&SI	0.0100	n/a	n/a	-0.0274

LEAKAGE POWER

When Condition	Power (nW)
!CLK&!D&!SE&!SETN&!SI	0.4501
!CLK&!D&!SE&!SETN&SI	0.4521
!CLK&!D&SE&!SETN&!SI	0.4886
!CLK&!D&SE&!SETN&SI	0.5089
!CLK&D&!SE&!SETN&!SI	0.4393
!CLK&D&!SE&!SETN&SI	0.4393
!CLK&D&SE&!SETN&!SI	0.5300
!CLK&D&SE&!SETN&SI	0.4734
CLK&!D&!SE&!SETN&!SI	0.4208
CLK&!D&!SE&!SETN&SI	0.4208
CLK&!D&SE&!SETN&!SI	0.4194
CLK&!D&SE&!SETN&SI	0.4210
CLK&D&!SE&!SETN&!SI	0.4225
CLK&D&!SE&!SETN&SI	0.4225
CLK&D&SE&!SETN&!SI	0.4194
CLK&D&SE&!SETN&SI	0.4211
CLK&!D&!SE&SETN&!SI	0.5144
CLK&!D&!SE&SETN&SI	0.5144
CLK&!D&SE&SETN&!SI	0.5129
CLK&D&SE&SETN&!SI	0.5129
CLK&!D&SE&SETN&SI	0.6921
CLK&D&!SE&SETN&!SI	0.6548
CLK&D&!SE&SETN&SI	0.6548
CLK&D&SE&SETN&SI	0.6739
!CLK&!D&!SE&SETN&!SI	0.6464
!CLK&!D&!SE&SETN&SI	0.6484
!CLK&!D&SE&SETN&!SI	0.6849
!CLK&!D&SE&SETN&SI	0.6718
!CLK&D&!SE&SETN&!SI	0.6022
!CLK&D&!SE&SETN&SI	0.6022
!CLK&D&SE&SETN&!SI	0.7264
!CLK&D&SE&SETN&SI	0.6363

gf180mcu_fd_sc_mcu7t5v0__sdffsnq_2

gf180mcu_fd_sc_mcu7t5v0__sdffsnq_2 symbol

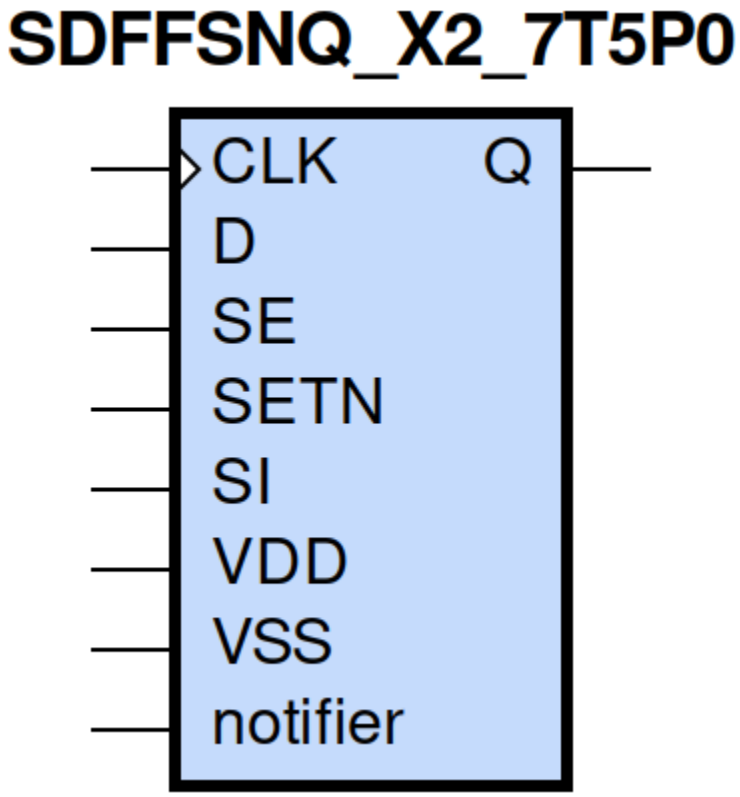

gf180mcu_fd_sc_mcu7t5v0__sdffsnq_2 schematic

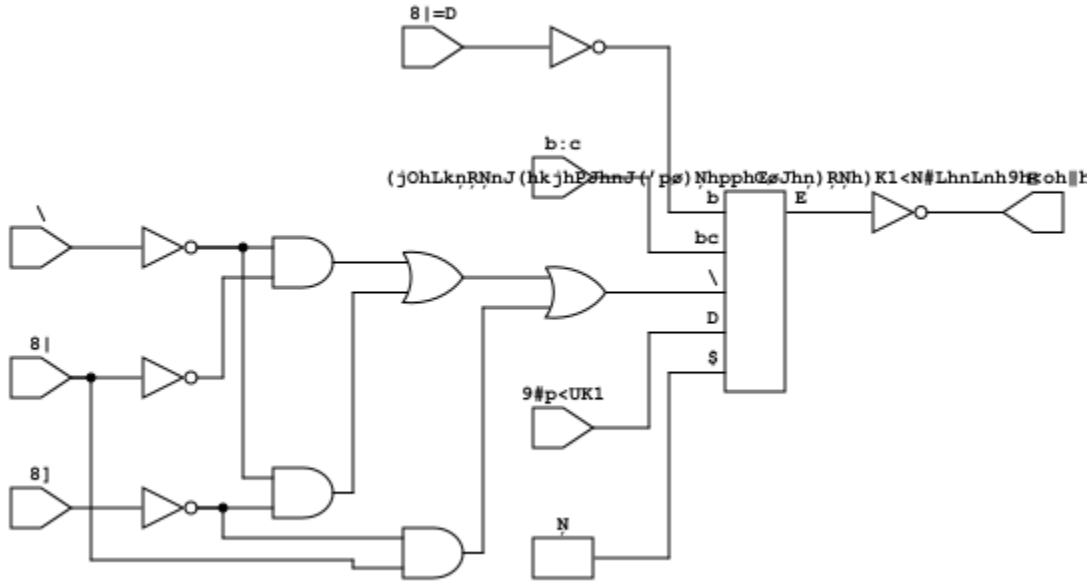

gf180mcu_fd_sc_mcu7t5v0__sdffsnq_2 layout

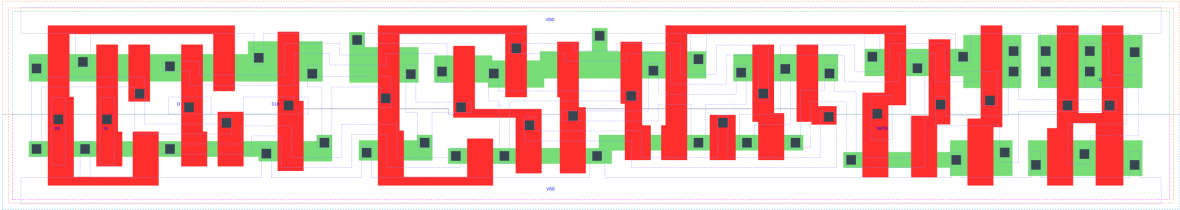

SDFFSNQ_X2 is a positive edge triggered scan D-type flip flop, active low set, 2X drive strength

Attributes

Attribute	Value
area	103.174400 μm^2

TRUTH TABLE

Input					Output
SETN	SE	SI	D	CLK	Q
H	L	X	L	↑	L
H	L	X	H	↑	H
H	H	L	X	↑	L
H	H	H	X	↑	H
L	X	X	X	X	H

FUNCTIONAL SCHEMATIC

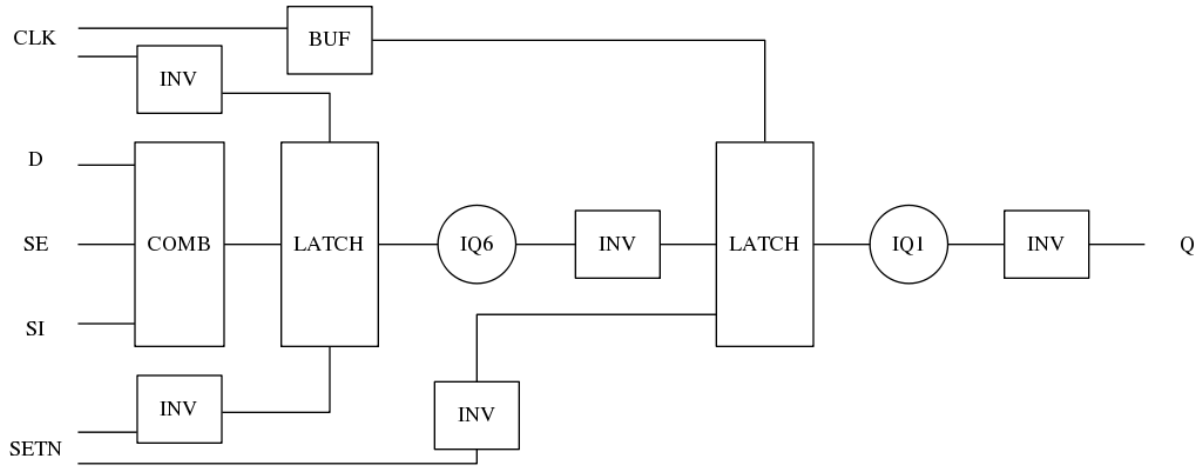

CONSTRAINTS

Constraint Pin	Related Pin	setup(ns)	hold(ns)
SE(LH)	CLK(LH)	0.5610	-0.2180
SE(LH)	CLK(LH)	0.7670	-0.1260
SE(HL)	CLK(LH)	0.6470	-0.0860
SE(HL)	CLK(LH)	0.6470	-0.3260
SI(HL)	CLK(LH)	0.7270	-0.1200
SI(HL)	CLK(LH)	0.7330	-0.0920
SI(LH)	CLK(LH)	0.6070	-0.2630
SI(LH)	CLK(LH)	0.5900	-0.2580
D(HL)	CLK(LH)	0.6350	-0.0690
D(HL)	CLK(LH)	0.6350	-0.0690
D(LH)	CLK(LH)	0.5380	-0.2120
D(LH)	CLK(LH)	0.5380	-0.2120

Constraint Pin	Related Pin	recovery(ns)	removal(ns)
SETN(LH)	CLK(LH)	-0.0110	0.2180
SETN(LH)	CLK(LH)	-0.0110	0.2180
SETN(LH)	CLK(LH)	-0.0110	0.2180
SETN(LH)	CLK(LH)	-0.0110	0.2180

Constraint Pin	Related Pin	Minimum Pulse Width(ns)
CLK(HLH)	CLK(HL)	0.7720
CLK(HLH)	CLK(HL)	0.7910
CLK(HLH)	CLK(HL)	0.7720
CLK(HLH)	CLK(HL)	0.6870
CLK(HLH)	CLK(HL)	0.6200
CLK(HLH)	CLK(HL)	0.8520
CLK(HLH)	CLK(HL)	0.6200
CLK(HLH)	CLK(HL)	0.6560
CLK(LHL)	CLK(LH)	0.5050
CLK(LHL)	CLK(LH)	0.5150
CLK(LHL)	CLK(LH)	0.5050
CLK(LHL)	CLK(LH)	0.4460
CLK(LHL)	CLK(LH)	0.4460
CLK(LHL)	CLK(LH)	0.5050
CLK(LHL)	CLK(LH)	0.4460
CLK(LHL)	CLK(LH)	0.4560
SETN(HLH)	SETN(HL)	0.4070
SETN(HLH)	SETN(HL)	0.4070
SETN(HLH)	SETN(HL)	0.4070
SETN(HLH)	SETN(HL)	0.4070
SETN(HLH)	SETN(HL)	0.4170
SETN(HLH)	SETN(HL)	0.4070
SETN(HLH)	SETN(HL)	0.4070
SETN(HLH)	SETN(HL)	0.4070
SETN(HLH)	SETN(HL)	0.4070
SETN(HLH)	SETN(HL)	0.4070
SETN(HLH)	SETN(HL)	0.4070
SETN(HLH)	SETN(HL)	0.4070
SETN(HLH)	SETN(HL)	0.4170
SETN(HLH)	SETN(HL)	0.4070
SETN(HLH)	SETN(HL)	0.4170
SETN(HLH)	SETN(HL)	0.4070

PIN CAPACITANCE (pf)

Pin	Type	Capacitance (pf)
SE	input	0.0061
SI	input	0.0027
D	input	0.0027
CLK	input	0.0036
SETN	input	0.0063

DELAY AND OUTPUT TRANSITION TIME corresponding to min slew and load

Input Pin	Output	When Condition	Tin (ns)	Out Load (pf)	Delay (ns)	Tout (ns)
CLK(LH)	Q(HL)	!D&!SE&SETN&!SI	0.0100	0.0010	0.7339	0.0388
CLK(LH)	Q(HL)	!D&!SE&SETN&SI	0.0100	0.0010	0.7339	0.0388
CLK(LH)	Q(HL)	!D&SE&SETN&!SI	0.0100	0.0010	0.7340	0.0388
CLK(LH)	Q(HL)	D&SE&SETN&!SI	0.0100	0.0010	0.7339	0.0388
CLK(LH)	Q(LH)	!D&SE&SETN&SI	0.0100	0.0010	0.6345	0.0365
CLK(LH)	Q(LH)	D&!SE&SETN&!SI	0.0100	0.0010	0.6348	0.0365
CLK(LH)	Q(LH)	D&!SE&SETN&SI	0.0100	0.0010	0.6347	0.0365
CLK(LH)	Q(LH)	D&SE&SETN&SI	0.0100	0.0010	0.6345	0.0365
SETN(HL)	Q(LH)	!CLK&!D&!SE&!SI	0.0100	0.0010	0.5262	0.0364
SETN(HL)	Q(LH)	!CLK&D&SE&!SI	0.0100	0.0010	0.5264	0.0365
SETN(HL)	Q(LH)	!CLK&D&!SE&SI	0.0100	0.0010	0.5264	0.0367
SETN(HL)	Q(LH)	!CLK&D&SE&SI	0.0100	0.0010	0.5263	0.0366
SETN(HL)	Q(LH)	CLK&D&!SE&!SI	0.0100	0.0010	0.5587	0.0363
SETN(HL)	Q(LH)	CLK&D&SE&!SI	0.0100	0.0010	0.5587	0.0363
SETN(HL)	Q(LH)	CLK&D&!SE&SI	0.0100	0.0010	0.5587	0.0363
SETN(HL)	Q(LH)	CLK&D&SE&SI	0.0100	0.0010	0.5587	0.0363
SETN(HL)	Q(LH)	!CLK&!D&SE&!SI	0.0100	0.0010	0.5262	0.0365
SETN(HL)	Q(LH)	!CLK&!D&!SE&SI	0.0100	0.0010	0.5263	0.0365
SETN(HL)	Q(LH)	!CLK&!D&SE&SI	0.0100	0.0010	0.5264	0.0367
SETN(HL)	Q(LH)	CLK&!D&!SE&!SI	0.0100	0.0010	0.5587	0.0363
SETN(HL)	Q(LH)	CLK&!D&SE&!SI	0.0100	0.0010	0.5587	0.0362
SETN(HL)	Q(LH)	CLK&!D&!SE&SI	0.0100	0.0010	0.5587	0.0363
SETN(HL)	Q(LH)	CLK&!D&SE&SI	0.0100	0.0010	0.5587	0.0363
SETN(HL)	Q(LH)	!CLK&D&!SE&!SI	0.0100	0.0010	0.5264	0.0367

DYNAMIC ENERGY

Input Pin	When Condition	Tin (ns)	Output	Out Load (pf)	Energy (uW/MHz)
CLK	!D&!SE&SETN&!SI	0.0100	Q(HL)	0.0010	0.7954
CLK	!D&!SE&SETN&SI	0.0100	Q(HL)	0.0010	0.7954
CLK	!D&SE&SETN&!SI	0.0100	Q(HL)	0.0010	0.7954
CLK	D&SE&SETN&!SI	0.0100	Q(HL)	0.0010	0.7954
CLK	!D&SE&SETN&SI	0.0100	Q(LH)	0.0010	0.8310
CLK	D&!SE&SETN&!SI	0.0100	Q(LH)	0.0010	0.8316
CLK	D&!SE&SETN&SI	0.0100	Q(LH)	0.0010	0.8312
CLK	D&SE&SETN&SI	0.0100	Q(LH)	0.0010	0.8311
SETN	!CLK&!D&!SE&!SI	0.0100	Q(LH)	0.0010	0.7155
SETN	!CLK&D&SE&!SI	0.0100	Q(LH)	0.0010	0.7155
SETN	!CLK&D&!SE&SI	0.0100	Q(LH)	0.0010	0.6120
SETN	!CLK&D&SE&SI	0.0100	Q(LH)	0.0010	0.6118
SETN	CLK&D&!SE&!SI	0.0100	Q(LH)	0.0010	0.8114
SETN	CLK&D&SE&!SI	0.0100	Q(LH)	0.0010	0.8114
SETN	CLK&D&!SE&SI	0.0100	Q(LH)	0.0010	0.8114
SETN	CLK&D&SE&SI	0.0100	Q(LH)	0.0010	0.8114
SETN	!CLK&!D&SE&!SI	0.0100	Q(LH)	0.0010	0.7153
SETN	!CLK&!D&!SE&SI	0.0100	Q(LH)	0.0010	0.7156

continues on next page

Table 149 – continued from previous page

SETN	!CLK&!D&SE&SI	0.0100	Q(LH)	0.0010	0.6120
SETN	CLK&!D&!SE&!SI	0.0100	Q(LH)	0.0010	0.8114
SETN	CLK&!D&SE&!SI	0.0100	Q(LH)	0.0010	0.8114
SETN	CLK&!D&!SE&SI	0.0100	Q(LH)	0.0010	0.8114
SETN	CLK&!D&SE&SI	0.0100	Q(LH)	0.0010	0.8114
SETN	!CLK&D&!SE&!SI	0.0100	Q(LH)	0.0010	0.6120
SETN(HL)	!CLK&!D&!SE&!SI	0.0100	n/a	n/a	0.1460
SETN(HL)	!CLK&D&SE&!SI	0.0100	n/a	n/a	0.1460
SETN(HL)	!CLK&D&!SE&SI	0.0100	n/a	n/a	0.0441
SETN(HL)	!CLK&D&SE&SI	0.0100	n/a	n/a	0.0441
SETN(HL)	CLK&D&!SE&!SI	0.0100	n/a	n/a	0.0441
SETN(HL)	CLK&D&SE&!SI	0.0100	n/a	n/a	0.0441
SETN(HL)	CLK&D&!SE&SI	0.0100	n/a	n/a	0.0441
SETN(HL)	CLK&D&SE&SI	0.0100	n/a	n/a	0.0441
SETN(HL)	!CLK&!D&SE&!SI	0.0100	n/a	n/a	0.1460
SETN(HL)	!CLK&!D&!SE&SI	0.0100	n/a	n/a	0.1460
SETN(HL)	!CLK&!D&SE&SI	0.0100	n/a	n/a	0.0441
SETN(HL)	CLK&!D&!SE&!SI	0.0100	n/a	n/a	0.0441
SETN(HL)	CLK&!D&SE&!SI	0.0100	n/a	n/a	0.0441
SETN(HL)	CLK&!D&!SE&SI	0.0100	n/a	n/a	0.0441
SETN(HL)	CLK&!D&SE&SI	0.0100	n/a	n/a	0.0441
SETN(HL)	!CLK&D&!SE&!SI	0.0100	n/a	n/a	0.0441
D(HL)	!CLK&!SE&!SETN&!SI	0.0100	n/a	n/a	0.2172
D(HL)	!CLK&!SE&!SETN&SI	0.0100	n/a	n/a	0.2172
D(HL)	!CLK&SE&!SETN&!SI	0.0100	n/a	n/a	0.0203
D(HL)	!CLK&SE&!SETN&SI	0.0100	n/a	n/a	0.0100
D(HL)	CLK&!SE&!SETN&!SI	0.0100	n/a	n/a	0.0224
D(HL)	CLK&!SE&!SETN&SI	0.0100	n/a	n/a	0.0224
D(HL)	CLK&SE&!SETN&!SI	0.0100	n/a	n/a	0.0202
D(HL)	CLK&SE&!SETN&SI	0.0100	n/a	n/a	0.0095
D(HL)	CLK&!SE&SETN&!SI	0.0100	n/a	n/a	0.0564
D(HL)	CLK&SE&SETN&!SI	0.0100	n/a	n/a	0.0202
D(HL)	CLK&!SE&SETN&SI	0.0100	n/a	n/a	0.0564
D(HL)	CLK&SE&SETN&SI	0.0100	n/a	n/a	0.0092
D(HL)	!CLK&!SE&SETN&!SI	0.0100	n/a	n/a	0.3171
D(HL)	!CLK&SE&SETN&!SI	0.0100	n/a	n/a	0.0203
D(HL)	!CLK&!SE&SETN&SI	0.0100	n/a	n/a	0.3171
D(HL)	!CLK&SE&SETN&SI	0.0100	n/a	n/a	0.0100
SE(LH)	!CLK&!D&!SETN&!SI	0.0100	n/a	n/a	0.0024
SE(LH)	!CLK&!D&!SETN&SI	0.0100	n/a	n/a	0.0880
SE(LH)	!CLK&D&!SETN&!SI	0.0100	n/a	n/a	0.2263
SE(LH)	!CLK&D&!SETN&SI	0.0100	n/a	n/a	-0.0060
SE(LH)	CLK&!D&!SETN&!SI	0.0100	n/a	n/a	0.0012
SE(LH)	CLK&!D&!SETN&SI	0.0100	n/a	n/a	-0.0048
SE(LH)	CLK&D&!SETN&!SI	0.0100	n/a	n/a	0.0040
SE(LH)	CLK&D&!SETN&SI	0.0100	n/a	n/a	-0.0080
SE(LH)	!CLK&D&SETN&!SI	0.0100	n/a	n/a	0.3368
SE(LH)	!CLK&D&SETN&SI	0.0100	n/a	n/a	-0.0060
SE(LH)	CLK&D&SETN&!SI	0.0100	n/a	n/a	0.0397
SE(LH)	CLK&D&SETN&SI	0.0100	n/a	n/a	-0.0077
SE(LH)	!CLK&!D&SETN&!SI	0.0100	n/a	n/a	0.0025
SE(LH)	!CLK&!D&SETN&SI	0.0100	n/a	n/a	0.2305

continues on next page

Table 149 – continued from previous page

SE(LH)	CLK&!D&SETN&!SI	0.0100	n/a	n/a	0.0012
SE(LH)	CLK&!D&SETN&SI	0.0100	n/a	n/a	-0.0048
CLK(LH)	!D&!SE&!SETN&!SI	0.0100	n/a	n/a	0.3100
CLK(LH)	!D&!SE&!SETN&SI	0.0100	n/a	n/a	0.3101
CLK(LH)	!D&SE&!SETN&!SI	0.0100	n/a	n/a	0.3104
CLK(LH)	!D&SE&!SETN&SI	0.0100	n/a	n/a	0.2470
CLK(LH)	D&!SE&!SETN&!SI	0.0100	n/a	n/a	0.2471
CLK(LH)	D&!SE&!SETN&SI	0.0100	n/a	n/a	0.2470
CLK(LH)	D&SE&!SETN&!SI	0.0100	n/a	n/a	0.3101
CLK(LH)	D&SE&!SETN&SI	0.0100	n/a	n/a	0.2471
CLK(LH)	D&!SE&SETN&!SI	0.0100	n/a	n/a	0.2469
CLK(LH)	D&SE&SETN&!SI	0.0100	n/a	n/a	0.2319
CLK(LH)	D&!SE&SETN&SI	0.0100	n/a	n/a	0.2469
CLK(LH)	D&SE&SETN&SI	0.0100	n/a	n/a	0.2470
CLK(LH)	!D&!SE&SETN&!SI	0.0100	n/a	n/a	0.2317
CLK(LH)	!D&SE&SETN&!SI	0.0100	n/a	n/a	0.2317
CLK(LH)	!D&!SE&SETN&SI	0.0100	n/a	n/a	0.2317
CLK(LH)	!D&SE&SETN&SI	0.0100	n/a	n/a	0.2470
SI(LH)	!CLK&!D&!SE&!SETN	0.0100	n/a	n/a	-0.0198
SI(LH)	!CLK&!D&SE&!SETN	0.0100	n/a	n/a	0.0860
SI(LH)	!CLK&D&!SE&!SETN	0.0100	n/a	n/a	-0.0183
SI(LH)	!CLK&D&SE&!SETN	0.0100	n/a	n/a	0.0756
SI(LH)	CLK&!D&!SE&!SETN	0.0100	n/a	n/a	-0.0198
SI(LH)	CLK&!D&SE&!SETN	0.0100	n/a	n/a	-0.0158
SI(LH)	CLK&D&!SE&!SETN	0.0100	n/a	n/a	-0.0188
SI(LH)	CLK&D&SE&!SETN	0.0100	n/a	n/a	-0.0158
SI(LH)	!CLK&D&!SE&SETN	0.0100	n/a	n/a	-0.0183
SI(LH)	!CLK&D&SE&SETN	0.0100	n/a	n/a	0.2170
SI(LH)	CLK&D&!SE&SETN	0.0100	n/a	n/a	-0.0184
SI(LH)	CLK&D&SE&SETN	0.0100	n/a	n/a	-0.0158
SI(LH)	!CLK&!D&!SE&SETN	0.0100	n/a	n/a	-0.0198
SI(LH)	!CLK&!D&SE&SETN	0.0100	n/a	n/a	0.2295
SI(LH)	CLK&!D&!SE&SETN	0.0100	n/a	n/a	-0.0198
SI(LH)	CLK&!D&SE&SETN	0.0100	n/a	n/a	-0.0158
SE(HL)	!CLK&!D&!SETN&!SI	0.0100	n/a	n/a	0.1306
SE(HL)	!CLK&!D&!SETN&SI	0.0100	n/a	n/a	0.3425
SE(HL)	!CLK&D&!SETN&!SI	0.0100	n/a	n/a	0.2202
SE(HL)	!CLK&D&!SETN&SI	0.0100	n/a	n/a	0.1328
SE(HL)	CLK&!D&!SETN&!SI	0.0100	n/a	n/a	0.1305
SE(HL)	CLK&!D&!SETN&SI	0.0100	n/a	n/a	0.1322
SE(HL)	CLK&D&!SETN&!SI	0.0100	n/a	n/a	0.1343
SE(HL)	CLK&D&!SETN&SI	0.0100	n/a	n/a	0.1389
SE(HL)	!CLK&D&SETN&!SI	0.0100	n/a	n/a	0.3580
SE(HL)	!CLK&D&SETN&SI	0.0100	n/a	n/a	0.1327
SE(HL)	CLK&D&SETN&!SI	0.0100	n/a	n/a	0.1358
SE(HL)	CLK&D&SETN&SI	0.0100	n/a	n/a	0.1326
SE(HL)	!CLK&!D&SETN&!SI	0.0100	n/a	n/a	0.1306
SE(HL)	!CLK&!D&SETN&SI	0.0100	n/a	n/a	0.4422
SE(HL)	CLK&!D&SETN&!SI	0.0100	n/a	n/a	0.1305
SE(HL)	CLK&!D&SETN&SI	0.0100	n/a	n/a	0.1819
CLK(HL)	!D&!SE&!SETN&!SI	0.0100	n/a	n/a	0.4630
CLK(HL)	!D&!SE&!SETN&SI	0.0100	n/a	n/a	0.4630

continues on next page

Table 149 – continued from previous page

CLK(HL)	!D&SE&!SETN&!SI	0.0100	n/a	n/a	0.4807
CLK(HL)	!D&SE&!SETN&SI	0.0100	n/a	n/a	0.3463
CLK(HL)	D&!SE&!SETN&!SI	0.0100	n/a	n/a	0.3268
CLK(HL)	D&!SE&!SETN&SI	0.0100	n/a	n/a	0.3268
CLK(HL)	D&SE&!SETN&!SI	0.0100	n/a	n/a	0.4982
CLK(HL)	D&SE&!SETN&SI	0.0100	n/a	n/a	0.3358
CLK(HL)	D&!SE&SETN&!SI	0.0100	n/a	n/a	0.3060
CLK(HL)	D&SE&SETN&!SI	0.0100	n/a	n/a	0.3074
CLK(HL)	D&!SE&SETN&SI	0.0100	n/a	n/a	0.3060
CLK(HL)	D&SE&SETN&SI	0.0100	n/a	n/a	0.3059
CLK(HL)	!D&!SE&SETN&!SI	0.0100	n/a	n/a	0.3074
CLK(HL)	!D&SE&SETN&!SI	0.0100	n/a	n/a	0.3073
CLK(HL)	!D&!SE&SETN&SI	0.0100	n/a	n/a	0.3074
CLK(HL)	!D&SE&SETN&SI	0.0100	n/a	n/a	0.3059
SI(HL)	!CLK&!D&!SE&!SETN	0.0100	n/a	n/a	0.0203
SI(HL)	!CLK&!D&SE&!SETN	0.0100	n/a	n/a	0.2630
SI(HL)	!CLK&D&!SE&!SETN	0.0100	n/a	n/a	0.0202
SI(HL)	!CLK&D&SE&!SETN	0.0100	n/a	n/a	0.2665
SI(HL)	CLK&!D&!SE&!SETN	0.0100	n/a	n/a	0.0202
SI(HL)	CLK&!D&SE&!SETN	0.0100	n/a	n/a	0.0219
SI(HL)	CLK&D&!SE&!SETN	0.0100	n/a	n/a	0.0202
SI(HL)	CLK&D&SE&!SETN	0.0100	n/a	n/a	0.0221
SI(HL)	!CLK&D&!SE&SETN	0.0100	n/a	n/a	0.0202
SI(HL)	!CLK&D&SE&SETN	0.0100	n/a	n/a	0.3770
SI(HL)	CLK&D&!SE&SETN	0.0100	n/a	n/a	0.0202
SI(HL)	CLK&D&SE&SETN	0.0100	n/a	n/a	0.0727
SI(HL)	!CLK&!D&!SE&SETN	0.0100	n/a	n/a	0.0203
SI(HL)	!CLK&!D&SE&SETN	0.0100	n/a	n/a	0.3699
SI(HL)	CLK&!D&!SE&SETN	0.0100	n/a	n/a	0.0202
SI(HL)	CLK&!D&SE&SETN	0.0100	n/a	n/a	0.0873
D(LH)	!CLK&!SE&!SETN&!SI	0.0100	n/a	n/a	0.0688
D(LH)	!CLK&!SE&!SETN&SI	0.0100	n/a	n/a	0.0688
D(LH)	!CLK&SE&!SETN&!SI	0.0100	n/a	n/a	-0.0186
D(LH)	!CLK&SE&!SETN&SI	0.0100	n/a	n/a	-0.0064
D(LH)	CLK&!SE&!SETN&!SI	0.0100	n/a	n/a	-0.0149
D(LH)	CLK&!SE&!SETN&SI	0.0100	n/a	n/a	-0.0149
D(LH)	CLK&SE&!SETN&!SI	0.0100	n/a	n/a	-0.0197
D(LH)	CLK&SE&!SETN&SI	0.0100	n/a	n/a	-0.0125
D(LH)	CLK&!SE&SETN&!SI	0.0100	n/a	n/a	-0.0155
D(LH)	CLK&SE&SETN&!SI	0.0100	n/a	n/a	-0.0197
D(LH)	CLK&!SE&SETN&SI	0.0100	n/a	n/a	-0.0155
D(LH)	CLK&SE&SETN&SI	0.0100	n/a	n/a	-0.0066
D(LH)	!CLK&!SE&SETN&!SI	0.0100	n/a	n/a	0.2066
D(LH)	!CLK&SE&SETN&!SI	0.0100	n/a	n/a	-0.0186
D(LH)	!CLK&!SE&SETN&SI	0.0100	n/a	n/a	0.2066
D(LH)	!CLK&SE&SETN&SI	0.0100	n/a	n/a	-0.0064
SETN(LH)	!CLK&!D&!SE&!SI	0.0100	n/a	n/a	0.0287
SETN(LH)	!CLK&!D&!SE&SI	0.0100	n/a	n/a	0.0287
SETN(LH)	!CLK&!D&SE&!SI	0.0100	n/a	n/a	0.0287
SETN(LH)	!CLK&!D&SE&SI	0.0100	n/a	n/a	-0.0274
SETN(LH)	!CLK&D&!SE&!SI	0.0100	n/a	n/a	-0.0274
SETN(LH)	!CLK&D&!SE&SI	0.0100	n/a	n/a	-0.0274

continues on next page

Table 149 – continued from previous page

SETN(LH)	!CLK&D&SE&!SI	0.0100	n/a	n/a	0.0287
SETN(LH)	!CLK&D&SE&SI	0.0100	n/a	n/a	-0.0274
SETN(LH)	CLK&!D&!SE&!SI	0.0100	n/a	n/a	-0.0274
SETN(LH)	CLK&!D&!SE&SI	0.0100	n/a	n/a	-0.0274
SETN(LH)	CLK&!D&SE&!SI	0.0100	n/a	n/a	-0.0274
SETN(LH)	CLK&!D&SE&SI	0.0100	n/a	n/a	-0.0274
SETN(LH)	CLK&D&!SE&!SI	0.0100	n/a	n/a	-0.0274
SETN(LH)	CLK&D&!SE&SI	0.0100	n/a	n/a	-0.0274
SETN(LH)	CLK&D&SE&!SI	0.0100	n/a	n/a	-0.0274
SETN(LH)	CLK&D&SE&SI	0.0100	n/a	n/a	-0.0274

LEAKAGE POWER

When Condition	Power (nW)
!CLK&!D&!SE&!SETN&!SI	0.4755
!CLK&!D&!SE&!SETN&SI	0.4775
!CLK&!D&SE&!SETN&!SI	0.5140
!CLK&!D&SE&!SETN&SI	0.5344
!CLK&D&!SE&!SETN&!SI	0.4647
!CLK&D&!SE&!SETN&SI	0.4647
!CLK&D&SE&!SETN&!SI	0.5554
!CLK&D&SE&!SETN&SI	0.4989
CLK&!D&!SE&!SETN&!SI	0.4463
CLK&!D&!SE&!SETN&SI	0.4463
CLK&!D&SE&!SETN&!SI	0.4448
CLK&!D&SE&!SETN&SI	0.4465
CLK&D&!SE&!SETN&!SI	0.4479
CLK&D&!SE&!SETN&SI	0.4479
CLK&D&SE&!SETN&!SI	0.4448
CLK&D&SE&!SETN&SI	0.4465
CLK&!D&!SE&SETN&!SI	0.5406
CLK&!D&!SE&SETN&SI	0.5406
CLK&!D&SE&SETN&!SI	0.5392
CLK&D&SE&SETN&!SI	0.5392
CLK&!D&SE&SETN&SI	0.7176
CLK&D&!SE&SETN&!SI	0.6803
CLK&D&!SE&SETN&SI	0.6803
CLK&D&SE&SETN&SI	0.6994
!CLK&!D&!SE&SETN&!SI	0.6720
!CLK&!D&!SE&SETN&SI	0.6740
!CLK&!D&SE&SETN&!SI	0.7105
!CLK&!D&SE&SETN&SI	0.6974
!CLK&D&!SE&SETN&!SI	0.6277
!CLK&D&!SE&SETN&SI	0.6277
!CLK&D&SE&SETN&!SI	0.7519
!CLK&D&SE&SETN&SI	0.6618

gf180mcu_fd_sc_mcu7t5v0__sdffsnq_4

gf180mcu_fd_sc_mcu7t5v0__sdffsnq_4 symbol

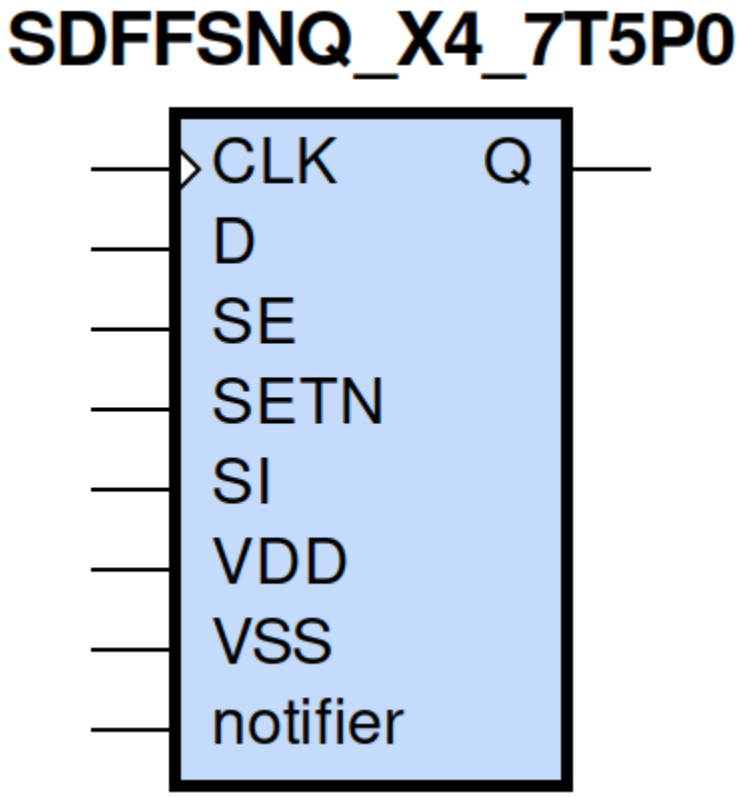

gf180mcu_fd_sc_mcu7t5v0__sdffsnq_4 schematic

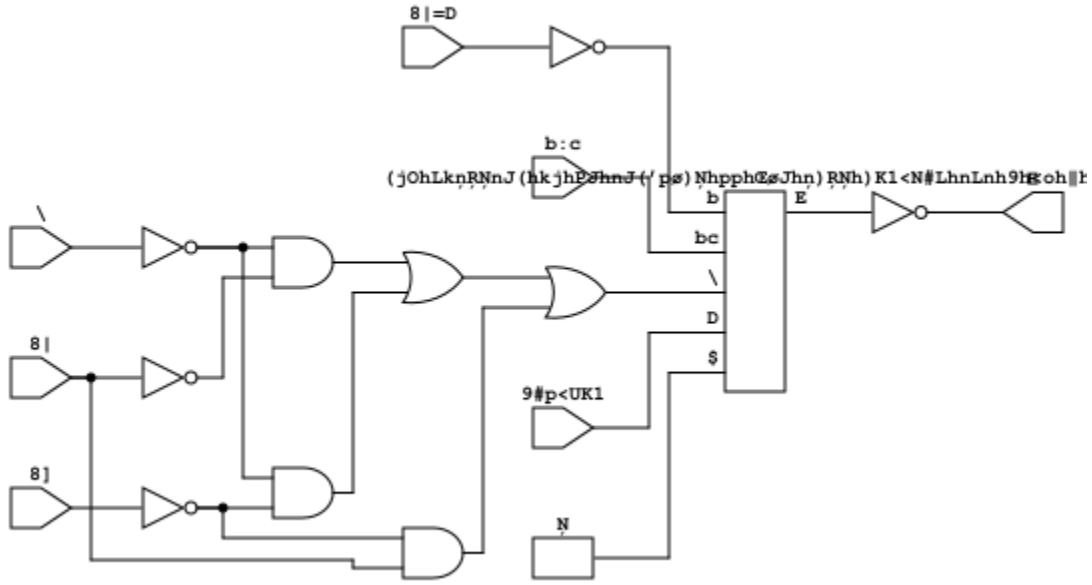

gf180mcu_fd_sc_mcu7t5v0__sdffsnq_4 layout

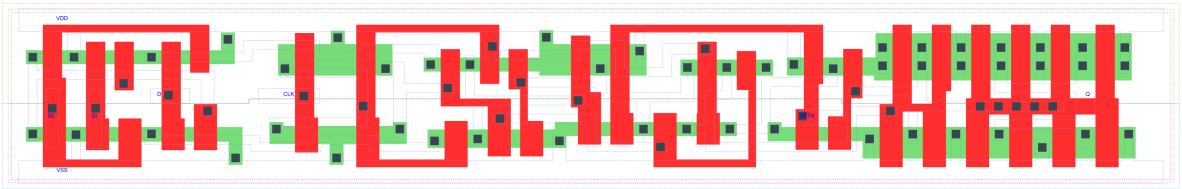

SDFFSNQ_X4 is a positive edge triggered scan D-type flip flop, active low set, 4X drive strength

Attributes

Attribute	Value
area	116.345600 μm^2

TRUTH TABLE

Input					Output
SETN	SE	SI	D	CLK	Q
H	L	X	L	↑	L
H	L	X	H	↑	H
H	H	L	X	↑	L
H	H	H	X	↑	H
L	X	X	X	X	H

FUNCTIONAL SCHEMATIC

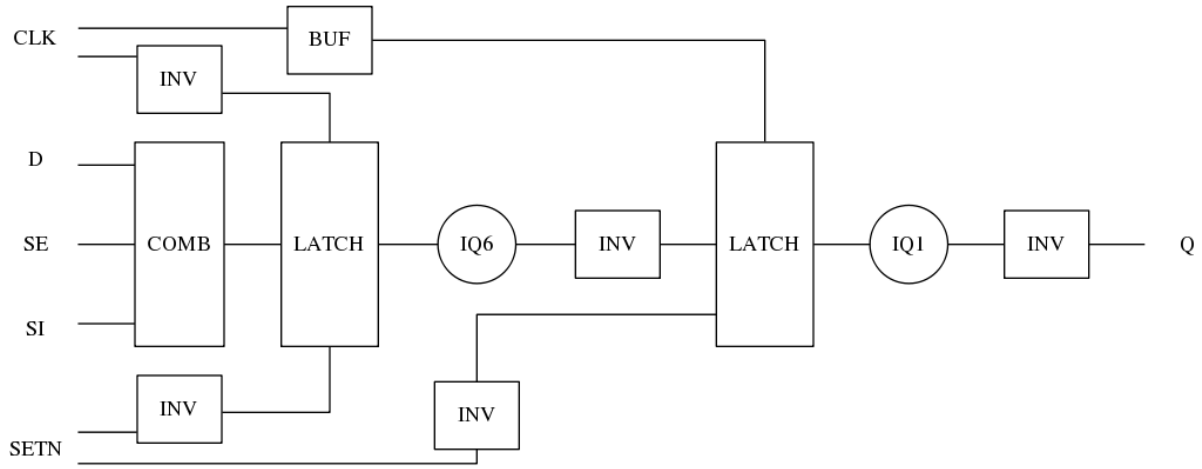

CONSTRAINTS

Constraint Pin	Related Pin	setup(ns)	hold(ns)
SE(LH)	CLK(LH)	0.3430	-0.1030
SE(LH)	CLK(LH)	1.3400	-0.4810
SE(HL)	CLK(LH)	1.1790	-0.4350
SE(HL)	CLK(LH)	0.5040	-0.2690
SI(HL)	CLK(LH)	1.3000	-0.4920
SI(HL)	CLK(LH)	1.3450	-0.4870
SI(LH)	CLK(LH)	0.3780	-0.1260
SI(LH)	CLK(LH)	0.3780	-0.1370
D(HL)	CLK(LH)	1.1680	-0.4240
D(HL)	CLK(LH)	1.1680	-0.4240
D(LH)	CLK(LH)	0.3380	-0.1090
D(LH)	CLK(LH)	0.3380	-0.1090

Constraint Pin	Related Pin	recovery(ns)	removal(ns)
SETN(LH)	CLK(LH)	0.0060	0.1140
SETN(LH)	CLK(LH)	0.0060	0.1140
SETN(LH)	CLK(LH)	0.0060	0.1140
SETN(LH)	CLK(LH)	0.0060	0.1140

Constraint Pin	Related Pin	Minimum Pulse Width(ns)
CLK(HLH)	CLK(HL)	1.1930
CLK(HLH)	CLK(HL)	1.2610
CLK(HLH)	CLK(HL)	1.1930
CLK(HLH)	CLK(HL)	0.4490
CLK(HLH)	CLK(HL)	0.4240
CLK(HLH)	CLK(HL)	1.3700
CLK(HLH)	CLK(HL)	0.4240
CLK(HLH)	CLK(HL)	0.4310
CLK(LHL)	CLK(LH)	0.5050
CLK(LHL)	CLK(LH)	0.5050
CLK(LHL)	CLK(LH)	0.5050
CLK(LHL)	CLK(LH)	0.4950
CLK(LHL)	CLK(LH)	0.4950
CLK(LHL)	CLK(LH)	0.5050
CLK(LHL)	CLK(LH)	0.4950
CLK(LHL)	CLK(LH)	0.4950
SETN(HLH)	SETN(HL)	0.5340
SETN(HLH)	SETN(HL)	0.5340
SETN(HLH)	SETN(HL)	0.5340
SETN(HLH)	SETN(HL)	0.5340
SETN(HLH)	SETN(HL)	0.3390
SETN(HLH)	SETN(HL)	0.3390
SETN(HLH)	SETN(HL)	0.3390
SETN(HLH)	SETN(HL)	0.3390
SETN(HLH)	SETN(HL)	0.5340
SETN(HLH)	SETN(HL)	0.5340
SETN(HLH)	SETN(HL)	0.5340
SETN(HLH)	SETN(HL)	0.3390
SETN(HLH)	SETN(HL)	0.3390
SETN(HLH)	SETN(HL)	0.3390
SETN(HLH)	SETN(HL)	0.3390
SETN(HLH)	SETN(HL)	0.5340

PIN CAPACITANCE (pf)

Pin	Type	Capacitance (pf)
SE	input	0.0054
SI	input	0.0023
D	input	0.0023
CLK	input	0.0033
SETN	input	0.0062

DELAY AND OUTPUT TRANSITION TIME corresponding to min slew and load

Input Pin	Output	When Condition	Tin (ns)	Out Load (pf)	Delay (ns)	Tout (ns)
CLK(LH)	Q(HL)	!D&!SE&SETN&!SI	0.0100	0.0010	0.7697	0.0365
CLK(LH)	Q(HL)	!D&!SE&SETN&SI	0.0100	0.0010	0.7697	0.0365
CLK(LH)	Q(HL)	!D&SE&SETN&!SI	0.0100	0.0010	0.7697	0.0365
CLK(LH)	Q(HL)	D&SE&SETN&!SI	0.0100	0.0010	0.7697	0.0365
CLK(LH)	Q(LH)	!D&SE&SETN&SI	0.0100	0.0010	0.6855	0.0348
CLK(LH)	Q(LH)	D&!SE&SETN&!SI	0.0100	0.0010	0.6856	0.0348
CLK(LH)	Q(LH)	D&!SE&SETN&SI	0.0100	0.0010	0.6856	0.0348
CLK(LH)	Q(LH)	D&SE&SETN&SI	0.0100	0.0010	0.6855	0.0348
SETN(HL)	Q(LH)	!CLK&!D&!SE&!SI	0.0100	0.0010	0.6450	0.0369
SETN(HL)	Q(LH)	!CLK&D&SE&!SI	0.0100	0.0010	0.6452	0.0367
SETN(HL)	Q(LH)	!CLK&D&!SE&SI	0.0100	0.0010	0.6452	0.0367
SETN(HL)	Q(LH)	!CLK&D&SE&SI	0.0100	0.0010	0.6452	0.0368
SETN(HL)	Q(LH)	CLK&D&!SE&!SI	0.0100	0.0010	0.5308	0.0342
SETN(HL)	Q(LH)	CLK&D&SE&!SI	0.0100	0.0010	0.5308	0.0342
SETN(HL)	Q(LH)	CLK&D&!SE&SI	0.0100	0.0010	0.5308	0.0342
SETN(HL)	Q(LH)	CLK&D&SE&SI	0.0100	0.0010	0.5308	0.0342
SETN(HL)	Q(LH)	!CLK&!D&SE&!SI	0.0100	0.0010	0.6452	0.0367
SETN(HL)	Q(LH)	!CLK&!D&!SE&SI	0.0100	0.0010	0.6450	0.0369
SETN(HL)	Q(LH)	!CLK&!D&SE&SI	0.0100	0.0010	0.6452	0.0368
SETN(HL)	Q(LH)	CLK&!D&!SE&!SI	0.0100	0.0010	0.5308	0.0342
SETN(HL)	Q(LH)	CLK&!D&SE&!SI	0.0100	0.0010	0.5308	0.0342
SETN(HL)	Q(LH)	CLK&!D&!SE&SI	0.0100	0.0010	0.5308	0.0342
SETN(HL)	Q(LH)	CLK&!D&SE&SI	0.0100	0.0010	0.5308	0.0342
SETN(HL)	Q(LH)	!CLK&D&!SE&!SI	0.0100	0.0010	0.6452	0.0367

DYNAMIC ENERGY

Input Pin	When Condition	Tin (ns)	Output	Out Load (pf)	Energy (uW/MHz)
CLK	!D&!SE&SETN&!SI	0.0100	Q(HL)	0.0010	1.1634
CLK	!D&!SE&SETN&SI	0.0100	Q(HL)	0.0010	1.1634
CLK	!D&SE&SETN&!SI	0.0100	Q(HL)	0.0010	1.1637
CLK	D&SE&SETN&!SI	0.0100	Q(HL)	0.0010	1.1634
CLK	!D&SE&SETN&SI	0.0100	Q(LH)	0.0010	1.1579
CLK	D&!SE&SETN&!SI	0.0100	Q(LH)	0.0010	1.1579
CLK	D&!SE&SETN&SI	0.0100	Q(LH)	0.0010	1.1579
CLK	D&SE&SETN&SI	0.0100	Q(LH)	0.0010	1.1580
SETN	!CLK&!D&!SE&!SI	0.0100	Q(LH)	0.0010	1.1577
SETN	!CLK&D&SE&!SI	0.0100	Q(LH)	0.0010	1.1592
SETN	!CLK&D&!SE&SI	0.0100	Q(LH)	0.0010	1.0557
SETN	!CLK&D&SE&SI	0.0100	Q(LH)	0.0010	1.0558
SETN	CLK&D&!SE&!SI	0.0100	Q(LH)	0.0010	1.1322
SETN	CLK&D&SE&!SI	0.0100	Q(LH)	0.0010	1.1322
SETN	CLK&D&!SE&SI	0.0100	Q(LH)	0.0010	1.1322
SETN	CLK&D&SE&SI	0.0100	Q(LH)	0.0010	1.1322
SETN	!CLK&!D&SE&!SI	0.0100	Q(LH)	0.0010	1.1592
SETN	!CLK&!D&!SE&SI	0.0100	Q(LH)	0.0010	1.1578

continues on next page

Table 152 – continued from previous page

SETN	!CLK&!D&SE&SI	0.0100	Q(LH)	0.0010	1.0558
SETN	CLK&!D&!SE&!SI	0.0100	Q(LH)	0.0010	1.1322
SETN	CLK&!D&SE&!SI	0.0100	Q(LH)	0.0010	1.1322
SETN	CLK&!D&!SE&SI	0.0100	Q(LH)	0.0010	1.1322
SETN	CLK&!D&SE&SI	0.0100	Q(LH)	0.0010	1.1322
SETN	!CLK&D&!SE&!SI	0.0100	Q(LH)	0.0010	1.0557
SETN(HL)	!CLK&!D&!SE&!SI	0.0100	n/a	n/a	0.1471
SETN(HL)	!CLK&D&SE&!SI	0.0100	n/a	n/a	0.1470
SETN(HL)	!CLK&D&!SE&SI	0.0100	n/a	n/a	0.0455
SETN(HL)	!CLK&D&SE&SI	0.0100	n/a	n/a	0.0455
SETN(HL)	CLK&D&!SE&!SI	0.0100	n/a	n/a	0.0455
SETN(HL)	CLK&D&SE&!SI	0.0100	n/a	n/a	0.0455
SETN(HL)	CLK&D&!SE&SI	0.0100	n/a	n/a	0.0455
SETN(HL)	CLK&D&SE&SI	0.0100	n/a	n/a	0.0455
SETN(HL)	!CLK&!D&SE&!SI	0.0100	n/a	n/a	0.1471
SETN(HL)	!CLK&!D&!SE&SI	0.0100	n/a	n/a	0.1471
SETN(HL)	!CLK&!D&SE&SI	0.0100	n/a	n/a	0.0455
SETN(HL)	CLK&!D&!SE&!SI	0.0100	n/a	n/a	0.0455
SETN(HL)	CLK&!D&SE&!SI	0.0100	n/a	n/a	0.0455
SETN(HL)	CLK&!D&!SE&SI	0.0100	n/a	n/a	0.0455
SETN(HL)	CLK&!D&SE&SI	0.0100	n/a	n/a	0.0455
SETN(HL)	!CLK&D&!SE&!SI	0.0100	n/a	n/a	0.0455
D(HL)	!CLK&!SE&!SETN&!SI	0.0100	n/a	n/a	0.2113
D(HL)	!CLK&!SE&!SETN&SI	0.0100	n/a	n/a	0.2113
D(HL)	!CLK&SE&!SETN&!SI	0.0100	n/a	n/a	0.0124
D(HL)	!CLK&SE&!SETN&SI	0.0100	n/a	n/a	0.0063
D(HL)	CLK&!SE&!SETN&!SI	0.0100	n/a	n/a	0.0150
D(HL)	CLK&!SE&!SETN&SI	0.0100	n/a	n/a	0.0150
D(HL)	CLK&SE&!SETN&!SI	0.0100	n/a	n/a	0.0122
D(HL)	CLK&SE&!SETN&SI	0.0100	n/a	n/a	0.0051
D(HL)	CLK&!SE&SETN&!SI	0.0100	n/a	n/a	0.0506
D(HL)	CLK&SE&SETN&!SI	0.0100	n/a	n/a	0.0122
D(HL)	CLK&!SE&SETN&SI	0.0100	n/a	n/a	0.0506
D(HL)	CLK&SE&SETN&SI	0.0100	n/a	n/a	0.0060
D(HL)	!CLK&!SE&SETN&!SI	0.0100	n/a	n/a	0.3683
D(HL)	!CLK&SE&SETN&!SI	0.0100	n/a	n/a	0.0124
D(HL)	!CLK&!SE&SETN&SI	0.0100	n/a	n/a	0.3684
D(HL)	!CLK&SE&SETN&SI	0.0100	n/a	n/a	0.0063
SE(LH)	!CLK&!D&!SETN&!SI	0.0100	n/a	n/a	0.0034
SE(LH)	!CLK&!D&!SETN&SI	0.0100	n/a	n/a	0.0774
SE(LH)	!CLK&D&!SETN&!SI	0.0100	n/a	n/a	0.2283
SE(LH)	!CLK&D&!SETN&SI	0.0100	n/a	n/a	-0.0023
SE(LH)	CLK&!D&!SETN&!SI	0.0100	n/a	n/a	0.0018
SE(LH)	CLK&!D&!SETN&SI	0.0100	n/a	n/a	-0.0022
SE(LH)	CLK&D&!SETN&!SI	0.0100	n/a	n/a	0.0049
SE(LH)	CLK&D&!SETN&SI	0.0100	n/a	n/a	-0.0044
SE(LH)	!CLK&D&SETN&!SI	0.0100	n/a	n/a	0.4100
SE(LH)	!CLK&D&SETN&SI	0.0100	n/a	n/a	-0.0023
SE(LH)	CLK&D&SETN&!SI	0.0100	n/a	n/a	0.0415
SE(LH)	CLK&D&SETN&SI	0.0100	n/a	n/a	-0.0030
SE(LH)	!CLK&!D&SETN&!SI	0.0100	n/a	n/a	0.0034
SE(LH)	!CLK&!D&SETN&SI	0.0100	n/a	n/a	0.2187

continues on next page

Table 152 – continued from previous page

SE(LH)	CLK&!D&SETN&!SI	0.0100	n/a	n/a	0.0018
SE(LH)	CLK&!D&SETN&SI	0.0100	n/a	n/a	-0.0022
CLK(LH)	!D&!SE&!SETN&!SI	0.0100	n/a	n/a	0.2628
CLK(LH)	!D&!SE&!SETN&SI	0.0100	n/a	n/a	0.2628
CLK(LH)	!D&SE&!SETN&!SI	0.0100	n/a	n/a	0.2630
CLK(LH)	!D&SE&!SETN&SI	0.0100	n/a	n/a	0.2112
CLK(LH)	D&!SE&!SETN&!SI	0.0100	n/a	n/a	0.2112
CLK(LH)	D&!SE&!SETN&SI	0.0100	n/a	n/a	0.2112
CLK(LH)	D&SE&!SETN&!SI	0.0100	n/a	n/a	0.2628
CLK(LH)	D&SE&!SETN&SI	0.0100	n/a	n/a	0.2111
CLK(LH)	D&!SE&SETN&!SI	0.0100	n/a	n/a	0.2112
CLK(LH)	D&SE&SETN&!SI	0.0100	n/a	n/a	0.2020
CLK(LH)	D&!SE&SETN&SI	0.0100	n/a	n/a	0.2111
CLK(LH)	D&SE&SETN&SI	0.0100	n/a	n/a	0.2111
CLK(LH)	!D&!SE&SETN&!SI	0.0100	n/a	n/a	0.2020
CLK(LH)	!D&SE&SETN&!SI	0.0100	n/a	n/a	0.2020
CLK(LH)	!D&!SE&SETN&SI	0.0100	n/a	n/a	0.2020
CLK(LH)	!D&SE&SETN&SI	0.0100	n/a	n/a	0.2112
SI(LH)	!CLK&!D&!SE&!SETN	0.0100	n/a	n/a	-0.0120
SI(LH)	!CLK&!D&SE&!SETN	0.0100	n/a	n/a	0.0751
SI(LH)	!CLK&D&!SE&!SETN	0.0100	n/a	n/a	-0.0109
SI(LH)	!CLK&D&SE&!SETN	0.0100	n/a	n/a	0.0685
SI(LH)	CLK&!D&!SE&!SETN	0.0100	n/a	n/a	-0.0119
SI(LH)	CLK&!D&SE&!SETN	0.0100	n/a	n/a	-0.0092
SI(LH)	CLK&D&!SE&!SETN	0.0100	n/a	n/a	-0.0112
SI(LH)	CLK&D&SE&!SETN	0.0100	n/a	n/a	-0.0091
SI(LH)	!CLK&D&!SE&SETN	0.0100	n/a	n/a	-0.0109
SI(LH)	!CLK&D&SE&SETN	0.0100	n/a	n/a	0.2105
SI(LH)	CLK&D&!SE&SETN	0.0100	n/a	n/a	-0.0110
SI(LH)	CLK&D&SE&SETN	0.0100	n/a	n/a	-0.0091
SI(LH)	!CLK&!D&!SE&SETN	0.0100	n/a	n/a	-0.0120
SI(LH)	!CLK&!D&SE&SETN	0.0100	n/a	n/a	0.2176
SI(LH)	CLK&!D&!SE&SETN	0.0100	n/a	n/a	-0.0119
SI(LH)	CLK&!D&SE&SETN	0.0100	n/a	n/a	-0.0092
SE(HL)	!CLK&!D&!SETN&!SI	0.0100	n/a	n/a	0.1162
SE(HL)	!CLK&!D&!SETN&SI	0.0100	n/a	n/a	0.3241
SE(HL)	!CLK&D&!SETN&!SI	0.0100	n/a	n/a	0.1938
SE(HL)	!CLK&D&!SETN&SI	0.0100	n/a	n/a	0.1173
SE(HL)	CLK&!D&!SETN&!SI	0.0100	n/a	n/a	0.1160
SE(HL)	CLK&!D&!SETN&SI	0.0100	n/a	n/a	0.1178
SE(HL)	CLK&D&!SETN&!SI	0.0100	n/a	n/a	0.1188
SE(HL)	CLK&D&!SETN&SI	0.0100	n/a	n/a	0.1222
SE(HL)	!CLK&D&SETN&!SI	0.0100	n/a	n/a	0.3336
SE(HL)	!CLK&D&SETN&SI	0.0100	n/a	n/a	0.1174
SE(HL)	CLK&D&SETN&!SI	0.0100	n/a	n/a	0.1205
SE(HL)	CLK&D&SETN&SI	0.0100	n/a	n/a	0.1174
SE(HL)	!CLK&!D&SETN&!SI	0.0100	n/a	n/a	0.1162
SE(HL)	!CLK&!D&SETN&SI	0.0100	n/a	n/a	0.4810
SE(HL)	CLK&!D&SETN&!SI	0.0100	n/a	n/a	0.1160
SE(HL)	CLK&!D&SETN&SI	0.0100	n/a	n/a	0.1635
CLK(HL)	!D&!SE&!SETN&!SI	0.0100	n/a	n/a	0.4528
CLK(HL)	!D&!SE&!SETN&SI	0.0100	n/a	n/a	0.4528

continues on next page

Table 152 – continued from previous page

CLK(HL)	!D&SE&!SETN&!SI	0.0100	n/a	n/a	0.4713
CLK(HL)	!D&SE&!SETN&SI	0.0100	n/a	n/a	0.3243
CLK(HL)	D&!SE&!SETN&!SI	0.0100	n/a	n/a	0.3118
CLK(HL)	D&!SE&!SETN&SI	0.0100	n/a	n/a	0.3118
CLK(HL)	D&SE&!SETN&!SI	0.0100	n/a	n/a	0.4895
CLK(HL)	D&SE&!SETN&SI	0.0100	n/a	n/a	0.3177
CLK(HL)	D&!SE&SETN&!SI	0.0100	n/a	n/a	0.2978
CLK(HL)	D&SE&SETN&!SI	0.0100	n/a	n/a	0.2953
CLK(HL)	D&!SE&SETN&SI	0.0100	n/a	n/a	0.2978
CLK(HL)	D&SE&SETN&SI	0.0100	n/a	n/a	0.2978
CLK(HL)	!D&!SE&SETN&!SI	0.0100	n/a	n/a	0.2954
CLK(HL)	!D&SE&SETN&!SI	0.0100	n/a	n/a	0.2954
CLK(HL)	!D&!SE&SETN&SI	0.0100	n/a	n/a	0.2954
CLK(HL)	!D&SE&SETN&SI	0.0100	n/a	n/a	0.2978
SI(HL)	!CLK&!D&!SE&!SETN	0.0100	n/a	n/a	0.0123
SI(HL)	!CLK&!D&SE&!SETN	0.0100	n/a	n/a	0.2455
SI(HL)	!CLK&D&!SE&!SETN	0.0100	n/a	n/a	0.0122
SI(HL)	!CLK&D&SE&!SETN	0.0100	n/a	n/a	0.2556
SI(HL)	CLK&!D&!SE&!SETN	0.0100	n/a	n/a	0.0122
SI(HL)	CLK&!D&SE&!SETN	0.0100	n/a	n/a	0.0140
SI(HL)	CLK&D&!SE&!SETN	0.0100	n/a	n/a	0.0122
SI(HL)	CLK&D&SE&!SETN	0.0100	n/a	n/a	0.0143
SI(HL)	!CLK&D&!SE&SETN	0.0100	n/a	n/a	0.0122
SI(HL)	!CLK&D&SE&SETN	0.0100	n/a	n/a	0.4374
SI(HL)	CLK&D&!SE&SETN	0.0100	n/a	n/a	0.0121
SI(HL)	CLK&D&SE&SETN	0.0100	n/a	n/a	0.0604
SI(HL)	!CLK&!D&!SE&SETN	0.0100	n/a	n/a	0.0123
SI(HL)	!CLK&!D&SE&SETN	0.0100	n/a	n/a	0.4171
SI(HL)	CLK&!D&!SE&SETN	0.0100	n/a	n/a	0.0122
SI(HL)	CLK&!D&SE&SETN	0.0100	n/a	n/a	0.0692
D(LH)	!CLK&!SE&!SETN&!SI	0.0100	n/a	n/a	0.0641
D(LH)	!CLK&!SE&!SETN&SI	0.0100	n/a	n/a	0.0641
D(LH)	!CLK&SE&!SETN&!SI	0.0100	n/a	n/a	-0.0108
D(LH)	!CLK&SE&!SETN&SI	0.0100	n/a	n/a	-0.0038
D(LH)	CLK&!SE&!SETN&!SI	0.0100	n/a	n/a	-0.0082
D(LH)	CLK&!SE&!SETN&SI	0.0100	n/a	n/a	-0.0082
D(LH)	CLK&SE&!SETN&!SI	0.0100	n/a	n/a	-0.0119
D(LH)	CLK&SE&!SETN&SI	0.0100	n/a	n/a	-0.0067
D(LH)	CLK&!SE&SETN&!SI	0.0100	n/a	n/a	-0.0083
D(LH)	CLK&SE&SETN&!SI	0.0100	n/a	n/a	-0.0119
D(LH)	CLK&!SE&SETN&SI	0.0100	n/a	n/a	-0.0083
D(LH)	CLK&SE&SETN&SI	0.0100	n/a	n/a	-0.0039
D(LH)	!CLK&!SE&SETN&!SI	0.0100	n/a	n/a	0.2034
D(LH)	!CLK&SE&SETN&!SI	0.0100	n/a	n/a	-0.0108
D(LH)	!CLK&!SE&SETN&SI	0.0100	n/a	n/a	0.2034
D(LH)	!CLK&SE&SETN&SI	0.0100	n/a	n/a	-0.0038
SETN(LH)	!CLK&!D&!SE&!SI	0.0100	n/a	n/a	0.0191
SETN(LH)	!CLK&!D&!SE&SI	0.0100	n/a	n/a	0.0191
SETN(LH)	!CLK&!D&SE&!SI	0.0100	n/a	n/a	0.0191
SETN(LH)	!CLK&!D&SE&SI	0.0100	n/a	n/a	-0.0317
SETN(LH)	!CLK&D&!SE&!SI	0.0100	n/a	n/a	-0.0317
SETN(LH)	!CLK&D&!SE&SI	0.0100	n/a	n/a	-0.0317

continues on next page

Table 152 – continued from previous page

SETN(LH)	!CLK&D&SE&!SI	0.0100	n/a	n/a	0.0191
SETN(LH)	!CLK&D&SE&SI	0.0100	n/a	n/a	-0.0317
SETN(LH)	CLK&!D&!SE&!SI	0.0100	n/a	n/a	-0.0317
SETN(LH)	CLK&!D&!SE&SI	0.0100	n/a	n/a	-0.0317
SETN(LH)	CLK&!D&SE&!SI	0.0100	n/a	n/a	-0.0317
SETN(LH)	CLK&!D&SE&SI	0.0100	n/a	n/a	-0.0317
SETN(LH)	CLK&D&!SE&!SI	0.0100	n/a	n/a	-0.0317
SETN(LH)	CLK&D&!SE&SI	0.0100	n/a	n/a	-0.0317
SETN(LH)	CLK&D&SE&!SI	0.0100	n/a	n/a	-0.0317
SETN(LH)	CLK&D&SE&SI	0.0100	n/a	n/a	-0.0317

LEAKAGE POWER

When Condition	Power (nW)
!CLK&!D&!SE&!SETN&!SI	0.5514
!CLK&!D&!SE&!SETN&SI	0.5523
!CLK&!D&SE&!SETN&!SI	0.5896
!CLK&!D&SE&!SETN&SI	0.6121
!CLK&D&!SE&!SETN&!SI	0.5414
!CLK&D&!SE&!SETN&SI	0.5414
!CLK&D&SE&!SETN&!SI	0.6301
!CLK&D&SE&!SETN&SI	0.5763
CLK&!D&!SE&!SETN&!SI	0.5229
CLK&!D&!SE&!SETN&SI	0.5229
CLK&!D&SE&!SETN&!SI	0.5220
CLK&!D&SE&!SETN&SI	0.5243
CLK&D&!SE&!SETN&!SI	0.5253
CLK&D&!SE&!SETN&SI	0.5253
CLK&D&SE&!SETN&!SI	0.5220
CLK&D&SE&!SETN&SI	0.5244
CLK&!D&!SE&SETN&!SI	0.6159
CLK&!D&!SE&SETN&SI	0.6159
CLK&!D&SE&SETN&!SI	0.6150
CLK&D&SE&SETN&!SI	0.6150
CLK&!D&SE&SETN&SI	0.7405
CLK&D&!SE&SETN&!SI	0.6970
CLK&D&!SE&SETN&SI	0.6970
CLK&D&SE&SETN&SI	0.7197
!CLK&!D&!SE&SETN&!SI	0.7402
!CLK&!D&!SE&SETN&SI	0.7411
!CLK&!D&SE&SETN&!SI	0.7784
!CLK&!D&SE&SETN&SI	0.7603
!CLK&D&!SE&SETN&!SI	0.6896
!CLK&D&!SE&SETN&SI	0.6896
!CLK&D&SE&SETN&!SI	0.8189
!CLK&D&SE&SETN&SI	0.7246

gf180mcu_fd_sc_mcu7t5v0__tieh

gf180mcu_fd_sc_mcu7t5v0__tieh symbol

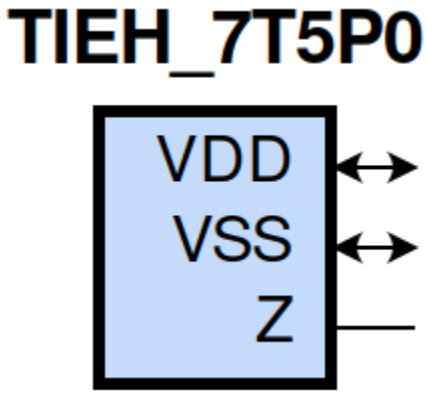

gf180mcu_fd_sc_mcu7t5v0__tieh schematic

gf180mcu_fd_sc_mcu7t5v0__tieh layout

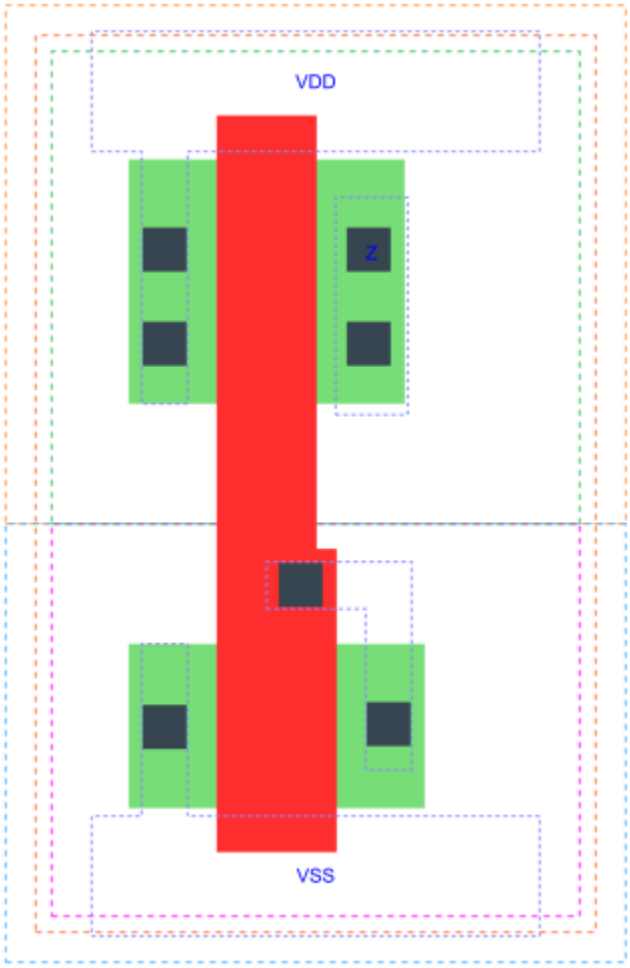

TIEH is a high level generator

Attributes

Attribute	Value
area	8.780800 μm^2

OUTPUT FUNCTIONS

Output Pin	Function
Z	1

TRUTH TABLE FOR Z

Z

FUNCTIONAL SCHEMATIC

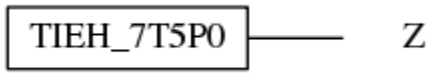

LEAKAGE POWER

When Condition	Power (nW)
default	0.0500

gf180mcu_fd_sc_mcu7t5v0__tiel

gf180mcu_fd_sc_mcu7t5v0__tiel symbol

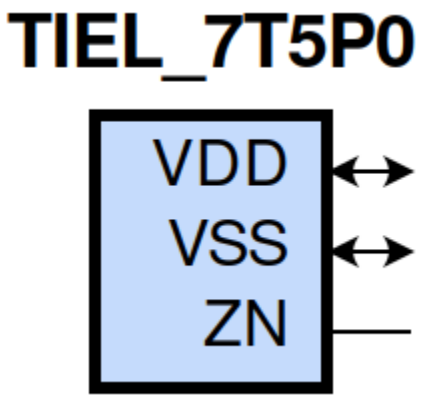

gf180mcu_fd_sc_mcu7t5v0__tiel schematic

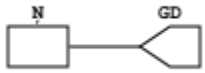

gf180mcu_fd_sc_mcu7t5v0__tiel layout

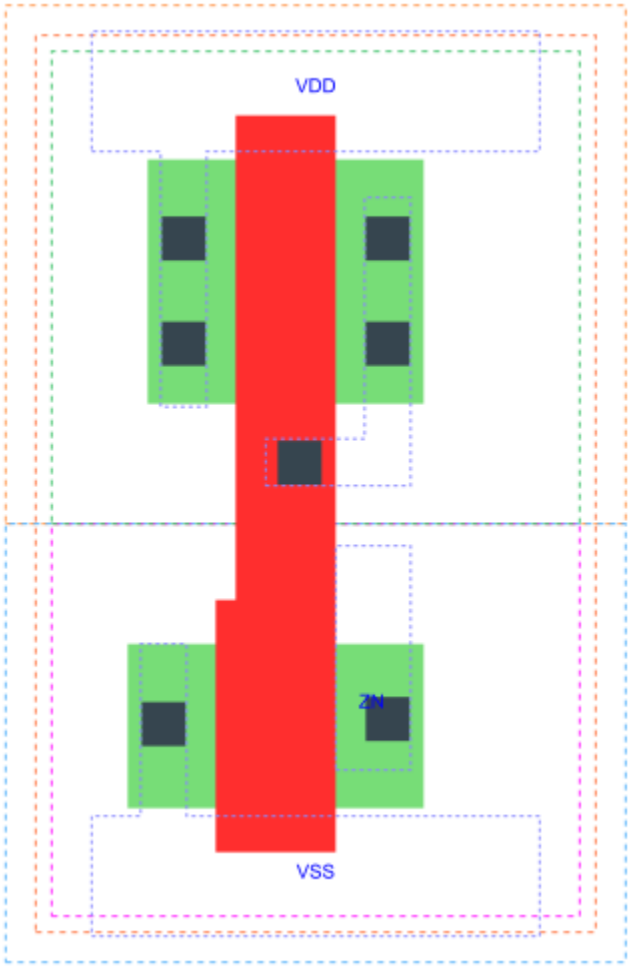

TIEL is a low level generator

Attributes

Attribute	Value
area	8.780800 μm^2

OUTPUT FUNCTIONS

Output Pin	Function
ZN	0

TRUTH TABLE FOR ZN

ZN

FUNCTIONAL SCHEMATIC

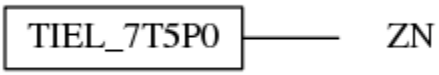

LEAKAGE POWER

When Condition	Power (nW)
default	0.0499

gf180mcu_fd_sc_mcu7t5v0__xnor2_1

gf180mcu_fd_sc_mcu7t5v0__xnor2_1 symbol

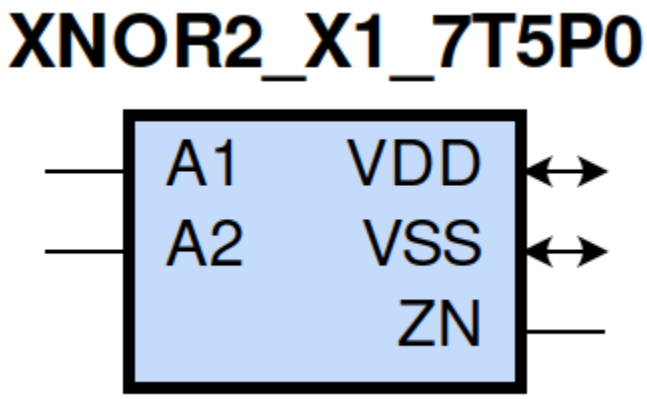

gf180mcu_fd_sc_mcu7t5v0__xnor2_1 schematic

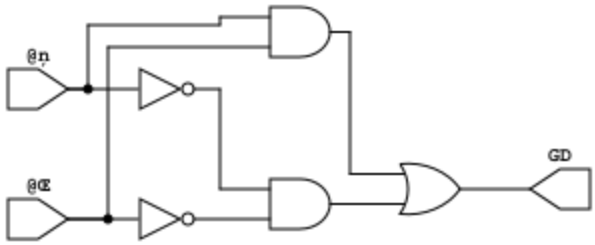

gf180mcu_fd_sc_mcu7t5v0__xnor2_1 layout

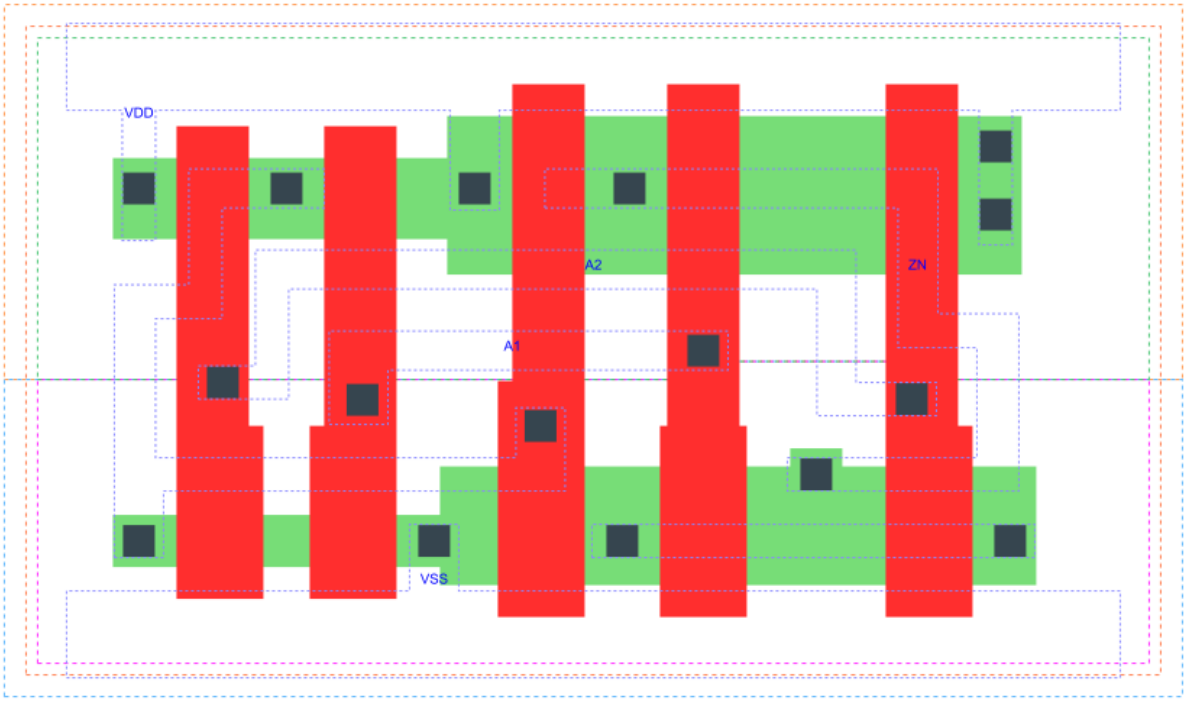

XNOR2_X1 is a 2-input exclusive NOR, 1X drive strength

Attributes

Attribute	Value
area	28.537600 μm^2

OUTPUT FUNCTIONS

Output Pin	Function
ZN	(!(A1^A2))

TRUTH TABLE FOR ZN

A1	A2	ZN
1	1	1
0	0	1
1	0	0
0	1	0

FUNCTIONAL SCHEMATIC

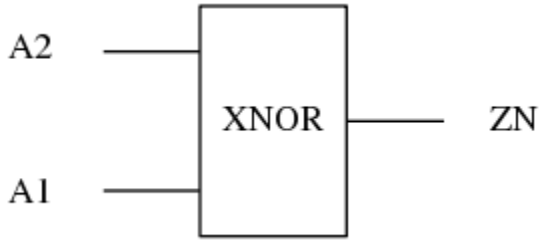

PIN CAPACITANCE (pf)

Pin	Type	Capacitance (pf)
A2	input	0.0074
A1	input	0.0071

DELAY AND OUTPUT TRANSITION TIME corresponding to min slew and load

Input Pin	Output	When Condition	Tin (ns)	Out Load (pf)	Delay (ns)	Tout (ns)
A2(LH)	ZN(LH)	A1	0.0100	0.0010	0.3108	0.1043
A2(HL)	ZN(LH)	!A1	0.0100	0.0010	0.1660	0.1039
A2(HL)	ZN(HL)	A1	0.0100	0.0010	0.2474	0.0585
A2(LH)	ZN(HL)	!A1	0.0100	0.0010	0.0880	0.0613
A1(HL)	ZN(LH)	!A2	0.0100	0.0010	0.1346	0.1035
A1(HL)	ZN(HL)	A2	0.0100	0.0010	0.2881	0.0741
A1(LH)	ZN(HL)	!A2	0.0100	0.0010	0.0671	0.0434
A1(LH)	ZN(LH)	A2	0.0100	0.0010	0.3229	0.1044

DYNAMIC ENERGY

Input Pin	When Condition	Tin (ns)	Output	Out Load (pf)	Energy (uW/MHz)
A2	A1	0.0100	ZN(LH)	0.0010	0.2153
A2	!A1	0.0100	ZN(LH)	0.0010	0.1822
A1	!A2	0.0100	ZN(LH)	0.0010	0.1549
A1	A2	0.0100	ZN(LH)	0.0010	0.2376
A1	A2	0.0100	ZN(HL)	0.0010	0.2626
A1	!A2	0.0100	ZN(HL)	0.0010	-0.0078
A2	A1	0.0100	ZN(HL)	0.0010	0.2203
A2	!A1	0.0100	ZN(HL)	0.0010	0.0261

LEAKAGE POWER

When Condition	Power (nW)
!A1&!A2	0.1265
A1&A2	0.2127
!A1&A2	0.2063
A1&!A2	0.1304

gf180mcu_fd_sc_mcu7t5v0__xnor2_2

gf180mcu_fd_sc_mcu7t5v0__xnor2_2 symbol

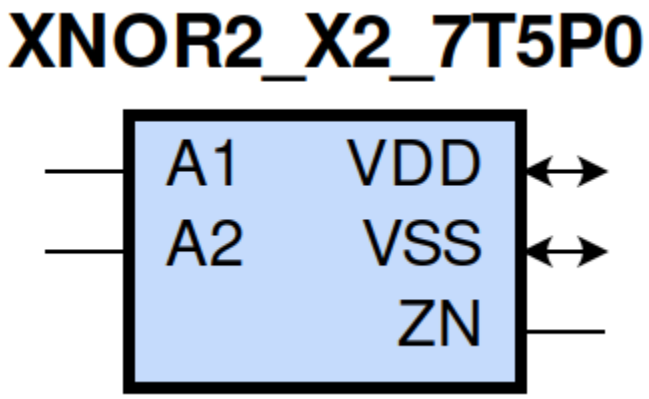

gf180mcu_fd_sc_mcu7t5v0__xnor2_2 schematic

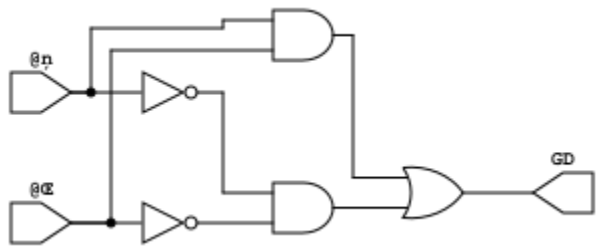

gf180mcu_fd_sc_mcu7t5v0__xnor2_2 layout

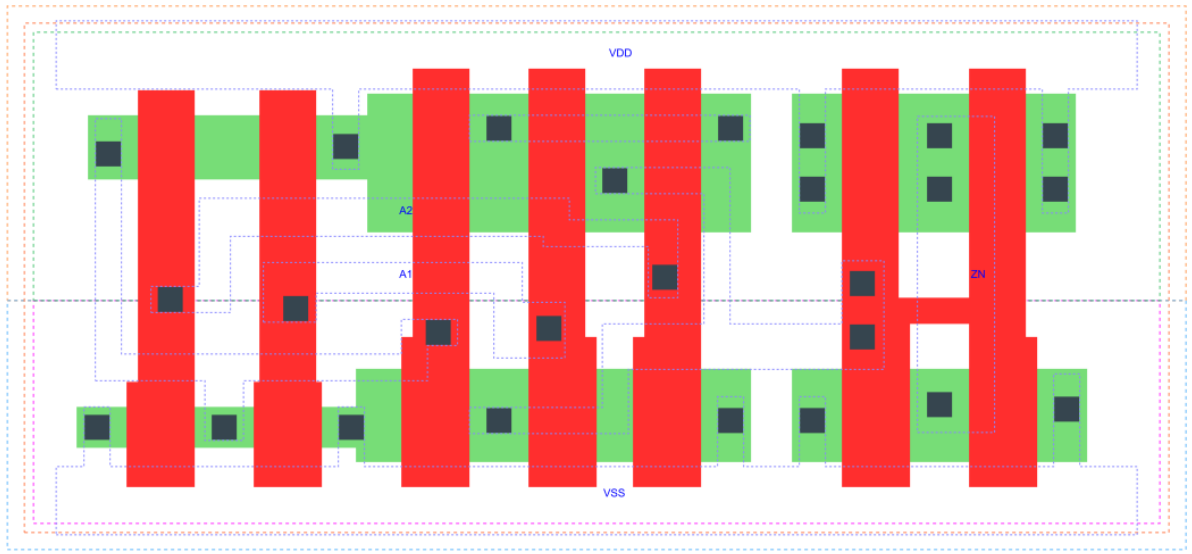

XNOR2_X2 is a 2-input exclusive NOR, 2X drive strength

Attributes

Attribute	Value
area	37.318400 μm^2

OUTPUT FUNCTIONS

Output Pin	Function
ZN	(!(A1^A2))

TRUTH TABLE FOR ZN

A1	A2	ZN
1	1	1
0	0	1
1	0	0
0	1	0

FUNCTIONAL SCHEMATIC

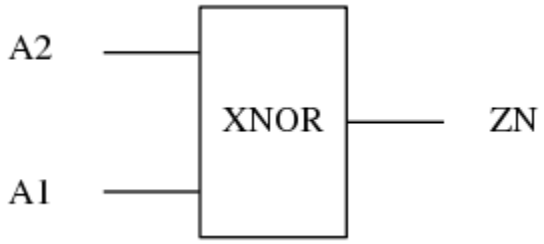

PIN CAPACITANCE (pf)

Pin	Type	Capacitance (pf)
A2	input	0.0074
A1	input	0.0075

DELAY AND OUTPUT TRANSITION TIME corresponding to min slew and load

Input Pin	Output	When Condition	Tin (ns)	Out Load (pf)	Delay (ns)	Tout (ns)
A2(LH)	ZN(LH)	A1	0.0100	0.0010	0.2069	0.0361
A2(HL)	ZN(LH)	!A1	0.0100	0.0010	0.5024	0.0345
A2(HL)	ZN(HL)	A1	0.0100	0.0010	0.2820	0.0502
A2(LH)	ZN(HL)	!A1	0.0100	0.0010	0.3934	0.0455
A1(HL)	ZN(LH)	!A2	0.0100	0.0010	0.5312	0.0347
A1(HL)	ZN(HL)	A2	0.0100	0.0010	0.2541	0.0454
A1(LH)	ZN(HL)	!A2	0.0100	0.0010	0.4432	0.0500
A1(LH)	ZN(LH)	A2	0.0100	0.0010	0.1954	0.0361

DYNAMIC ENERGY

Input Pin	When Condition	Tin (ns)	Output	Out Load (pf)	Energy (uW/MHz)
A2	A1	0.0100	ZN(LH)	0.0010	0.2058
A2	!A1	0.0100	ZN(LH)	0.0010	0.4985
A1	!A2	0.0100	ZN(LH)	0.0010	0.5156
A1	A2	0.0100	ZN(LH)	0.0010	0.1957
A1	A2	0.0100	ZN(HL)	0.0010	0.4303
A1	!A2	0.0100	ZN(HL)	0.0010	0.5152
A2	A1	0.0100	ZN(HL)	0.0010	0.4818
A2	!A1	0.0100	ZN(HL)	0.0010	0.4432

LEAKAGE POWER

When Condition	Power (nW)
!A1&!A2	0.2613
A1&A2	0.1800
!A1&A2	0.1800
A1&!A2	0.2559

gf180mcu_fd_sc_mcu7t5v0__xnor2_4

gf180mcu_fd_sc_mcu7t5v0__xnor2_4 symbol

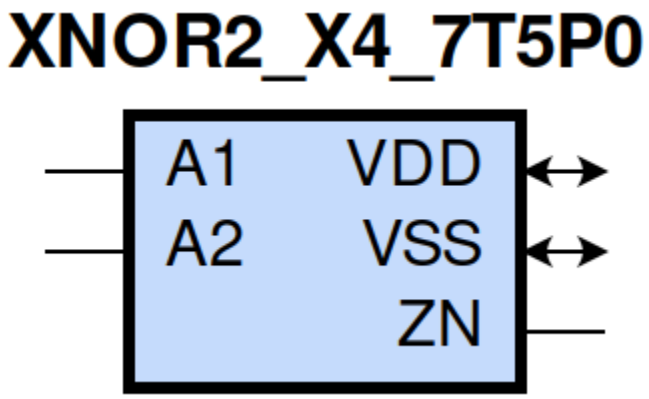

gf180mcu_fd_sc_mcu7t5v0__xnor2_4 schematic

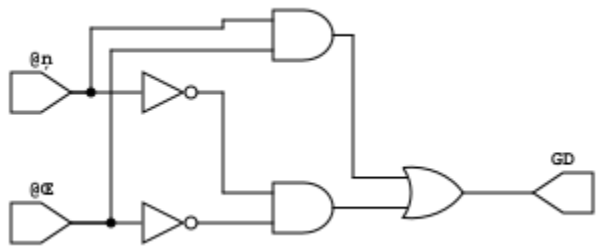

gf180mcu_fd_sc_mcu7t5v0__xnor2_4 layout

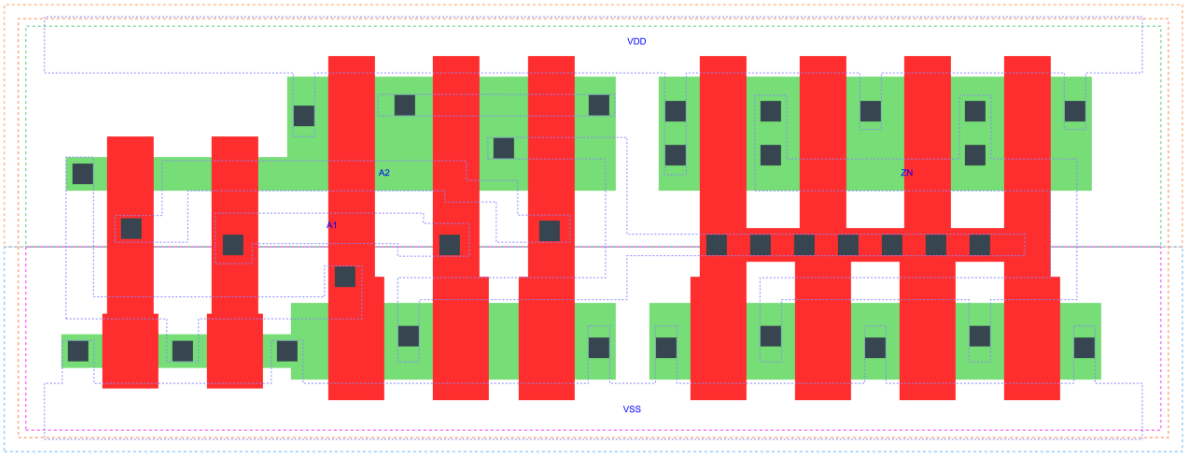

XNOR2_X4 is a 2-input exclusive NOR, 4X drive strength

Attributes

Attribute	Value
area	46.099200 μm^2

OUTPUT FUNCTIONS

Output Pin	Function
ZN	(!(A1^A2))

TRUTH TABLE FOR ZN

A1	A2	ZN
1	1	1
0	0	1
1	0	0
0	1	0

FUNCTIONAL SCHEMATIC

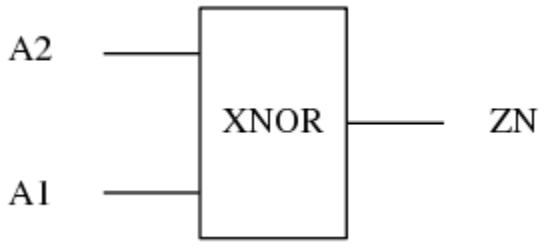

PIN CAPACITANCE (pf)

Pin	Type	Capacitance (pf)
A2	input	0.0071
A1	input	0.0070

DELAY AND OUTPUT TRANSITION TIME corresponding to min slew and load

Input Pin	Output	When Condition	Tin (ns)	Out Load (pf)	Delay (ns)	Tout (ns)
A2(LH)	ZN(LH)	A1	0.0100	0.0010	0.2917	0.0456
A2(HL)	ZN(LH)	!A1	0.0100	0.0010	0.7069	0.0431
A2(HL)	ZN(HL)	A1	0.0100	0.0010	0.4011	0.0683
A2(LH)	ZN(HL)	!A1	0.0100	0.0010	0.5097	0.0646
A1(HL)	ZN(LH)	!A2	0.0100	0.0010	0.7386	0.0431
A1(HL)	ZN(HL)	A2	0.0100	0.0010	0.3752	0.0646
A1(LH)	ZN(HL)	!A2	0.0100	0.0010	0.5488	0.0683
A1(LH)	ZN(LH)	A2	0.0100	0.0010	0.2801	0.0453

DYNAMIC ENERGY

Input Pin	When Condition	Tin (ns)	Output	Out Load (pf)	Energy (uW/MHz)
A2	A1	0.0100	ZN(LH)	0.0010	0.5269
A2	!A1	0.0100	ZN(LH)	0.0010	0.8341
A1	!A2	0.0100	ZN(LH)	0.0010	0.8459
A1	A2	0.0100	ZN(LH)	0.0010	0.5195
A1	A2	0.0100	ZN(HL)	0.0010	0.9202
A1	!A2	0.0100	ZN(HL)	0.0010	1.0265
A2	A1	0.0100	ZN(HL)	0.0010	0.9955
A2	!A1	0.0100	ZN(HL)	0.0010	0.9388

LEAKAGE POWER

When Condition	Power (nW)
!A1&!A2	0.3122
A1&A2	0.2307
!A1&A2	0.2328
A1&!A2	0.3090

gf180mcu_fd_sc_mcu7t5v0__xnor3_1

gf180mcu_fd_sc_mcu7t5v0__xnor3_1 symbol

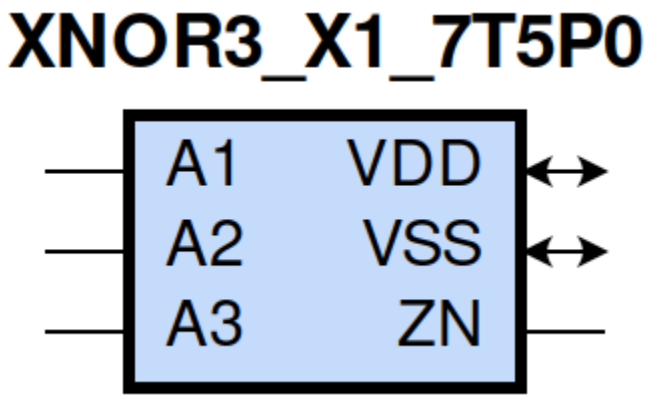

gf180mcu_fd_sc_mcu7t5v0__xnor3_1 schematic

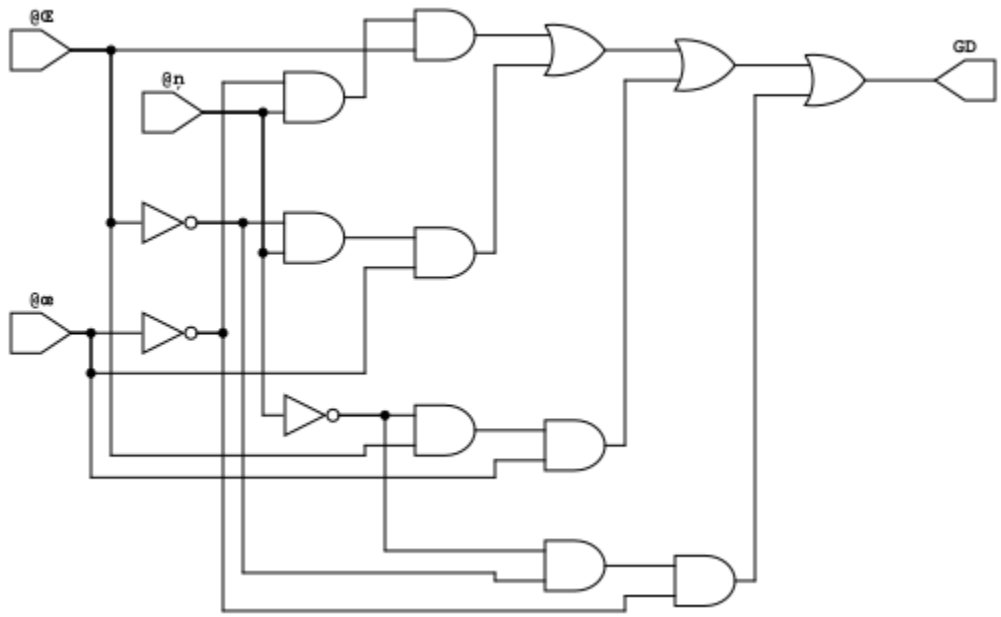

gf180mcu_fd_sc_mcu7t5v0__xnor3_1 layout

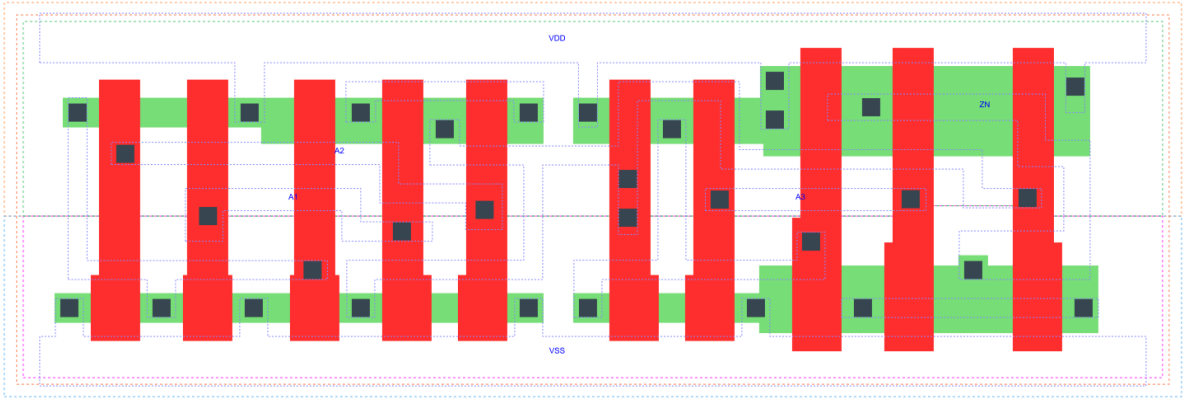

XNOR3_X1 is a 3-input exclusive NOR, 1X drive strength

Attributes

Attribute	Value
area	52.684800 μm^2

OUTPUT FUNCTIONS

Output Pin	Function
ZN	(!(A1^A2^A3))

TRUTH TABLE FOR ZN

A1	A2	A3	ZN
1	1	0	1
1	0	1	1
0	1	1	1
0	0	0	1
1	1	1	0
1	0	0	0
0	1	0	0
0	0	1	0

FUNCTIONAL SCHEMATIC

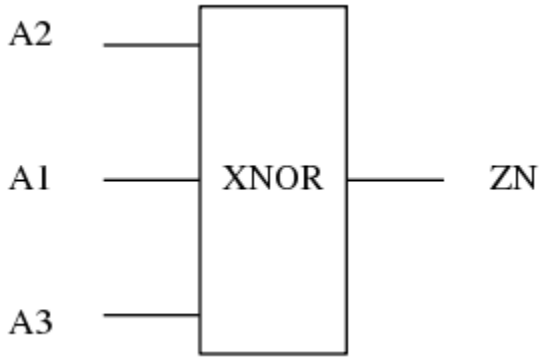

PIN CAPACITANCE (pf)

Pin	Type	Capacitance (pf)
A2	input	0.0052
A1	input	0.0052
A3	input	0.0069

DELAY AND OUTPUT TRANSITION TIME corresponding to min slew and load

Input Pin	Output	When Condition	Tin (ns)	Out Load (pf)	Delay (ns)	Tout (ns)
A2(LH)	ZN(LH)	!A1&A3	0.0100	0.0010	0.9076	0.1025
A2(LH)	ZN(LH)	A1&!A3	0.0100	0.0010	0.4111	0.1175
A2(HL)	ZN(LH)	!A1&!A3	0.0100	0.0010	0.7052	0.1130
A2(HL)	ZN(LH)	A1&A3	0.0100	0.0010	0.8102	0.1025
A2(HL)	ZN(HL)	!A1&A3	0.0100	0.0010	0.8068	0.0595
A2(HL)	ZN(HL)	A1&!A3	0.0100	0.0010	0.5353	0.1330
A2(LH)	ZN(HL)	!A1&!A3	0.0100	0.0010	0.6377	0.1264
A2(LH)	ZN(HL)	A1&A3	0.0100	0.0010	0.5158	0.0609
A1(HL)	ZN(LH)	!A2&!A3	0.0100	0.0010	0.7363	0.1130
A1(HL)	ZN(LH)	A2&A3	0.0100	0.0010	0.7766	0.1022
A1(HL)	ZN(HL)	!A2&A3	0.0100	0.0010	0.8380	0.0594
A1(HL)	ZN(HL)	A2&!A3	0.0100	0.0010	0.5065	0.1267
A1(LH)	ZN(HL)	!A2&!A3	0.0100	0.0010	0.6752	0.1330
A1(LH)	ZN(HL)	A2&A3	0.0100	0.0010	0.5045	0.0607
A1(LH)	ZN(LH)	!A2&A3	0.0100	0.0010	0.9498	0.1024
A1(LH)	ZN(LH)	A2&!A3	0.0100	0.0010	0.3997	0.1176
A3(LH)	ZN(HL)	!A1&!A2	0.0100	0.0010	0.0675	0.0436
A3(LH)	ZN(HL)	A1&A2	0.0100	0.0010	0.0675	0.0435
A3(HL)	ZN(HL)	!A1&A2	0.0100	0.0010	0.2827	0.0738
A3(HL)	ZN(HL)	A1&!A2	0.0100	0.0010	0.2827	0.0738
A3(LH)	ZN(LH)	!A1&A2	0.0100	0.0010	0.3179	0.1044
A3(LH)	ZN(LH)	A1&!A2	0.0100	0.0010	0.3180	0.1044
A3(HL)	ZN(LH)	!A1&!A2	0.0100	0.0010	0.1348	0.1042
A3(HL)	ZN(LH)	A1&A2	0.0100	0.0010	0.1348	0.1040

DYNAMIC ENERGY

Input Pin	When Condition	Tin (ns)	Output	Out Load (pf)	Energy (uW/MHz)
A2	!A1&A3	0.0100	ZN(LH)	0.0010	0.5059
A2	A1&!A3	0.0100	ZN(LH)	0.0010	0.1906
A2	!A1&!A3	0.0100	ZN(LH)	0.0010	0.3581
A2	A1&A3	0.0100	ZN(LH)	0.0010	0.5132
A1	!A2&!A3	0.0100	ZN(LH)	0.0010	0.3689
A1	A2&A3	0.0100	ZN(LH)	0.0010	0.4942
A1	!A2&A3	0.0100	ZN(LH)	0.0010	0.5353
A1	A2&!A3	0.0100	ZN(LH)	0.0010	0.1838
A1	!A2&A3	0.0100	ZN(HL)	0.0010	0.4053
A1	A2&!A3	0.0100	ZN(HL)	0.0010	0.3449
A1	!A2&!A3	0.0100	ZN(HL)	0.0010	0.3890
A1	A2&A3	0.0100	ZN(HL)	0.0010	0.2205
A3	!A1&!A2	0.0100	ZN(HL)	0.0010	-0.0065
A3	A1&A2	0.0100	ZN(HL)	0.0010	-0.0066
A3	!A1&A2	0.0100	ZN(HL)	0.0010	0.2712
A3	A1&!A2	0.0100	ZN(HL)	0.0010	0.2712
A2	!A1&A3	0.0100	ZN(HL)	0.0010	0.3944
A2	A1&!A3	0.0100	ZN(HL)	0.0010	0.3666
A2	!A1&!A3	0.0100	ZN(HL)	0.0010	0.3575
A2	A1&A3	0.0100	ZN(HL)	0.0010	0.2272
A3	!A1&A2	0.0100	ZN(LH)	0.0010	0.2237
A3	A1&!A2	0.0100	ZN(LH)	0.0010	0.2239
A3	!A1&!A2	0.0100	ZN(LH)	0.0010	0.1545
A3	A1&A2	0.0100	ZN(LH)	0.0010	0.1544

LEAKAGE POWER

When Condition	Power (nW)
!A1&!A2&!A3	0.2871
!A1&A2&A3	0.2938
A1&!A2&A3	0.3702
A1&A2&!A3	0.2046
!A1&!A2&A3	0.2910
!A1&A2&!A3	0.2874
A1&!A2&!A3	0.3639
A1&A2&A3	0.2085

gf180mcu_fd_sc_mcu7t5v0__xnor3_2

gf180mcu_fd_sc_mcu7t5v0__xnor3_2 symbol

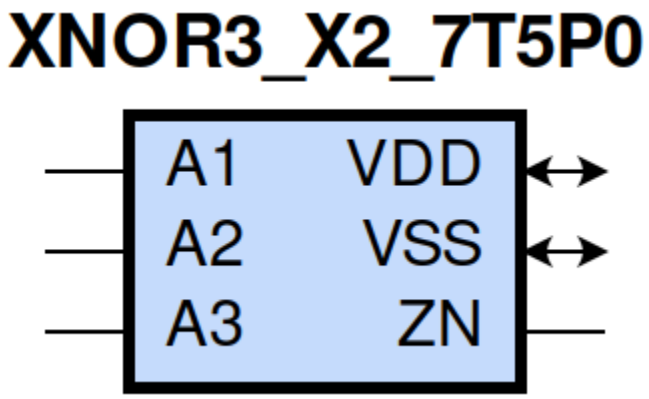

gf180mcu_fd_sc_mcu7t5v0__xnor3_2 schematic

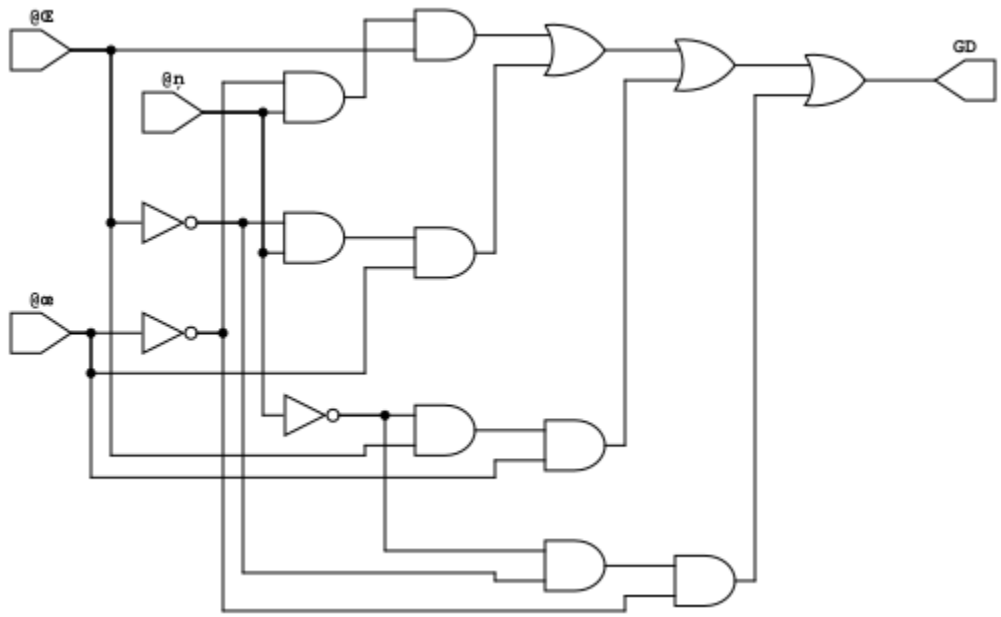

gf180mcu_fd_sc_mcu7t5v0__xnor3_2 layout

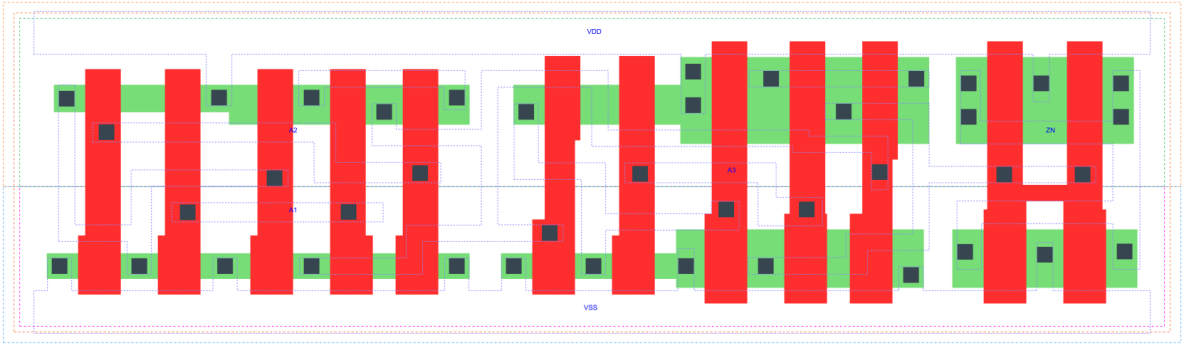

XNOR3_X2 is a 3-input exclusive NOR, 2X drive strength

Attributes

Attribute	Value
area	61.465600 μm^2

OUTPUT FUNCTIONS

Output Pin	Function
ZN	(!(A1^A2^A3))

TRUTH TABLE FOR ZN

A1	A2	A3	ZN
1	1	0	1
1	0	1	1
0	1	1	1
0	0	0	1
1	1	1	0
1	0	0	0
0	1	0	0
0	0	1	0

FUNCTIONAL SCHEMATIC

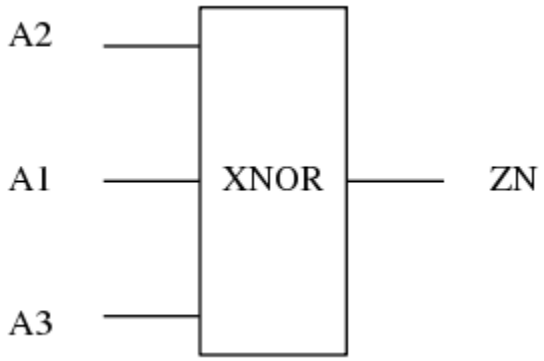

PIN CAPACITANCE (pf)

Pin	Type	Capacitance (pf)
A2	input	0.0051
A1	input	0.0050
A3	input	0.0074

DELAY AND OUTPUT TRANSITION TIME corresponding to min slew and load

Input Pin	Output	When Condition	Tin (ns)	Out Load (pf)	Delay (ns)	Tout (ns)
A2(LH)	ZN(LH)	!A1&A3	0.0100	0.0010	0.7896	0.0500
A2(LH)	ZN(LH)	A1&!A3	0.0100	0.0010	0.8265	0.0428
A2(HL)	ZN(LH)	!A1&!A3	0.0100	0.0010	1.1032	0.0428
A2(HL)	ZN(LH)	A1&A3	0.0100	0.0010	0.6853	0.0506
A2(HL)	ZN(HL)	!A1&A3	0.0100	0.0010	0.8683	0.0593
A2(HL)	ZN(HL)	A1&!A3	0.0100	0.0010	0.8582	0.0540
A2(LH)	ZN(HL)	!A1&!A3	0.0100	0.0010	0.9639	0.0541
A2(LH)	ZN(HL)	A1&A3	0.0100	0.0010	0.5885	0.0599
A1(HL)	ZN(LH)	!A2&!A3	0.0100	0.0010	1.1344	0.0427
A1(HL)	ZN(LH)	A2&A3	0.0100	0.0010	0.6552	0.0502
A1(HL)	ZN(HL)	!A2&A3	0.0100	0.0010	0.8995	0.0591
A1(HL)	ZN(HL)	A2&!A3	0.0100	0.0010	0.8300	0.0540
A1(LH)	ZN(HL)	!A2&!A3	0.0100	0.0010	1.0035	0.0540
A1(LH)	ZN(HL)	A2&A3	0.0100	0.0010	0.5774	0.0599
A1(LH)	ZN(LH)	!A2&A3	0.0100	0.0010	0.8296	0.0511
A1(LH)	ZN(LH)	A2&!A3	0.0100	0.0010	0.8154	0.0427
A3(LH)	ZN(HL)	!A1&!A2	0.0100	0.0010	0.4674	0.0589
A3(LH)	ZN(HL)	A1&A2	0.0100	0.0010	0.4679	0.0591
A3(HL)	ZN(HL)	!A1&A2	0.0100	0.0010	0.2748	0.0539
A3(HL)	ZN(HL)	A1&!A2	0.0100	0.0010	0.2748	0.0539
A3(LH)	ZN(LH)	!A1&A2	0.0100	0.0010	0.2128	0.0446
A3(LH)	ZN(LH)	A1&!A2	0.0100	0.0010	0.2128	0.0446
A3(HL)	ZN(LH)	!A1&!A2	0.0100	0.0010	0.5531	0.0425
A3(HL)	ZN(LH)	A1&A2	0.0100	0.0010	0.5541	0.0426

DYNAMIC ENERGY

Input Pin	When Condition	Tin (ns)	Output	Out Load (pf)	Energy (uW/MHz)
A2	!A1&A3	0.0100	ZN(LH)	0.0010	0.6100
A2	A1&!A3	0.0100	ZN(LH)	0.0010	0.5461
A2	!A1&!A3	0.0100	ZN(LH)	0.0010	0.7171
A2	A1&A3	0.0100	ZN(LH)	0.0010	0.6226
A1	!A2&!A3	0.0100	ZN(LH)	0.0010	0.7281
A1	A2&A3	0.0100	ZN(LH)	0.0010	0.5976
A1	!A2&A3	0.0100	ZN(LH)	0.0010	0.6451
A1	A2&!A3	0.0100	ZN(LH)	0.0010	0.5391
A1	!A2&A3	0.0100	ZN(HL)	0.0010	0.7023
A1	A2&!A3	0.0100	ZN(HL)	0.0010	0.7439
A1	!A2&!A3	0.0100	ZN(HL)	0.0010	0.7856
A1	A2&A3	0.0100	ZN(HL)	0.0010	0.5164
A3	!A1&!A2	0.0100	ZN(HL)	0.0010	0.5353
A3	A1&A2	0.0100	ZN(HL)	0.0010	0.5360
A3	!A1&A2	0.0100	ZN(HL)	0.0010	0.4458
A3	A1&!A2	0.0100	ZN(HL)	0.0010	0.4458
A2	!A1&A3	0.0100	ZN(HL)	0.0010	0.6912
A2	A1&!A3	0.0100	ZN(HL)	0.0010	0.7627
A2	!A1&!A3	0.0100	ZN(HL)	0.0010	0.7561
A2	A1&A3	0.0100	ZN(HL)	0.0010	0.5233
A3	!A1&A2	0.0100	ZN(LH)	0.0010	0.2352
A3	A1&!A2	0.0100	ZN(LH)	0.0010	0.2352
A3	!A1&!A2	0.0100	ZN(LH)	0.0010	0.5528
A3	A1&A2	0.0100	ZN(LH)	0.0010	0.5532

LEAKAGE POWER

When Condition	Power (nW)
!A1&!A2&!A3	0.4219
!A1&A2&A3	0.2611
A1&!A2&A3	0.3375
A1&A2&!A3	0.3395
!A1&!A2&A3	0.4165
!A1&A2&!A3	0.2611
A1&!A2&!A3	0.3375
A1&A2&A3	0.3341

gf180mcu_fd_sc_mcu7t5v0__xnor3_4

gf180mcu_fd_sc_mcu7t5v0__xnor3_4 symbol

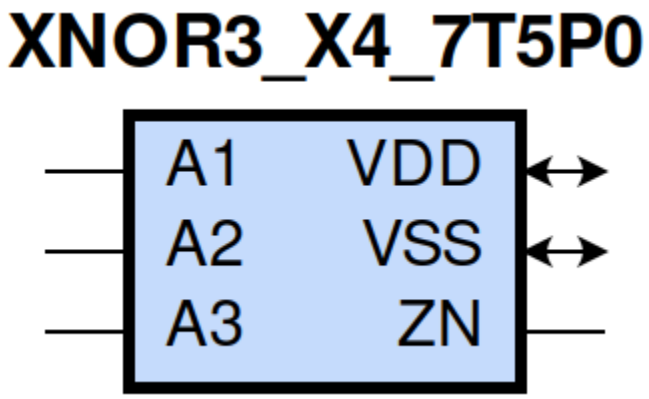

gf180mcu_fd_sc_mcu7t5v0__xnor3_4 schematic

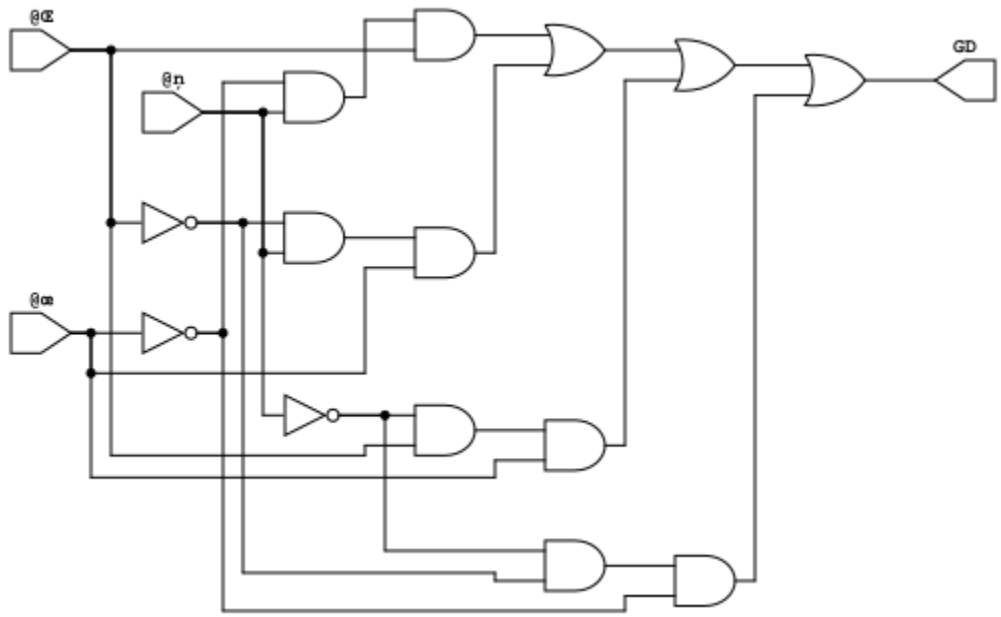

gf180mcu_fd_sc_mcu7t5v0__xnor3_4 layout

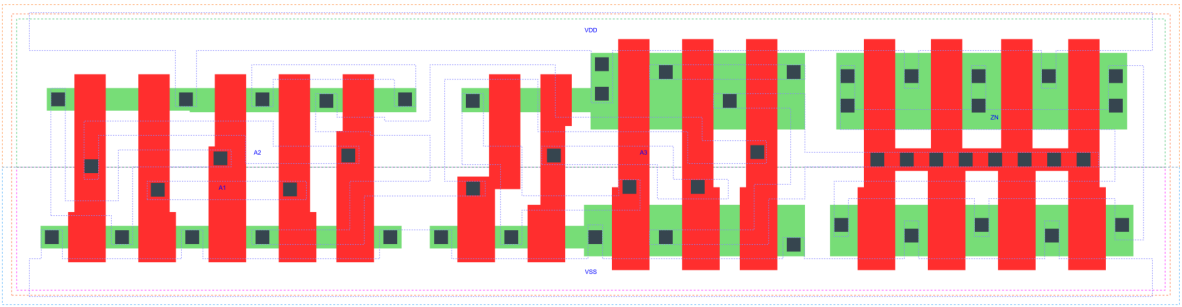

XNOR3_X4 is a 3-input exclusive NOR, 4X drive strength

Attributes

Attribute	Value
area	70.246400 μm^2

OUTPUT FUNCTIONS

Output Pin	Function
ZN	(!(A1^A2^A3))

TRUTH TABLE FOR ZN

A1	A2	A3	ZN
1	1	0	1
1	0	1	1
0	1	1	1
0	0	0	1
1	1	1	0
1	0	0	0
0	1	0	0
0	0	1	0

FUNCTIONAL SCHEMATIC

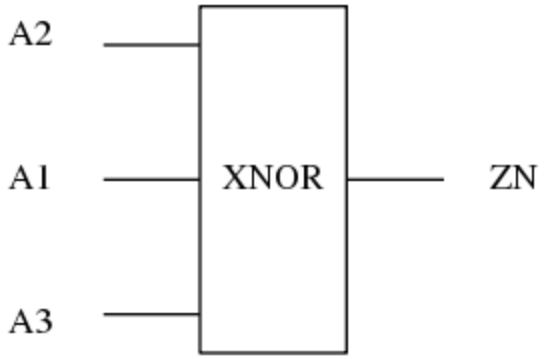

PIN CAPACITANCE (pf)

Pin	Type	Capacitance (pf)
A2	input	0.0049
A1	input	0.0046
A3	input	0.0072

DELAY AND OUTPUT TRANSITION TIME corresponding to min slew and load

Input Pin	Output	When Condition	Tin (ns)	Out Load (pf)	Delay (ns)	Tout (ns)
A2(LH)	ZN(LH)	!A1&A3	0.0100	0.0010	1.0508	0.0572
A2(LH)	ZN(LH)	A1&!A3	0.0100	0.0010	0.9935	0.0467
A2(HL)	ZN(LH)	!A1&!A3	0.0100	0.0010	1.2666	0.0465
A2(HL)	ZN(LH)	A1&A3	0.0100	0.0010	0.9418	0.0581
A2(HL)	ZN(HL)	!A1&A3	0.0100	0.0010	0.9648	0.0742
A2(HL)	ZN(HL)	A1&!A3	0.0100	0.0010	1.0718	0.0696
A2(LH)	ZN(HL)	!A1&!A3	0.0100	0.0010	1.1887	0.0698
A2(LH)	ZN(HL)	A1&A3	0.0100	0.0010	0.6882	0.0747
A1(HL)	ZN(LH)	!A2&!A3	0.0100	0.0010	1.2961	0.0463
A1(HL)	ZN(LH)	A2&A3	0.0100	0.0010	0.8985	0.0571
A1(HL)	ZN(HL)	!A2&A3	0.0100	0.0010	0.9945	0.0742
A1(HL)	ZN(HL)	A2&!A3	0.0100	0.0010	1.0368	0.0694
A1(LH)	ZN(HL)	!A2&!A3	0.0100	0.0010	1.2343	0.0697
A1(LH)	ZN(HL)	A2&A3	0.0100	0.0010	0.6773	0.0745
A1(LH)	ZN(LH)	!A2&A3	0.0100	0.0010	1.1032	0.0584
A1(LH)	ZN(LH)	A2&!A3	0.0100	0.0010	0.9824	0.0466
A3(LH)	ZN(HL)	!A1&!A2	0.0100	0.0010	0.5658	0.0741
A3(LH)	ZN(HL)	A1&A2	0.0100	0.0010	0.5672	0.0742
A3(HL)	ZN(HL)	!A1&A2	0.0100	0.0010	0.3901	0.0698
A3(HL)	ZN(HL)	A1&!A2	0.0100	0.0010	0.3902	0.0699
A3(LH)	ZN(LH)	!A1&A2	0.0100	0.0010	0.2918	0.0503
A3(LH)	ZN(LH)	A1&!A2	0.0100	0.0010	0.2918	0.0503
A3(HL)	ZN(LH)	!A1&!A2	0.0100	0.0010	0.7270	0.0465
A3(HL)	ZN(LH)	A1&A2	0.0100	0.0010	0.7275	0.0471

DYNAMIC ENERGY

Input Pin	When Condition	Tin (ns)	Output	Out Load (pf)	Energy (uW/MHz)
A2	!A1&A3	0.0100	ZN(LH)	0.0010	0.9995
A2	A1&!A3	0.0100	ZN(LH)	0.0010	0.8625
A2	!A1&!A3	0.0100	ZN(LH)	0.0010	1.0189
A2	A1&A3	0.0100	ZN(LH)	0.0010	1.0218
A1	!A2&!A3	0.0100	ZN(LH)	0.0010	1.0291
A1	A2&A3	0.0100	ZN(LH)	0.0010	0.9866
A1	!A2&A3	0.0100	ZN(LH)	0.0010	1.0452
A1	A2&!A3	0.0100	ZN(LH)	0.0010	0.8557
A1	!A2&A3	0.0100	ZN(HL)	0.0010	1.1980
A1	A2&!A3	0.0100	ZN(HL)	0.0010	1.2303
A1	!A2&!A3	0.0100	ZN(HL)	0.0010	1.2718
A1	A2&A3	0.0100	ZN(HL)	0.0010	1.0286
A3	!A1&!A2	0.0100	ZN(HL)	0.0010	1.0466
A3	A1&A2	0.0100	ZN(HL)	0.0010	1.0483
A3	!A1&A2	0.0100	ZN(HL)	0.0010	0.9377
A3	A1&!A2	0.0100	ZN(HL)	0.0010	0.9378
A2	!A1&A3	0.0100	ZN(HL)	0.0010	1.1876
A2	A1&!A3	0.0100	ZN(HL)	0.0010	1.2490
A2	!A1&!A3	0.0100	ZN(HL)	0.0010	1.2427
A2	A1&A3	0.0100	ZN(HL)	0.0010	1.0352
A3	!A1&A2	0.0100	ZN(LH)	0.0010	0.5528
A3	A1&!A2	0.0100	ZN(LH)	0.0010	0.5528
A3	!A1&!A2	0.0100	ZN(LH)	0.0010	0.8678
A3	A1&A2	0.0100	ZN(LH)	0.0010	0.8681

LEAKAGE POWER

When Condition	Power (nW)
!A1&!A2&!A3	0.4730
!A1&A2&A3	0.3119
A1&!A2&A3	0.3883
A1&A2&!A3	0.3901
!A1&!A2&A3	0.4697
!A1&A2&!A3	0.3140
A1&!A2&!A3	0.3904
A1&A2&A3	0.3869

gf180mcu_fd_sc_mcu7t5v0__xor2_1

gf180mcu_fd_sc_mcu7t5v0__xor2_1 symbol

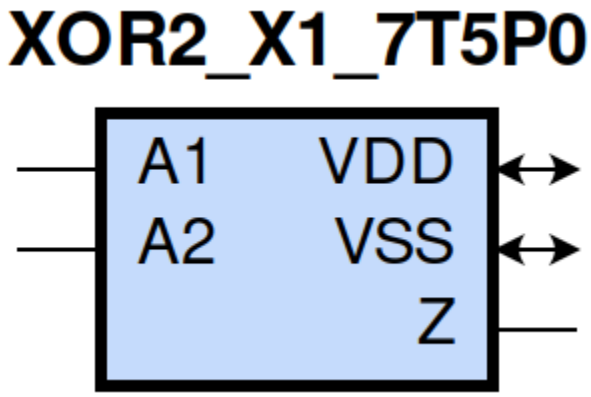

gf180mcu_fd_sc_mcu7t5v0__xor2_1 schematic

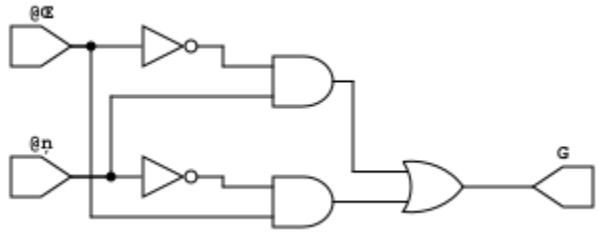

gf180mcu_fd_sc_mcu7t5v0__xor2_1 layout

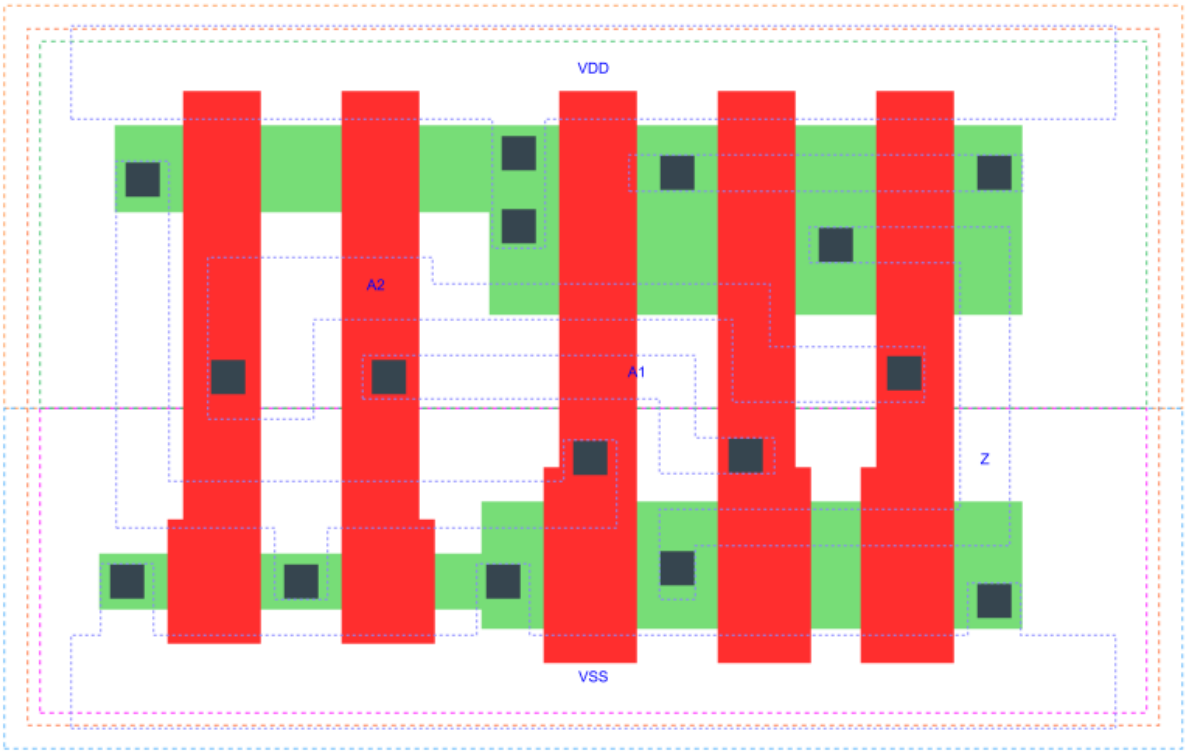

XOR2_X1 is a 2-input exclusive OR, 1X drive strength

Attributes

Attribute	Value
area	26.342400 μm^2

OUTPUT FUNCTIONS

Output Pin	Function
Z	(A1^A2)

TRUTH TABLE FOR Z

A1	A2	Z
1	0	1
0	1	1
1	1	0
0	0	0

FUNCTIONAL SCHEMATIC

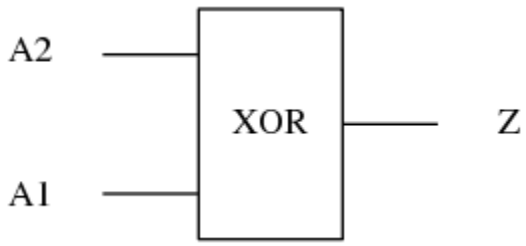

PIN CAPACITANCE (pf)

Pin	Type	Capacitance (pf)
A2	input	0.0075
A1	input	0.0075

DELAY AND OUTPUT TRANSITION TIME corresponding to min slew and load

Input Pin	Output	When Condition	Tin (ns)	Out Load (pf)	Delay (ns)	Tout (ns)
A2(HL)	Z(HL)	!A1	0.0100	0.0010	0.3753	0.0902
A2(LH)	Z(LH)	!A1	0.0100	0.0010	0.2481	0.0905
A2(HL)	Z(LH)	A1	0.0100	0.0010	0.1369	0.1151
A2(LH)	Z(HL)	A1	0.0100	0.0010	0.0769	0.0389
A1(LH)	Z(HL)	A2	0.0100	0.0010	0.0655	0.0389
A1(HL)	Z(LH)	A2	0.0100	0.0010	0.1055	0.0847
A1(LH)	Z(LH)	!A2	0.0100	0.0010	0.3016	0.1182
A1(HL)	Z(HL)	!A2	0.0100	0.0010	0.4031	0.0897

DYNAMIC ENERGY

Input Pin	When Condition	Tin (ns)	Output	Out Load (pf)	Energy (uW/MHz)
A2	!A1	0.0100	Z(HL)	0.0010	0.2922
A2	A1	0.0100	Z(HL)	0.0010	-0.0010
A1	A2	0.0100	Z(HL)	0.0010	-0.0109
A1	!A2	0.0100	Z(HL)	0.0010	0.3092
A2	!A1	0.0100	Z(LH)	0.0010	0.1582
A2	A1	0.0100	Z(LH)	0.0010	0.1766
A1	A2	0.0100	Z(LH)	0.0010	0.1445
A1	!A2	0.0100	Z(LH)	0.0010	0.2110

LEAKAGE POWER

When Condition	Power (nW)
!A1&!A2	0.2104
A1&A2	0.1291
!A1&A2	0.1270
A1&!A2	0.2029

gf180mcu_fd_sc_mcu7t5v0__xor2_2

gf180mcu_fd_sc_mcu7t5v0__xor2_2 symbol

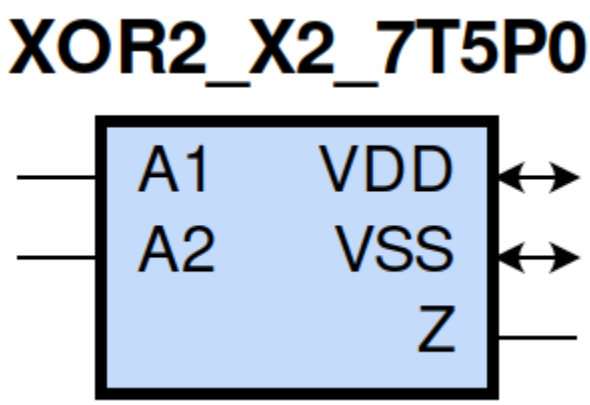

gf180mcu_fd_sc_mcu7t5v0__xor2_2 schematic

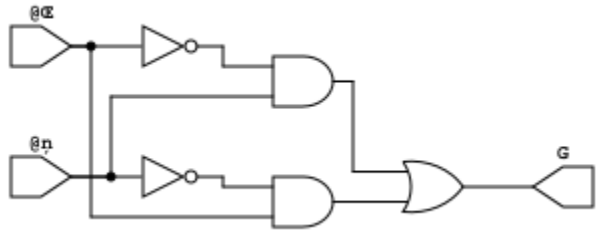

gf180mcu_fd_sc_mcu7t5v0__xor2_2 layout

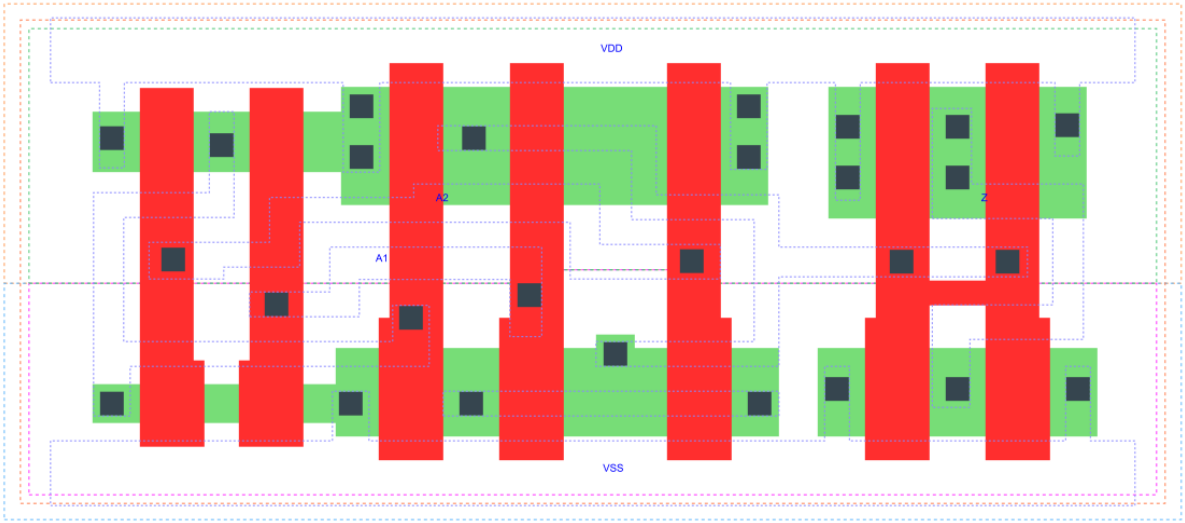

XOR2_X2 is a 2-input exclusive OR, 2X drive strength

Attributes

Attribute	Value
area	39.513600 μm^2

OUTPUT FUNCTIONS

Output Pin	Function
Z	(A1^A2)

TRUTH TABLE FOR Z

A1	A2	Z
1	0	1
0	1	1
1	1	0
0	0	0

FUNCTIONAL SCHEMATIC

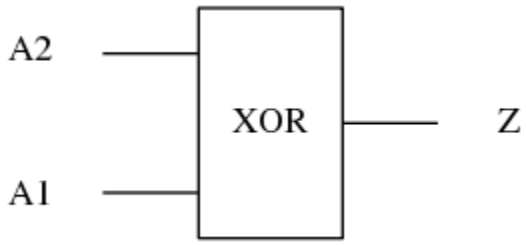

PIN CAPACITANCE (pf)

Pin	Type	Capacitance (pf)
A2	input	0.0073
A1	input	0.0072

DELAY AND OUTPUT TRANSITION TIME corresponding to min slew and load

Input Pin	Output	When Condition	Tin (ns)	Out Load (pf)	Delay (ns)	Tout (ns)
A2(HL)	Z(HL)	!A1	0.0100	0.0010	0.3279	0.0509
A2(LH)	Z(LH)	!A1	0.0100	0.0010	0.2313	0.0397
A2(HL)	Z(LH)	A1	0.0100	0.0010	0.3913	0.0387
A2(LH)	Z(HL)	A1	0.0100	0.0010	0.4186	0.0422
A1(LH)	Z(HL)	A2	0.0100	0.0010	0.4310	0.0422
A1(HL)	Z(LH)	A2	0.0100	0.0010	0.4353	0.0403
A1(LH)	Z(LH)	!A2	0.0100	0.0010	0.2008	0.0378
A1(HL)	Z(HL)	!A2	0.0100	0.0010	0.2967	0.0511

DYNAMIC ENERGY

Input Pin	When Condition	Tin (ns)	Output	Out Load (pf)	Energy (uW/MHz)
A2	!A1	0.0100	Z(HL)	0.0010	0.4901
A2	A1	0.0100	Z(HL)	0.0010	0.4775
A1	A2	0.0100	Z(HL)	0.0010	0.5002
A1	!A2	0.0100	Z(HL)	0.0010	0.4622
A2	!A1	0.0100	Z(LH)	0.0010	0.2543
A2	A1	0.0100	Z(LH)	0.0010	0.4423
A1	A2	0.0100	Z(LH)	0.0010	0.4916
A1	!A2	0.0100	Z(LH)	0.0010	0.2097

LEAKAGE POWER

When Condition	Power (nW)
!A1&!A2	0.1795
A1&A2	0.2657
!A1&A2	0.2572
A1&!A2	0.1813

gf180mcu_fd_sc_mcu7t5v0__xor2_4

gf180mcu_fd_sc_mcu7t5v0__xor2_4 symbol

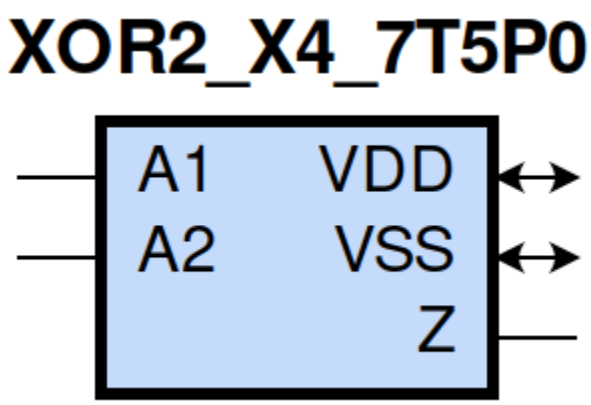

gf180mcu_fd_sc_mcu7t5v0__xor2_4 schematic

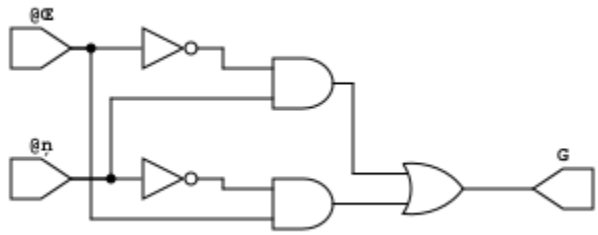

gf180mcu_fd_sc_mcu7t5v0__xor2_4 layout

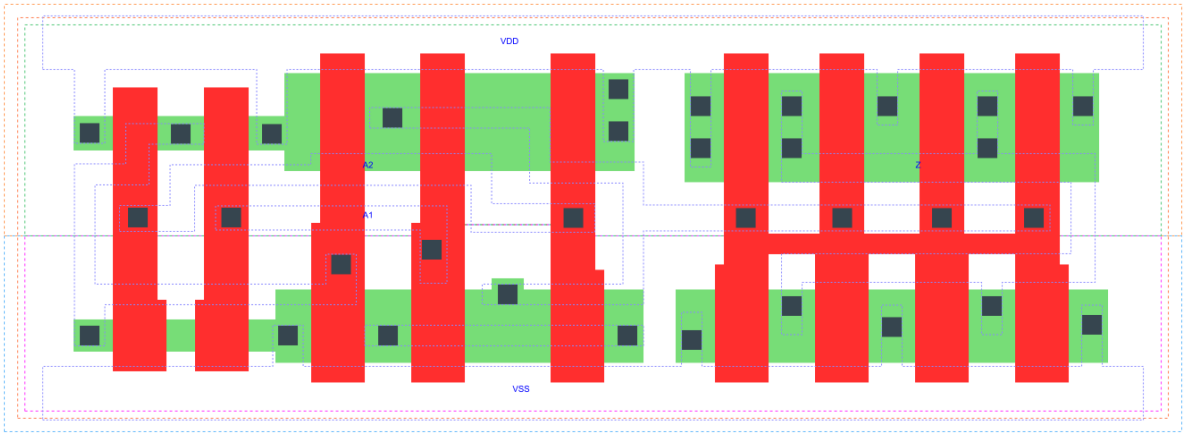

XOR2_X4 is a 2-input exclusive OR, 4X drive strength

Attributes

Attribute	Value
area	48.294400 μm^2

OUTPUT FUNCTIONS

Output Pin	Function
Z	(A1^A2)

TRUTH TABLE FOR Z

A1	A2	Z
1	0	1
0	1	1
1	1	0
0	0	0

FUNCTIONAL SCHEMATIC

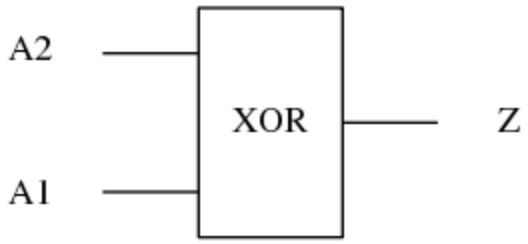

PIN CAPACITANCE (pf)

Pin	Type	Capacitance (pf)
A2	input	0.0072
A1	input	0.0069

DELAY AND OUTPUT TRANSITION TIME corresponding to min slew and load

Input Pin	Output	When Condition	Tin (ns)	Out Load (pf)	Delay (ns)	Tout (ns)
A2(HL)	Z(HL)	!A1	0.0100	0.0010	0.4620	0.0716
A2(LH)	Z(LH)	!A1	0.0100	0.0010	0.3166	0.0487
A2(HL)	Z(LH)	A1	0.0100	0.0010	0.5309	0.0473
A2(LH)	Z(HL)	A1	0.0100	0.0010	0.4790	0.0533
A1(LH)	Z(HL)	A2	0.0100	0.0010	0.4915	0.0533
A1(HL)	Z(LH)	A2	0.0100	0.0010	0.5835	0.0496
A1(LH)	Z(LH)	!A2	0.0100	0.0010	0.2845	0.0467
A1(HL)	Z(HL)	!A2	0.0100	0.0010	0.4310	0.0714

DYNAMIC ENERGY

Input Pin	When Condition	Tin (ns)	Output	Out Load (pf)	Energy (uW/MHz)
A2	!A1	0.0100	Z(HL)	0.0010	1.0327
A2	A1	0.0100	Z(HL)	0.0010	0.8639
A1	A2	0.0100	Z(HL)	0.0010	0.8872
A1	!A2	0.0100	Z(HL)	0.0010	1.0047
A2	!A1	0.0100	Z(LH)	0.0010	0.5960
A2	A1	0.0100	Z(LH)	0.0010	0.7672
A1	A2	0.0100	Z(LH)	0.0010	0.8320
A1	!A2	0.0100	Z(LH)	0.0010	0.5370

LEAKAGE POWER

When Condition	Power (nW)
!A1&!A2	0.2325
A1&A2	0.3184
!A1&A2	0.3081
A1&!A2	0.2322

gf180mcu_fd_sc_mcu7t5v0__xor3_4

gf180mcu_fd_sc_mcu7t5v0__xor3_4 symbol

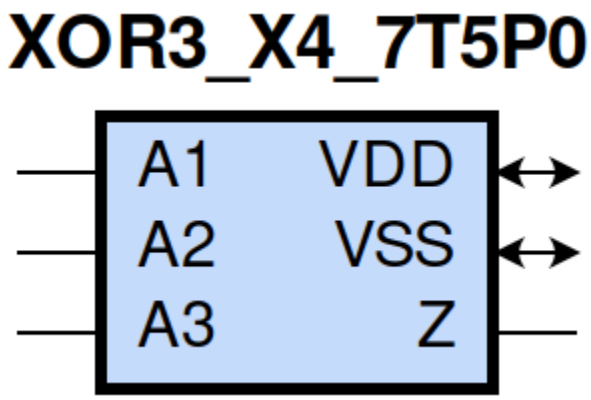

gf180mcu_fd_sc_mcu7t5v0__xor3_4 schematic

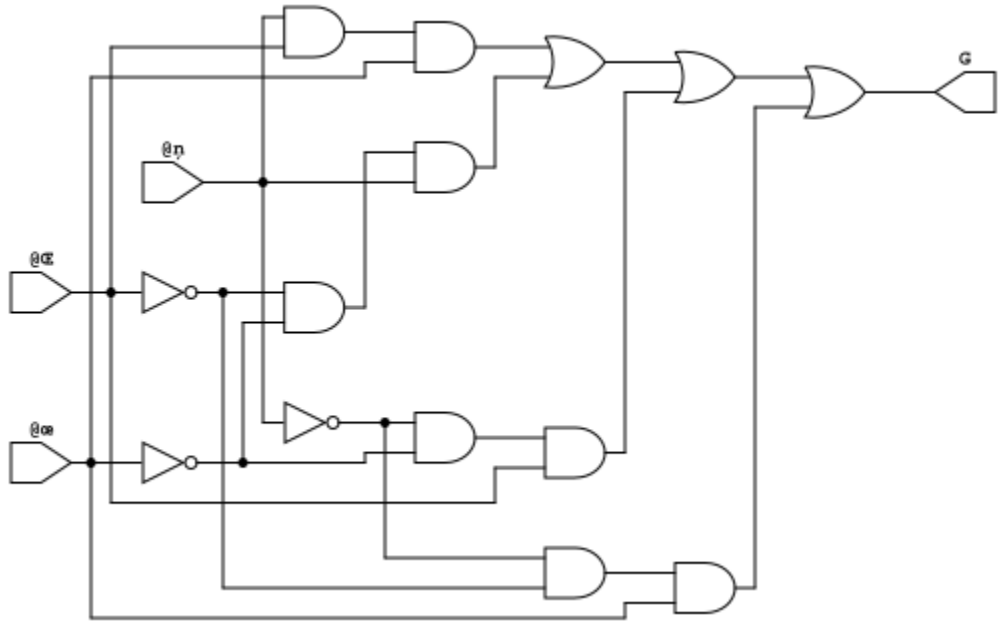

gf180mcu_fd_sc_mcu7t5v0__xor3_4 layout

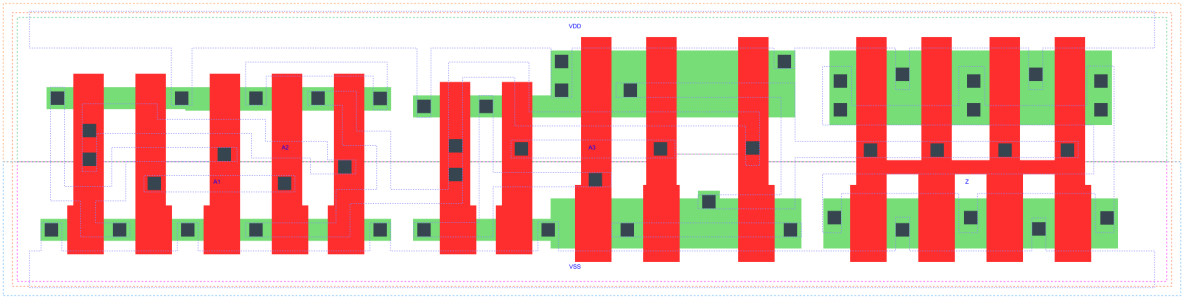

XOR3_X4 is a 3-input exclusive OR, 4X drive strength

Attributes

Attribute	Value
area	72.441600 μm^2

OUTPUT FUNCTIONS

Output Pin	Function
Z	(A1^A2^A3)

TRUTH TABLE FOR Z

A1	A2	A3	Z
1	1	1	1
1	0	0	1
0	1	0	1
0	0	1	1
1	1	0	0
1	0	1	0
0	1	1	0
0	0	0	0

FUNCTIONAL SCHEMATIC

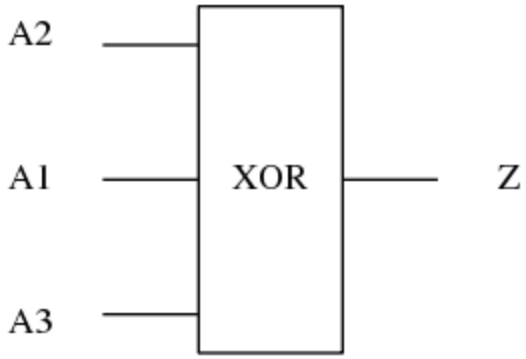

PIN CAPACITANCE (pf)

Pin	Type	Capacitance (pf)
A2	input	0.0049
A1	input	0.0046
A3	input	0.0068

DELAY AND OUTPUT TRANSITION TIME corresponding to min slew and load

Input Pin	Output	When Condition	Tin (ns)	Out Load (pf)	Delay (ns)	Tout (ns)
A2(HL)	Z(HL)	!A1&!A3	0.0100	0.0010	0.9860	0.0769
A2(HL)	Z(HL)	A1&A3	0.0100	0.0010	1.1225	0.0573
A2(LH)	Z(LH)	!A1&!A3	0.0100	0.0010	1.1069	0.0603
A2(LH)	Z(LH)	A1&A3	0.0100	0.0010	0.8180	0.0525
A2(HL)	Z(LH)	!A1&A3	0.0100	0.0010	1.0978	0.0527
A2(HL)	Z(LH)	A1&!A3	0.0100	0.0010	1.0096	0.0607
A2(LH)	Z(HL)	!A1&A3	0.0100	0.0010	1.2259	0.0572
A2(LH)	Z(HL)	A1&!A3	0.0100	0.0010	0.7040	0.0771
A1(LH)	Z(HL)	!A2&A3	0.0100	0.0010	1.2773	0.0573
A1(LH)	Z(HL)	A2&!A3	0.0100	0.0010	0.6928	0.0772
A1(HL)	Z(LH)	!A2&A3	0.0100	0.0010	1.1269	0.0524
A1(HL)	Z(LH)	A2&!A3	0.0100	0.0010	0.9613	0.0600
A1(LH)	Z(LH)	!A2&!A3	0.0100	0.0010	1.1641	0.0607
A1(LH)	Z(LH)	A2&A3	0.0100	0.0010	0.8069	0.0525
A1(HL)	Z(HL)	!A2&!A3	0.0100	0.0010	1.0153	0.0766
A1(HL)	Z(HL)	A2&A3	0.0100	0.0010	1.0805	0.0572
A3(LH)	Z(LH)	!A1&!A2	0.0100	0.0010	0.2935	0.0514
A3(LH)	Z(LH)	A1&A2	0.0100	0.0010	0.2935	0.0514
A3(HL)	Z(LH)	!A1&A2	0.0100	0.0010	0.6084	0.0548
A3(HL)	Z(LH)	A1&!A2	0.0100	0.0010	0.6084	0.0548
A3(HL)	Z(HL)	!A1&!A2	0.0100	0.0010	0.4416	0.0765
A3(HL)	Z(HL)	A1&A2	0.0100	0.0010	0.4414	0.0767
A3(LH)	Z(HL)	!A1&A2	0.0100	0.0010	0.5011	0.0574
A3(LH)	Z(HL)	A1&!A2	0.0100	0.0010	0.5011	0.0574

DYNAMIC ENERGY

Input Pin	When Condition	Tin (ns)	Output	Out Load (pf)	Energy (uW/MHz)
A3	!A1&!A2	0.0100	Z(LH)	0.0010	0.5632
A3	A1&A2	0.0100	Z(LH)	0.0010	0.5624
A3	!A1&A2	0.0100	Z(LH)	0.0010	0.8796
A3	A1&!A2	0.0100	Z(LH)	0.0010	0.8796
A2	!A1&!A3	0.0100	Z(HL)	0.0010	1.2010
A2	A1&A3	0.0100	Z(HL)	0.0010	1.1647
A2	!A1&A3	0.0100	Z(HL)	0.0010	1.1566
A2	A1&!A3	0.0100	Z(HL)	0.0010	1.0490
A1	!A2&A3	0.0100	Z(HL)	0.0010	1.1869
A1	A2&!A3	0.0100	Z(HL)	0.0010	1.0422
A1	!A2&!A3	0.0100	Z(HL)	0.0010	1.2113
A1	A2&A3	0.0100	Z(HL)	0.0010	1.1447
A2	!A1&!A3	0.0100	Z(LH)	0.0010	1.0588
A2	A1&A3	0.0100	Z(LH)	0.0010	0.8013
A2	!A1&A3	0.0100	Z(LH)	0.0010	0.9576
A2	A1&!A3	0.0100	Z(LH)	0.0010	1.0823
A1	!A2&A3	0.0100	Z(LH)	0.0010	0.9684
A1	A2&!A3	0.0100	Z(LH)	0.0010	1.0460
A1	!A2&!A3	0.0100	Z(LH)	0.0010	1.1039
A1	A2&A3	0.0100	Z(LH)	0.0010	0.7948
A3	!A1&!A2	0.0100	Z(HL)	0.0010	1.0136
A3	A1&A2	0.0100	Z(HL)	0.0010	1.0137
A3	!A1&A2	0.0100	Z(HL)	0.0010	0.8828
A3	A1&!A2	0.0100	Z(HL)	0.0010	0.8828

LEAKAGE POWER

When Condition	Power (nW)
!A1&!A2&!A3	0.3932
!A1&A2&A3	0.3995
A1&!A2&A3	0.4759
A1&A2&!A3	0.3104
!A1&!A2&A3	0.3929
!A1&A2&!A3	0.3892
A1&!A2&!A3	0.4657
A1&A2&A3	0.3101

gf180mcu_fd_sc_mcu7t5v0__xor3_1

gf180mcu_fd_sc_mcu7t5v0__xor3_1 symbol

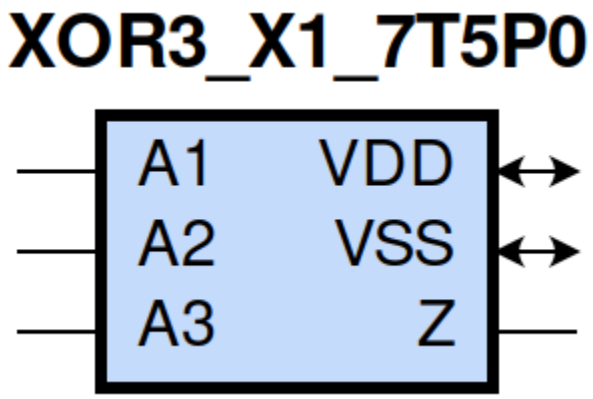

gf180mcu_fd_sc_mcu7t5v0__xor3_1 schematic

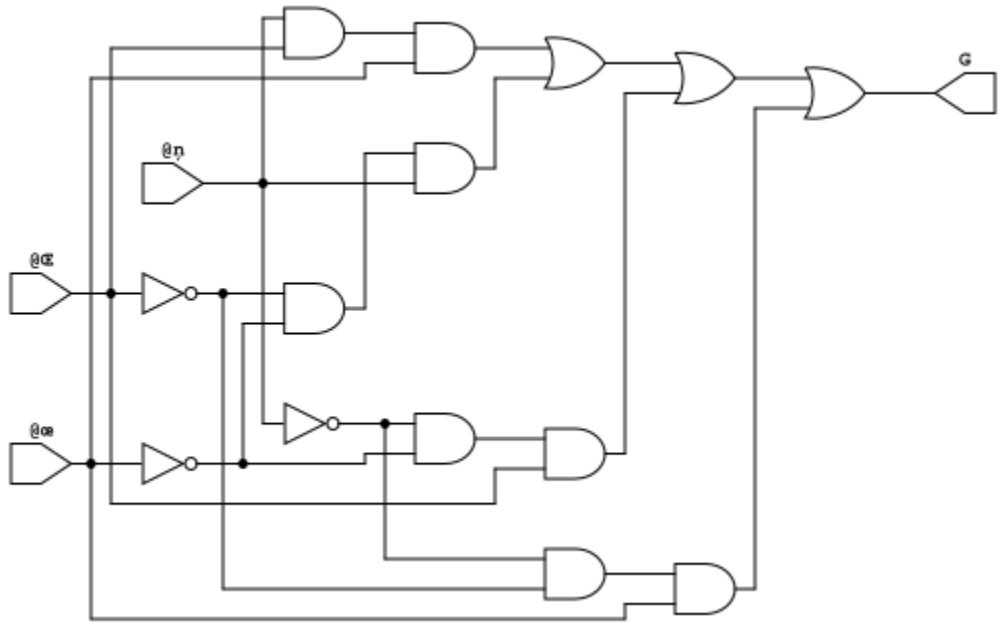

gf180mcu_fd_sc_mcu7t5v0__xor3_1 layout

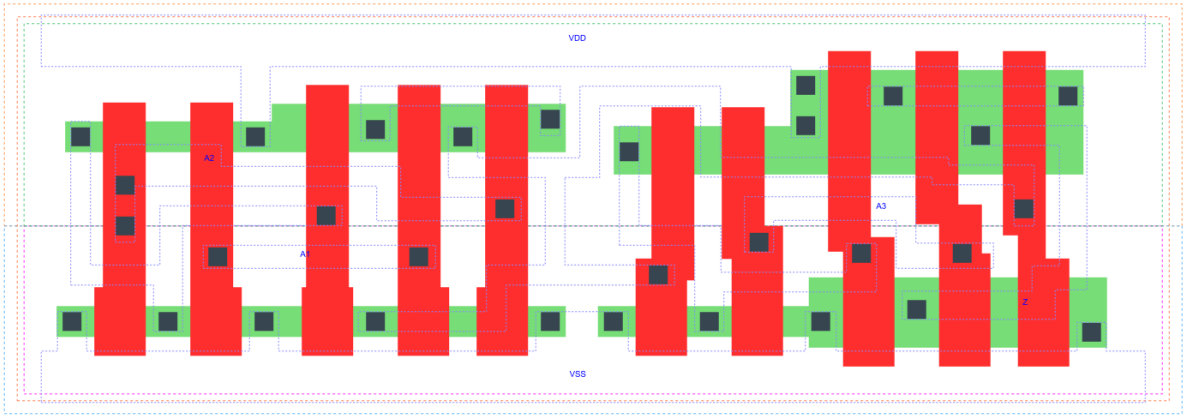

XOR3_X1 is a 3-input exclusive OR, 1X drive strength

Attributes

Attribute	Value
area	50.489600 μm^2

OUTPUT FUNCTIONS

Output Pin	Function
Z	(A1^A2^A3)

TRUTH TABLE FOR Z

A1	A2	A3	Z
1	1	1	1
1	0	0	1
0	1	0	1
0	0	1	1
1	1	0	0
1	0	1	0
0	1	1	0
0	0	0	0

FUNCTIONAL SCHEMATIC

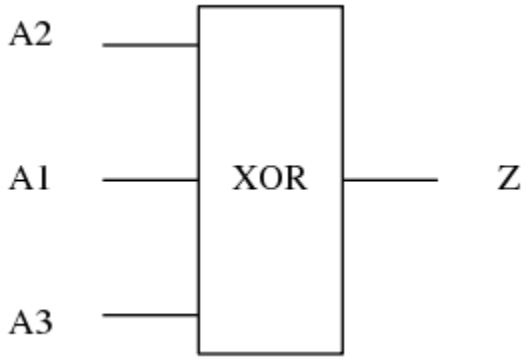

PIN CAPACITANCE (pf)

Pin	Type	Capacitance (pf)
A2	input	0.0053
A1	input	0.0049
A3	input	0.0075

DELAY AND OUTPUT TRANSITION TIME corresponding to min slew and load

Input Pin	Output	When Condition	Tin (ns)	Out Load (pf)	Delay (ns)	Tout (ns)
A2(HL)	Z(HL)	!A1&!A3	0.0100	0.0010	0.9745	0.0905
A2(HL)	Z(HL)	A1&A3	0.0100	0.0010	0.4799	0.1010
A2(LH)	Z(LH)	!A1&!A3	0.0100	0.0010	0.7968	0.0944
A2(LH)	Z(LH)	A1&A3	0.0100	0.0010	0.4223	0.1263
A2(HL)	Z(LH)	!A1&A3	0.0100	0.0010	0.7333	0.1211
A2(HL)	Z(LH)	A1&!A3	0.0100	0.0010	0.6894	0.0948
A2(LH)	Z(HL)	!A1&A3	0.0100	0.0010	0.5910	0.0956
A2(LH)	Z(HL)	A1&!A3	0.0100	0.0010	0.6702	0.0917
A1(LH)	Z(HL)	!A2&A3	0.0100	0.0010	0.6252	0.1011
A1(LH)	Z(HL)	A2&!A3	0.0100	0.0010	0.6591	0.0917
A1(HL)	Z(LH)	!A2&A3	0.0100	0.0010	0.7628	0.1211
A1(HL)	Z(LH)	A2&!A3	0.0100	0.0010	0.6611	0.0943
A1(LH)	Z(LH)	!A2&!A3	0.0100	0.0010	0.8353	0.0948
A1(LH)	Z(LH)	A2&A3	0.0100	0.0010	0.4112	0.1264
A1(HL)	Z(HL)	!A2&!A3	0.0100	0.0010	1.0041	0.0905
A1(HL)	Z(HL)	A2&A3	0.0100	0.0010	0.4549	0.0955
A3(LH)	Z(LH)	!A1&!A2	0.0100	0.0010	0.3012	0.1193
A3(LH)	Z(LH)	A1&A2	0.0100	0.0010	0.3012	0.1197
A3(HL)	Z(LH)	!A1&A2	0.0100	0.0010	0.1066	0.0857
A3(HL)	Z(LH)	A1&!A2	0.0100	0.0010	0.1066	0.0857
A3(HL)	Z(HL)	!A1&!A2	0.0100	0.0010	0.3957	0.0895
A3(HL)	Z(HL)	A1&A2	0.0100	0.0010	0.3959	0.0901
A3(LH)	Z(HL)	!A1&A2	0.0100	0.0010	0.0658	0.0392
A3(LH)	Z(HL)	A1&!A2	0.0100	0.0010	0.0658	0.0392

DYNAMIC ENERGY

Input Pin	When Condition	Tin (ns)	Output	Out Load (pf)	Energy (uW/MHz)
A3	!A1&!A2	0.0100	Z(LH)	0.0010	0.2100
A3	A1&A2	0.0100	Z(LH)	0.0010	0.2101
A3	!A1&A2	0.0100	Z(LH)	0.0010	0.1414
A3	A1&!A2	0.0100	Z(LH)	0.0010	0.1414
A2	!A1&!A3	0.0100	Z(HL)	0.0010	0.4736
A2	A1&A3	0.0100	Z(HL)	0.0010	0.3519
A2	!A1&A3	0.0100	Z(HL)	0.0010	0.3439
A2	A1&!A3	0.0100	Z(HL)	0.0010	0.2975
A1	!A2&A3	0.0100	Z(HL)	0.0010	0.3749
A1	A2&!A3	0.0100	Z(HL)	0.0010	0.2908
A1	!A2&!A3	0.0100	Z(HL)	0.0010	0.4840
A1	A2&A3	0.0100	Z(HL)	0.0010	0.3312
A2	!A1&!A3	0.0100	Z(LH)	0.0010	0.4533
A2	A1&A3	0.0100	Z(LH)	0.0010	0.1961
A2	!A1&A3	0.0100	Z(LH)	0.0010	0.3744
A2	A1&!A3	0.0100	Z(LH)	0.0010	0.4584
A1	!A2&A3	0.0100	Z(LH)	0.0010	0.3849
A1	A2&!A3	0.0100	Z(LH)	0.0010	0.4404
A1	!A2&!A3	0.0100	Z(LH)	0.0010	0.4814
A1	A2&A3	0.0100	Z(LH)	0.0010	0.1894
A3	!A1&!A2	0.0100	Z(HL)	0.0010	0.3048
A3	A1&A2	0.0100	Z(HL)	0.0010	0.3048
A3	!A1&A2	0.0100	Z(HL)	0.0010	-0.0066
A3	A1&!A2	0.0100	Z(HL)	0.0010	-0.0066

LEAKAGE POWER

When Condition	Power (nW)
!A1&!A2&!A3	0.3710
!A1&A2&A3	0.2102
A1&!A2&A3	0.2867
A1&A2&!A3	0.2886
!A1&!A2&A3	0.3635
!A1&A2&!A3	0.2081
A1&!A2&!A3	0.2846
A1&A2&A3	0.2811

gf180mcu_fd_sc_mcu7t5v0__xor3_2

gf180mcu_fd_sc_mcu7t5v0__xor3_2 symbol

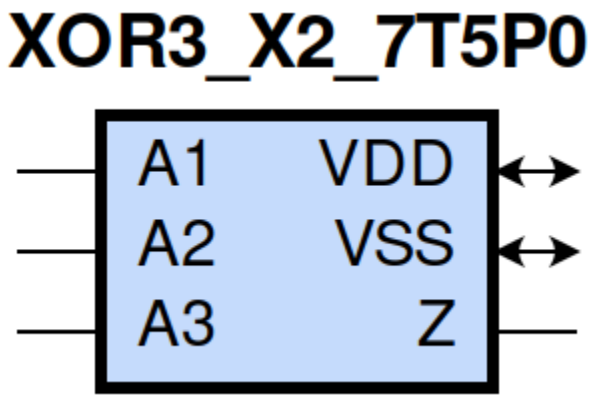

gf180mcu_fd_sc_mcu7t5v0__xor3_2 schematic

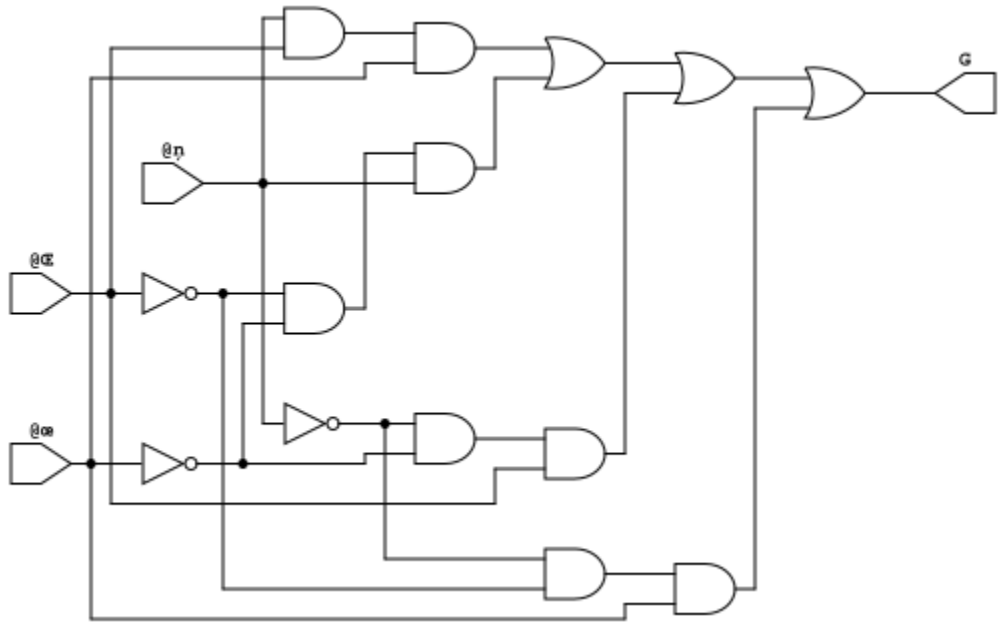

gf180mcu_fd_sc_mcu7t5v0__xor3_2 layout

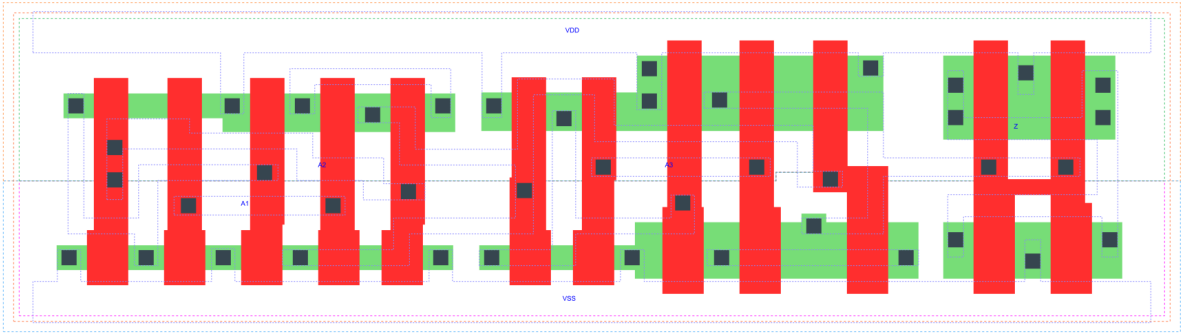

XOR3_X2 is a 3-input exclusive OR, 2X drive strength

Attributes

Attribute	Value
area	63.660800 μm^2

OUTPUT FUNCTIONS

Output Pin	Function
Z	(A1^A2^A3)

TRUTH TABLE FOR Z

A1	A2	A3	Z
1	1	1	1
1	0	0	1
0	1	0	1
0	0	1	1
1	1	0	0
1	0	1	0
0	1	1	0
0	0	0	0

FUNCTIONAL SCHEMATIC

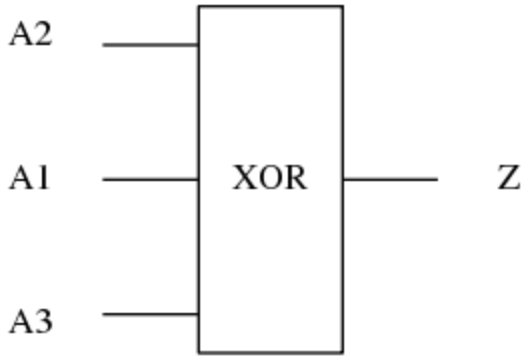

PIN CAPACITANCE (pf)

Pin	Type	Capacitance (pf)
A2	input	0.0052
A1	input	0.0048
A3	input	0.0069

DELAY AND OUTPUT TRANSITION TIME corresponding to min slew and load

Input Pin	Output	When Condition	Tin (ns)	Out Load (pf)	Delay (ns)	Tout (ns)
A2(HL)	Z(HL)	!A1&!A3	0.0100	0.0010	0.8916	0.0576
A2(HL)	Z(HL)	A1&A3	0.0100	0.0010	0.9310	0.0472
A2(LH)	Z(LH)	!A1&!A3	0.0100	0.0010	0.8376	0.0513
A2(LH)	Z(LH)	A1&A3	0.0100	0.0010	0.6710	0.0457
A2(HL)	Z(LH)	!A1&A3	0.0100	0.0010	0.9842	0.0457
A2(HL)	Z(LH)	A1&!A3	0.0100	0.0010	0.7345	0.0517
A2(LH)	Z(HL)	!A1&A3	0.0100	0.0010	1.0339	0.0472
A2(LH)	Z(HL)	A1&!A3	0.0100	0.0010	0.5782	0.0584
A1(LH)	Z(HL)	!A2&A3	0.0100	0.0010	1.0768	0.0475
A1(LH)	Z(HL)	A2&!A3	0.0100	0.0010	0.5670	0.0584
A1(HL)	Z(LH)	!A2&A3	0.0100	0.0010	1.0147	0.0457
A1(HL)	Z(LH)	A2&!A3	0.0100	0.0010	0.7010	0.0511
A1(LH)	Z(LH)	!A2&!A3	0.0100	0.0010	0.8804	0.0520
A1(LH)	Z(LH)	A2&A3	0.0100	0.0010	0.6598	0.0457
A1(HL)	Z(HL)	!A2&!A3	0.0100	0.0010	0.9220	0.0577
A1(HL)	Z(HL)	A2&A3	0.0100	0.0010	0.8972	0.0471
A3(LH)	Z(LH)	!A1&!A2	0.0100	0.0010	0.2106	0.0446
A3(LH)	Z(LH)	A1&A2	0.0100	0.0010	0.2106	0.0446
A3(HL)	Z(LH)	!A1&A2	0.0100	0.0010	0.4393	0.0471
A3(HL)	Z(LH)	A1&!A2	0.0100	0.0010	0.4392	0.0472
A3(HL)	Z(HL)	!A1&!A2	0.0100	0.0010	0.3086	0.0573
A3(HL)	Z(HL)	A1&A2	0.0100	0.0010	0.3084	0.0572
A3(LH)	Z(HL)	!A1&A2	0.0100	0.0010	0.4390	0.0473
A3(LH)	Z(HL)	A1&!A2	0.0100	0.0010	0.4389	0.0474

DYNAMIC ENERGY

Input Pin	When Condition	Tin (ns)	Output	Out Load (pf)	Energy (uW/MHz)
A3	!A1&!A2	0.0100	Z(LH)	0.0010	0.2308
A3	A1&A2	0.0100	Z(LH)	0.0010	0.2308
A3	!A1&A2	0.0100	Z(LH)	0.0010	0.5173
A3	A1&!A2	0.0100	Z(LH)	0.0010	0.5170
A2	!A1&!A3	0.0100	Z(HL)	0.0010	0.6800
A2	A1&A3	0.0100	Z(HL)	0.0010	0.7795
A2	!A1&A3	0.0100	Z(HL)	0.0010	0.7736
A2	A1&!A3	0.0100	Z(HL)	0.0010	0.5064
A1	!A2&A3	0.0100	Z(HL)	0.0010	0.8031
A1	A2&!A3	0.0100	Z(HL)	0.0010	0.4997
A1	!A2&!A3	0.0100	Z(HL)	0.0010	0.6908
A1	A2&A3	0.0100	Z(HL)	0.0010	0.7604
A2	!A1&!A3	0.0100	Z(LH)	0.0010	0.6270
A2	A1&A3	0.0100	Z(LH)	0.0010	0.4724
A2	!A1&A3	0.0100	Z(LH)	0.0010	0.6490
A2	A1&!A3	0.0100	Z(LH)	0.0010	0.6390
A1	!A2&A3	0.0100	Z(LH)	0.0010	0.6596
A1	A2&!A3	0.0100	Z(LH)	0.0010	0.6141
A1	!A2&!A3	0.0100	Z(LH)	0.0010	0.6624
A1	A2&A3	0.0100	Z(LH)	0.0010	0.4656
A3	!A1&!A2	0.0100	Z(HL)	0.0010	0.4674
A3	A1&A2	0.0100	Z(HL)	0.0010	0.4674
A3	!A1&A2	0.0100	Z(HL)	0.0010	0.4926
A3	A1&!A2	0.0100	Z(HL)	0.0010	0.4927

LEAKAGE POWER

When Condition	Power (nW)
!A1&!A2&!A3	0.3401
!A1&A2&A3	0.3468
A1&!A2&A3	0.4232
A1&A2&!A3	0.2576
!A1&!A2&A3	0.3419
!A1&A2&!A3	0.3383
A1&!A2&!A3	0.4148
A1&A2&A3	0.2595

1.1.2 9 track Standard Cells

5V Databook Setup and Conditions

Process Corner:	Typical
Voltage:	5.00 volt
Temperature:	25.0 °C

Reading Databook Symbols

Symbol	Definition
0	Logic Low
1	Logic High
HL	High to Low Transition
LH	Low to High Transition
↑	Positive Clock Edge
↓	Negative Clock edge
Tin	Input Transition 30 to70 %
Delay	50 to 50%
Tout	Output Transition 30 to 70%
?	Don't Care (Combinatorial Cells)
X	Don't Care (Sequential Cells)
default	No "when" condition for Input
n/a	No Transition

Physical Specifications

Process Scheme (#Poly/#Metal)	1P1M
Device Type	5V NMOS & 5V PMOS
Drawn Gate Length PMOS/NMOS(um)	0.50/0.60
Layer of Poly	1
Well Option	Outside DNWELL
Layer Grid (um)	0.005
Tracks per Cell	9
Cell Height (um)	5.04
Vertical/Horizontal Pin Grid (um)	0.56

Electrical Specifications

Operating Voltage	VDD = 1.62 - 5.5V
Operation Temperature	-40°C to 125°C

Maximum Transition

Lesser of 20% clock period or recommended value below

Process	Temperature	VDD Voltage	Max Transition
SS	-40°C	4.5V	1.30ns
SS	125°C	4.5V	1.80ns
TT	25°C	5.0V	1.00ns
FF	-40°C	5.5V	0.70ns
FF	125°C	5.5V	0.90ns
SS	-40°C	3.0V	2.00ns
SS	125°C	3.0V	2.80ns
TT	25°C	3.3V	1.50ns
FF	-40°C	3.6V	0.95ns
FF	125°C	3.6V	1.30ns
SS	-40°C	1.62V	4.25ns
SS	125°C	1.62V	5.00ns
TT	25°C	1.8V	3.00ns
FF	-40°C	1.98V	1.50ns
FF	125°C	1.98V	2.10ns

PVT Characterization Corners

Process	Temperature	VDD Voltage	PEX
SS	-40°C	4.5V	Worst RC
SS	125°C	4.5V	Worst RC
TT	25°C	5.0V	Typical RC
FF	-40°C	5.5V	Best RC
FF	125°C	5.5V	Best RC
SS	-40°C	3.0V	Worst RC
SS	125°C	3.0V	Worst RC
TT	25°C	3.3V	Typical RC
FF	-40°C	3.6V	Best RC
FF	125°C	3.6V	Best RC
SS	-40°C	1.62V	Worst RC
SS	125°C	1.62V	Worst RC
TT	25°C	1.8V	Typical RC
FF	-40°C	1.98V	Best RC
FF	125°C	1.98V	Best RC

gf180mcu_fd_sc_mcu9t5v0__addf_1

gf180mcu_fd_sc_mcu9t5v0__addf_1 symbol

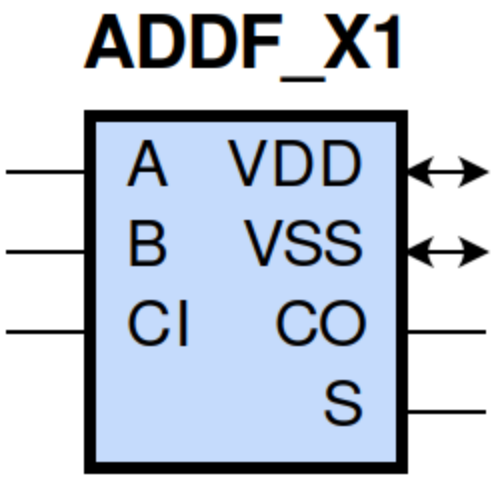

gf180mcu_fd_sc_mcu9t5v0__addf_1 schematic

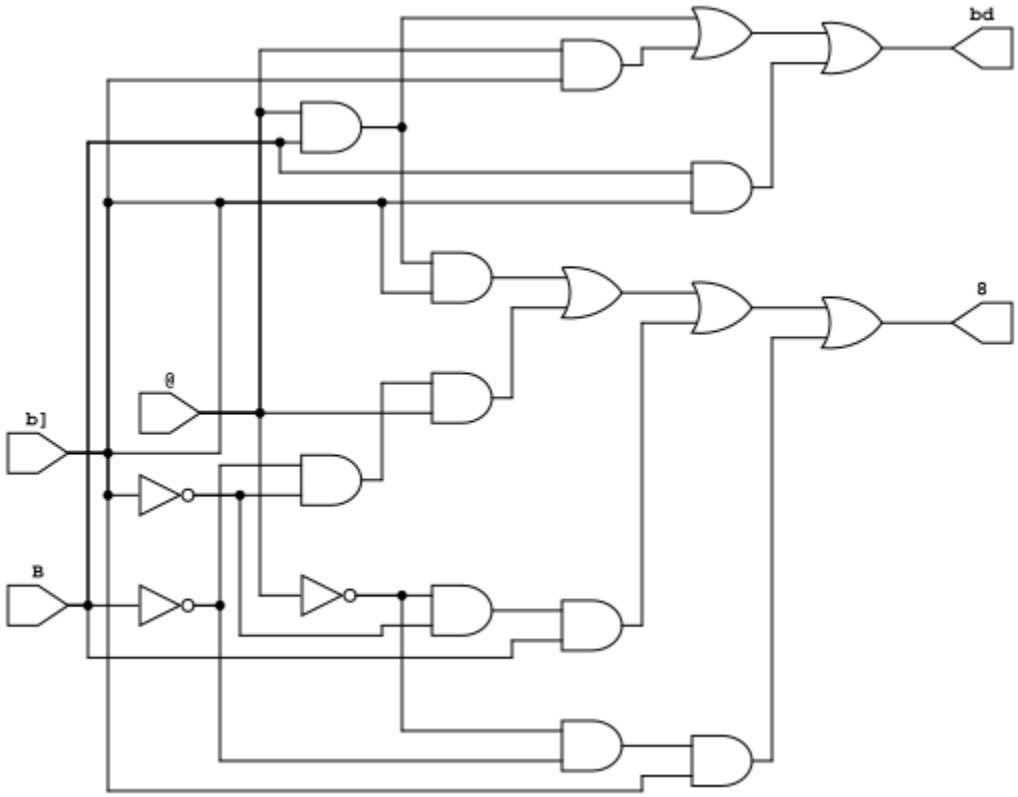

gf180mcu_fd_sc_mcu9t5v0__addf_1 layout

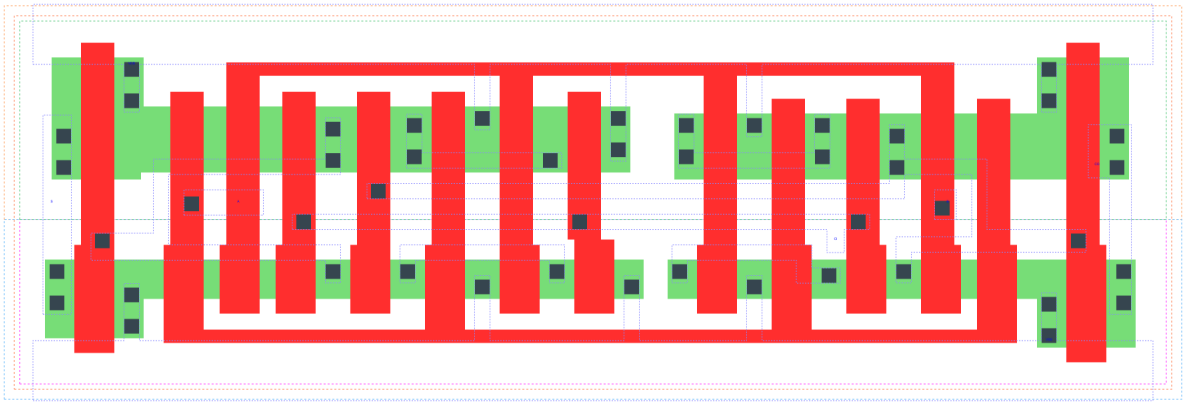

ADDF_X1 is a 1 bit Full Adder with 1X drive strength

Attributes

Attribute	Value
area	84.672000 μm^2

OUTPUT FUNCTIONS

Output Pin	Function
S	(A^B^CI)
CO	((A&B)|(A&CI)|(B&CI))

TRUTH TABLE FOR S

A	B	CI	S
1	1	1	1
1	0	0	1
0	1	0	1
0	0	1	1
1	1	0	0
1	0	1	0
0	1	1	0
0	0	0	0

TRUTH TABLE FOR CO

A	B	CI	CO
1	1	?	1
1	?	1	1
?	1	1	1
0	0	?	0
0	?	0	0
?	0	0	0

FUNCTIONAL SCHEMATIC

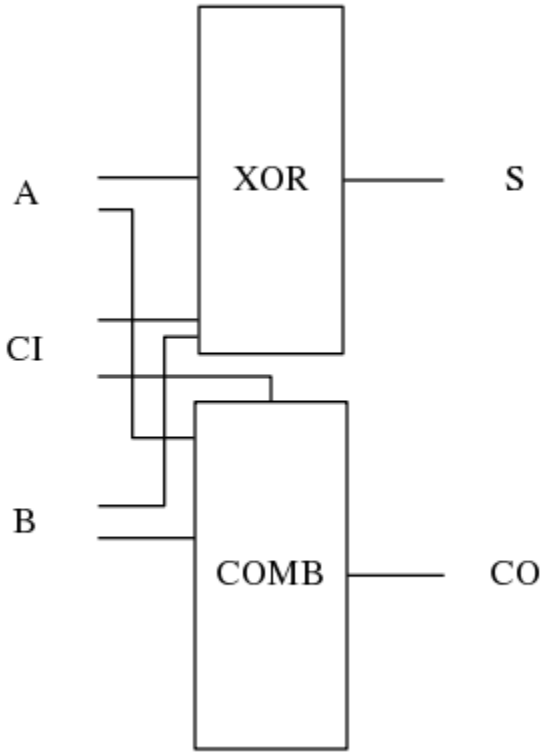

PIN CAPACITANCE (pf)

Pin	Type	Capacitance (pf)
A	input	0.0150
CI	input	0.0116
B	input	0.0143

DELAY AND OUTPUT TRANSITION TIME corresponding to min slew and load

Input Pin	Output	When Condition	Tin (ns)	Out Load (pf)	Delay (ns)	Tout (ns)
A(HL)	S(LH)	!B&CI	0.0100	0.0010	0.7185	0.0499
A(HL)	S(LH)	B&!CI	0.0100	0.0010	0.7232	0.0476
A(HL)	S(HL)	!B&!CI	0.0100	0.0010	0.5117	0.0764
A(HL)	S(HL)	B&CI	0.0100	0.0010	0.3704	0.0581
A(LH)	CO(LH)	!B&CI	0.0100	0.0010	0.3456	0.0509
A(LH)	CO(LH)	B&!CI	0.0100	0.0010	0.3568	0.0522
A(LH)	S(LH)	!B&!CI	0.0100	0.0010	0.2907	0.0467
A(LH)	S(LH)	B&CI	0.0100	0.0010	0.3702	0.0555
A(HL)	CO(HL)	!B&CI	0.0100	0.0010	0.4308	0.0691
A(HL)	CO(HL)	B&!CI	0.0100	0.0010	0.4197	0.0657
A(LH)	S(HL)	!B&CI	0.0100	0.0010	0.5993	0.0554
A(LH)	S(HL)	B&!CI	0.0100	0.0010	0.5897	0.0573
CI(HL)	S(LH)	!A&B	0.0100	0.0010	0.6705	0.0477
CI(HL)	S(LH)	A&!B	0.0100	0.0010	0.6863	0.0499
CI(HL)	CO(HL)	!A&B	0.0100	0.0010	0.3716	0.0657
CI(HL)	CO(HL)	A&!B	0.0100	0.0010	0.3508	0.0675
CI(LH)	S(HL)	!A&B	0.0100	0.0010	0.5848	0.0590
CI(LH)	S(HL)	A&!B	0.0100	0.0010	0.5711	0.0552
CI(LH)	S(LH)	!A&!B	0.0100	0.0010	0.2586	0.0456
CI(LH)	S(LH)	A&B	0.0100	0.0010	0.3650	0.0554
CI(HL)	S(HL)	!A&!B	0.0100	0.0010	0.4794	0.0764
CI(HL)	S(HL)	A&B	0.0100	0.0010	0.3230	0.0561
CI(LH)	CO(LH)	!A&B	0.0100	0.0010	0.3005	0.0515
CI(LH)	CO(LH)	A&!B	0.0100	0.0010	0.3182	0.0511
B(LH)	S(LH)	!A&!CI	0.0100	0.0010	0.2719	0.0444
B(LH)	S(LH)	A&CI	0.0100	0.0010	0.3661	0.0556
B(LH)	CO(LH)	!A&CI	0.0100	0.0010	0.3231	0.0516
B(LH)	CO(LH)	A&!CI	0.0100	0.0010	0.3594	0.0523
B(HL)	S(HL)	!A&!CI	0.0100	0.0010	0.5050	0.0765
B(HL)	S(HL)	A&CI	0.0100	0.0010	0.3486	0.0545
B(HL)	S(LH)	!A&CI	0.0100	0.0010	0.7203	0.0499
B(HL)	S(LH)	A&!CI	0.0100	0.0010	0.7247	0.0501
B(HL)	CO(HL)	!A&CI	0.0100	0.0010	0.4323	0.0692
B(HL)	CO(HL)	A&!CI	0.0100	0.0010	0.3904	0.0661
B(LH)	S(HL)	!A&CI	0.0100	0.0010	0.6068	0.0590
B(LH)	S(HL)	A&!CI	0.0100	0.0010	0.5927	0.0575

DYNAMIC ENERGY

Input Pin	When Condition	Tin (ns)	Output	Out Load (pf)	Energy (uW/MHz)
B	!A&!CI	0.0100	S(LH)	0.0010	0.1292
B	A&CI	0.0100	S(LH)	0.0010	0.1923

continues on next page

Table 155 – continued from previous page

B	!A&CI	0.0100	S(LH)	0.0010	0.4511
B	A&!CI	0.0100	S(LH)	0.0010	0.4449
A	!B&CI	0.0100	S(LH)	0.0010	0.4533
A	B&!CI	0.0100	S(LH)	0.0010	0.4429
A	!B&!CI	0.0100	S(LH)	0.0010	0.1459
A	B&CI	0.0100	S(LH)	0.0010	0.1677
B	!A&CI	0.0100	CO(LH)	0.0010	0.2577
B	A&!CI	0.0100	CO(LH)	0.0010	0.2831
CI	!A&B	0.0100	S(LH)	0.0010	0.4072
CI	A&!B	0.0100	S(LH)	0.0010	0.4197
CI	!A&!B	0.0100	S(LH)	0.0010	0.1786
CI	A&B	0.0100	S(LH)	0.0010	0.2344
CI	!A&B	0.0100	CO(HL)	0.0010	0.4439
CI	A&!B	0.0100	CO(HL)	0.0010	0.4524
B	!A&!CI	0.0100	S(HL)	0.0010	0.5798
B	A&CI	0.0100	S(HL)	0.0010	0.4709
B	!A&CI	0.0100	S(HL)	0.0010	0.2748
B	A&!CI	0.0100	S(HL)	0.0010	0.2924
CI	!A&B	0.0100	S(HL)	0.0010	0.3006
CI	A&!B	0.0100	S(HL)	0.0010	0.2866
CI	!A&!B	0.0100	S(HL)	0.0010	0.5337
CI	A&B	0.0100	S(HL)	0.0010	0.4467
A	!B&!CI	0.0100	S(HL)	0.0010	0.5955
A	B&CI	0.0100	S(HL)	0.0010	0.5345
A	!B&CI	0.0100	S(HL)	0.0010	0.2602
A	B&!CI	0.0100	S(HL)	0.0010	0.2731
A	!B&CI	0.0100	CO(LH)	0.0010	0.2487
A	B&!CI	0.0100	CO(LH)	0.0010	0.2644
B	!A&CI	0.0100	CO(HL)	0.0010	0.4915
B	A&!CI	0.0100	CO(HL)	0.0010	0.4767
CI	!A&B	0.0100	CO(LH)	0.0010	0.2836
CI	A&!B	0.0100	CO(LH)	0.0010	0.2755
A	!B&CI	0.0100	CO(HL)	0.0010	0.4940
A	B&!CI	0.0100	CO(HL)	0.0010	0.4803

LEAKAGE POWER

When Condition	Power (nW)
!A&!B&!CI	0.2854
!A&!B&CI	0.2662
!A&B&!CI	0.2819
A&!B&!CI	0.2772
!A&B&CI	0.2855
A&!B&CI	0.2819
A&B&!CI	0.2607
A&B&CI	0.2799

gf180mcu_fd_sc_mcu9t5v0__addf_2

gf180mcu_fd_sc_mcu9t5v0__addf_2 symbol

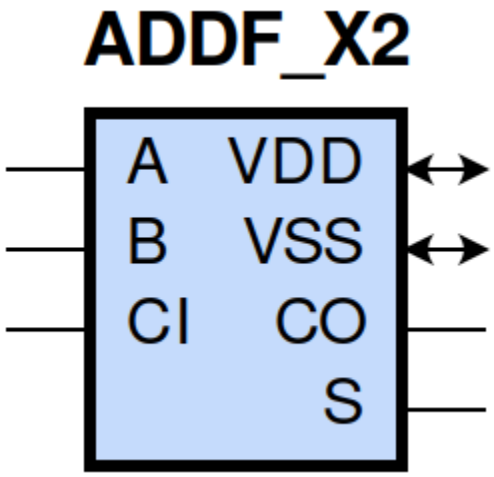

gf180mcu_fd_sc_mcu9t5v0__addf_2 schematic

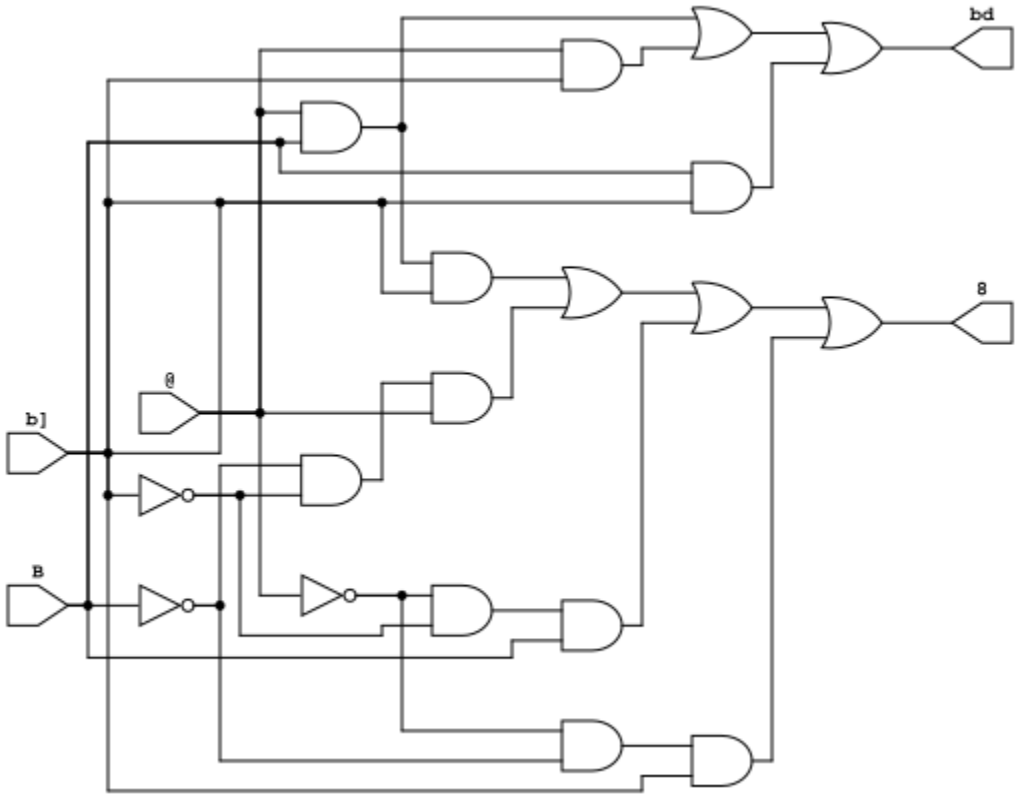

gf180mcu_fd_sc_mcu9t5v0__addf_2 layout

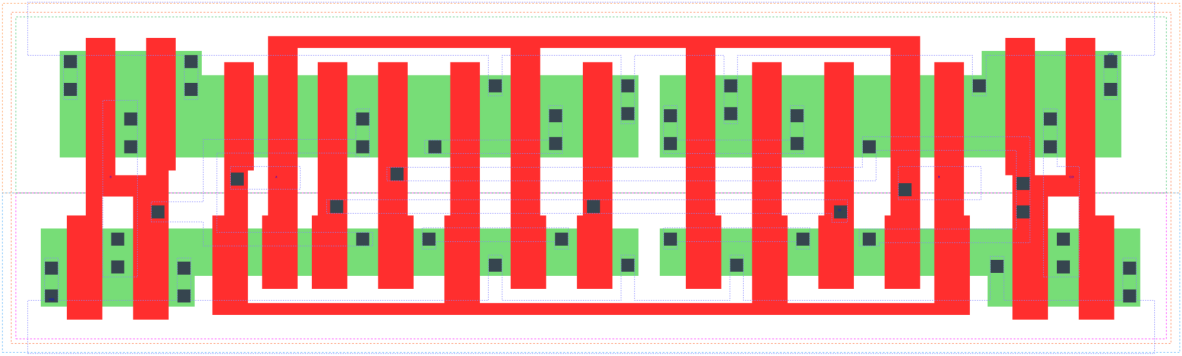

ADDF_X2 is a 1 bit Full Adder with 2X drive strength

Attributes

Attribute	Value
area	95.961600 μm^2

OUTPUT FUNCTIONS

Output Pin	Function
S	(A^B^CI)
CO	((A&B)|(A&CI)|(B&CI))

TRUTH TABLE FOR S

A	B	CI	S
1	1	1	1
1	0	0	1
0	1	0	1
0	0	1	1
1	1	0	0
1	0	1	0
0	1	1	0
0	0	0	0

TRUTH TABLE FOR CO

A	B	CI	CO
1	1	?	1
1	?	1	1
?	1	1	1
0	0	?	0
0	?	0	0
?	0	0	0

FUNCTIONAL SCHEMATIC

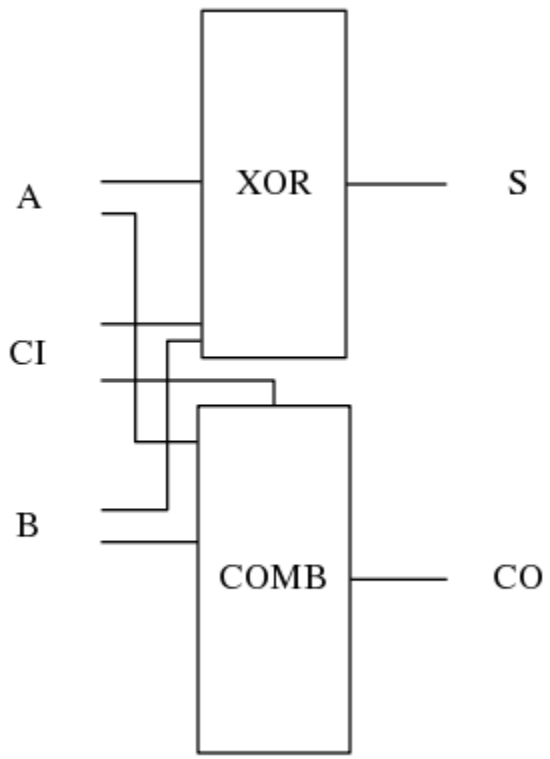

PIN CAPACITANCE (pf)

Pin	Type	Capacitance (pf)
A	input	0.0190
CI	input	0.0142
B	input	0.0184

DELAY AND OUTPUT TRANSITION TIME corresponding to min slew and load

Input Pin	Output	When Condition	Tin (ns)	Out Load (pf)	Delay (ns)	Tout (ns)
A(HL)	S(LH)	!B&CI	0.0100	0.0010	0.7765	0.0456
A(HL)	S(LH)	B&!CI	0.0100	0.0010	0.7895	0.0444
A(HL)	S(HL)	!B&!CI	0.0100	0.0010	0.5091	0.0708
A(HL)	S(HL)	B&CI	0.0100	0.0010	0.3718	0.0533
A(LH)	CO(LH)	!B&CI	0.0100	0.0010	0.3565	0.0450
A(LH)	CO(LH)	B&!CI	0.0100	0.0010	0.3714	0.0463
A(LH)	S(LH)	!B&!CI	0.0100	0.0010	0.3204	0.0421
A(LH)	S(LH)	B&CI	0.0100	0.0010	0.4152	0.0515
A(HL)	CO(HL)	!B&CI	0.0100	0.0010	0.4178	0.0618
A(HL)	CO(HL)	B&!CI	0.0100	0.0010	0.4116	0.0591
A(LH)	S(HL)	!B&CI	0.0100	0.0010	0.6342	0.0519
A(LH)	S(HL)	B&!CI	0.0100	0.0010	0.6277	0.0534
CI(HL)	S(LH)	!A&B	0.0100	0.0010	0.7397	0.0441
CI(HL)	S(LH)	A&!B	0.0100	0.0010	0.7595	0.0458
CI(HL)	CO(HL)	!A&B	0.0100	0.0010	0.3668	0.0590
CI(HL)	CO(HL)	A&!B	0.0100	0.0010	0.3462	0.0608
CI(LH)	S(HL)	!A&B	0.0100	0.0010	0.6183	0.0553
CI(LH)	S(HL)	A&!B	0.0100	0.0010	0.6082	0.0518
CI(LH)	S(LH)	!A&!B	0.0100	0.0010	0.2829	0.0410
CI(LH)	S(LH)	A&B	0.0100	0.0010	0.4116	0.0512
CI(HL)	S(HL)	!A&!B	0.0100	0.0010	0.4782	0.0709
CI(HL)	S(HL)	A&B	0.0100	0.0010	0.3274	0.0513
CI(LH)	CO(LH)	!A&B	0.0100	0.0010	0.3124	0.0454
CI(LH)	CO(LH)	A&!B	0.0100	0.0010	0.3316	0.0449
B(LH)	S(LH)	!A&!CI	0.0100	0.0010	0.3000	0.0398
B(LH)	S(LH)	A&CI	0.0100	0.0010	0.4120	0.0516
B(LH)	CO(LH)	!A&CI	0.0100	0.0010	0.3332	0.0454
B(LH)	CO(LH)	A&!CI	0.0100	0.0010	0.3743	0.0461
B(HL)	S(HL)	!A&!CI	0.0100	0.0010	0.5045	0.0711
B(HL)	S(HL)	A&CI	0.0100	0.0010	0.3524	0.0503
B(HL)	S(LH)	!A&CI	0.0100	0.0010	0.7780	0.0459
B(HL)	S(LH)	A&!CI	0.0100	0.0010	0.7970	0.0459
B(HL)	CO(HL)	!A&CI	0.0100	0.0010	0.4189	0.0620
B(HL)	CO(HL)	A&!CI	0.0100	0.0010	0.3850	0.0598
B(LH)	S(HL)	!A&CI	0.0100	0.0010	0.6385	0.0552
B(LH)	S(HL)	A&!CI	0.0100	0.0010	0.6310	0.0536

DYNAMIC ENERGY

Input Pin	When Condition	Tin (ns)	Output	Out Load (pf)	Energy (uW/MHz)
B	!A&!CI	0.0100	S(LH)	0.0010	0.2959
B	A&CI	0.0100	S(LH)	0.0010	0.4370

continues on next page

Table 157 – continued from previous page

B	!A&CI	0.0100	S(LH)	0.0010	0.7727
B	A&!CI	0.0100	S(LH)	0.0010	0.7671
A	!B&CI	0.0100	S(LH)	0.0010	0.7760
A	B&!CI	0.0100	S(LH)	0.0010	0.7600
A	!B&!CI	0.0100	S(LH)	0.0010	0.3248
A	B&CI	0.0100	S(LH)	0.0010	0.4020
B	!A&CI	0.0100	CO(LH)	0.0010	0.5056
B	A&!CI	0.0100	CO(LH)	0.0010	0.5445
CI	!A&B	0.0100	S(LH)	0.0010	0.7130
CI	A&!B	0.0100	S(LH)	0.0010	0.7362
CI	!A&!B	0.0100	S(LH)	0.0010	0.3582
CI	A&B	0.0100	S(LH)	0.0010	0.4972
CI	!A&B	0.0100	CO(HL)	0.0010	0.7503
CI	A&!B	0.0100	CO(HL)	0.0010	0.7660
B	!A&!CI	0.0100	S(HL)	0.0010	1.0360
B	A&CI	0.0100	S(HL)	0.0010	0.8137
B	!A&CI	0.0100	S(HL)	0.0010	0.5390
B	A&!CI	0.0100	S(HL)	0.0010	0.5679
CI	!A&B	0.0100	S(HL)	0.0010	0.5766
CI	A&!B	0.0100	S(HL)	0.0010	0.5537
CI	!A&!B	0.0100	S(HL)	0.0010	0.9696
CI	A&B	0.0100	S(HL)	0.0010	0.7879
A	!B&!CI	0.0100	S(HL)	0.0010	1.0576
A	B&CI	0.0100	S(HL)	0.0010	0.9131
A	!B&CI	0.0100	S(HL)	0.0010	0.5159
A	B&!CI	0.0100	S(HL)	0.0010	0.5406
A	!B&CI	0.0100	CO(LH)	0.0010	0.4879
A	B&!CI	0.0100	CO(LH)	0.0010	0.5181
B	!A&CI	0.0100	CO(HL)	0.0010	0.8116
B	A&!CI	0.0100	CO(HL)	0.0010	0.7962
CI	!A&B	0.0100	CO(LH)	0.0010	0.5425
CI	A&!B	0.0100	CO(LH)	0.0010	0.5264
A	!B&CI	0.0100	CO(HL)	0.0010	0.8150
A	B&!CI	0.0100	CO(HL)	0.0010	0.7977

LEAKAGE POWER

When Condition	Power (nW)
!A&!B&!CI	0.3386
!A&!B&CI	0.3182
!A&B&!CI	0.3344
A&!B&!CI	0.3298
!A&B&CI	0.3380
A&!B&CI	0.3344
A&B&!CI	0.3135
A&B&CI	0.3322

gf180mcu_fd_sc_mcu9t5v0__addf_4

gf180mcu_fd_sc_mcu9t5v0__addf_4 symbol

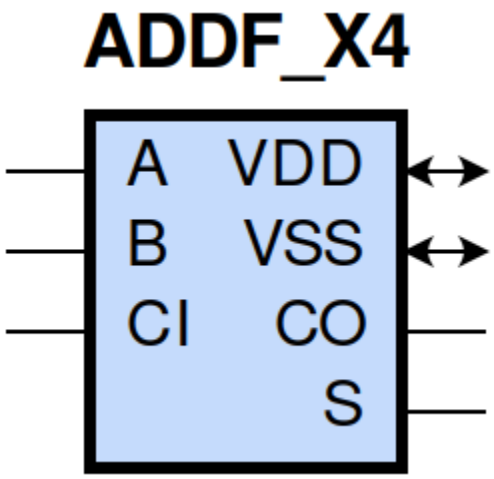

gf180mcu_fd_sc_mcu9t5v0__addf_4 schematic

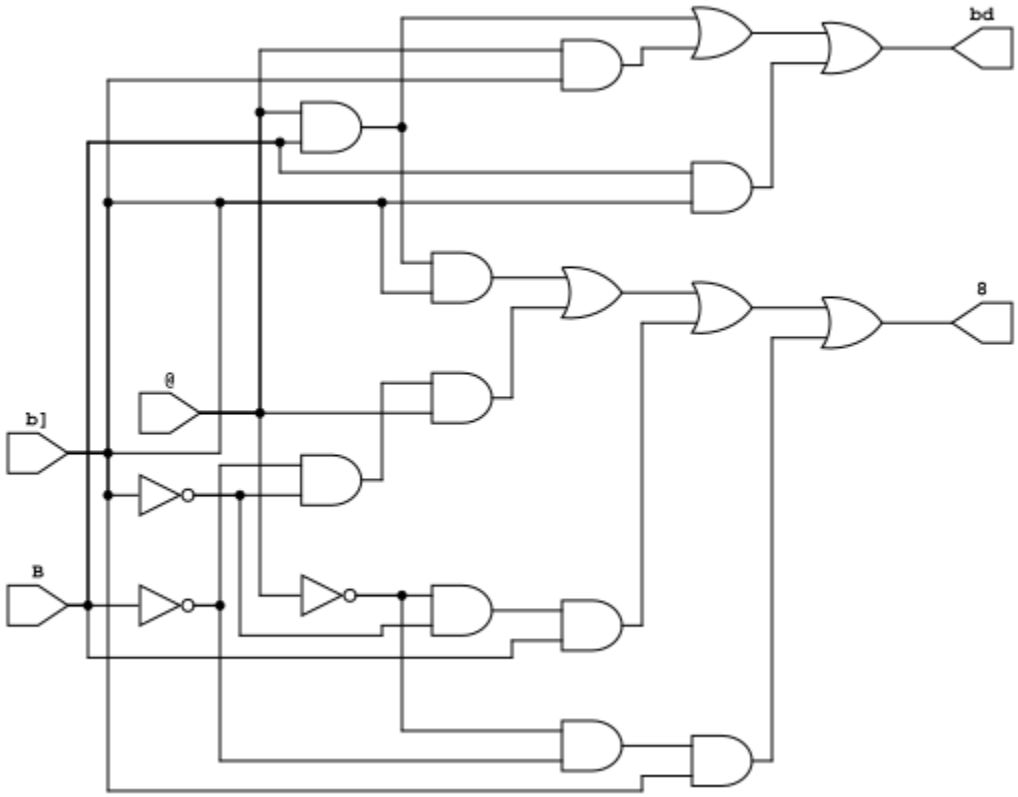

gf180mcu_fd_sc_mcu9t5v0__addf_4 layout

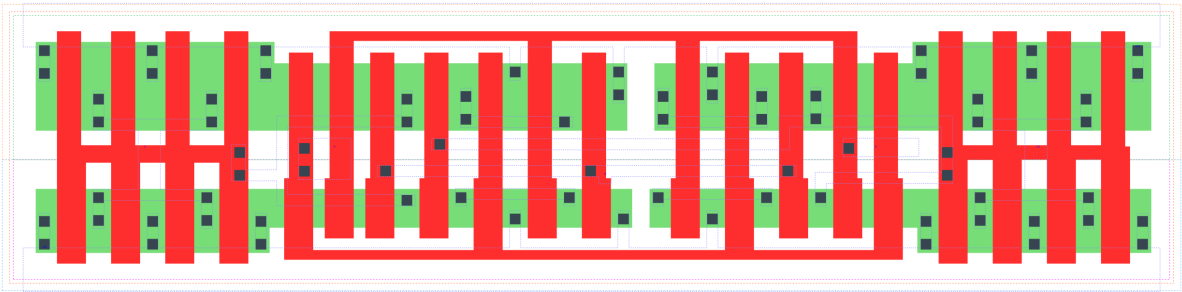

ADDF_X4 is a 1 bit Full Adder with 4X drive strength

Attributes

Attribute	Value
area	118.540800 μm^2

OUTPUT FUNCTIONS

Output Pin	Function
S	(A^B^CI)
CO	((A&B)|(A&CI)|(B&CI))

TRUTH TABLE FOR S

A	B	CI	S
1	1	1	1
1	0	0	1
0	1	0	1
0	0	1	1
1	1	0	0
1	0	1	0
0	1	1	0
0	0	0	0

TRUTH TABLE FOR CO

A	B	CI	CO
1	1	?	1
1	?	1	1
?	1	1	1
0	0	?	0
0	?	0	0
?	0	0	0

FUNCTIONAL SCHEMATIC

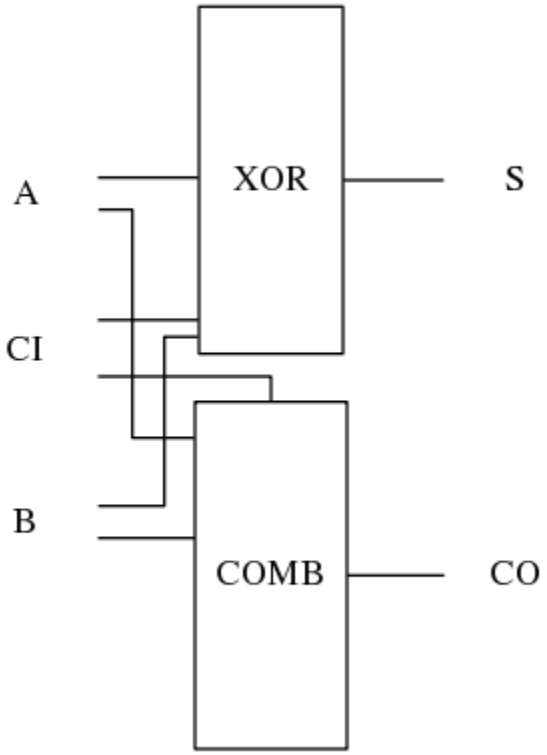

PIN CAPACITANCE (pf)

Pin	Type	Capacitance (pf)
A	input	0.0191
CI	input	0.0142
B	input	0.0184

DELAY AND OUTPUT TRANSITION TIME corresponding to min slew and load

Input Pin	Output	When Condition	Tin (ns)	Out Load (pf)	Delay (ns)	Tout (ns)
A(HL)	S(LH)	!B&CI	0.0100	0.0010	1.1601	0.0612
A(HL)	S(LH)	B&!CI	0.0100	0.0010	1.1707	0.0599
A(HL)	S(HL)	!B&!CI	0.0100	0.0010	0.7260	0.1031
A(HL)	S(HL)	B&CI	0.0100	0.0010	0.5198	0.0763
A(LH)	CO(LH)	!B&CI	0.0100	0.0010	0.4784	0.0577
A(LH)	CO(LH)	B&!CI	0.0100	0.0010	0.4924	0.0585
A(LH)	S(LH)	!B&!CI	0.0100	0.0010	0.4482	0.0553
A(LH)	S(LH)	B&CI	0.0100	0.0010	0.5785	0.0692
A(HL)	CO(HL)	!B&CI	0.0100	0.0010	0.5657	0.0830
A(HL)	CO(HL)	B&!CI	0.0100	0.0010	0.5582	0.0808
A(LH)	S(HL)	!B&CI	0.0100	0.0010	0.9475	0.0761
A(LH)	S(HL)	B&!CI	0.0100	0.0010	0.9408	0.0780
CI(HL)	S(LH)	!A&B	0.0100	0.0010	1.1229	0.0600
CI(HL)	S(LH)	A&!B	0.0100	0.0010	1.1474	0.0618
CI(HL)	CO(HL)	!A&B	0.0100	0.0010	0.5149	0.0809
CI(HL)	CO(HL)	A&!B	0.0100	0.0010	0.4949	0.0831
CI(LH)	S(HL)	!A&B	0.0100	0.0010	0.9305	0.0790
CI(LH)	S(HL)	A&!B	0.0100	0.0010	0.9217	0.0760
CI(LH)	S(LH)	!A&!B	0.0100	0.0010	0.4070	0.0543
CI(LH)	S(LH)	A&B	0.0100	0.0010	0.5755	0.0696
CI(HL)	S(HL)	!A&!B	0.0100	0.0010	0.6952	0.1032
CI(HL)	S(HL)	A&B	0.0100	0.0010	0.4766	0.0750
CI(LH)	CO(LH)	!A&B	0.0100	0.0010	0.4324	0.0574
CI(LH)	CO(LH)	A&!B	0.0100	0.0010	0.4535	0.0576
B(LH)	S(LH)	!A&!CI	0.0100	0.0010	0.4240	0.0533
B(LH)	S(LH)	A&CI	0.0100	0.0010	0.5759	0.0696
B(LH)	CO(LH)	!A&CI	0.0100	0.0010	0.4528	0.0574
B(LH)	CO(LH)	A&!CI	0.0100	0.0010	0.4957	0.0585
B(HL)	S(HL)	!A&!CI	0.0100	0.0010	0.7206	0.1030
B(HL)	S(HL)	A&CI	0.0100	0.0010	0.5008	0.0735
B(HL)	S(LH)	!A&CI	0.0100	0.0010	1.1611	0.0609
B(HL)	S(LH)	A&!CI	0.0100	0.0010	1.1810	0.0614
B(HL)	CO(HL)	!A&CI	0.0100	0.0010	0.5662	0.0832
B(HL)	CO(HL)	A&!CI	0.0100	0.0010	0.5298	0.0819
B(LH)	S(HL)	!A&CI	0.0100	0.0010	0.9504	0.0787
B(LH)	S(HL)	A&!CI	0.0100	0.0010	0.9449	0.0783

DYNAMIC ENERGY

Input Pin	When Condition	Tin (ns)	Output	Out Load (pf)	Energy (uW/MHz)
B	!A&!CI	0.0100	S(LH)	0.0010	0.9250
B	A&CI	0.0100	S(LH)	0.0010	1.2652

continues on next page

Table 159 – continued from previous page

B	!A&CI	0.0100	S(LH)	0.0010	1.7002
B	A&!CI	0.0100	S(LH)	0.0010	1.6934
A	!B&CI	0.0100	S(LH)	0.0010	1.7030
A	B&!CI	0.0100	S(LH)	0.0010	1.6698
A	!B&!CI	0.0100	S(LH)	0.0010	0.9782
A	B&CI	0.0100	S(LH)	0.0010	1.2284
B	!A&CI	0.0100	CO(LH)	0.0010	1.3421
B	A&!CI	0.0100	CO(LH)	0.0010	1.3794
CI	!A&B	0.0100	S(LH)	0.0010	1.6238
CI	A&!B	0.0100	S(LH)	0.0010	1.6646
CI	!A&!B	0.0100	S(LH)	0.0010	0.9920
CI	A&B	0.0100	S(LH)	0.0010	1.3243
CI	!A&B	0.0100	CO(HL)	0.0010	1.6221
CI	A&!B	0.0100	CO(HL)	0.0010	1.6613
B	!A&!CI	0.0100	S(HL)	0.0010	2.3500
B	A&CI	0.0100	S(HL)	0.0010	1.7478
B	!A&CI	0.0100	S(HL)	0.0010	1.3799
B	A&!CI	0.0100	S(HL)	0.0010	1.4137
CI	!A&B	0.0100	S(HL)	0.0010	1.4191
CI	A&!B	0.0100	S(HL)	0.0010	1.3863
CI	!A&!B	0.0100	S(HL)	0.0010	2.2839
CI	A&B	0.0100	S(HL)	0.0010	1.7303
A	!B&!CI	0.0100	S(HL)	0.0010	2.3705
A	B&CI	0.0100	S(HL)	0.0010	1.8701
A	!B&CI	0.0100	S(HL)	0.0010	1.3482
A	B&!CI	0.0100	S(HL)	0.0010	1.3855
A	!B&CI	0.0100	CO(LH)	0.0010	1.3113
A	B&!CI	0.0100	CO(LH)	0.0010	1.3516
B	!A&CI	0.0100	CO(HL)	0.0010	1.6996
B	A&!CI	0.0100	CO(HL)	0.0010	1.6900
CI	!A&B	0.0100	CO(LH)	0.0010	1.3796
CI	A&!B	0.0100	CO(LH)	0.0010	1.3494
A	!B&CI	0.0100	CO(HL)	0.0010	1.7013
A	B&!CI	0.0100	CO(HL)	0.0010	1.6715

LEAKAGE POWER

When Condition	Power (nW)
!A&!B&!CI	0.4461
!A&!B&CI	0.4236
!A&B&!CI	0.4393
A&!B&!CI	0.4347
!A&B&CI	0.4429
A&!B&CI	0.4393
A&B&!CI	0.4184
A&B&CI	0.4346

gf180mcu_fd_sc_mcu9t5v0__addh_1

gf180mcu_fd_sc_mcu9t5v0__addh_1 symbol

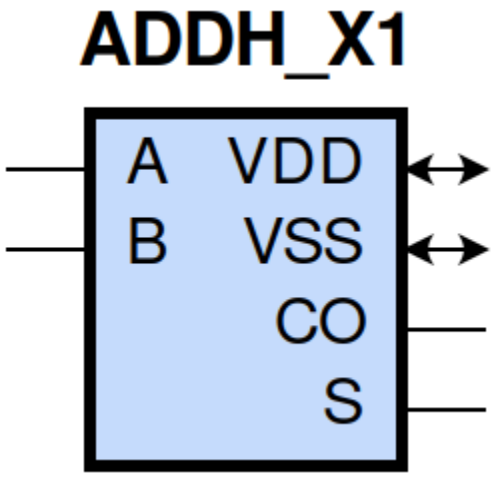

gf180mcu_fd_sc_mcu9t5v0__addh_1 schematic

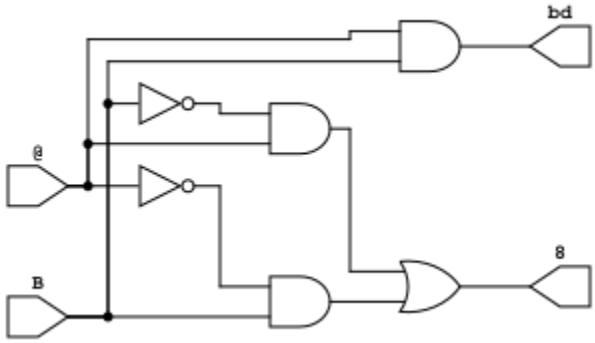

gf180mcu_fd_sc_mcu9t5v0__addh_1 layout

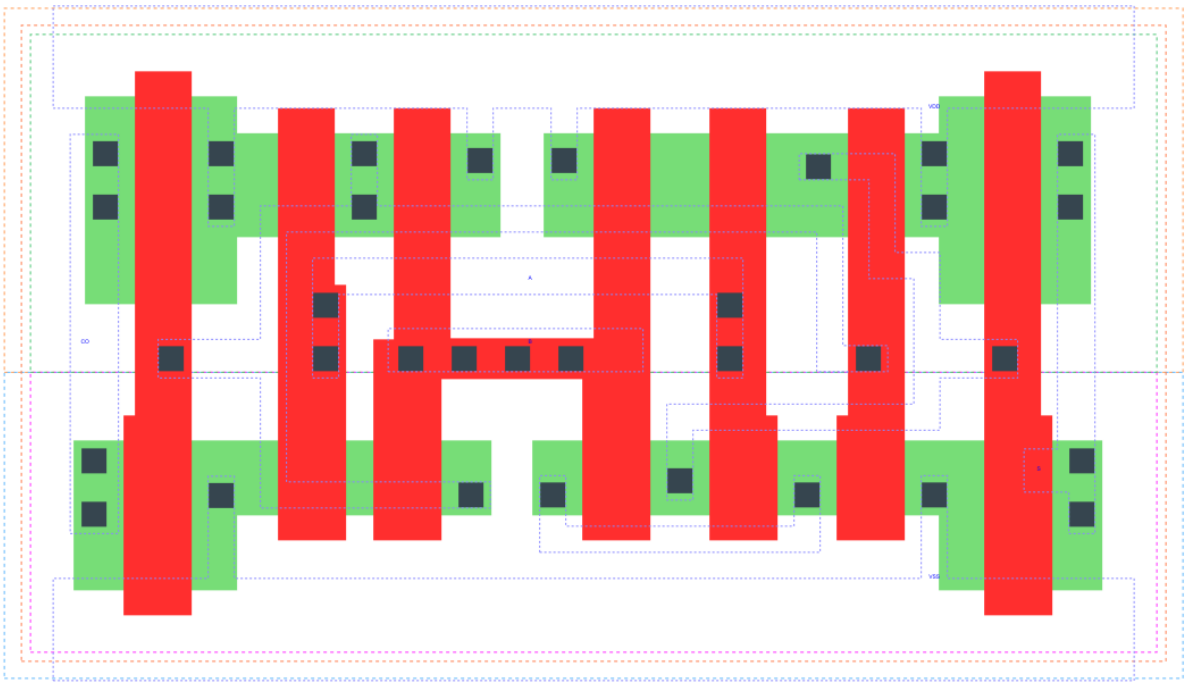

ADDH_X1 is a 1 bit Half Adder with 1X drive strength

Attributes

Attribute	Value
area	47.980800 μm^2

OUTPUT FUNCTIONS

Output Pin	Function
CO	(A&B)
S	(A^B)

TRUTH TABLE FOR CO

A	B	CO
1	1	1
0	?	0
?	0	0

TRUTH TABLE FOR S

A	B	S
1	0	1
0	1	1
1	1	0
0	0	0

FUNCTIONAL SCHEMATIC

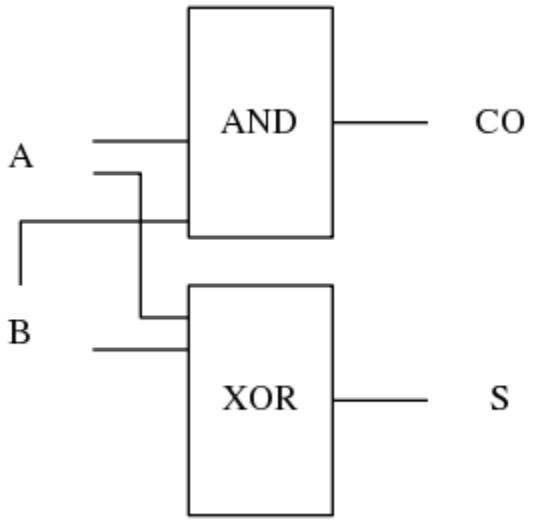

PIN CAPACITANCE (pf)

Pin	Type	Capacitance (pf)
A	input	0.0082
B	input	0.0069

DELAY AND OUTPUT TRANSITION TIME corresponding to min slew and load

Input Pin	Output	When Condition	Tin (ns)	Out Load (pf)	Delay (ns)	Tout (ns)
A(HL)	S(LH)	B	0.0100	0.0010	0.4741	0.0440
A(HL)	S(HL)	!B	0.0100	0.0010	0.2799	0.0516
A(LH)	CO(LH)	B	0.0100	0.0010	0.2673	0.0473
A(LH)	S(LH)	!B	0.0100	0.0010	0.1987	0.0412
A(HL)	CO(HL)	B	0.0100	0.0010	0.2421	0.0459
A(LH)	S(HL)	B	0.0100	0.0010	0.4614	0.0443
B(LH)	S(LH)	!A	0.0100	0.0010	0.2259	0.0429
B(LH)	CO(LH)	A	0.0100	0.0010	0.2566	0.0474
B(HL)	S(HL)	!A	0.0100	0.0010	0.3052	0.0516
B(HL)	S(LH)	A	0.0100	0.0010	0.4303	0.0428
B(HL)	CO(HL)	A	0.0100	0.0010	0.2267	0.0432
B(LH)	S(HL)	A	0.0100	0.0010	0.4497	0.0442

DYNAMIC ENERGY

Input Pin	When Condition	Tin (ns)	Output	Out Load (pf)	Energy (uW/MHz)
B	!A	0.0100	S(LH)	0.0010	0.1803
B	A	0.0100	S(LH)	0.0010	0.3087
A	B	0.0100	S(LH)	0.0010	0.3375
A	!B	0.0100	S(LH)	0.0010	0.1486
B	A	0.0100	CO(LH)	0.0010	0.2772
B	!A	0.0100	S(HL)	0.0010	0.3827
B	A	0.0100	S(HL)	0.0010	0.2846
A	!B	0.0100	S(HL)	0.0010	0.3599
A	B	0.0100	S(HL)	0.0010	0.2942
A	B	0.0100	CO(LH)	0.0010	0.2868
B	A	0.0100	CO(HL)	0.0010	0.3205
A	B	0.0100	CO(HL)	0.0010	0.3494

LEAKAGE POWER

When Condition	Power (nW)
!A&!B	0.1798
!A&B	0.2563
A&!B	0.1805
A&B	0.2646

gf180mcu_fd_sc_mcu9t5v0__addh_2

gf180mcu_fd_sc_mcu9t5v0__addh_2 symbol

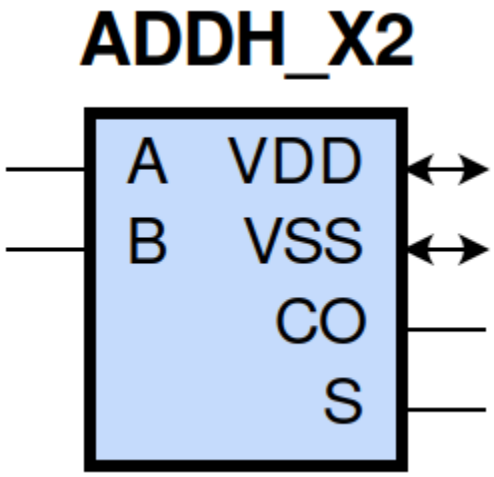

gf180mcu_fd_sc_mcu9t5v0__addh_2 schematic

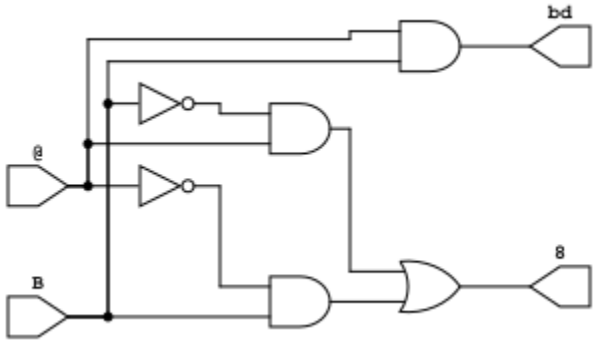

gf180mcu_fd_sc_mcu9t5v0__addh_2 layout

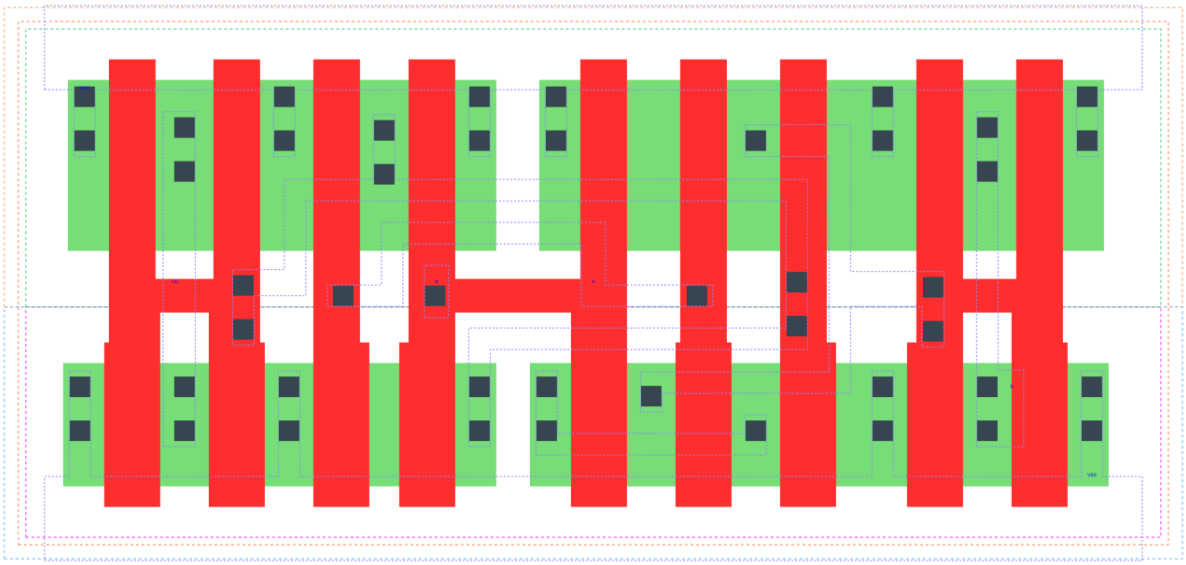

ADDH_X2 is a 1 bit Half Adder with 2X drive strength

Attributes

Attribute	Value
area	59.270400 μm^2

OUTPUT FUNCTIONS

Output Pin	Function
CO	(A&B)
S	(A^B)

TRUTH TABLE FOR CO

A	B	CO
1	1	1
0	?	0
?	0	0

TRUTH TABLE FOR S

A	B	S
1	0	1
0	1	1
1	1	0
0	0	0

FUNCTIONAL SCHEMATIC

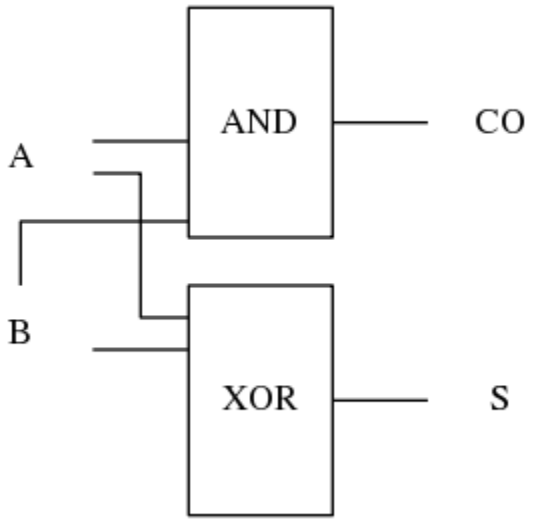

PIN CAPACITANCE (pf)

Pin	Type	Capacitance (pf)
A	input	0.0134
B	input	0.0114

DELAY AND OUTPUT TRANSITION TIME corresponding to min slew and load

Input Pin	Output	When Condition	Tin (ns)	Out Load (pf)	Delay (ns)	Tout (ns)
A(HL)	S(LH)	B	0.0100	0.0010	0.4179	0.0335
A(HL)	S(HL)	!B	0.0100	0.0010	0.2402	0.0396
A(LH)	CO(LH)	B	0.0100	0.0010	0.2305	0.0355
A(LH)	S(LH)	!B	0.0100	0.0010	0.1742	0.0307
A(HL)	CO(HL)	B	0.0100	0.0010	0.2037	0.0344
A(LH)	S(HL)	B	0.0100	0.0010	0.4038	0.0338
B(LH)	S(LH)	!A	0.0100	0.0010	0.2015	0.0324
B(LH)	CO(LH)	A	0.0100	0.0010	0.2194	0.0353
B(HL)	S(HL)	!A	0.0100	0.0010	0.2645	0.0396
B(HL)	S(LH)	A	0.0100	0.0010	0.3740	0.0322
B(HL)	CO(HL)	A	0.0100	0.0010	0.1883	0.0320
B(LH)	S(HL)	A	0.0100	0.0010	0.3915	0.0337

DYNAMIC ENERGY

Input Pin	When Condition	Tin (ns)	Output	Out Load (pf)	Energy (uW/MHz)
B	!A	0.0100	S(LH)	0.0010	0.3100
B	A	0.0100	S(LH)	0.0010	0.5369
A	B	0.0100	S(LH)	0.0010	0.5930
A	!B	0.0100	S(LH)	0.0010	0.2471
B	A	0.0100	CO(LH)	0.0010	0.4846
B	!A	0.0100	S(HL)	0.0010	0.6952
B	A	0.0100	S(HL)	0.0010	0.4932
A	!B	0.0100	S(HL)	0.0010	0.6499
A	B	0.0100	S(HL)	0.0010	0.5125
A	B	0.0100	CO(LH)	0.0010	0.5032
B	A	0.0100	CO(HL)	0.0010	0.5511
A	B	0.0100	CO(HL)	0.0010	0.6080

LEAKAGE POWER

When Condition	Power (nW)
!A&!B	0.2338
!A&B	0.3094
A&!B	0.2342
A&B	0.3186

gf180mcu_fd_sc_mcu9t5v0__addh_4

gf180mcu_fd_sc_mcu9t5v0__addh_4 symbol

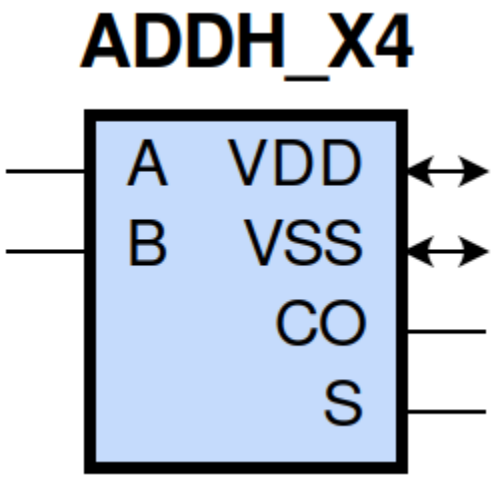

gf180mcu_fd_sc_mcu9t5v0__addh_4 schematic

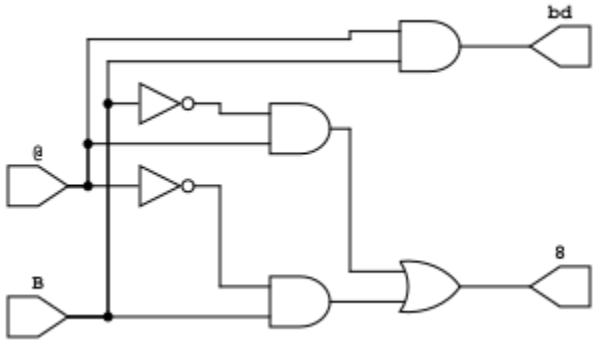

gf180mcu_fd_sc_mcu9t5v0__addh_4 layout

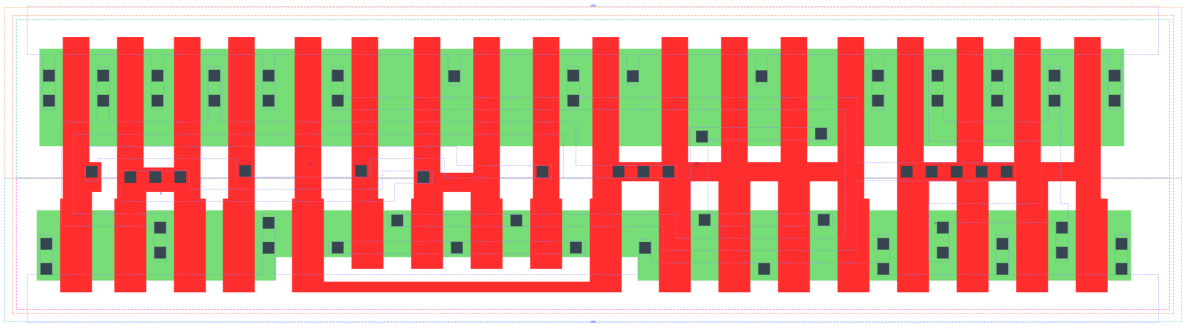

ADDH_X4 is a 1 bit Half Adder with 4X drive strength

Attributes

Attribute	Value
area	107.251200 μm^2

OUTPUT FUNCTIONS

Output Pin	Function
CO	(A&B)
S	(A^B)

TRUTH TABLE FOR CO

A	B	CO
1	1	1
0	?	0
?	0	0

TRUTH TABLE FOR S

A	B	S
1	0	1
0	1	1
1	1	0
0	0	0

FUNCTIONAL SCHEMATIC

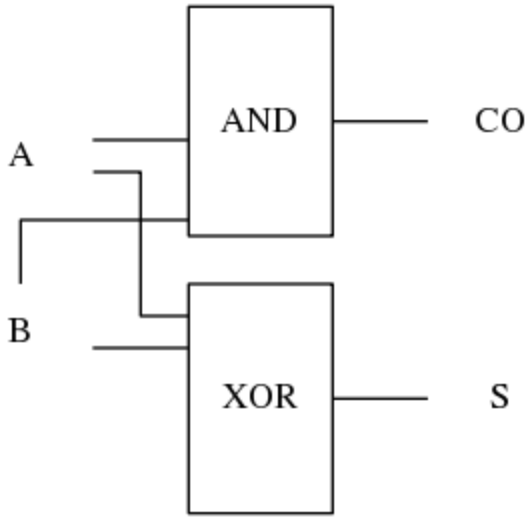

PIN CAPACITANCE (pf)

Pin	Type	Capacitance (pf)
A	input	0.0254
B	input	0.0222

DELAY AND OUTPUT TRANSITION TIME corresponding to min slew and load

Input Pin	Output	When Condition	Tin (ns)	Out Load (pf)	Delay (ns)	Tout (ns)
A(HL)	S(LH)	B	0.0100	0.0010	0.4943	0.0399
A(HL)	S(HL)	!B	0.0100	0.0010	0.2398	0.0401
A(LH)	CO(LH)	B	0.0100	0.0010	0.2150	0.0322
A(LH)	S(LH)	!B	0.0100	0.0010	0.2447	0.0375
A(HL)	CO(HL)	B	0.0100	0.0010	0.1916	0.0314
A(LH)	S(HL)	B	0.0100	0.0010	0.3736	0.0321
B(LH)	S(LH)	!A	0.0100	0.0010	0.2880	0.0395
B(LH)	CO(LH)	A	0.0100	0.0010	0.2035	0.0320
B(HL)	S(HL)	!A	0.0100	0.0010	0.2650	0.0402
B(HL)	S(LH)	A	0.0100	0.0010	0.4359	0.0382
B(HL)	CO(HL)	A	0.0100	0.0010	0.1756	0.0287
B(LH)	S(HL)	A	0.0100	0.0010	0.3608	0.0321

DYNAMIC ENERGY

Input Pin	When Condition	Tin (ns)	Output	Out Load (pf)	Energy (uW/MHz)
B	!A	0.0100	S(LH)	0.0010	0.7704
B	A	0.0100	S(LH)	0.0010	1.0946
A	B	0.0100	S(LH)	0.0010	1.2182
A	!B	0.0100	S(LH)	0.0010	0.6179
B	A	0.0100	CO(LH)	0.0010	0.9092
B	!A	0.0100	S(HL)	0.0010	1.4346
B	A	0.0100	S(HL)	0.0010	0.9183
A	!B	0.0100	S(HL)	0.0010	1.3433
A	B	0.0100	S(HL)	0.0010	0.9573
A	B	0.0100	CO(LH)	0.0010	0.9472
B	A	0.0100	CO(HL)	0.0010	1.0748
A	B	0.0100	CO(HL)	0.0010	1.2001

LEAKAGE POWER

When Condition	Power (nW)
!A&!B	0.4172
!A&B	0.5688
A&!B	0.4183
A&B	0.5881

gf180mcu_fd_sc_mcu9t5v0__and2_1

gf180mcu_fd_sc_mcu9t5v0__and2_1 symbol

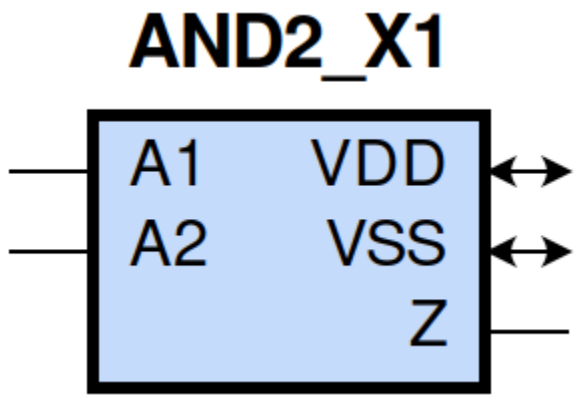

gf180mcu_fd_sc_mcu9t5v0__and2_1 schematic

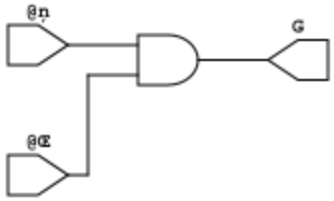

gf180mcu_fd_sc_mcu9t5v0__and2_1 layout

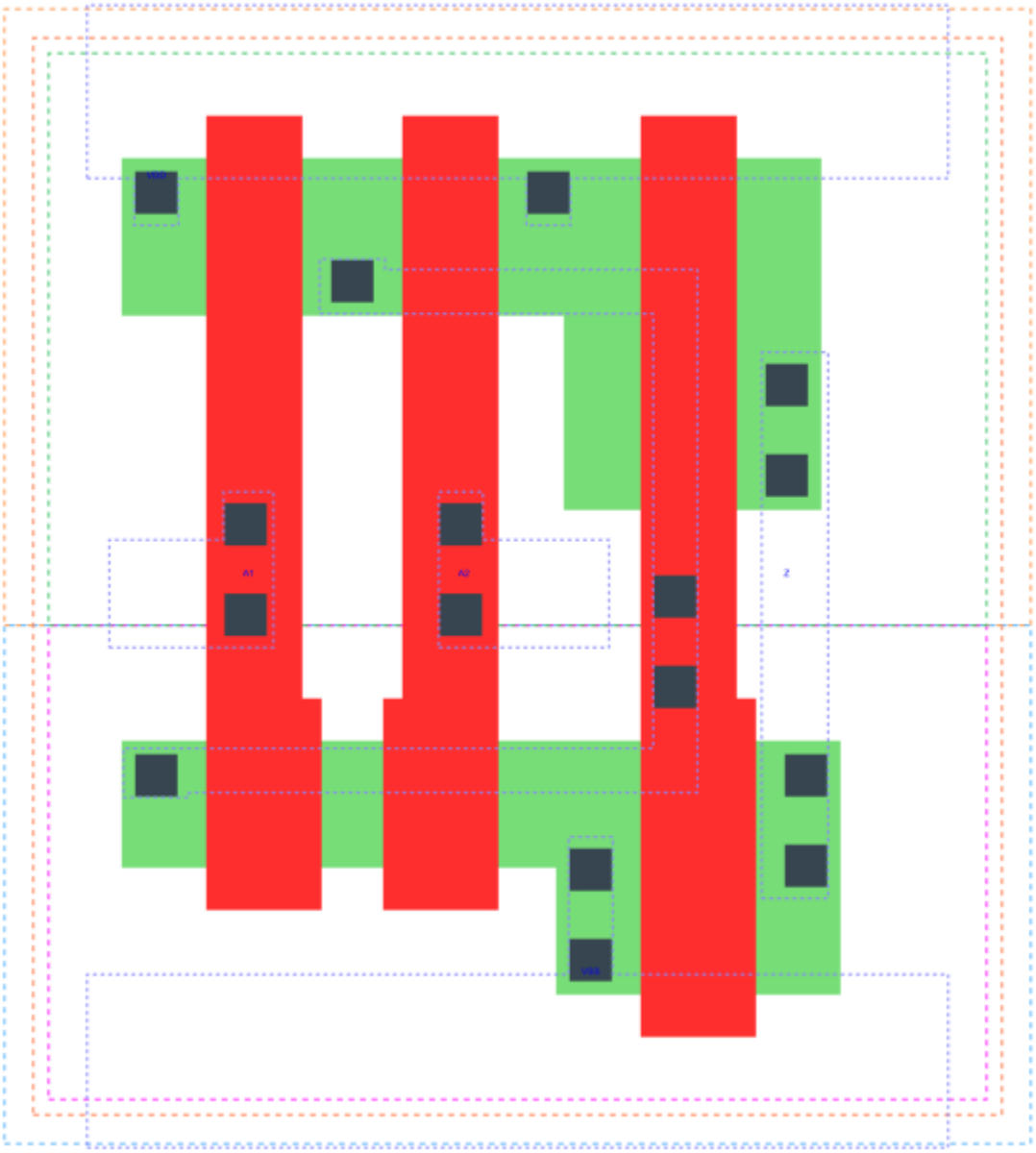

AND2_X1 is a 2-input AND with 1X drive strength

Attributes

Attribute	Value
area	22.579200 μm^2

OUTPUT FUNCTIONS

Output Pin	Function
Z	(A1&A2)

TRUTH TABLE FOR Z

A1	A2	Z
1	1	1
0	?	0
?	0	0

FUNCTIONAL SCHEMATIC

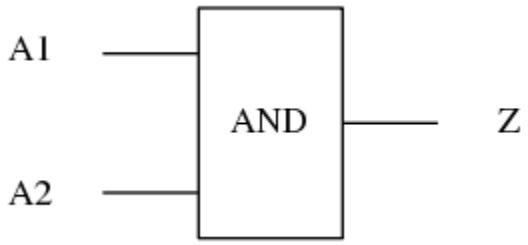

PIN CAPACITANCE (pf)

Pin	Type	Capacitance (pf)
A1	input	0.0039
A2	input	0.0038

DELAY AND OUTPUT TRANSITION TIME corresponding to min slew and load

Input Pin	Output	When Condition	Tin (ns)	Out Load (pf)	Delay (ns)	Tout (ns)
A1(LH)	Z(LH)	A2	0.0100	0.0010	0.1882	0.0394
A1(HL)	Z(HL)	A2	0.0100	0.0010	0.1824	0.0351
A2(HL)	Z(HL)	A1	0.0100	0.0010	0.2016	0.0385
A2(LH)	Z(LH)	A1	0.0100	0.0010	0.1993	0.0394

DYNAMIC ENERGY

Input Pin	When Condition	Tin (ns)	Output	Out Load (pf)	Energy (uW/MHz)
A2	A1	0.0100	Z(HL)	0.0010	0.3067
A2	A1	0.0100	Z(LH)	0.0010	0.1614
A1	A2	0.0100	Z(LH)	0.0010	0.1614
A1	A2	0.0100	Z(HL)	0.0010	0.2695
A2(LH)	!A1	0.0100	n/a	n/a	-0.0262
A1(LH)	!A2	0.0100	n/a	n/a	-0.0178
A1(HL)	!A2	0.0100	n/a	n/a	0.0300
A2(HL)	!A1	0.0100	n/a	n/a	0.0297

LEAKAGE POWER

When Condition	Power (nW)
!A1&!A2	0.1021
!A1&A2	0.1023
A1&!A2	0.1423
A1&A2	0.1281

gf180mcu_fd_sc_mcu9t5v0__and2_2

gf180mcu_fd_sc_mcu9t5v0__and2_2 symbol

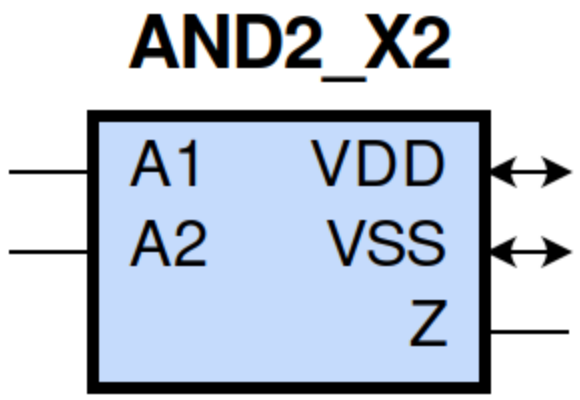

gf180mcu_fd_sc_mcu9t5v0__and2_2 schematic

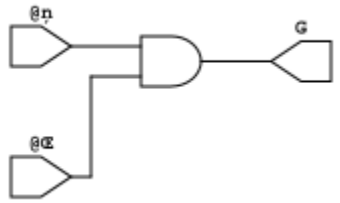

gf180mcu_fd_sc_mcu9t5v0__and2_2 layout

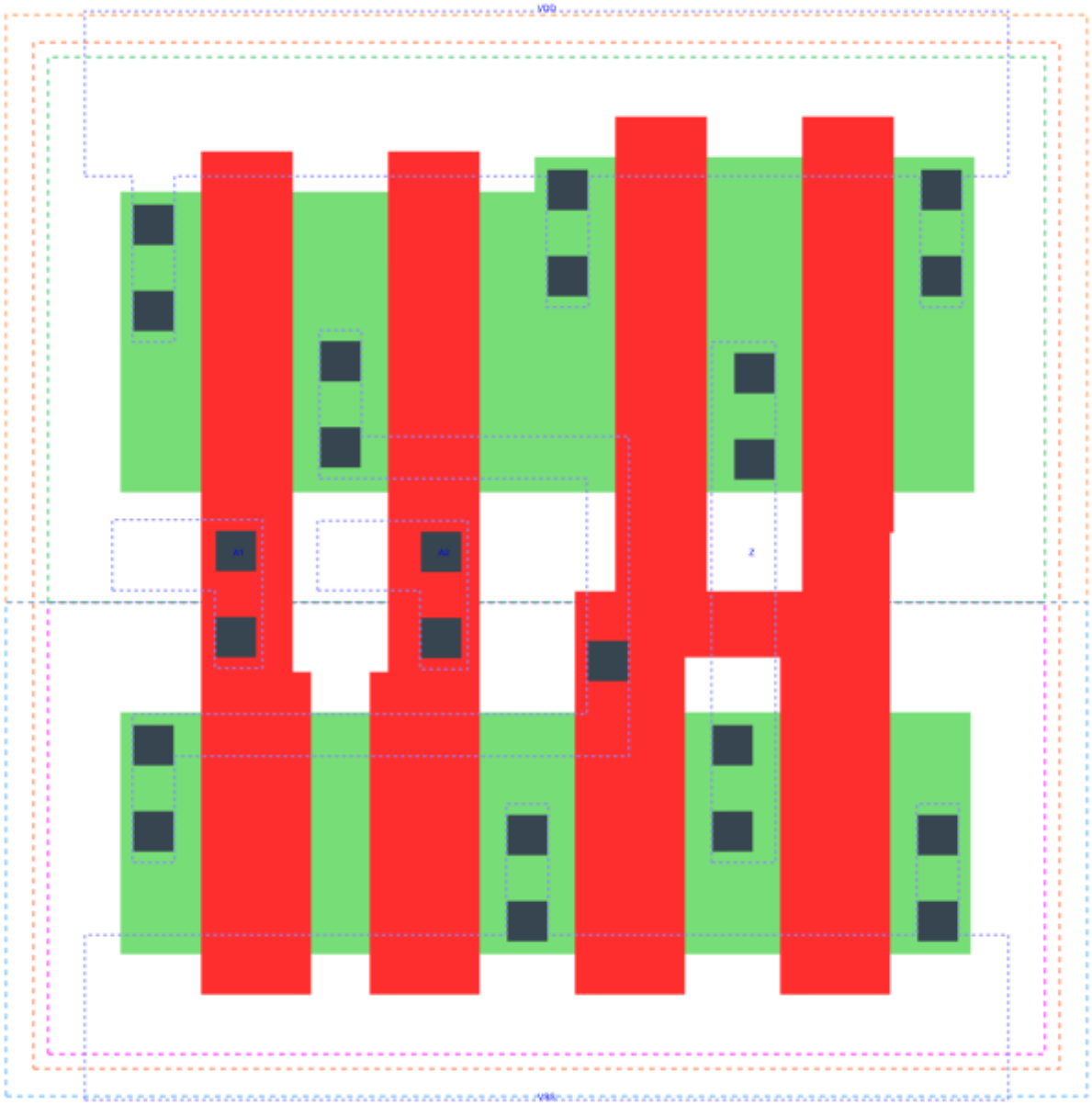

AND2_X2 is a 2-input AND with 2X drive strength

Attributes

Attribute	Value
area	25.401600 μm^2

OUTPUT FUNCTIONS

Output Pin	Function
Z	(A1&A2)

TRUTH TABLE FOR Z

A1	A2	Z
1	1	1
0	?	0
?	0	0

FUNCTIONAL SCHEMATIC

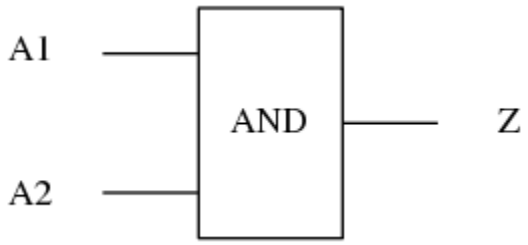

PIN CAPACITANCE (pf)

Pin	Type	Capacitance (pf)
A1	input	0.0067
A2	input	0.0066

DELAY AND OUTPUT TRANSITION TIME corresponding to min slew and load

Input Pin	Output	When Condition	Tin (ns)	Out Load (pf)	Delay (ns)	Tout (ns)
A1(LH)	Z(LH)	A2	0.0100	0.0010	0.1659	0.0293
A1(HL)	Z(HL)	A2	0.0100	0.0010	0.1572	0.0266
A2(HL)	Z(HL)	A1	0.0100	0.0010	0.1752	0.0297
A2(LH)	Z(LH)	A1	0.0100	0.0010	0.1773	0.0295

DYNAMIC ENERGY

Input Pin	When Condition	Tin (ns)	Output	Out Load (pf)	Energy (uW/MHz)
A2	A1	0.0100	Z(HL)	0.0010	0.5511
A2	A1	0.0100	Z(LH)	0.0010	0.2863
A1	A2	0.0100	Z(LH)	0.0010	0.2860
A1	A2	0.0100	Z(HL)	0.0010	0.4777
A2(LH)	!A1	0.0100	n/a	n/a	-0.0532
A1(LH)	!A2	0.0100	n/a	n/a	-0.0382
A1(HL)	!A2	0.0100	n/a	n/a	0.0607
A2(HL)	!A1	0.0100	n/a	n/a	0.0601

LEAKAGE POWER

When Condition	Power (nW)
!A1&!A2	0.1290
!A1&A2	0.1293
A1&!A2	0.1691
A1&A2	0.1547

gf180mcu_fd_sc_mcu9t5v0__and2_4

gf180mcu_fd_sc_mcu9t5v0__and2_4 symbol

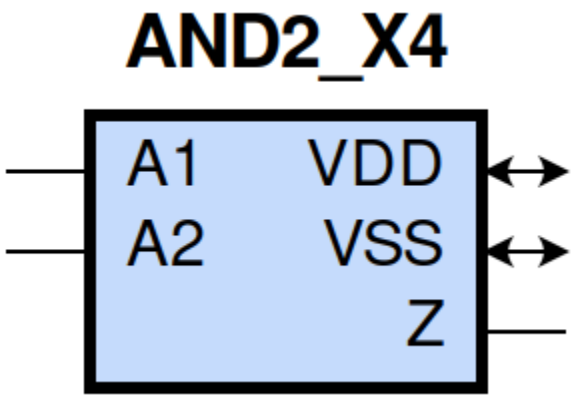

gf180mcu_fd_sc_mcu9t5v0__and2_4 schematic

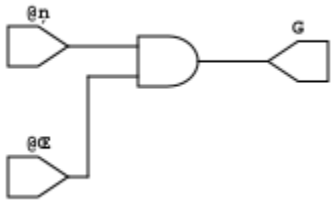

gf180mcu_fd_sc_mcu9t5v0__and2_4 layout

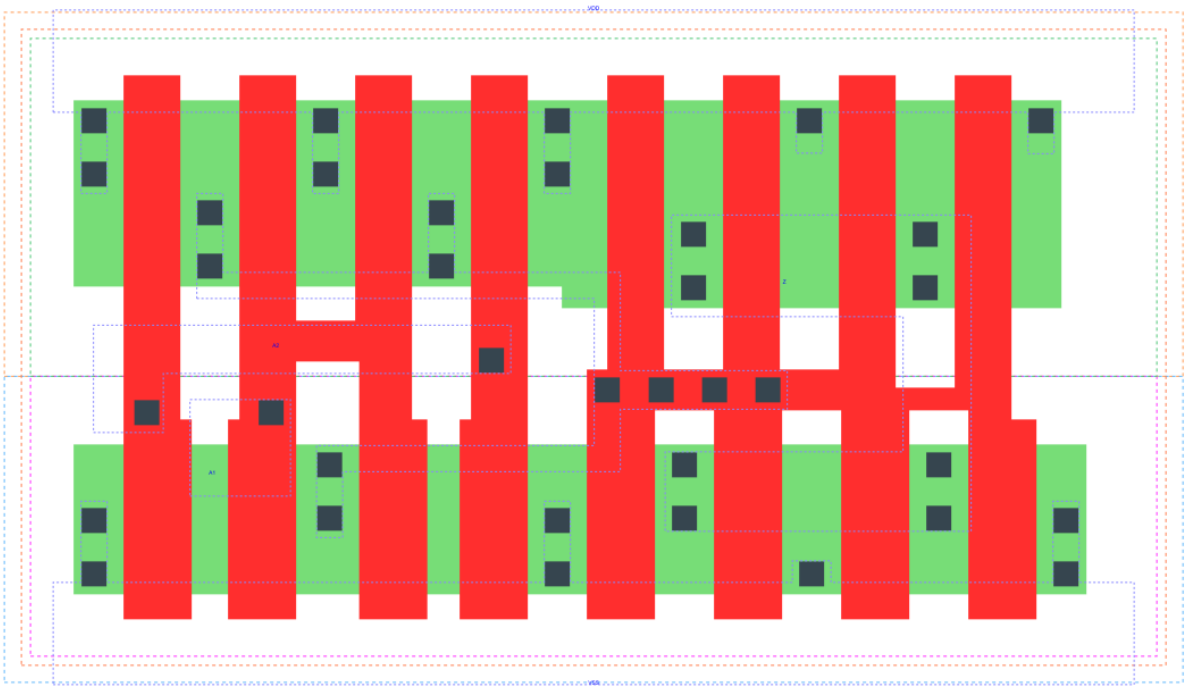

AND2_X4 is a 2-input AND with 4X drive strength

Attributes

Attribute	Value
area	47.980800 μm^2

OUTPUT FUNCTIONS

Output Pin	Function
Z	(A1&A2)

TRUTH TABLE FOR Z

A1	A2	Z
1	1	1
0	?	0
?	0	0

FUNCTIONAL SCHEMATIC

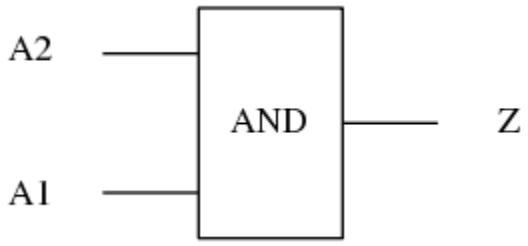

PIN CAPACITANCE (pf)

Pin	Type	Capacitance (pf)
A2	input	0.0137
A1	input	0.0131

DELAY AND OUTPUT TRANSITION TIME corresponding to min slew and load

Input Pin	Output	When Condition	Tin (ns)	Out Load (pf)	Delay (ns)	Tout (ns)
A2(HL)	Z(HL)	A1	0.0100	0.0010	0.1690	0.0284
A2(LH)	Z(LH)	A1	0.0100	0.0010	0.1708	0.0282
A1(LH)	Z(LH)	A2	0.0100	0.0010	0.1596	0.0280
A1(HL)	Z(HL)	A2	0.0100	0.0010	0.1512	0.0253

DYNAMIC ENERGY

Input Pin	When Condition	Tin (ns)	Output	Out Load (pf)	Energy (uW/MHz)
A2	A1	0.0100	Z(HL)	0.0010	1.0581
A2	A1	0.0100	Z(LH)	0.0010	0.5771
A1	A2	0.0100	Z(LH)	0.0010	0.5768
A1	A2	0.0100	Z(HL)	0.0010	0.9121
A2(LH)	!A1	0.0100	n/a	n/a	-0.1065
A1(LH)	!A2	0.0100	n/a	n/a	-0.0775
A1(HL)	!A2	0.0100	n/a	n/a	0.1214
A2(HL)	!A1	0.0100	n/a	n/a	0.1204

LEAKAGE POWER

When Condition	Power (nW)
!A1&!A2	0.2079
!A1&A2	0.2086
A1&!A2	0.2881
A1&A2	0.2593

gf180mcu_fd_sc_mcu9t5v0__and3_1

gf180mcu_fd_sc_mcu9t5v0__and3_1 symbol

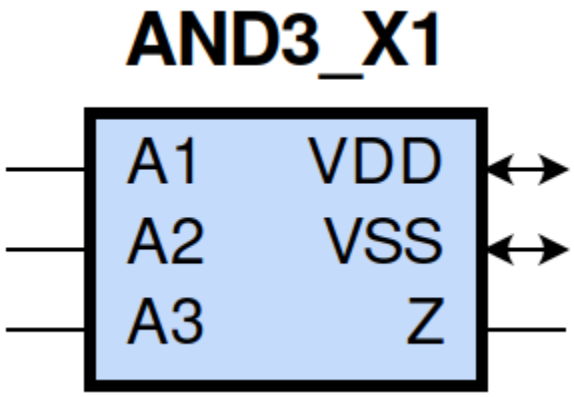

gf180mcu_fd_sc_mcu9t5v0__and3_1 schematic

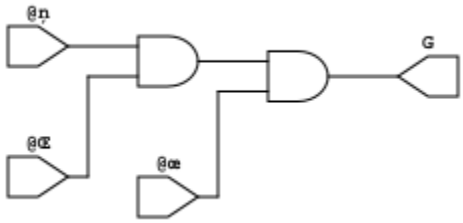

gf180mcu_fd_sc_mcu9t5v0__and3_1 layout

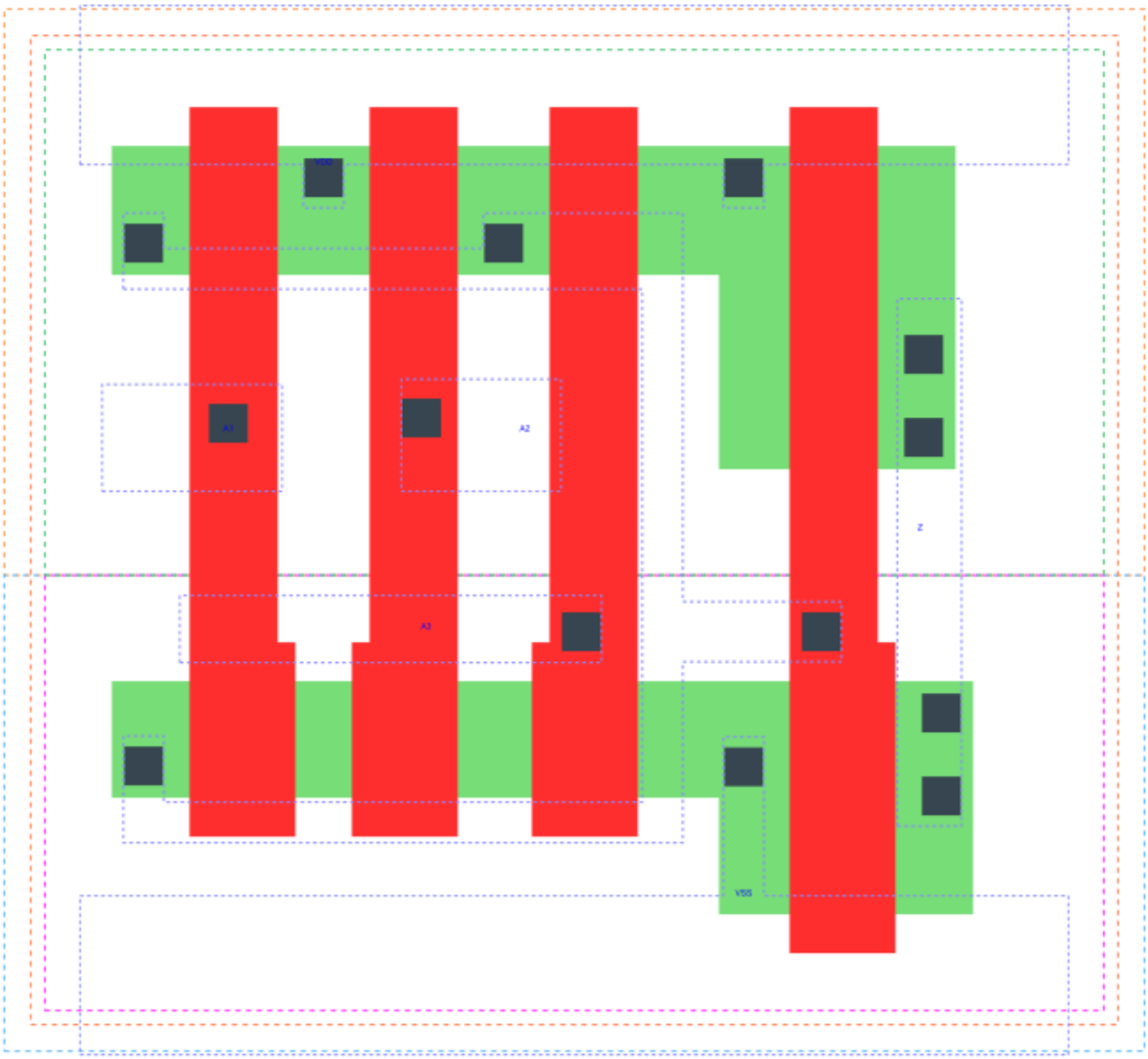

AND3_X1 is a 3-input AND with 1X drive strength

Attributes

Attribute	Value
area	28.224000 μm^2

OUTPUT FUNCTIONS

Output Pin	Function
Z	(A1&A2&A3)

TRUTH TABLE FOR Z

A1	A2	A3	Z
1	1	1	1
0	?	?	0
?	0	?	0
?	?	0	0

FUNCTIONAL SCHEMATIC

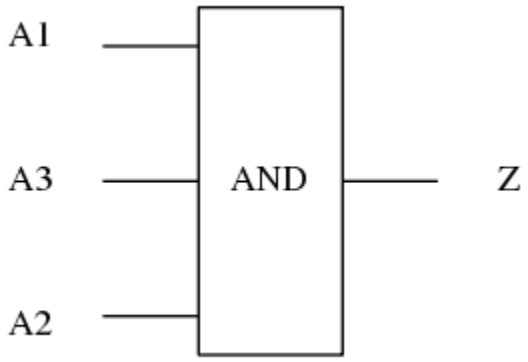

PIN CAPACITANCE (pf)

Pin	Type	Capacitance (pf)
A1	input	0.0038
A3	input	0.0038
A2	input	0.0036

DELAY AND OUTPUT TRANSITION TIME corresponding to min slew and load

Input Pin	Output	When Condition	Tin (ns)	Out Load (pf)	Delay (ns)	Tout (ns)
A1(LH)	Z(LH)	A2&A3	0.0100	0.0010	0.2631	0.0490
A1(HL)	Z(HL)	A2&A3	0.0100	0.0010	0.2226	0.0410
A3(LH)	Z(LH)	A1&A2	0.0100	0.0010	0.2944	0.0491
A3(HL)	Z(HL)	A1&A2	0.0100	0.0010	0.2672	0.0484
A2(HL)	Z(HL)	A1&A3	0.0100	0.0010	0.2463	0.0450
A2(LH)	Z(LH)	A1&A3	0.0100	0.0010	0.2829	0.0493

DYNAMIC ENERGY

Input Pin	When Condition	Tin (ns)	Output	Out Load (pf)	Energy (uW/MHz)
A3	A1&A2	0.0100	Z(LH)	0.0010	0.2062
A2	A1&A3	0.0100	Z(HL)	0.0010	0.3538
A2	A1&A3	0.0100	Z(LH)	0.0010	0.2060
A1	A2&A3	0.0100	Z(LH)	0.0010	0.2063
A3	A1&A2	0.0100	Z(HL)	0.0010	0.3952
A1	A2&A3	0.0100	Z(HL)	0.0010	0.3120
A3(LH)	!A1&!A2	0.0100	n/a	n/a	-0.0234
A3(LH)	!A1&A2	0.0100	n/a	n/a	-0.0233
A3(LH)	A1&!A2	0.0100	n/a	n/a	-0.0234
A2(LH)	!A1&!A3	0.0100	n/a	n/a	-0.0234
A2(LH)	!A1&A3	0.0100	n/a	n/a	-0.0233
A2(LH)	A1&!A3	0.0100	n/a	n/a	-0.0150
A1(LH)	!A2&!A3	0.0100	n/a	n/a	-0.0147
A1(LH)	!A2&A3	0.0100	n/a	n/a	-0.0147
A1(LH)	A2&!A3	0.0100	n/a	n/a	0.0194
A3(HL)	!A1&!A2	0.0100	n/a	n/a	0.0236
A3(HL)	!A1&A2	0.0100	n/a	n/a	0.0263
A3(HL)	A1&!A2	0.0100	n/a	n/a	0.0258
A1(HL)	!A2&!A3	0.0100	n/a	n/a	0.0271
A1(HL)	!A2&A3	0.0100	n/a	n/a	0.0271
A1(HL)	A2&!A3	0.0100	n/a	n/a	0.0270
A2(HL)	!A1&!A3	0.0100	n/a	n/a	0.0335
A2(HL)	!A1&A3	0.0100	n/a	n/a	0.0290
A2(HL)	A1&!A3	0.0100	n/a	n/a	0.0268

LEAKAGE POWER

When Condition	Power (nW)
!A1&!A2&!A3	0.1021
!A1&!A2&A3	0.1021
!A1&A2&!A3	0.1021
!A1&A2&A3	0.1023
A1&!A2&!A3	0.1422
A1&!A2&A3	0.1423
A1&A2&!A3	0.1816
A1&A2&A3	0.1542

gf180mcu_fd_sc_mcu9t5v0__and3_2

gf180mcu_fd_sc_mcu9t5v0__and3_2 symbol

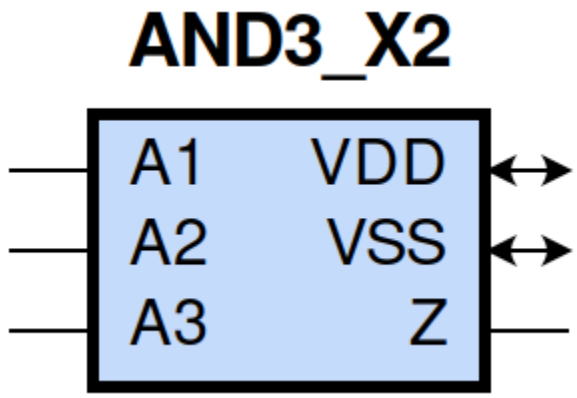

gf180mcu_fd_sc_mcu9t5v0__and3_2 schematic

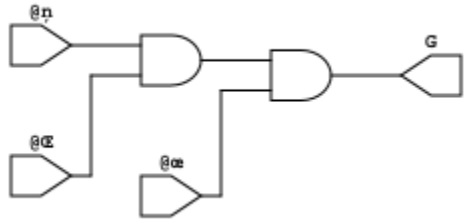

gf180mcu_fd_sc_mcu9t5v0__and3_2 layout

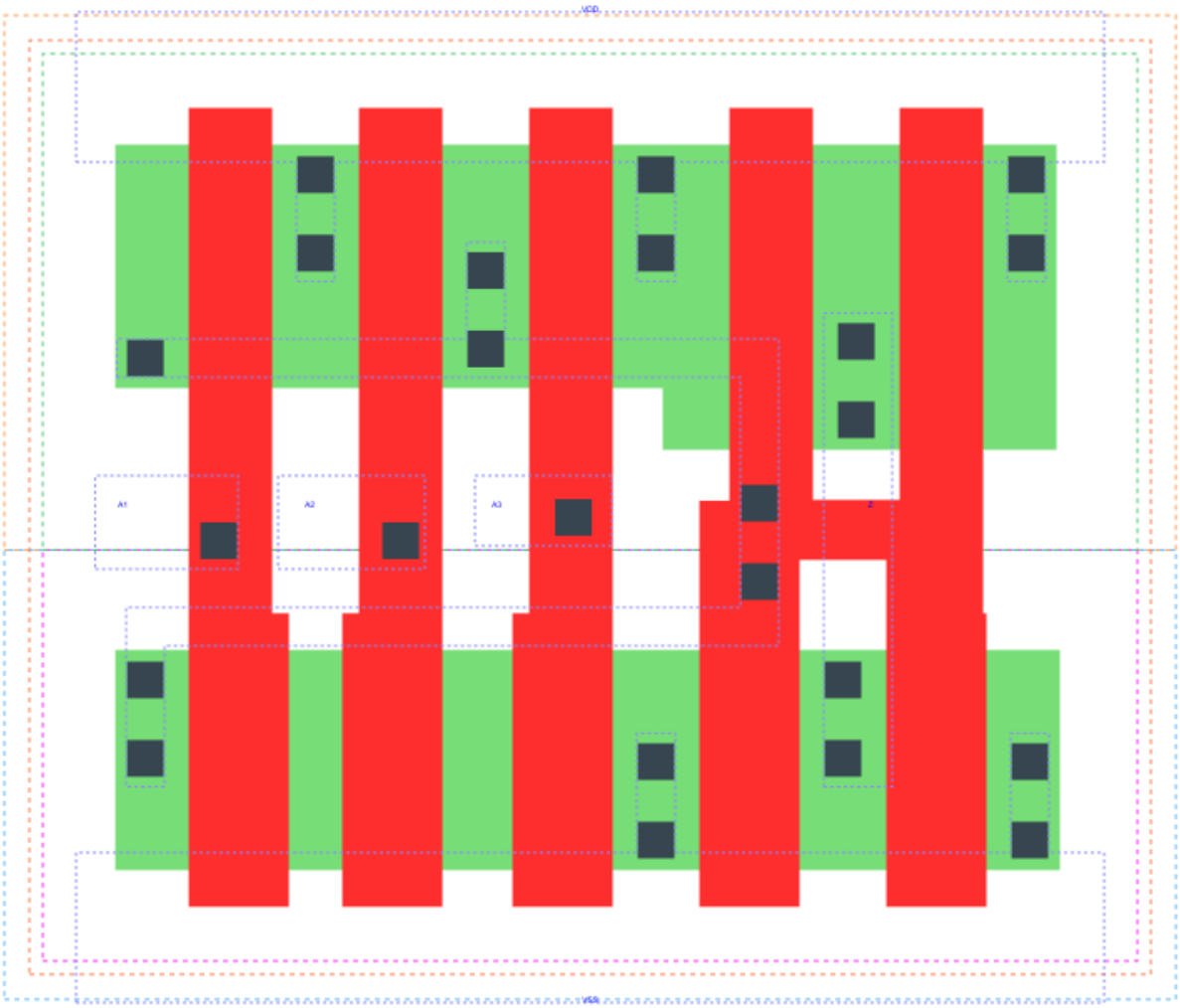

AND3_X2 is a 3-input AND with 2X drive strength

Attributes

Attribute	Value
area	31.046400 μm^2

OUTPUT FUNCTIONS

Output Pin	Function
Z	(A1&A2&A3)

TRUTH TABLE FOR Z

A1	A2	A3	Z
1	1	1	1
0	?	?	0
?	0	?	0
?	?	0	0

FUNCTIONAL SCHEMATIC

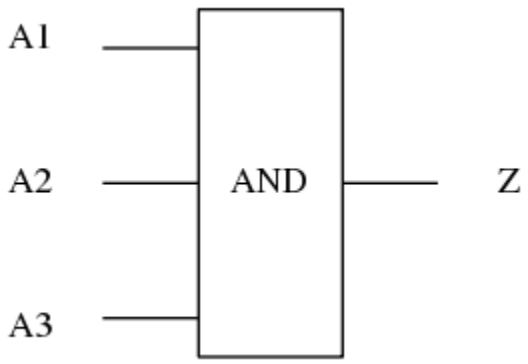

PIN CAPACITANCE (pf)

Pin	Type	Capacitance (pf)
A1	input	0.0065
A2	input	0.0063
A3	input	0.0062

DELAY AND OUTPUT TRANSITION TIME corresponding to min slew and load

Input Pin	Output	When Condition	Tin (ns)	Out Load (pf)	Delay (ns)	Tout (ns)
A1(LH)	Z(LH)	A2&A3	0.0100	0.0010	0.2233	0.0372
A1(HL)	Z(HL)	A2&A3	0.0100	0.0010	0.1853	0.0308
A2(HL)	Z(HL)	A1&A3	0.0100	0.0010	0.2081	0.0340
A2(LH)	Z(LH)	A1&A3	0.0100	0.0010	0.2433	0.0372
A3(LH)	Z(LH)	A1&A2	0.0100	0.0010	0.2543	0.0374
A3(HL)	Z(HL)	A1&A2	0.0100	0.0010	0.2275	0.0373

DYNAMIC ENERGY

Input Pin	When Condition	Tin (ns)	Output	Out Load (pf)	Energy (uW/MHz)
A3	A1&A2	0.0100	Z(LH)	0.0010	0.3670
A2	A1&A3	0.0100	Z(HL)	0.0010	0.6019
A2	A1&A3	0.0100	Z(LH)	0.0010	0.3676
A1	A2&A3	0.0100	Z(LH)	0.0010	0.3671
A3	A1&A2	0.0100	Z(HL)	0.0010	0.6818
A1	A2&A3	0.0100	Z(HL)	0.0010	0.5201
A3(LH)	!A1&!A2	0.0100	n/a	n/a	-0.0473
A3(LH)	!A1&A2	0.0100	n/a	n/a	-0.0472
A3(LH)	A1&!A2	0.0100	n/a	n/a	-0.0472
A2(LH)	!A1&!A3	0.0100	n/a	n/a	-0.0473
A2(LH)	!A1&A3	0.0100	n/a	n/a	-0.0472
A2(LH)	A1&!A3	0.0100	n/a	n/a	-0.0335
A1(LH)	!A2&!A3	0.0100	n/a	n/a	-0.0319
A1(LH)	!A2&A3	0.0100	n/a	n/a	-0.0319
A1(LH)	A2&!A3	0.0100	n/a	n/a	0.0334
A3(HL)	!A1&!A2	0.0100	n/a	n/a	0.0476
A3(HL)	!A1&A2	0.0100	n/a	n/a	0.0531
A3(HL)	A1&!A2	0.0100	n/a	n/a	0.0519
A1(HL)	!A2&!A3	0.0100	n/a	n/a	0.0548
A1(HL)	!A2&A3	0.0100	n/a	n/a	0.0548
A1(HL)	A2&!A3	0.0100	n/a	n/a	0.0546
A2(HL)	!A1&!A3	0.0100	n/a	n/a	0.0673
A2(HL)	!A1&A3	0.0100	n/a	n/a	0.0584
A2(HL)	A1&!A3	0.0100	n/a	n/a	0.0541

LEAKAGE POWER

When Condition	Power (nW)
!A1&!A2&!A3	0.1290
!A1&!A2&A3	0.1290
!A1&A2&!A3	0.1290
!A1&A2&A3	0.1293
A1&!A2&!A3	0.1688
A1&!A2&A3	0.1691
A1&A2&!A3	0.2081
A1&A2&A3	0.1811

gf180mcu_fd_sc_mcu9t5v0__and3_4

gf180mcu_fd_sc_mcu9t5v0__and3_4 symbol

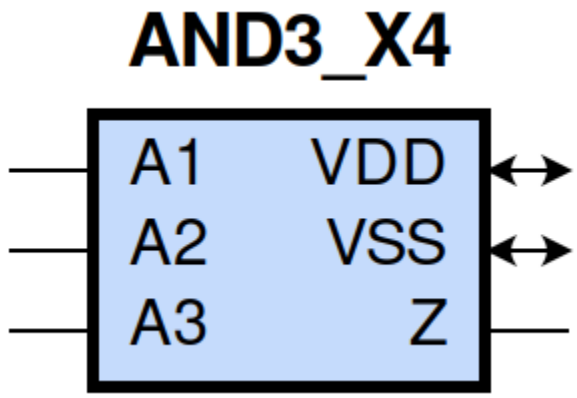

gf180mcu_fd_sc_mcu9t5v0__and3_4 schematic

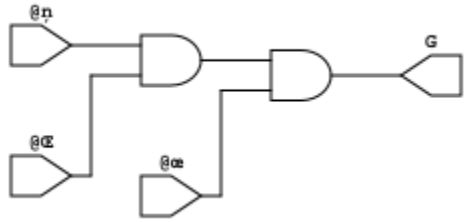

gf180mcu_fd_sc_mcu9t5v0__and3_4 layout

AND3_X4 is a 3-input AND with 4X drive strength

Attributes

Attribute	Value
area	56.448000 μm^2

OUTPUT FUNCTIONS

Output Pin	Function
Z	(A1&A2&A3)

TRUTH TABLE FOR Z

A1	A2	A3	Z
1	1	1	1
0	?	?	0
?	0	?	0
?	?	0	0

FUNCTIONAL SCHEMATIC

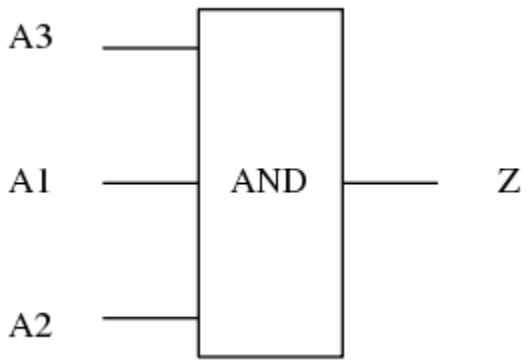

PIN CAPACITANCE (pf)

Pin	Type	Capacitance (pf)
A3	input	0.0135
A1	input	0.0124
A2	input	0.0129

DELAY AND OUTPUT TRANSITION TIME corresponding to min slew and load

Input Pin	Output	When Condition	Tin (ns)	Out Load (pf)	Delay (ns)	Tout (ns)
A3(LH)	Z(LH)	A1&A2	0.0100	0.0010	0.2406	0.0351
A3(HL)	Z(HL)	A1&A2	0.0100	0.0010	0.2161	0.0353
A1(LH)	Z(LH)	A2&A3	0.0100	0.0010	0.2101	0.0351
A1(HL)	Z(HL)	A2&A3	0.0100	0.0010	0.1750	0.0287
A2(HL)	Z(HL)	A1&A3	0.0100	0.0010	0.1985	0.0320
A2(LH)	Z(LH)	A1&A3	0.0100	0.0010	0.2303	0.0353

DYNAMIC ENERGY

Input Pin	When Condition	Tin (ns)	Output	Out Load (pf)	Energy (uW/MHz)
A3	A1&A2	0.0100	Z(LH)	0.0010	0.7068
A2	A1&A3	0.0100	Z(HL)	0.0010	1.1534
A2	A1&A3	0.0100	Z(LH)	0.0010	0.7071
A1	A2&A3	0.0100	Z(LH)	0.0010	0.7073
A3	A1&A2	0.0100	Z(HL)	0.0010	1.3021
A1	A2&A3	0.0100	Z(HL)	0.0010	0.9870
A3(LH)	!A1&!A2	0.0100	n/a	n/a	-0.0946
A3(LH)	!A1&A2	0.0100	n/a	n/a	-0.0945
A3(LH)	A1&!A2	0.0100	n/a	n/a	-0.0946
A2(LH)	!A1&!A3	0.0100	n/a	n/a	-0.0946
A2(LH)	!A1&A3	0.0100	n/a	n/a	-0.0943
A2(LH)	A1&!A3	0.0100	n/a	n/a	-0.0747
A1(LH)	!A2&!A3	0.0100	n/a	n/a	-0.0619
A1(LH)	!A2&A3	0.0100	n/a	n/a	-0.0619
A1(LH)	A2&!A3	0.0100	n/a	n/a	0.0610
A3(HL)	!A1&!A2	0.0100	n/a	n/a	0.0950
A3(HL)	!A1&A2	0.0100	n/a	n/a	0.1062
A3(HL)	A1&!A2	0.0100	n/a	n/a	0.1035
A1(HL)	!A2&!A3	0.0100	n/a	n/a	0.1095
A1(HL)	!A2&A3	0.0100	n/a	n/a	0.1094
A1(HL)	A2&!A3	0.0100	n/a	n/a	0.1091
A2(HL)	!A1&!A3	0.0100	n/a	n/a	0.1348
A2(HL)	!A1&A3	0.0100	n/a	n/a	0.1171
A2(HL)	A1&!A3	0.0100	n/a	n/a	0.1082

LEAKAGE POWER

When Condition	Power (nW)
!A1&!A2&!A3	0.2079
!A1&!A2&A3	0.2079
!A1&A2&!A3	0.2081
!A1&A2&A3	0.2086
A1&!A2&!A3	0.2877
A1&!A2&A3	0.2881
A1&A2&!A3	0.3662
A1&A2&A3	0.3122

gf180mcu_fd_sc_mcu9t5v0__and4_1

gf180mcu_fd_sc_mcu9t5v0__and4_1 symbol

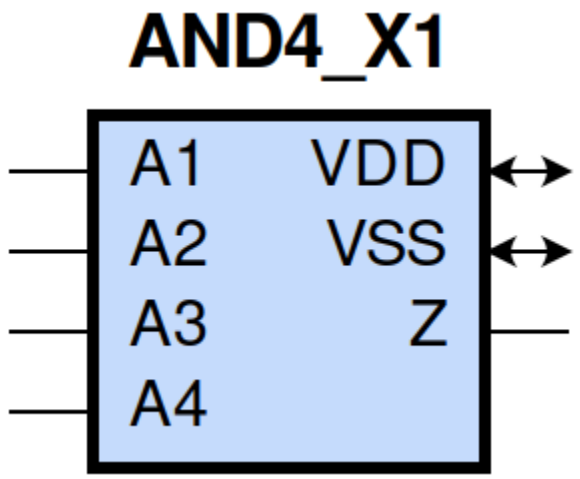

gf180mcu_fd_sc_mcu9t5v0__and4_1 schematic

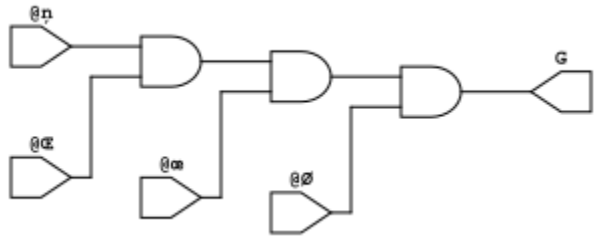

gf180mcu_fd_sc_mcu9t5v0__and4_1 layout

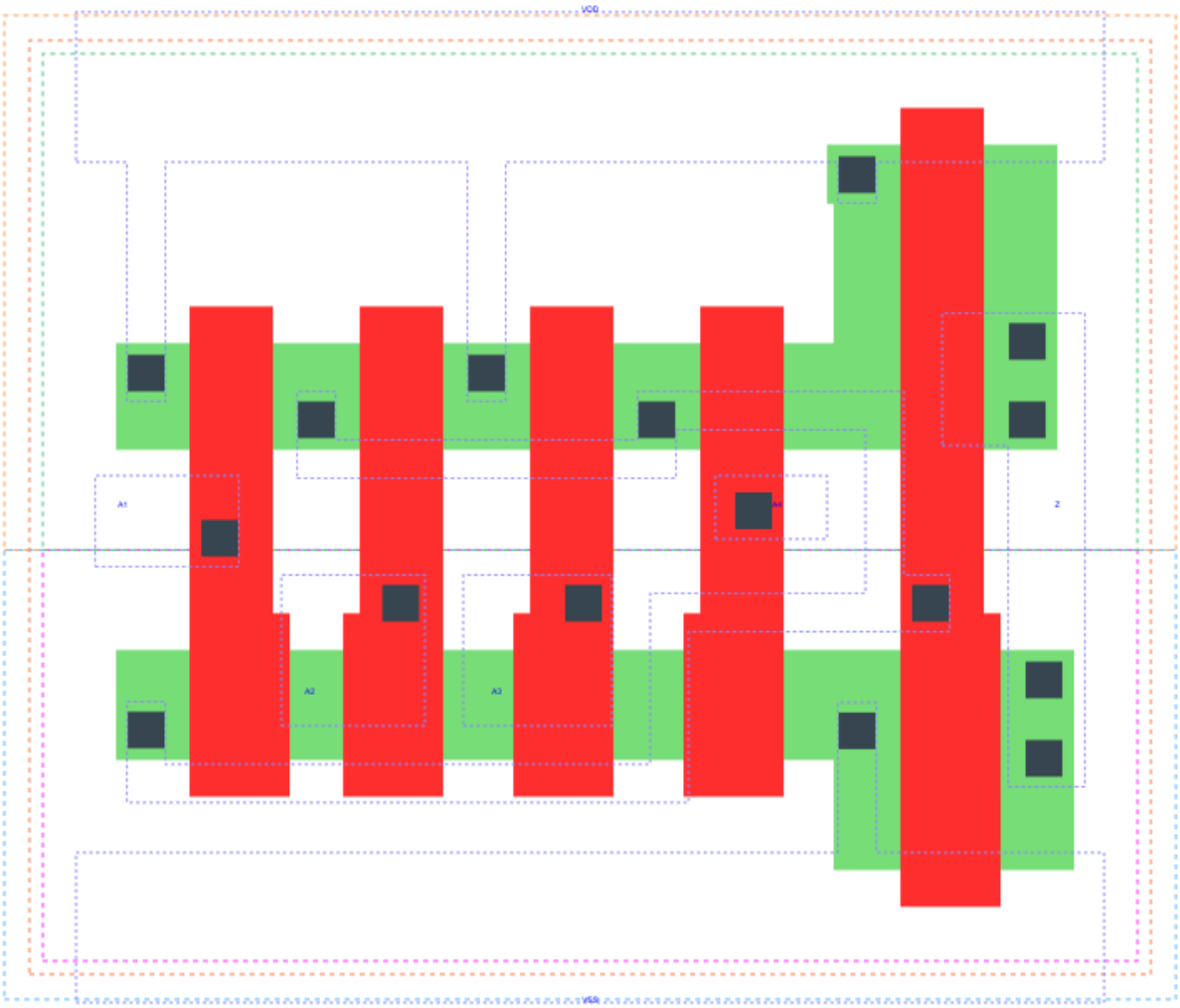

AND4_X1 is a 4-input AND with 1X drive strength

Attributes

Attribute	Value
area	31.046400 μm^2

OUTPUT FUNCTIONS

Output Pin	Function
Z	(A1&A2&A3&A4)

TRUTH TABLE FOR Z

A1	A2	A3	A4	Z
1	1	1	1	1
0	?	?	?	0
?	0	?	?	0
?	?	0	?	0
?	?	?	0	0

FUNCTIONAL SCHEMATIC

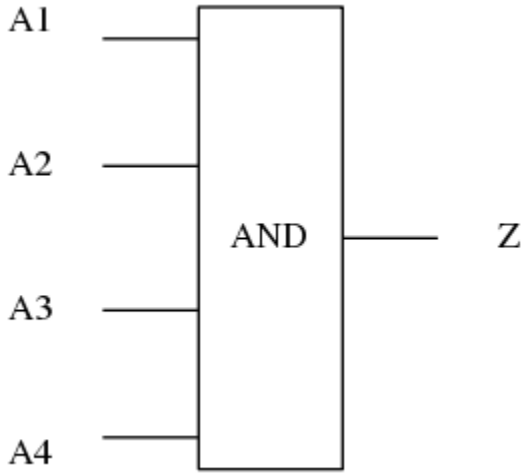

PIN CAPACITANCE (pf)

Pin	Type	Capacitance (pf)
A1	input	0.0033
A2	input	0.0034
A3	input	0.0034
A4	input	0.0032

DELAY AND OUTPUT TRANSITION TIME corresponding to min slew and load

Input Pin	Output	When Condition	Tin (ns)	Out Load (pf)	Delay (ns)	Tout (ns)
A1(LH)	Z(LH)	A2&A3&A4	0.0100	0.0010	0.3114	0.0585
A1(HL)	Z(HL)	A2&A3&A4	0.0100	0.0010	0.2471	0.0456
A2(HL)	Z(HL)	A1&A3&A4	0.0100	0.0010	0.2750	0.0499
A2(LH)	Z(LH)	A1&A3&A4	0.0100	0.0010	0.3406	0.0584
A3(LH)	Z(LH)	A1&A2&A4	0.0100	0.0010	0.3607	0.0585
A3(HL)	Z(HL)	A1&A2&A4	0.0100	0.0010	0.3022	0.0539
A4(LH)	Z(LH)	A1&A2&A3	0.0100	0.0010	0.3717	0.0585
A4(HL)	Z(HL)	A1&A2&A3	0.0100	0.0010	0.3230	0.0577

DYNAMIC ENERGY

Input Pin	When Condition	Tin (ns)	Output	Out Load (pf)	Energy (uW/MHz)
A3	A1&A2&A4	0.0100	Z(LH)	0.0010	0.2395
A2	A1&A3&A4	0.0100	Z(HL)	0.0010	0.3627
A2	A1&A3&A4	0.0100	Z(LH)	0.0010	0.2394
A4	A1&A2&A3	0.0100	Z(LH)	0.0010	0.2393
A1	A2&A3&A4	0.0100	Z(LH)	0.0010	0.2393
A3	A1&A2&A4	0.0100	Z(HL)	0.0010	0.4083
A4	A1&A2&A3	0.0100	Z(HL)	0.0010	0.4512
A1	A2&A3&A4	0.0100	Z(HL)	0.0010	0.3188
A3(LH)	!A1&!A2&!A4	0.0100	n/a	n/a	-0.0206
A3(LH)	!A1&!A2&A4	0.0100	n/a	n/a	-0.0204
A3(LH)	!A1&A2&!A4	0.0100	n/a	n/a	-0.0205
A3(LH)	!A1&A2&A4	0.0100	n/a	n/a	-0.0204
A3(LH)	A1&!A2&!A4	0.0100	n/a	n/a	-0.0206
A3(LH)	A1&!A2&A4	0.0100	n/a	n/a	-0.0205
A3(LH)	A1&A2&!A4	0.0100	n/a	n/a	-0.0136
A2(LH)	!A1&!A3&!A4	0.0100	n/a	n/a	-0.0206
A2(LH)	!A1&!A3&A4	0.0100	n/a	n/a	-0.0205
A2(LH)	!A1&A3&!A4	0.0100	n/a	n/a	-0.0205
A2(LH)	!A1&A3&A4	0.0100	n/a	n/a	-0.0205
A2(LH)	A1&!A3&!A4	0.0100	n/a	n/a	-0.0123
A2(LH)	A1&!A3&A4	0.0100	n/a	n/a	-0.0122
A2(LH)	A1&A3&!A4	0.0100	n/a	n/a	0.0213
A1(LH)	!A2&!A3&!A4	0.0100	n/a	n/a	-0.0119
A1(LH)	!A2&!A3&A4	0.0100	n/a	n/a	-0.0119
A1(LH)	!A2&A3&!A4	0.0100	n/a	n/a	-0.0119
A1(LH)	!A2&A3&A4	0.0100	n/a	n/a	-0.0119
A1(LH)	A2&!A3&!A4	0.0100	n/a	n/a	0.0221
A1(LH)	A2&!A3&A4	0.0100	n/a	n/a	0.0221
A1(LH)	A2&A3&!A4	0.0100	n/a	n/a	0.0556
A3(HL)	!A1&!A2&!A4	0.0100	n/a	n/a	0.0251

continues on next page

Table 160 – continued from previous page

A3(HL)	!A1&!A2&A4	0.0100	n/a	n/a	0.0219
A3(HL)	!A1&A2&!A4	0.0100	n/a	n/a	0.0324
A3(HL)	!A1&A2&A4	0.0100	n/a	n/a	0.0260
A3(HL)	A1&!A2&!A4	0.0100	n/a	n/a	0.0285
A3(HL)	A1&!A2&A4	0.0100	n/a	n/a	0.0247
A3(HL)	A1&A2&!A4	0.0100	n/a	n/a	0.0231
A4(LH)	!A1&!A2&!A3	0.0100	n/a	n/a	-0.0205
A4(LH)	!A1&!A2&A3	0.0100	n/a	n/a	-0.0205
A4(LH)	!A1&A2&!A3	0.0100	n/a	n/a	-0.0205
A4(LH)	!A1&A2&A3	0.0100	n/a	n/a	-0.0204
A4(LH)	A1&!A2&!A3	0.0100	n/a	n/a	-0.0205
A4(LH)	A1&!A2&A3	0.0100	n/a	n/a	-0.0205
A4(LH)	A1&A2&!A3	0.0100	n/a	n/a	-0.0205
A1(HL)	!A2&!A3&!A4	0.0100	n/a	n/a	0.0243
A1(HL)	!A2&!A3&A4	0.0100	n/a	n/a	0.0243
A1(HL)	!A2&A3&!A4	0.0100	n/a	n/a	0.0243
A1(HL)	!A2&A3&A4	0.0100	n/a	n/a	0.0243
A1(HL)	A2&!A3&!A4	0.0100	n/a	n/a	0.0242
A1(HL)	A2&!A3&A4	0.0100	n/a	n/a	0.0242
A1(HL)	A2&A3&!A4	0.0100	n/a	n/a	0.0242
A2(HL)	!A1&!A3&!A4	0.0100	n/a	n/a	0.0316
A2(HL)	!A1&!A3&A4	0.0100	n/a	n/a	0.0306
A2(HL)	!A1&A3&!A4	0.0100	n/a	n/a	0.0312
A2(HL)	!A1&A3&A4	0.0100	n/a	n/a	0.0267
A2(HL)	A1&!A3&!A4	0.0100	n/a	n/a	0.0240
A2(HL)	A1&!A3&A4	0.0100	n/a	n/a	0.0239
A2(HL)	A1&A3&!A4	0.0100	n/a	n/a	0.0240
A4(HL)	!A1&!A2&!A3	0.0100	n/a	n/a	0.0206
A4(HL)	!A1&!A2&A3	0.0100	n/a	n/a	0.0206
A4(HL)	!A1&A2&!A3	0.0100	n/a	n/a	0.0206
A4(HL)	!A1&A2&A3	0.0100	n/a	n/a	0.0210
A4(HL)	A1&!A2&!A3	0.0100	n/a	n/a	0.0205
A4(HL)	A1&!A2&A3	0.0100	n/a	n/a	0.0221
A4(HL)	A1&A2&!A3	0.0100	n/a	n/a	0.0220

LEAKAGE POWER

When Condition	Power (nW)
!A1&!A2&!A3&!A4	0.1021
!A1&!A2&!A3&A4	0.1021
!A1&!A2&A3&!A4	0.1021
!A1&!A2&A3&A4	0.1021
!A1&A2&!A3&!A4	0.1021
!A1&A2&!A3&A4	0.1021
!A1&A2&A3&!A4	0.1022
!A1&A2&A3&A4	0.1023
A1&!A2&!A3&!A4	0.1422
A1&!A2&!A3&A4	0.1422
A1&!A2&A3&!A4	0.1422
A1&!A2&A3&A4	0.1423
A1&A2&!A3&!A4	0.1814
A1&A2&!A3&A4	0.1816
A1&A2&A3&!A4	0.2204
A1&A2&A3&A4	0.1801

gf180mcu_fd_sc_mcu9t5v0__and4_2

gf180mcu_fd_sc_mcu9t5v0__and4_2 symbol

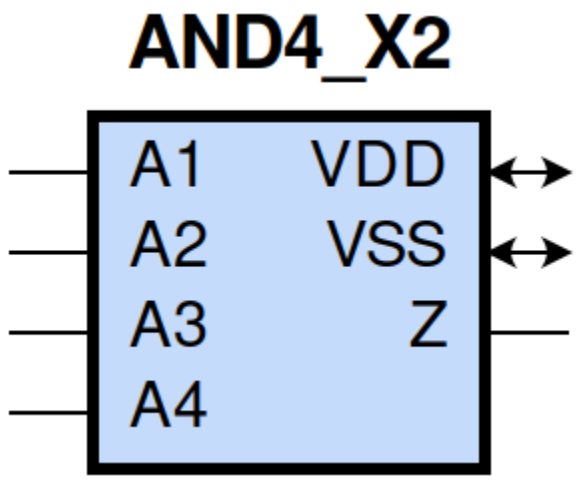

gf180mcu_fd_sc_mcu9t5v0__and4_2 schematic

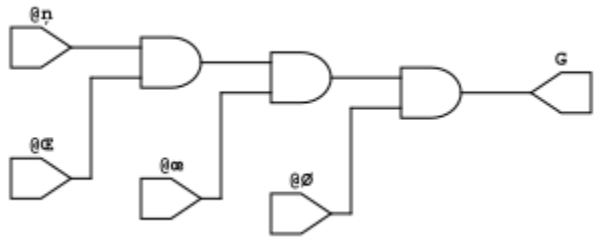

gf180mcu_fd_sc_mcu9t5v0__and4_2 layout

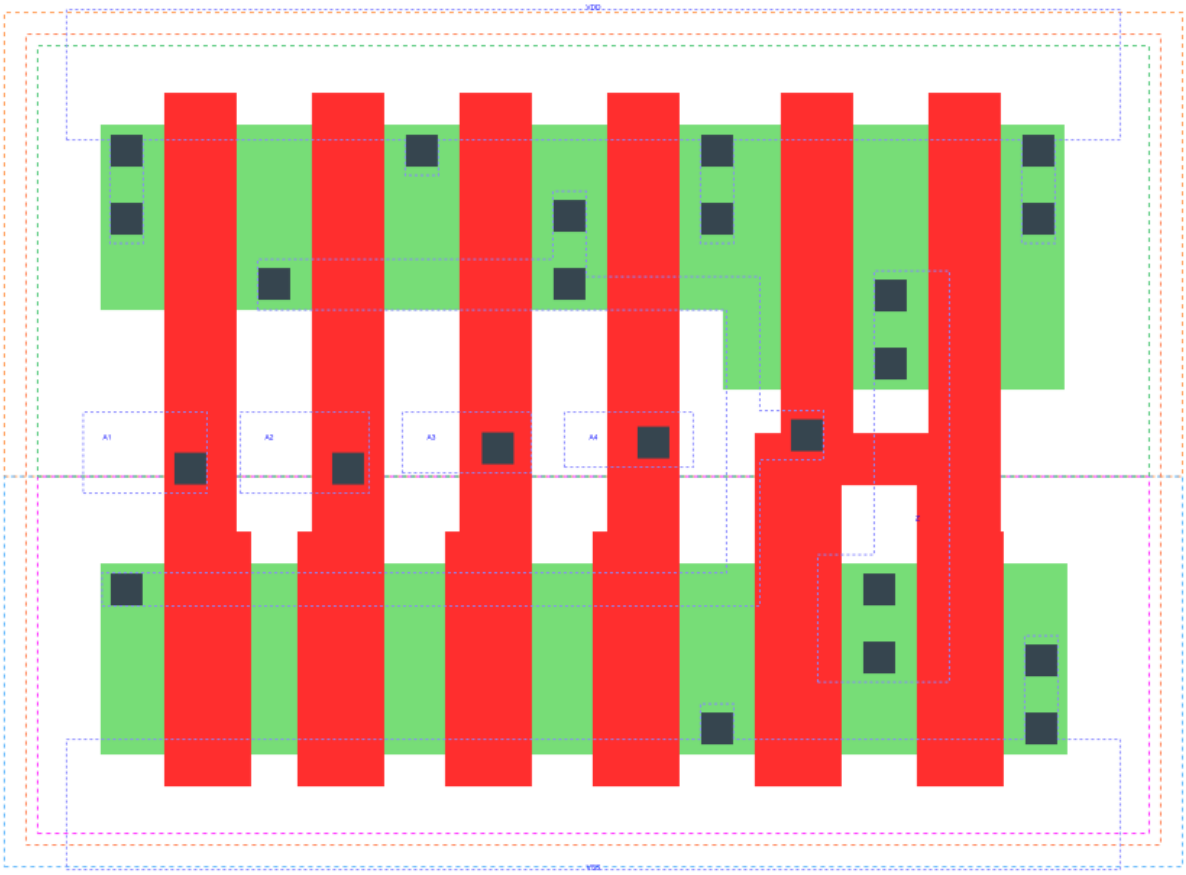

AND4_X2 is a 4-input AND with 2X drive strength

Attributes

Attribute	Value
area	36.691200 μm^2

OUTPUT FUNCTIONS

Output Pin	Function
Z	(A1&A2&A3&A4)

TRUTH TABLE FOR Z

A1	A2	A3	A4	Z
1	1	1	1	1
0	?	?	?	0
?	0	?	?	0
?	?	0	?	0
?	?	?	0	0

FUNCTIONAL SCHEMATIC

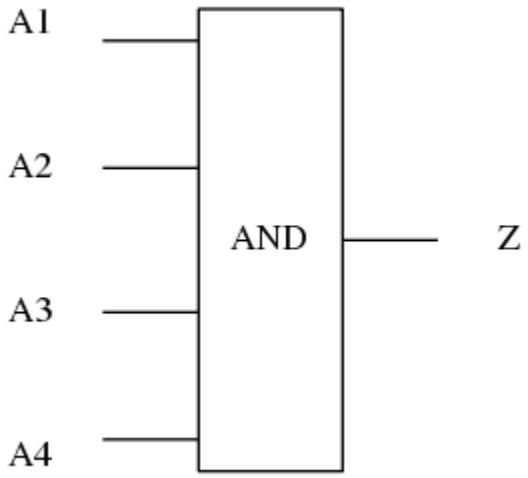

PIN CAPACITANCE (pf)

Pin	Type	Capacitance (pf)
A1	input	0.0061
A2	input	0.0059
A3	input	0.0058
A4	input	0.0059

DELAY AND OUTPUT TRANSITION TIME corresponding to min slew and load

Input Pin	Output	When Condition	Tin (ns)	Out Load (pf)	Delay (ns)	Tout (ns)
A1(LH)	Z(LH)	A2&A3&A4	0.0100	0.0010	0.2637	0.0443
A1(HL)	Z(HL)	A2&A3&A4	0.0100	0.0010	0.2066	0.0341
A2(HL)	Z(HL)	A1&A3&A4	0.0100	0.0010	0.2337	0.0377
A2(LH)	Z(LH)	A1&A3&A4	0.0100	0.0010	0.2926	0.0444
A3(LH)	Z(LH)	A1&A2&A4	0.0100	0.0010	0.3123	0.0441
A3(HL)	Z(HL)	A1&A2&A4	0.0100	0.0010	0.2592	0.0414
A4(LH)	Z(LH)	A1&A2&A3	0.0100	0.0010	0.3234	0.0443
A4(HL)	Z(HL)	A1&A2&A3	0.0100	0.0010	0.2782	0.0449

DYNAMIC ENERGY

Input Pin	When Condition	Tin (ns)	Output	Out Load (pf)	Energy (uW/MHz)
A3	A1&A2&A4	0.0100	Z(LH)	0.0010	0.4221
A2	A1&A3&A4	0.0100	Z(HL)	0.0010	0.6250
A2	A1&A3&A4	0.0100	Z(LH)	0.0010	0.4219
A4	A1&A2&A3	0.0100	Z(LH)	0.0010	0.4223
A1	A2&A3&A4	0.0100	Z(LH)	0.0010	0.4217
A3	A1&A2&A4	0.0100	Z(HL)	0.0010	0.7130
A4	A1&A2&A3	0.0100	Z(HL)	0.0010	0.7961
A1	A2&A3&A4	0.0100	Z(HL)	0.0010	0.5385
A3(LH)	!A1&!A2&!A4	0.0100	n/a	n/a	-0.0415
A3(LH)	!A1&!A2&A4	0.0100	n/a	n/a	-0.0412
A3(LH)	!A1&A2&!A4	0.0100	n/a	n/a	-0.0413
A3(LH)	!A1&A2&A4	0.0100	n/a	n/a	-0.0412
A3(LH)	A1&!A2&!A4	0.0100	n/a	n/a	-0.0415
A3(LH)	A1&!A2&A4	0.0100	n/a	n/a	-0.0413
A3(LH)	A1&A2&!A4	0.0100	n/a	n/a	-0.0299
A2(LH)	!A1&!A3&!A4	0.0100	n/a	n/a	-0.0414
A2(LH)	!A1&!A3&A4	0.0100	n/a	n/a	-0.0414
A2(LH)	!A1&A3&!A4	0.0100	n/a	n/a	-0.0413
A2(LH)	!A1&A3&A4	0.0100	n/a	n/a	-0.0413
A2(LH)	A1&!A3&!A4	0.0100	n/a	n/a	-0.0276
A2(LH)	A1&!A3&A4	0.0100	n/a	n/a	-0.0276
A2(LH)	A1&A3&!A4	0.0100	n/a	n/a	0.0371
A1(LH)	!A2&!A3&!A4	0.0100	n/a	n/a	-0.0261
A1(LH)	!A2&!A3&A4	0.0100	n/a	n/a	-0.0261
A1(LH)	!A2&A3&!A4	0.0100	n/a	n/a	-0.0261
A1(LH)	!A2&A3&A4	0.0100	n/a	n/a	-0.0261
A1(LH)	A2&!A3&!A4	0.0100	n/a	n/a	0.0392
A1(LH)	A2&!A3&A4	0.0100	n/a	n/a	0.0393
A1(LH)	A2&A3&!A4	0.0100	n/a	n/a	0.1038
A3(HL)	!A1&!A2&!A4	0.0100	n/a	n/a	0.0505
A3(HL)	!A1&!A2&A4	0.0100	n/a	n/a	0.0441
A3(HL)	!A1&A2&!A4	0.0100	n/a	n/a	0.0650
A3(HL)	!A1&A2&A4	0.0100	n/a	n/a	0.0523
A3(HL)	A1&!A2&!A4	0.0100	n/a	n/a	0.0571

continues on next page

Table 161 – continued from previous page

A3(HL)	A1&!A2&A4	0.0100	n/a	n/a	0.0497
A3(HL)	A1&A2&!A4	0.0100	n/a	n/a	0.0465
A4(LH)	!A1&!A2&!A3	0.0100	n/a	n/a	-0.0413
A4(LH)	!A1&!A2&A3	0.0100	n/a	n/a	-0.0413
A4(LH)	!A1&A2&!A3	0.0100	n/a	n/a	-0.0413
A4(LH)	!A1&A2&A3	0.0100	n/a	n/a	-0.0413
A4(LH)	A1&!A2&!A3	0.0100	n/a	n/a	-0.0413
A4(LH)	A1&!A2&A3	0.0100	n/a	n/a	-0.0413
A4(LH)	A1&A2&!A3	0.0100	n/a	n/a	-0.0414
A1(HL)	!A2&!A3&!A4	0.0100	n/a	n/a	0.0489
A1(HL)	!A2&!A3&A4	0.0100	n/a	n/a	0.0488
A1(HL)	!A2&A3&!A4	0.0100	n/a	n/a	0.0488
A1(HL)	!A2&A3&A4	0.0100	n/a	n/a	0.0488
A1(HL)	A2&!A3&!A4	0.0100	n/a	n/a	0.0487
A1(HL)	A2&!A3&A4	0.0100	n/a	n/a	0.0486
A1(HL)	A2&A3&!A4	0.0100	n/a	n/a	0.0486
A2(HL)	!A1&!A3&!A4	0.0100	n/a	n/a	0.0633
A2(HL)	!A1&!A3&A4	0.0100	n/a	n/a	0.0613
A2(HL)	!A1&A3&!A4	0.0100	n/a	n/a	0.0627
A2(HL)	!A1&A3&A4	0.0100	n/a	n/a	0.0535
A2(HL)	A1&!A3&!A4	0.0100	n/a	n/a	0.0483
A2(HL)	A1&!A3&A4	0.0100	n/a	n/a	0.0482
A2(HL)	A1&A3&!A4	0.0100	n/a	n/a	0.0483
A4(HL)	!A1&!A2&!A3	0.0100	n/a	n/a	0.0416
A4(HL)	!A1&!A2&A3	0.0100	n/a	n/a	0.0416
A4(HL)	!A1&A2&!A3	0.0100	n/a	n/a	0.0416
A4(HL)	!A1&A2&A3	0.0100	n/a	n/a	0.0424
A4(HL)	A1&!A2&!A3	0.0100	n/a	n/a	0.0415
A4(HL)	A1&!A2&A3	0.0100	n/a	n/a	0.0446
A4(HL)	A1&A2&!A3	0.0100	n/a	n/a	0.0443

LEAKAGE POWER

When Condition	Power (nW)
!A1&!A2&!A3&!A4	0.1290
!A1&!A2&!A3&A4	0.1290
!A1&!A2&A3&!A4	0.1290
!A1&!A2&A3&A4	0.1290
!A1&A2&!A3&!A4	0.1290
!A1&A2&!A3&A4	0.1290
!A1&A2&A3&!A4	0.1291
!A1&A2&A3&A4	0.1293
A1&!A2&!A3&!A4	0.1688
A1&!A2&!A3&A4	0.1688
A1&!A2&A3&!A4	0.1689
A1&!A2&A3&A4	0.1691
A1&A2&!A3&!A4	0.2079
A1&A2&!A3&A4	0.2081
A1&A2&A3&!A4	0.2468
A1&A2&A3&A4	0.2073

gf180mcu_fd_sc_mcu9t5v0__and4_4

gf180mcu_fd_sc_mcu9t5v0__and4_4 symbol

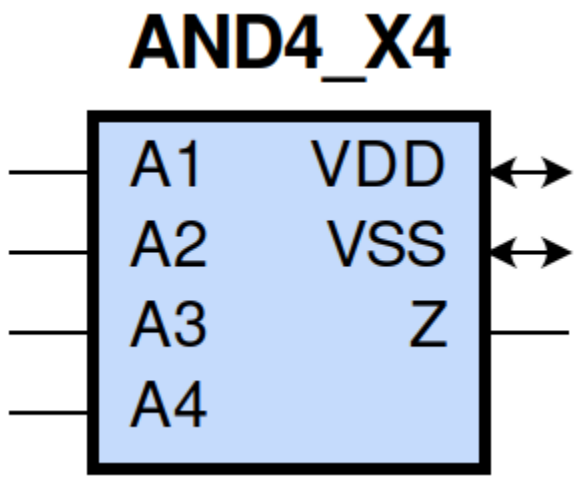

gf180mcu_fd_sc_mcu9t5v0__and4_4 schematic

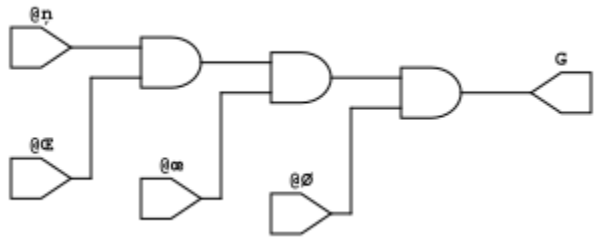

gf180mcu_fd_sc_mcu9t5v0__and4_4 layout

AND4_X4 is a 4-input AND with 4X drive strength

Attributes

Attribute	Value
area	67.737600 μm^2

OUTPUT FUNCTIONS

Output Pin	Function
Z	(A1&A2&A3&A4)

TRUTH TABLE FOR Z

A1	A2	A3	A4	Z
1	1	1	1	1
0	?	?	?	0
?	0	?	?	0
?	?	0	?	0
?	?	?	0	0

FUNCTIONAL SCHEMATIC

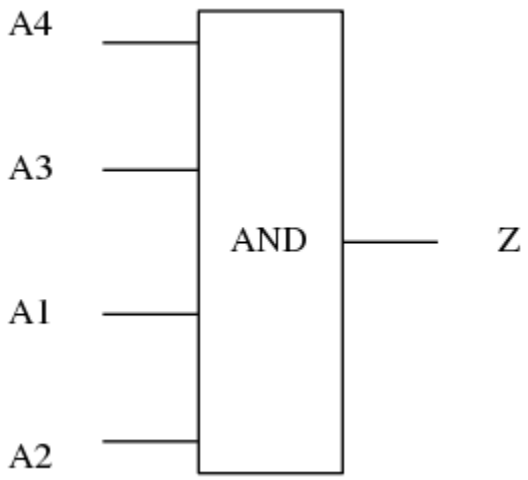

PIN CAPACITANCE (pf)

Pin	Type	Capacitance (pf)
A4	input	0.0131
A3	input	0.0126
A1	input	0.0117
A2	input	0.0121

DELAY AND OUTPUT TRANSITION TIME corresponding to min slew and load

Input Pin	Output	When Condition	Tin (ns)	Out Load (pf)	Delay (ns)	Tout (ns)
A4(LH)	Z(LH)	A1&A2&A3	0.0100	0.0010	0.3144	0.0423
A4(HL)	Z(HL)	A1&A2&A3	0.0100	0.0010	0.2709	0.0430
A3(LH)	Z(LH)	A1&A2&A4	0.0100	0.0010	0.3034	0.0424
A3(HL)	Z(HL)	A1&A2&A4	0.0100	0.0010	0.2525	0.0394
A1(LH)	Z(LH)	A2&A3&A4	0.0100	0.0010	0.2546	0.0419
A1(HL)	Z(HL)	A2&A3&A4	0.0100	0.0010	0.1998	0.0323
A2(HL)	Z(HL)	A1&A3&A4	0.0100	0.0010	0.2270	0.0359
A2(LH)	Z(LH)	A1&A3&A4	0.0100	0.0010	0.2837	0.0424

DYNAMIC ENERGY

Input Pin	When Condition	Tin (ns)	Output	Out Load (pf)	Energy (uW/MHz)
A3	A1&A2&A4	0.0100	Z(LH)	0.0010	0.8384
A2	A1&A3&A4	0.0100	Z(HL)	0.0010	1.2203
A2	A1&A3&A4	0.0100	Z(LH)	0.0010	0.8385
A4	A1&A2&A3	0.0100	Z(LH)	0.0010	0.8388
A1	A2&A3&A4	0.0100	Z(LH)	0.0010	0.8386
A3	A1&A2&A4	0.0100	Z(HL)	0.0010	1.3965
A4	A1&A2&A3	0.0100	Z(HL)	0.0010	1.5600
A1	A2&A3&A4	0.0100	Z(HL)	0.0010	1.0441
A3(LH)	!A1&!A2&!A4	0.0100	n/a	n/a	-0.0828
A3(LH)	!A1&!A2&A4	0.0100	n/a	n/a	-0.0824
A3(LH)	!A1&A2&!A4	0.0100	n/a	n/a	-0.0826
A3(LH)	!A1&A2&A4	0.0100	n/a	n/a	-0.0824
A3(LH)	A1&!A2&!A4	0.0100	n/a	n/a	-0.0828
A3(LH)	A1&!A2&A4	0.0100	n/a	n/a	-0.0825
A3(LH)	A1&A2&!A4	0.0100	n/a	n/a	-0.0617
A2(LH)	!A1&!A3&!A4	0.0100	n/a	n/a	-0.0828
A2(LH)	!A1&!A3&A4	0.0100	n/a	n/a	-0.0828
A2(LH)	!A1&A3&!A4	0.0100	n/a	n/a	-0.0826
A2(LH)	!A1&A3&A4	0.0100	n/a	n/a	-0.0825
A2(LH)	A1&!A3&!A4	0.0100	n/a	n/a	-0.0550
A2(LH)	A1&!A3&A4	0.0100	n/a	n/a	-0.0551
A2(LH)	A1&A3&!A4	0.0100	n/a	n/a	0.0724
A1(LH)	!A2&!A3&!A4	0.0100	n/a	n/a	-0.0502
A1(LH)	!A2&!A3&A4	0.0100	n/a	n/a	-0.0502
A1(LH)	!A2&A3&!A4	0.0100	n/a	n/a	-0.0502
A1(LH)	!A2&A3&A4	0.0100	n/a	n/a	-0.0502
A1(LH)	A2&!A3&!A4	0.0100	n/a	n/a	0.0805
A1(LH)	A2&!A3&A4	0.0100	n/a	n/a	0.0804
A1(LH)	A2&A3&!A4	0.0100	n/a	n/a	0.2077
A3(HL)	!A1&!A2&!A4	0.0100	n/a	n/a	0.1006
A3(HL)	!A1&!A2&A4	0.0100	n/a	n/a	0.0879
A3(HL)	!A1&A2&!A4	0.0100	n/a	n/a	0.1301
A3(HL)	!A1&A2&A4	0.0100	n/a	n/a	0.1046
A3(HL)	A1&!A2&!A4	0.0100	n/a	n/a	0.1139
A3(HL)	A1&!A2&A4	0.0100	n/a	n/a	0.0993
A3(HL)	A1&A2&!A4	0.0100	n/a	n/a	0.0927
A4(LH)	!A1&!A2&!A3	0.0100	n/a	n/a	-0.0826
A4(LH)	!A1&!A2&A3	0.0100	n/a	n/a	-0.0825
A4(LH)	!A1&A2&!A3	0.0100	n/a	n/a	-0.0827
A4(LH)	!A1&A2&A3	0.0100	n/a	n/a	-0.0824
A4(LH)	A1&!A2&!A3	0.0100	n/a	n/a	-0.0826
A4(LH)	A1&!A2&A3	0.0100	n/a	n/a	-0.0825
A4(LH)	A1&A2&!A3	0.0100	n/a	n/a	-0.0827
A1(HL)	!A2&!A3&!A4	0.0100	n/a	n/a	0.0976
A1(HL)	!A2&!A3&A4	0.0100	n/a	n/a	0.0975
A1(HL)	!A2&A3&!A4	0.0100	n/a	n/a	0.0975
A1(HL)	!A2&A3&A4	0.0100	n/a	n/a	0.0975
A1(HL)	A2&!A3&!A4	0.0100	n/a	n/a	0.0972
A1(HL)	A2&!A3&A4	0.0100	n/a	n/a	0.0972
A1(HL)	A2&A3&!A4	0.0100	n/a	n/a	0.0972
A2(HL)	!A1&!A3&!A4	0.0100	n/a	n/a	0.1267

continues on next page

Table 162 – continued from previous page

A2(HL)	!A1&!A3&A4	0.0100	n/a	n/a	0.1228
A2(HL)	!A1&A3&!A4	0.0100	n/a	n/a	0.1254
A2(HL)	!A1&A3&A4	0.0100	n/a	n/a	0.1071
A2(HL)	A1&!A3&!A4	0.0100	n/a	n/a	0.0962
A2(HL)	A1&!A3&A4	0.0100	n/a	n/a	0.0962
A2(HL)	A1&A3&!A4	0.0100	n/a	n/a	0.0963
A4(HL)	!A1&!A2&!A3	0.0100	n/a	n/a	0.0829
A4(HL)	!A1&!A2&A3	0.0100	n/a	n/a	0.0829
A4(HL)	!A1&A2&!A3	0.0100	n/a	n/a	0.0829
A4(HL)	!A1&A2&A3	0.0100	n/a	n/a	0.0845
A4(HL)	A1&!A2&!A3	0.0100	n/a	n/a	0.0829
A4(HL)	A1&!A2&A3	0.0100	n/a	n/a	0.0890
A4(HL)	A1&A2&!A3	0.0100	n/a	n/a	0.0884

LEAKAGE POWER

When Condition	Power (nW)
!A1&!A2&!A3&!A4	0.2079
!A1&!A2&!A3&A4	0.2079
!A1&!A2&A3&!A4	0.2079
!A1&!A2&A3&A4	0.2079
!A1&A2&!A3&!A4	0.2081
!A1&A2&!A3&A4	0.2081
!A1&A2&A3&!A4	0.2082
!A1&A2&A3&A4	0.2086
A1&!A2&!A3&!A4	0.2877
A1&!A2&!A3&A4	0.2877
A1&!A2&A3&!A4	0.2878
A1&!A2&A3&A4	0.2881
A1&A2&!A3&!A4	0.3658
A1&A2&!A3&A4	0.3662
A1&A2&A3&!A4	0.4435
A1&A2&A3&A4	0.3646

gf180mcu_fd_sc_mcu9t5v0__antenna

gf180mcu_fd_sc_mcu9t5v0__antenna symbol

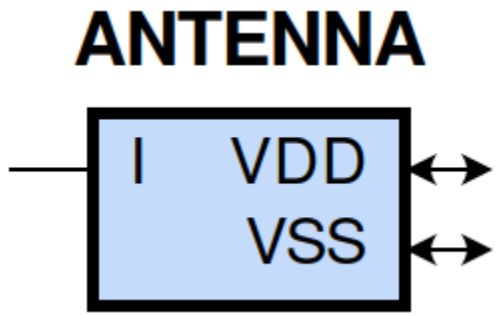

gf180mcu_fd_sc_mcu9t5v0__antenna schematic

gf180mcu_fd_sc_mcu9t5v0__antenna layout

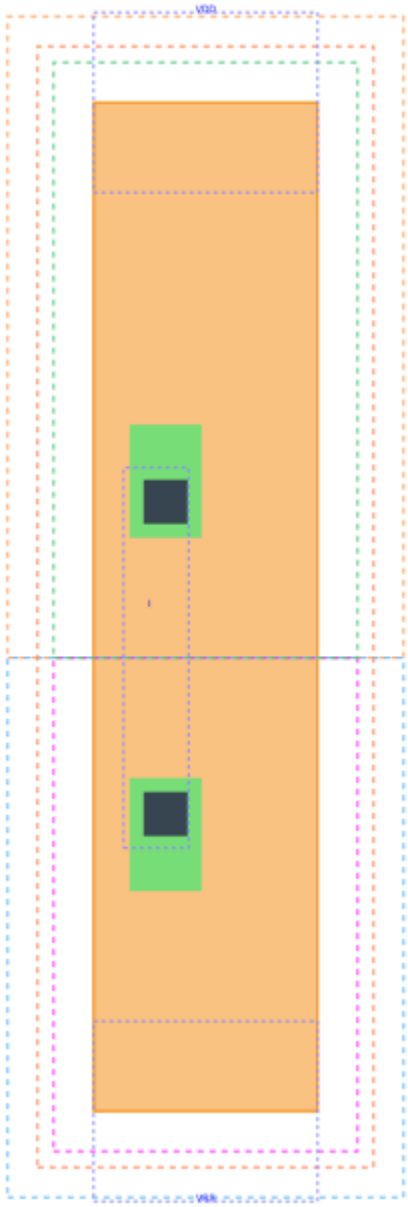

ANTENNA is an antenna cell

Attributes

Attribute	Value
area	5.644800 μm^2

FUNCTIONAL SCHEMATIC

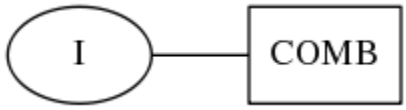

PIN CAPACITANCE (pf)

Pin	Type	Capacitance (pf)
I	input	0.0011

DYNAMIC ENERGY

Input Pin	When Condition	Tin (ns)	Energy (uW/MHz)
I(LH)	default	0.0100	-0.0092
I(HL)	default	0.0100	0.0092

LEAKAGE POWER

When Condition	Power (nW)
!I	0.0500
!I	0.0750
I	0.0750
I	0.0500

gf180mcu_fd_sc_mcu9t5v0__aoi21_1

gf180mcu_fd_sc_mcu9t5v0__aoi21_1 symbol

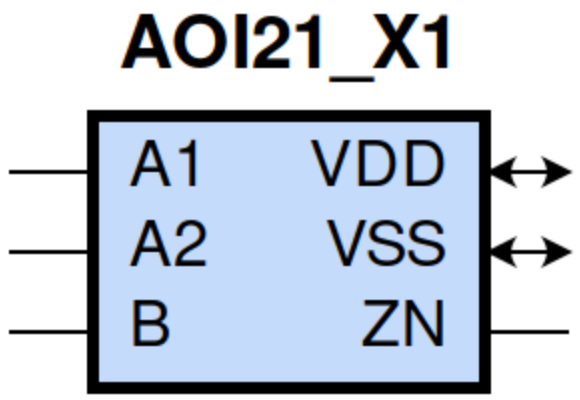

gf180mcu_fd_sc_mcu9t5v0__aoi21_1 schematic

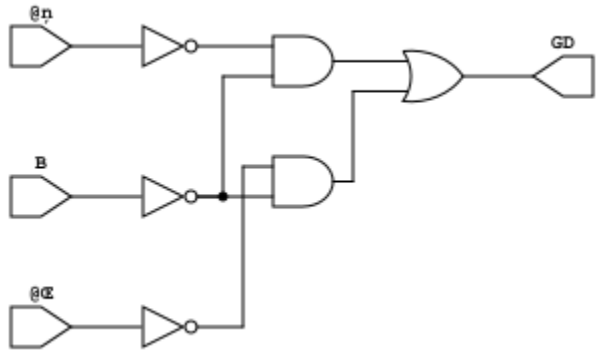

gf180mcu_fd_sc_mcu9t5v0__aoi21_1 layout

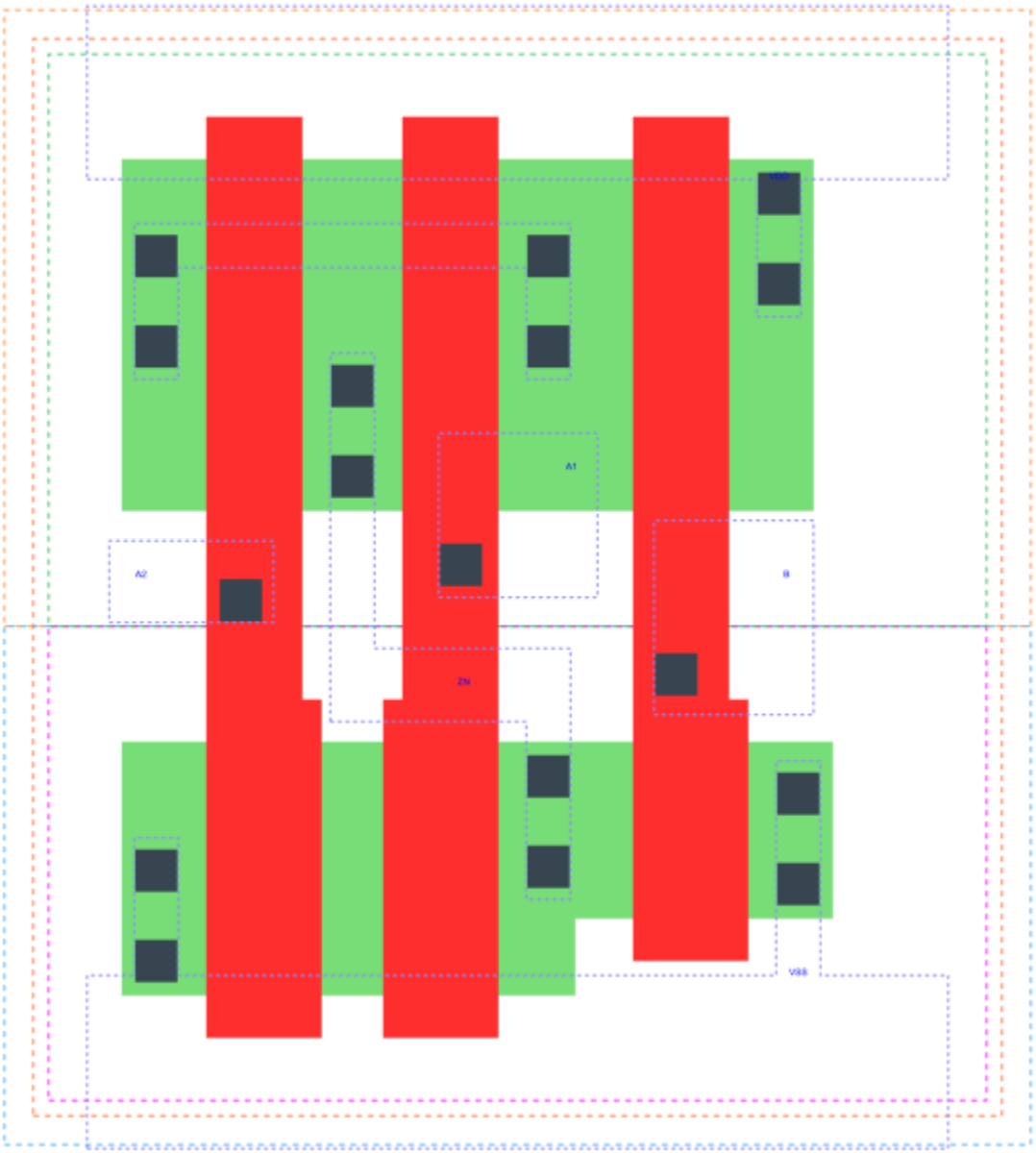

AOI21_X1 is a 2-input AND into 2-input NOR with 1X drive strength

Attributes

Attribute	Value
area	22.579200 μm^2

OUTPUT FUNCTIONS

Output Pin	Function
ZN	(((!A1)&(!B))|((!A2)&(!B)))

TRUTH TABLE FOR ZN

A1	A2	B	ZN
0	?	0	1
?	0	0	1
1	1	?	0
?	?	1	0

FUNCTIONAL SCHEMATIC

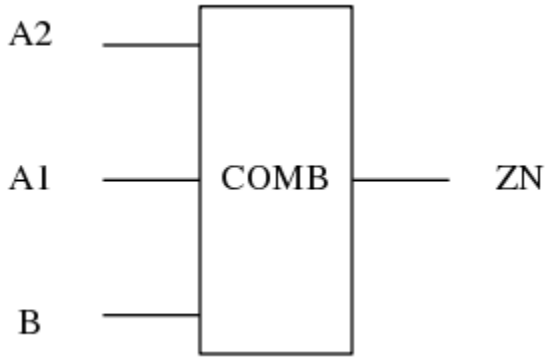

PIN CAPACITANCE (pf)

Pin	Type	Capacitance (pf)
A2	input	0.0069
A1	input	0.0072
B	input	0.0059

DELAY AND OUTPUT TRANSITION TIME corresponding to min slew and load

Input Pin	Output	When Condition	Tin (ns)	Out Load (pf)	Delay (ns)	Tout (ns)
A2(HL)	ZN(LH)	A1&!B	0.0100	0.0010	0.1224	0.0996
A2(LH)	ZN(HL)	A1&!B	0.0100	0.0010	0.0656	0.0298
A1(HL)	ZN(LH)	A2&!B	0.0100	0.0010	0.0890	0.0687
A1(LH)	ZN(HL)	A2&!B	0.0100	0.0010	0.0543	0.0298
B(LH)	ZN(HL)	!A1&!A2	0.0100	0.0010	0.0932	0.0539
B(LH)	ZN(HL)	!A1&A2	0.0100	0.0010	0.0740	0.0458
B(LH)	ZN(HL)	A1&!A2	0.0100	0.0010	0.0818	0.0641
B(HL)	ZN(LH)	!A1&!A2	0.0100	0.0010	0.1073	0.0695
B(HL)	ZN(LH)	!A1&A2	0.0100	0.0010	0.1256	0.0718
B(HL)	ZN(LH)	A1&!A2	0.0100	0.0010	0.1656	0.1007

DYNAMIC ENERGY

Input Pin	When Condition	Tin (ns)	Output	Out Load (pf)	Energy (uW/MHz)
A1	A2&!B	0.0100	ZN(LH)	0.0010	0.1666
B	!A1&!A2	0.0100	ZN(HL)	0.0010	0.0739
B	!A1&A2	0.0100	ZN(HL)	0.0010	0.0641
B	A1&!A2	0.0100	ZN(HL)	0.0010	0.0640
A2	A1&!B	0.0100	ZN(LH)	0.0010	0.2257
A1	A2&!B	0.0100	ZN(HL)	0.0010	0.0034
B	!A1&!A2	0.0100	ZN(LH)	0.0010	0.2570
B	!A1&A2	0.0100	ZN(LH)	0.0010	0.2237
B	A1&!A2	0.0100	ZN(LH)	0.0010	0.2897
A2	A1&!B	0.0100	ZN(HL)	0.0010	0.0033
B(HL)	A1&A2	0.0100	n/a	n/a	0.0597
A2(LH)	!A1&!B	0.0100	n/a	n/a	-0.0601
A2(LH)	!A1&B	0.0100	n/a	n/a	-0.0144
A2(LH)	A1&B	0.0100	n/a	n/a	-0.0161
A1(LH)	!A2&!B	0.0100	n/a	n/a	-0.0450
A1(LH)	!A2&B	0.0100	n/a	n/a	-0.0144
A1(LH)	A2&B	0.0100	n/a	n/a	-0.0161
A2(HL)	!A1&!B	0.0100	n/a	n/a	0.0665
A2(HL)	!A1&B	0.0100	n/a	n/a	0.0159
A2(HL)	A1&B	0.0100	n/a	n/a	0.0648
B(LH)	A1&A2	0.0100	n/a	n/a	-0.0465
A1(HL)	!A2&!B	0.0100	n/a	n/a	0.0673
A1(HL)	!A2&B	0.0100	n/a	n/a	0.0159
A1(HL)	A2&B	0.0100	n/a	n/a	0.0648

LEAKAGE POWER

When Condition	Power (nW)
!A1&!A2&!B	0.1007
!A1&A2&!B	0.1011
A1&!A2&!B	0.1408
!A1&!A2&B	0.1554
!A1&A2&B	0.1583
A1&!A2&B	0.1583
A1&A2&!B	0.1037
A1&A2&B	0.1037

gf180mcu_fd_sc_mcu9t5v0__aoi21_2

gf180mcu_fd_sc_mcu9t5v0__aoi21_2 symbol

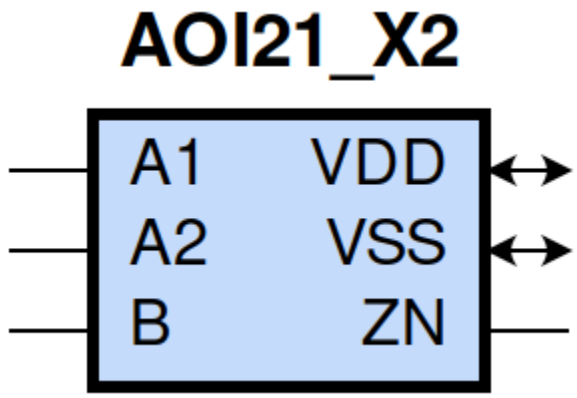

gf180mcu_fd_sc_mcu9t5v0__aoi21_2 schematic

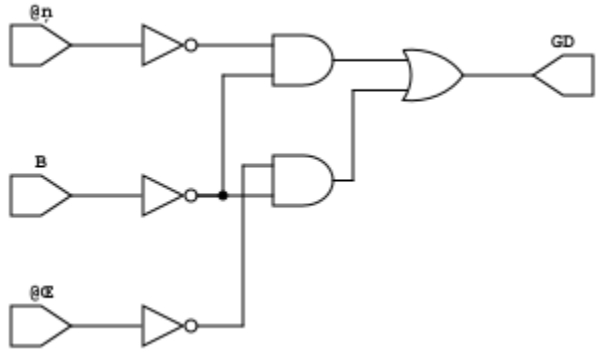

gf180mcu_fd_sc_mcu9t5v0__aoi21_2 layout

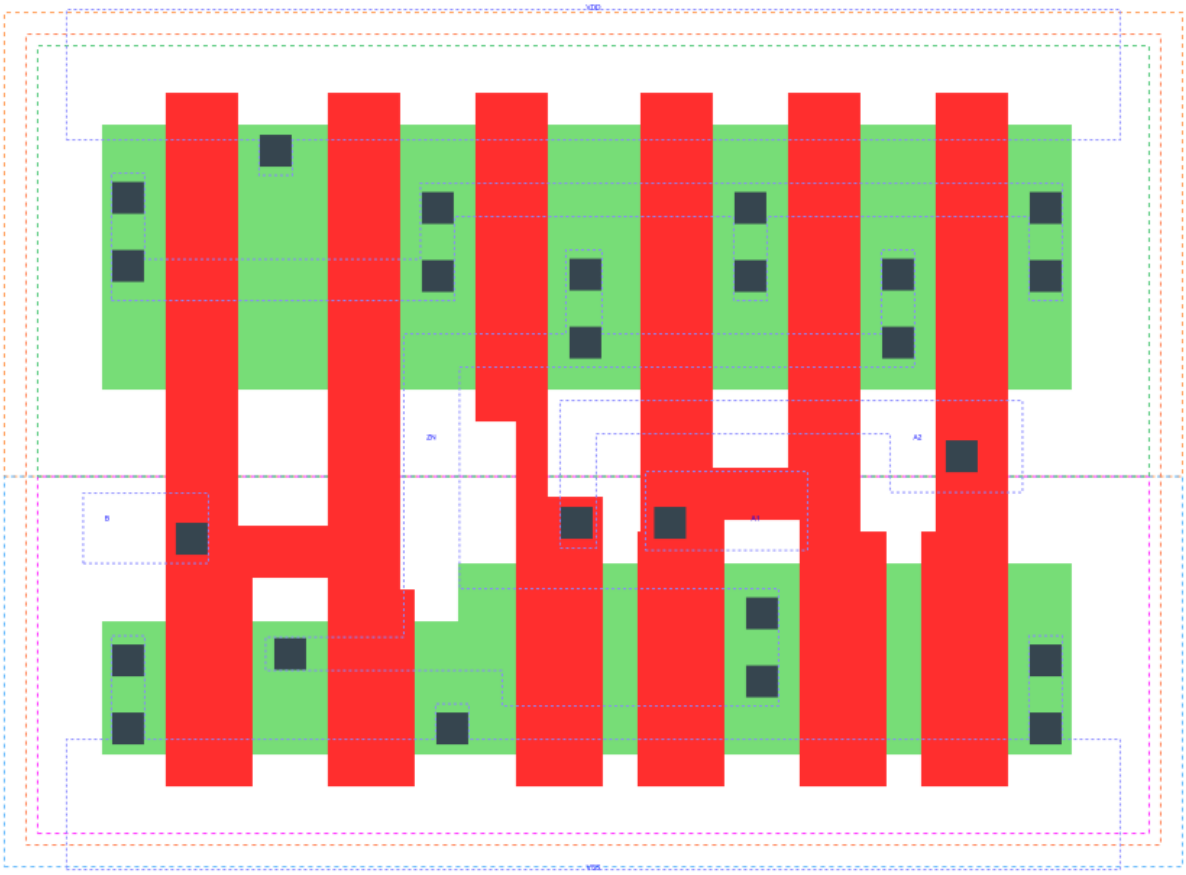

AOI21_X2 is a 2-input AND into 2-input NOR with 2X drive strength

Attributes

Attribute	Value
area	36.691200 μm^2

OUTPUT FUNCTIONS

Output Pin	Function
ZN	(((!A1)&(!B))|((!A2)&(!B)))

TRUTH TABLE FOR ZN

A1	A2	B	ZN
0	?	0	1
?	0	0	1
1	1	?	0
?	?	1	0

FUNCTIONAL SCHEMATIC

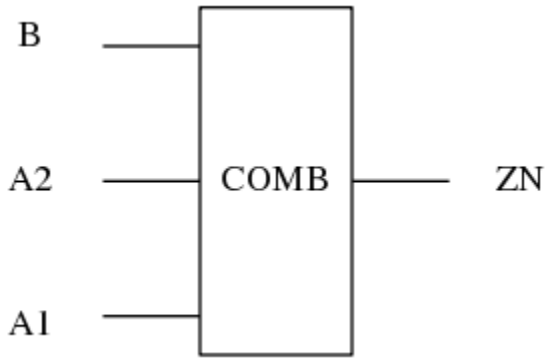

PIN CAPACITANCE (pf)

Pin	Type	Capacitance (pf)
B	input	0.0116
A2	input	0.0143
A1	input	0.0139

DELAY AND OUTPUT TRANSITION TIME corresponding to min slew and load

Input Pin	Output	When Condition	Tin (ns)	Out Load (pf)	Delay (ns)	Tout (ns)
B(LH)	ZN(HL)	!A1&!A2	0.0100	0.0010	0.0909	0.0519
B(LH)	ZN(HL)	!A1&A2	0.0100	0.0010	0.0717	0.0437
B(LH)	ZN(HL)	A1&!A2	0.0100	0.0010	0.0795	0.0616
B(HL)	ZN(LH)	!A1&!A2	0.0100	0.0010	0.1037	0.0669
B(HL)	ZN(LH)	!A1&A2	0.0100	0.0010	0.1207	0.0685
B(HL)	ZN(LH)	A1&!A2	0.0100	0.0010	0.1594	0.0966
A2(HL)	ZN(LH)	A1&!B	0.0100	0.0010	0.1174	0.0951
A2(LH)	ZN(HL)	A1&!B	0.0100	0.0010	0.0635	0.0282
A1(HL)	ZN(LH)	A2&!B	0.0100	0.0010	0.0849	0.0651
A1(LH)	ZN(HL)	A2&!B	0.0100	0.0010	0.0527	0.0283

DYNAMIC ENERGY

Input Pin	When Condition	Tin (ns)	Output	Out Load (pf)	Energy (uW/MHz)
A1	A2&!B	0.0100	ZN(LH)	0.0010	0.3353
B	!A1&!A2	0.0100	ZN(HL)	0.0010	0.1430
B	!A1&A2	0.0100	ZN(HL)	0.0010	0.1232
B	A1&!A2	0.0100	ZN(HL)	0.0010	0.1231
A2	A1&!B	0.0100	ZN(LH)	0.0010	0.4506
A1	A2&!B	0.0100	ZN(HL)	0.0010	0.0108
B	!A1&!A2	0.0100	ZN(LH)	0.0010	0.5206
B	!A1&A2	0.0100	ZN(LH)	0.0010	0.4541
B	A1&!A2	0.0100	ZN(LH)	0.0010	0.5827
A2	A1&!B	0.0100	ZN(HL)	0.0010	0.0105
B(HL)	A1&A2	0.0100	n/a	n/a	0.1189
A2(LH)	!A1&!B	0.0100	n/a	n/a	-0.1200
A2(LH)	!A1&B	0.0100	n/a	n/a	-0.0283
A2(LH)	A1&B	0.0100	n/a	n/a	-0.0317
A1(LH)	!A2&!B	0.0100	n/a	n/a	-0.0938
A1(LH)	!A2&B	0.0100	n/a	n/a	-0.0283
A1(LH)	A2&B	0.0100	n/a	n/a	-0.0316
A2(HL)	!A1&!B	0.0100	n/a	n/a	0.1327
A2(HL)	!A1&B	0.0100	n/a	n/a	0.0312
A2(HL)	A1&B	0.0100	n/a	n/a	0.1214
B(LH)	A1&A2	0.0100	n/a	n/a	-0.0919
A1(HL)	!A2&!B	0.0100	n/a	n/a	0.1344
A1(HL)	!A2&B	0.0100	n/a	n/a	0.0312
A1(HL)	A2&B	0.0100	n/a	n/a	0.1214

LEAKAGE POWER

When Condition	Power (nW)
!A1&!A2&!B	0.1514
!A1&A2&!B	0.1521
A1&!A2&!B	0.2316
!A1&!A2&B	0.2609
!A1&A2&B	0.2667
A1&!A2&B	0.2667
A1&A2&!B	0.1574
A1&A2&B	0.1572

gf180mcu_fd_sc_mcu9t5v0__aoi21_4

gf180mcu_fd_sc_mcu9t5v0__aoi21_4 symbol

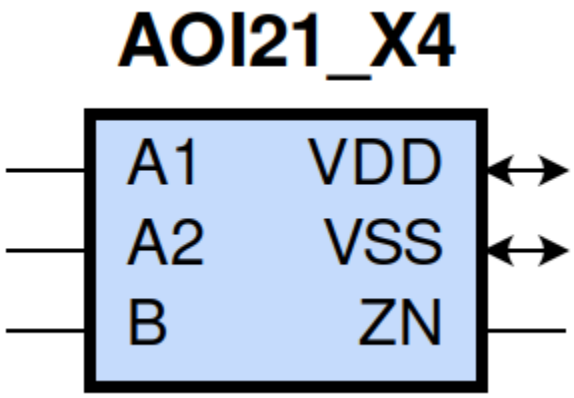

gf180mcu_fd_sc_mcu9t5v0__aoi21_4 schematic

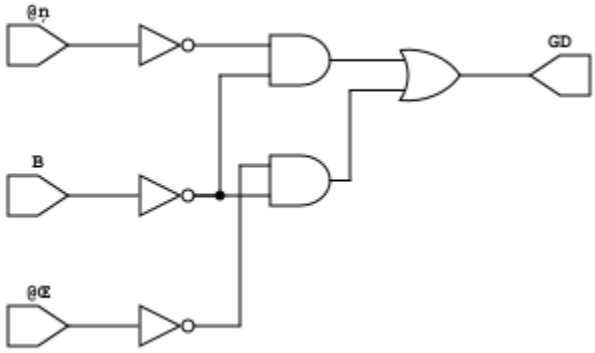

gf180mcu_fd_sc_mcu9t5v0__aoi21_4 layout

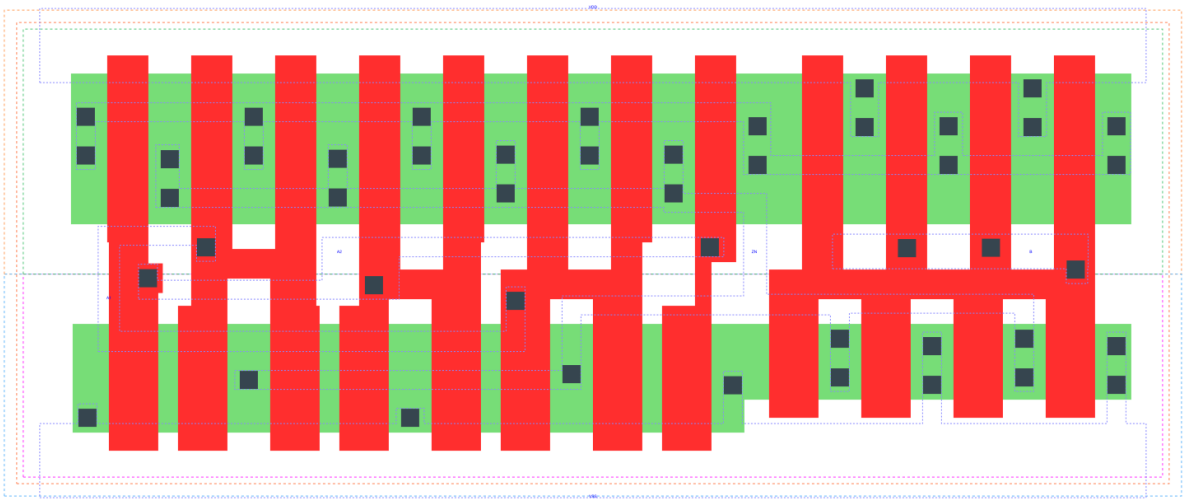

AOI21_X4 is a 2-input AND into 2-input NOR with 4X drive strength

Attributes

Attribute	Value
area	67.737600 μm^2

OUTPUT FUNCTIONS

Output Pin	Function
ZN	(((!A1)&(!B))|((!A2)&(!B)))

TRUTH TABLE FOR ZN

A1	A2	B	ZN
0	?	0	1
?	0	0	1
1	1	?	0
?	?	1	0

FUNCTIONAL SCHEMATIC

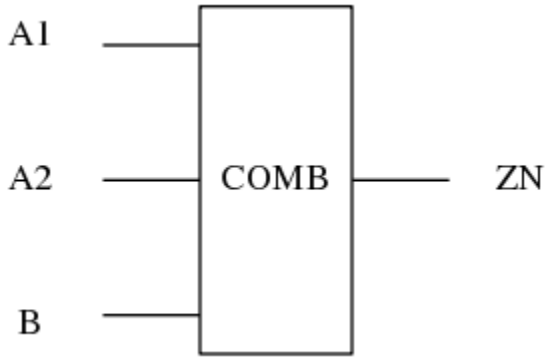

PIN CAPACITANCE (pf)

Pin	Type	Capacitance (pf)
A1	input	0.0287
A2	input	0.0282
B	input	0.0231

DELAY AND OUTPUT TRANSITION TIME corresponding to min slew and load

Input Pin	Output	When Condition	Tin (ns)	Out Load (pf)	Delay (ns)	Tout (ns)
A1(HL)	ZN(LH)	A2&!B	0.0100	0.0010	0.0815	0.0619
A1(LH)	ZN(HL)	A2&!B	0.0100	0.0010	0.0509	0.0267
A2(HL)	ZN(LH)	A1&!B	0.0100	0.0010	0.1143	0.0921
A2(LH)	ZN(HL)	A1&!B	0.0100	0.0010	0.0617	0.0267
B(LH)	ZN(HL)	!A1&!A2	0.0100	0.0010	0.0883	0.0499
B(LH)	ZN(HL)	!A1&A2	0.0100	0.0010	0.0693	0.0419
B(LH)	ZN(HL)	A1&!A2	0.0100	0.0010	0.0768	0.0597
B(HL)	ZN(LH)	!A1&!A2	0.0100	0.0010	0.0996	0.0642
B(HL)	ZN(LH)	!A1&A2	0.0100	0.0010	0.1158	0.0651
B(HL)	ZN(LH)	A1&!A2	0.0100	0.0010	0.1546	0.0932

DYNAMIC ENERGY

Input Pin	When Condition	Tin (ns)	Output	Out Load (pf)	Energy (uW/MHz)
A1	A2&!B	0.0100	ZN(LH)	0.0010	0.6697
B	!A1&!A2	0.0100	ZN(HL)	0.0010	0.2670
B	!A1&A2	0.0100	ZN(HL)	0.0010	0.2274
B	A1&!A2	0.0100	ZN(HL)	0.0010	0.2272
A2	A1&!B	0.0100	ZN(LH)	0.0010	0.9020
A1	A2&!B	0.0100	ZN(HL)	0.0010	0.0126
B	!A1&!A2	0.0100	ZN(LH)	0.0010	1.0387
B	!A1&A2	0.0100	ZN(LH)	0.0010	0.9057
B	A1&!A2	0.0100	ZN(LH)	0.0010	1.1637
A2	A1&!B	0.0100	ZN(HL)	0.0010	0.0119
B(HL)	A1&A2	0.0100	n/a	n/a	0.2370
A2(LH)	!A1&!B	0.0100	n/a	n/a	-0.2396
A2(LH)	!A1&B	0.0100	n/a	n/a	-0.0560
A2(LH)	A1&B	0.0100	n/a	n/a	-0.0629
A1(LH)	!A2&!B	0.0100	n/a	n/a	-0.1869
A1(LH)	!A2&B	0.0100	n/a	n/a	-0.0559
A1(LH)	A2&B	0.0100	n/a	n/a	-0.0629
A2(HL)	!A1&!B	0.0100	n/a	n/a	0.2655
A2(HL)	!A1&B	0.0100	n/a	n/a	0.0622
A2(HL)	A1&B	0.0100	n/a	n/a	0.2336
B(LH)	A1&A2	0.0100	n/a	n/a	-0.1831
A1(HL)	!A2&!B	0.0100	n/a	n/a	0.2690
A1(HL)	!A2&B	0.0100	n/a	n/a	0.0620
A1(HL)	A2&B	0.0100	n/a	n/a	0.2335

LEAKAGE POWER

When Condition	Power (nW)
!A1&!A2&!B	0.2529
!A1&A2&!B	0.2542
A1&!A2&!B	0.4133
!A1&!A2&B	0.4720
!A1&A2&B	0.4835
A1&!A2&B	0.4835
A1&A2&!B	0.2649
A1&A2&B	0.2642

gf180mcu_fd_sc_mcu9t5v0__aoi211_1

gf180mcu_fd_sc_mcu9t5v0__aoi211_1 symbol

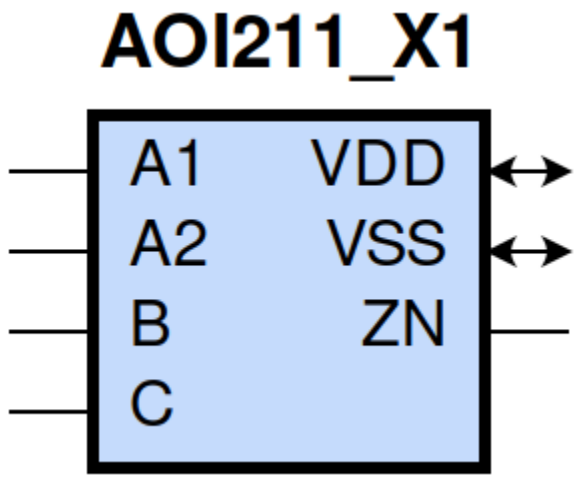

gf180mcu_fd_sc_mcu9t5v0__aoi211_1 schematic

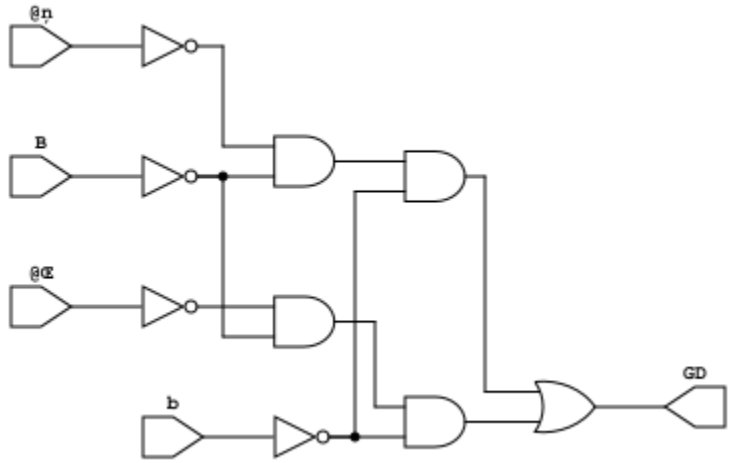

gf180mcu_fd_sc_mcu9t5v0__aoi211_1 layout

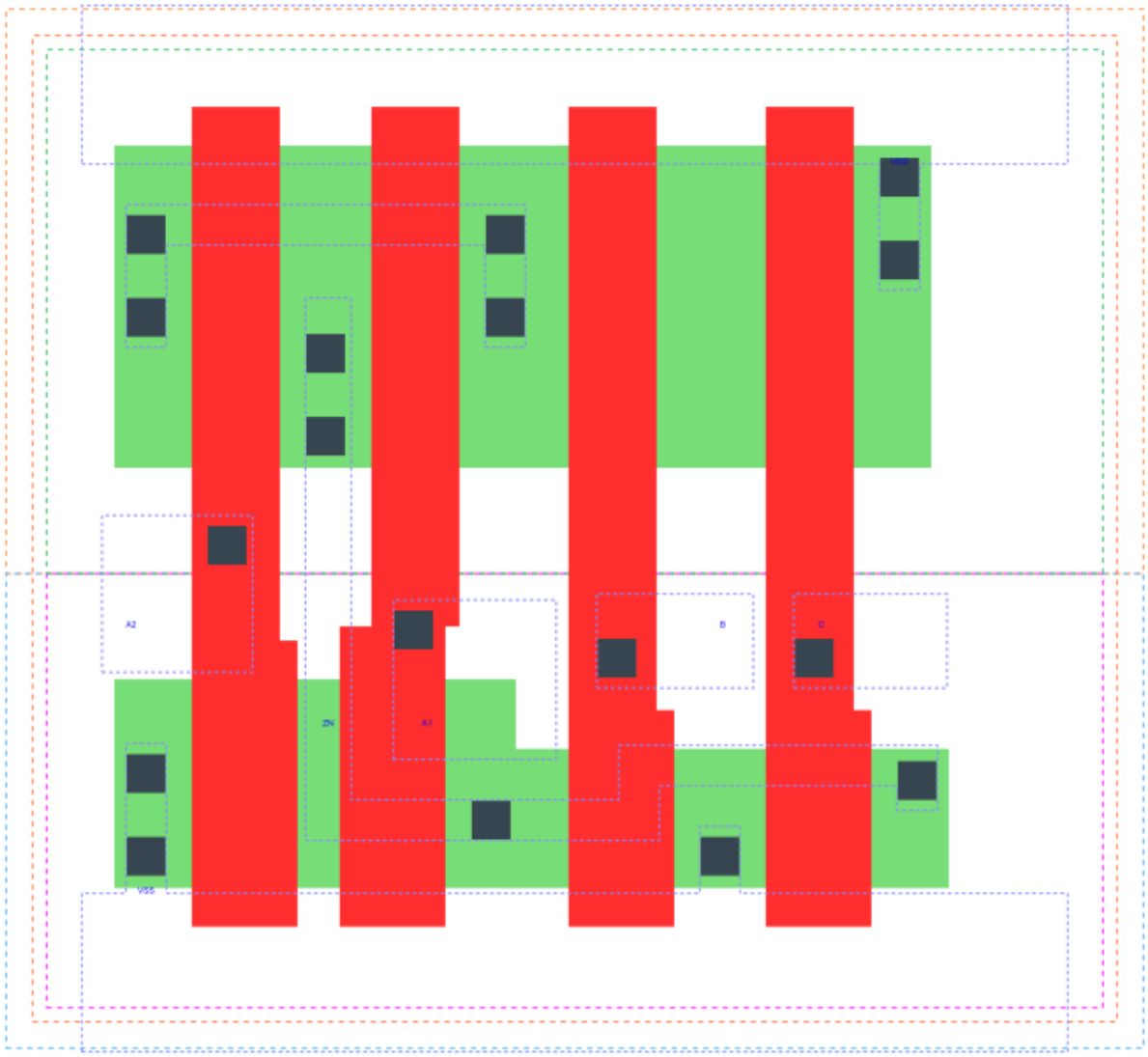

AOI211_X1 is a 2-input AND into 3-input NOR with 1X drive strength

Attributes

Attribute	Value
area	28.224000 μm^2

OUTPUT FUNCTIONS

Output Pin	Function
ZN	(((!A1)&(!B)&(!C))|((!A2)&(!B)&(!C)))

TRUTH TABLE FOR ZN

A1	A2	B	C	ZN
0	?	0	0	1
?	0	0	0	1
1	1	?	?	0
?	?	1	?	0
?	?	?	1	0

FUNCTIONAL SCHEMATIC

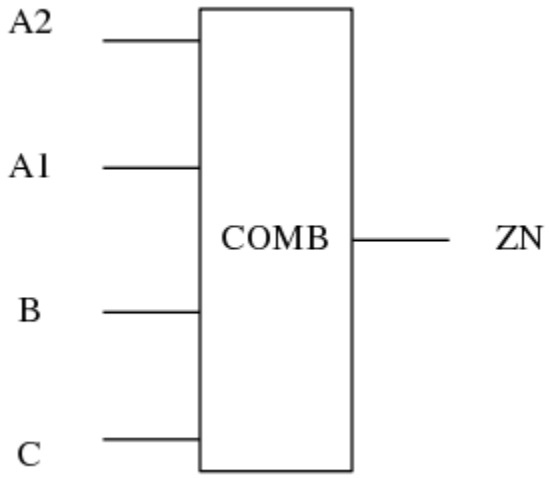

PIN CAPACITANCE (pf)

Pin	Type	Capacitance (pf)
A2	input	0.0068
A1	input	0.0070
B	input	0.0056
C	input	0.0056

DELAY AND OUTPUT TRANSITION TIME corresponding to min slew and load

Input Pin	Output	When Condition	Tin (ns)	Out Load (pf)	Delay (ns)	Tout (ns)
A2(HL)	ZN(LH)	A1&!B&!C	0.0100	0.0010	0.1687	0.1685
A2(LH)	ZN(HL)	A1&!B&!C	0.0100	0.0010	0.0784	0.0397
A1(HL)	ZN(LH)	A2&!B&!C	0.0100	0.0010	0.1285	0.1265
A1(LH)	ZN(HL)	A2&!B&!C	0.0100	0.0010	0.0675	0.0397
B(LH)	ZN(HL)	!A1&!A2&!C	0.0100	0.0010	0.1175	0.0697
B(LH)	ZN(HL)	!A1&A2&!C	0.0100	0.0010	0.0968	0.0603
B(LH)	ZN(HL)	A1&!A2&!C	0.0100	0.0010	0.1056	0.0781
B(HL)	ZN(LH)	!A1&!A2&!C	0.0100	0.0010	0.1848	0.1433
B(HL)	ZN(LH)	!A1&A2&!C	0.0100	0.0010	0.2075	0.1353
B(HL)	ZN(LH)	A1&!A2&!C	0.0100	0.0010	0.2586	0.1738
C(HL)	ZN(LH)	!A1&!A2&!B	0.0100	0.0010	0.2082	0.1435
C(HL)	ZN(LH)	!A1&A2&!B	0.0100	0.0010	0.2305	0.1356
C(HL)	ZN(LH)	A1&!A2&!B	0.0100	0.0010	0.2816	0.1738
C(LH)	ZN(HL)	!A1&!A2&!B	0.0100	0.0010	0.1307	0.0833
C(LH)	ZN(HL)	!A1&A2&!B	0.0100	0.0010	0.1017	0.0725
C(LH)	ZN(HL)	A1&!A2&!B	0.0100	0.0010	0.1129	0.0928

DYNAMIC ENERGY

Input Pin	When Condition	Tin (ns)	Output	Out Load (pf)	Energy (uW/MHz)
C	!A1&!A2&!B	0.0100	ZN(LH)	0.0010	0.3319
C	!A1&A2&!B	0.0100	ZN(LH)	0.0010	0.2987
C	A1&!A2&!B	0.0100	ZN(LH)	0.0010	0.3560
C	!A1&!A2&!B	0.0100	ZN(HL)	0.0010	0.1079
C	!A1&A2&!B	0.0100	ZN(HL)	0.0010	0.0985
C	A1&!A2&!B	0.0100	ZN(HL)	0.0010	0.0985
A1	A2&!B&!C	0.0100	ZN(LH)	0.0010	0.1999
B	!A1&!A2&!C	0.0100	ZN(HL)	0.0010	0.0757
B	!A1&A2&!C	0.0100	ZN(HL)	0.0010	0.0657
B	A1&!A2&!C	0.0100	ZN(HL)	0.0010	0.0658
A2	A1&!B&!C	0.0100	ZN(LH)	0.0010	0.2497
A1	A2&!B&!C	0.0100	ZN(HL)	0.0010	0.0044
B	!A1&!A2&!C	0.0100	ZN(LH)	0.0010	0.2886
B	!A1&A2&!C	0.0100	ZN(LH)	0.0010	0.2554
B	A1&!A2&!C	0.0100	ZN(LH)	0.0010	0.3128
A2	A1&!B&!C	0.0100	ZN(HL)	0.0010	0.0043
B(HL)	!A1&!A2&C	0.0100	n/a	n/a	0.0377
B(HL)	!A1&A2&C	0.0100	n/a	n/a	0.0376
B(HL)	A1&!A2&C	0.0100	n/a	n/a	0.0376
B(HL)	A1&A2&!C	0.0100	n/a	n/a	0.0597
B(HL)	A1&A2&C	0.0100	n/a	n/a	0.0358
A2(LH)	!A1&!B&!C	0.0100	n/a	n/a	-0.0601

continues on next page

Table 163 – continued from previous page

A2(LH)	!A1&!B&C	0.0100	n/a	n/a	-0.0146
A2(LH)	!A1&B&!C	0.0100	n/a	n/a	-0.0143
A2(LH)	!A1&B&C	0.0100	n/a	n/a	-0.0143
A2(LH)	A1&!B&C	0.0100	n/a	n/a	-0.0162
A2(LH)	A1&B&!C	0.0100	n/a	n/a	-0.0161
A2(LH)	A1&B&C	0.0100	n/a	n/a	-0.0161
A1(LH)	!A2&!B&!C	0.0100	n/a	n/a	-0.0480
A1(LH)	!A2&!B&C	0.0100	n/a	n/a	-0.0145
A1(LH)	!A2&B&!C	0.0100	n/a	n/a	-0.0143
A1(LH)	!A2&B&C	0.0100	n/a	n/a	-0.0143
A1(LH)	A2&!B&C	0.0100	n/a	n/a	-0.0162
A1(LH)	A2&B&!C	0.0100	n/a	n/a	-0.0161
A1(LH)	A2&B&C	0.0100	n/a	n/a	-0.0161
C(HL)	!A1&!A2&B	0.0100	n/a	n/a	0.0596
C(HL)	!A1&A2&B	0.0100	n/a	n/a	0.0596
C(HL)	A1&!A2&B	0.0100	n/a	n/a	0.0596
C(HL)	A1&A2&!B	0.0100	n/a	n/a	0.0597
C(HL)	A1&A2&B	0.0100	n/a	n/a	0.0596
A2(HL)	!A1&!B&!C	0.0100	n/a	n/a	0.0657
A2(HL)	!A1&!B&C	0.0100	n/a	n/a	0.0158
A2(HL)	!A1&B&!C	0.0100	n/a	n/a	0.0159
A2(HL)	!A1&B&C	0.0100	n/a	n/a	0.0159
A2(HL)	A1&!B&C	0.0100	n/a	n/a	0.1006
A2(HL)	A1&B&!C	0.0100	n/a	n/a	0.0628
A2(HL)	A1&B&C	0.0100	n/a	n/a	0.0628
B(LH)	!A1&!A2&C	0.0100	n/a	n/a	-0.0193
B(LH)	!A1&A2&C	0.0100	n/a	n/a	-0.0193
B(LH)	A1&!A2&C	0.0100	n/a	n/a	-0.0193
B(LH)	A1&A2&!C	0.0100	n/a	n/a	-0.0438
B(LH)	A1&A2&C	0.0100	n/a	n/a	-0.0356
A1(HL)	!A2&!B&!C	0.0100	n/a	n/a	0.0665
A1(HL)	!A2&!B&C	0.0100	n/a	n/a	0.0158
A1(HL)	!A2&B&!C	0.0100	n/a	n/a	0.0159
A1(HL)	!A2&B&C	0.0100	n/a	n/a	0.0159
A1(HL)	A2&!B&C	0.0100	n/a	n/a	0.1005
A1(HL)	A2&B&!C	0.0100	n/a	n/a	0.0628
A1(HL)	A2&B&C	0.0100	n/a	n/a	0.0628
C(LH)	!A1&!A2&B	0.0100	n/a	n/a	-0.0527
C(LH)	!A1&A2&B	0.0100	n/a	n/a	-0.0527
C(LH)	A1&!A2&B	0.0100	n/a	n/a	-0.0527
C(LH)	A1&A2&!B	0.0100	n/a	n/a	-0.0502
C(LH)	A1&A2&B	0.0100	n/a	n/a	-0.0559

LEAKAGE POWER

When Condition	Power (nW)
!A1&!A2&!B&!C	0.1261
!A1&A2&!B&!C	0.1264
A1&!A2&!B&!C	0.1662
!A1&!A2&!B&C	0.1907
!A1&!A2&B&!C	0.1554
!A1&!A2&B&C	0.1554
!A1&A2&!B&C	0.1935
!A1&A2&B&!C	0.1583
!A1&A2&B&C	0.1583
A1&!A2&!B&C	0.1935
A1&!A2&B&!C	0.1583
A1&!A2&B&C	0.1583
A1&A2&!B&!C	0.1037
A1&A2&!B&C	0.1037
A1&A2&B&!C	0.1037
A1&A2&B&C	0.1037

gf180mcu_fd_sc_mcu9t5v0__aoi211_2

gf180mcu_fd_sc_mcu9t5v0__aoi211_2 symbol

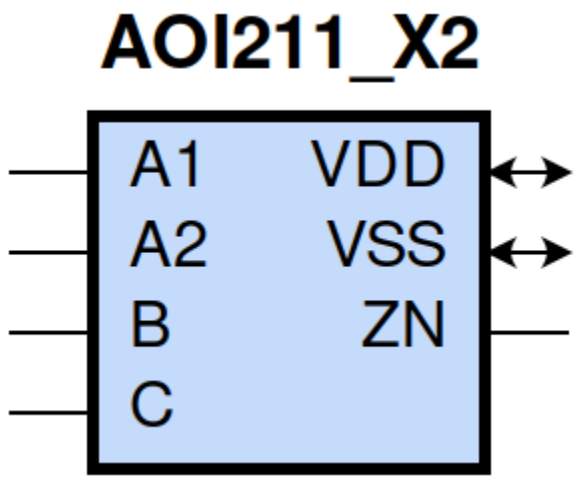

gf180mcu_fd_sc_mcu9t5v0__aoi211_2 schematic

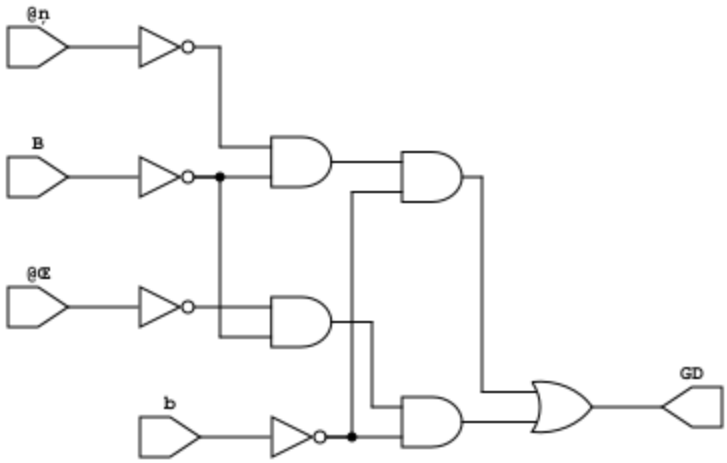

gf180mcu_fd_sc_mcu9t5v0__aoi211_2 layout

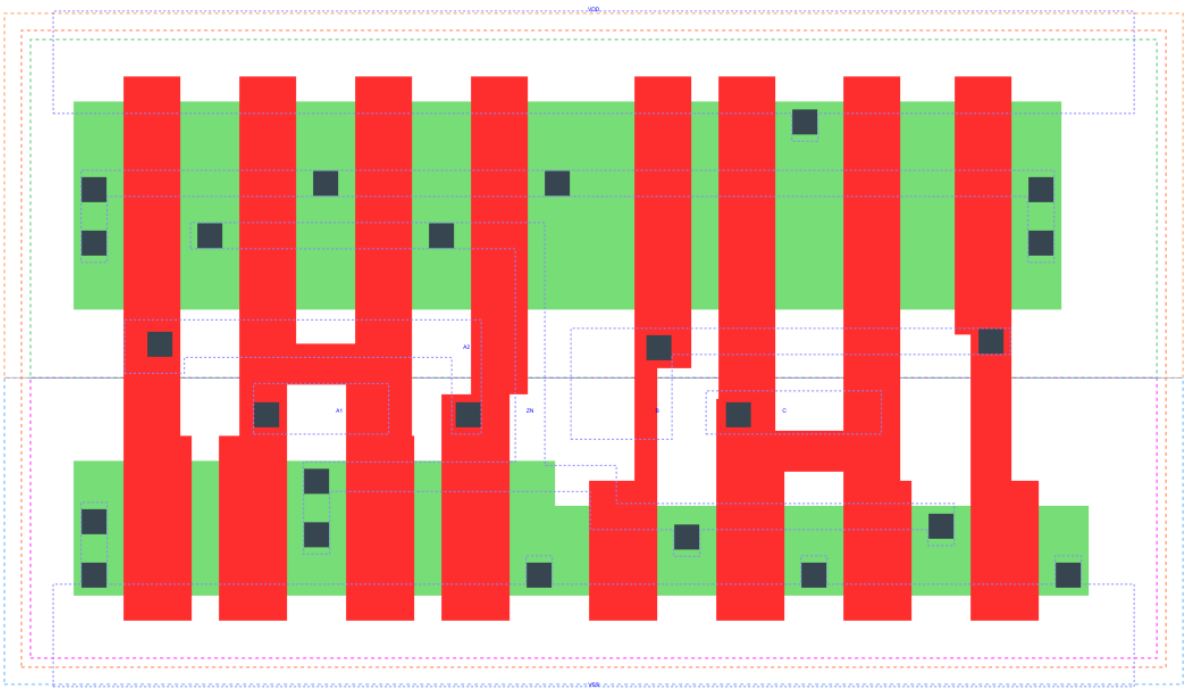

AOI211_X2 is a 2-input AND into 3-input NOR with 2X drive strength

Attributes

Attribute	Value
area	47.980800 μm^2

OUTPUT FUNCTIONS

Output Pin	Function
ZN	(((!A1)&(!B)&(!C))|((!A2)&(!B)&(!C)))

TRUTH TABLE FOR ZN

A1	A2	B	C	ZN
0	?	0	0	1
?	0	0	0	1
1	1	?	?	0
?	?	1	?	0
?	?	?	1	0

FUNCTIONAL SCHEMATIC

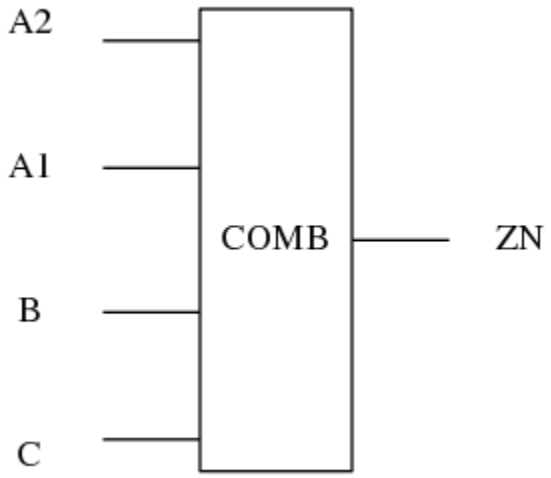

PIN CAPACITANCE (pf)

Pin	Type	Capacitance (pf)
A2	input	0.0137
A1	input	0.0133
B	input	0.0117
C	input	0.0111

DELAY AND OUTPUT TRANSITION TIME corresponding to min slew and load

Input Pin	Output	When Condition	Tin (ns)	Out Load (pf)	Delay (ns)	Tout (ns)
A2(HL)	ZN(LH)	A1&!B&!C	0.0100	0.0010	0.1458	0.1484
A2(LH)	ZN(HL)	A1&!B&!C	0.0100	0.0010	0.0703	0.0330
A1(HL)	ZN(LH)	A2&!B&!C	0.0100	0.0010	0.1057	0.1054
A1(LH)	ZN(HL)	A2&!B&!C	0.0100	0.0010	0.0595	0.0331
B(LH)	ZN(HL)	!A1&!A2&!C	0.0100	0.0010	0.1105	0.0635
B(LH)	ZN(HL)	!A1&A2&!C	0.0100	0.0010	0.0886	0.0542
B(LH)	ZN(HL)	A1&!A2&!C	0.0100	0.0010	0.0976	0.0727
B(HL)	ZN(LH)	!A1&!A2&!C	0.0100	0.0010	0.1694	0.1300
B(HL)	ZN(LH)	!A1&A2&!C	0.0100	0.0010	0.1887	0.1184
B(HL)	ZN(LH)	A1&!A2&!C	0.0100	0.0010	0.2401	0.1562
C(HL)	ZN(LH)	!A1&!A2&!B	0.0100	0.0010	0.1899	0.1304
C(HL)	ZN(LH)	!A1&A2&!B	0.0100	0.0010	0.2093	0.1186
C(HL)	ZN(LH)	A1&!A2&!B	0.0100	0.0010	0.2606	0.1563
C(LH)	ZN(HL)	!A1&!A2&!B	0.0100	0.0010	0.1219	0.0760
C(LH)	ZN(HL)	!A1&A2&!B	0.0100	0.0010	0.0919	0.0646
C(LH)	ZN(HL)	A1&!A2&!B	0.0100	0.0010	0.1034	0.0858

DYNAMIC ENERGY

Input Pin	When Condition	Tin (ns)	Output	Out Load (pf)	Energy (uW/MHz)
C	!A1&!A2&!B	0.0100	ZN(LH)	0.0010	0.6305
C	!A1&A2&!B	0.0100	ZN(LH)	0.0010	0.5640
C	A1&!A2&!B	0.0100	ZN(LH)	0.0010	0.6790
C	!A1&!A2&!B	0.0100	ZN(HL)	0.0010	0.2082
C	!A1&A2&!B	0.0100	ZN(HL)	0.0010	0.1893
C	A1&!A2&!B	0.0100	ZN(HL)	0.0010	0.1892
A1	A2&!B&!C	0.0100	ZN(LH)	0.0010	0.3576
B	!A1&!A2&!C	0.0100	ZN(HL)	0.0010	0.1573
B	!A1&A2&!C	0.0100	ZN(HL)	0.0010	0.1375
B	A1&!A2&!C	0.0100	ZN(HL)	0.0010	0.1377
A2	A1&!B&!C	0.0100	ZN(LH)	0.0010	0.4591
A1	A2&!B&!C	0.0100	ZN(HL)	0.0010	0.0073
B	!A1&!A2&!C	0.0100	ZN(LH)	0.0010	0.5437
B	!A1&A2&!C	0.0100	ZN(LH)	0.0010	0.4773

continues on next page

Table 164 – continued from previous page

B	A1&!A2&!C	0.0100	ZN(LH)	0.0010	0.5923
A2	A1&!B&!C	0.0100	ZN(HL)	0.0010	0.0069
B(HL)	!A1&!A2&C	0.0100	n/a	n/a	0.0623
B(HL)	!A1&A2&C	0.0100	n/a	n/a	0.0620
B(HL)	A1&!A2&C	0.0100	n/a	n/a	0.0620
B(HL)	A1&A2&!C	0.0100	n/a	n/a	0.1193
B(HL)	A1&A2&C	0.0100	n/a	n/a	0.0692
A2(LH)	!A1&!B&!C	0.0100	n/a	n/a	-0.1199
A2(LH)	!A1&!B&C	0.0100	n/a	n/a	-0.0292
A2(LH)	!A1&B&!C	0.0100	n/a	n/a	-0.0289
A2(LH)	!A1&B&C	0.0100	n/a	n/a	-0.0289
A2(LH)	A1&!B&C	0.0100	n/a	n/a	-0.0321
A2(LH)	A1&B&!C	0.0100	n/a	n/a	-0.0320
A2(LH)	A1&B&C	0.0100	n/a	n/a	-0.0320
A1(LH)	!A2&!B&!C	0.0100	n/a	n/a	-0.0961
A1(LH)	!A2&!B&C	0.0100	n/a	n/a	-0.0292
A1(LH)	!A2&B&!C	0.0100	n/a	n/a	-0.0289
A1(LH)	!A2&B&C	0.0100	n/a	n/a	-0.0289
A1(LH)	A2&!B&C	0.0100	n/a	n/a	-0.0320
A1(LH)	A2&B&!C	0.0100	n/a	n/a	-0.0319
A1(LH)	A2&B&C	0.0100	n/a	n/a	-0.0319
C(HL)	!A1&!A2&B	0.0100	n/a	n/a	0.1191
C(HL)	!A1&A2&B	0.0100	n/a	n/a	0.1191
C(HL)	A1&!A2&B	0.0100	n/a	n/a	0.1191
C(HL)	A1&A2&!B	0.0100	n/a	n/a	0.1191
C(HL)	A1&A2&B	0.0100	n/a	n/a	0.1191
A2(HL)	!A1&!B&!C	0.0100	n/a	n/a	0.1312
A2(HL)	!A1&!B&C	0.0100	n/a	n/a	0.0315
A2(HL)	!A1&B&!C	0.0100	n/a	n/a	0.0316
A2(HL)	!A1&B&C	0.0100	n/a	n/a	0.0316
A2(HL)	A1&!B&C	0.0100	n/a	n/a	0.1938
A2(HL)	A1&B&!C	0.0100	n/a	n/a	0.1312
A2(HL)	A1&B&C	0.0100	n/a	n/a	0.1312
B(LH)	!A1&!A2&C	0.0100	n/a	n/a	-0.0380
B(LH)	!A1&A2&C	0.0100	n/a	n/a	-0.0381
B(LH)	A1&!A2&C	0.0100	n/a	n/a	-0.0381
B(LH)	A1&A2&!C	0.0100	n/a	n/a	-0.0872
B(LH)	A1&A2&C	0.0100	n/a	n/a	-0.0706
A1(HL)	!A2&!B&!C	0.0100	n/a	n/a	0.1327
A1(HL)	!A2&!B&C	0.0100	n/a	n/a	0.0314
A1(HL)	!A2&B&!C	0.0100	n/a	n/a	0.0316
A1(HL)	!A2&B&C	0.0100	n/a	n/a	0.0315
A1(HL)	A2&!B&C	0.0100	n/a	n/a	0.1939
A1(HL)	A2&B&!C	0.0100	n/a	n/a	0.1313
A1(HL)	A2&B&C	0.0100	n/a	n/a	0.1312
C(LH)	!A1&!A2&B	0.0100	n/a	n/a	-0.1061
C(LH)	!A1&A2&B	0.0100	n/a	n/a	-0.1062
C(LH)	A1&!A2&B	0.0100	n/a	n/a	-0.1062
C(LH)	A1&A2&!B	0.0100	n/a	n/a	-0.0997
C(LH)	A1&A2&B	0.0100	n/a	n/a	-0.1120

LEAKAGE POWER

When Condition	Power (nW)
!A1&!A2&!B&!C	0.2023
!A1&A2&!B&!C	0.2029
A1&!A2&!B&!C	0.2824
!A1&!A2&!B&C	0.3314
!A1&!A2&B&!C	0.2609
!A1&!A2&B&C	0.2609
!A1&A2&!B&C	0.3371
!A1&A2&B&!C	0.2666
!A1&A2&B&C	0.2666
A1&!A2&!B&C	0.3371
A1&!A2&B&!C	0.2666
A1&!A2&B&C	0.2666
A1&A2&!B&!C	0.1574
A1&A2&!B&C	0.1574
A1&A2&B&!C	0.1574
A1&A2&B&C	0.1574

gf180mcu_fd_sc_mcu9t5v0__aoi211_4

gf180mcu_fd_sc_mcu9t5v0__aoi211_4 symbol

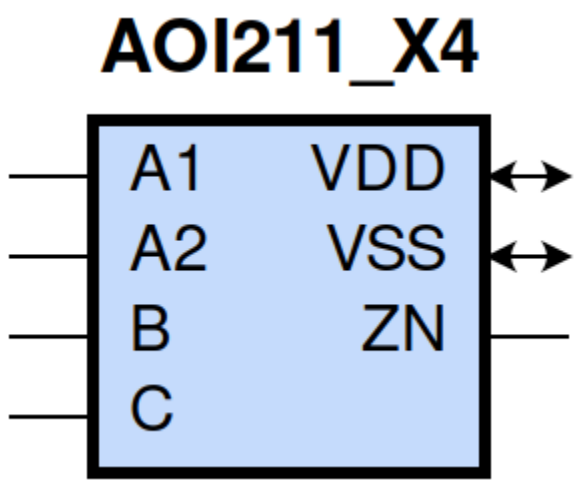

gf180mcu_fd_sc_mcu9t5v0__aoi211_4 schematic

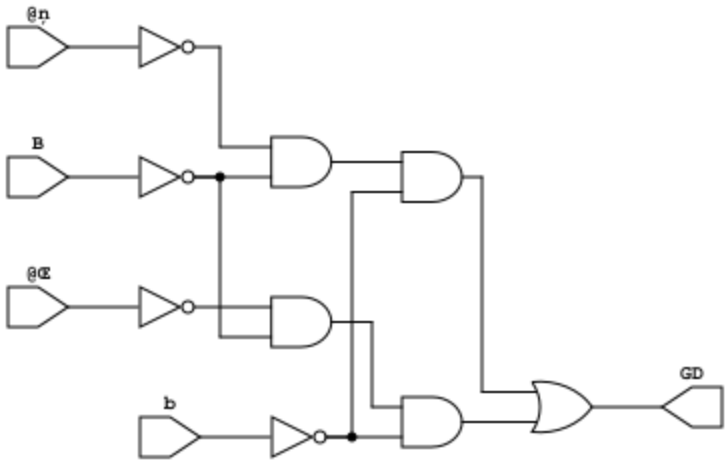

gf180mcu_fd_sc_mcu9t5v0__aoi211_4 layout

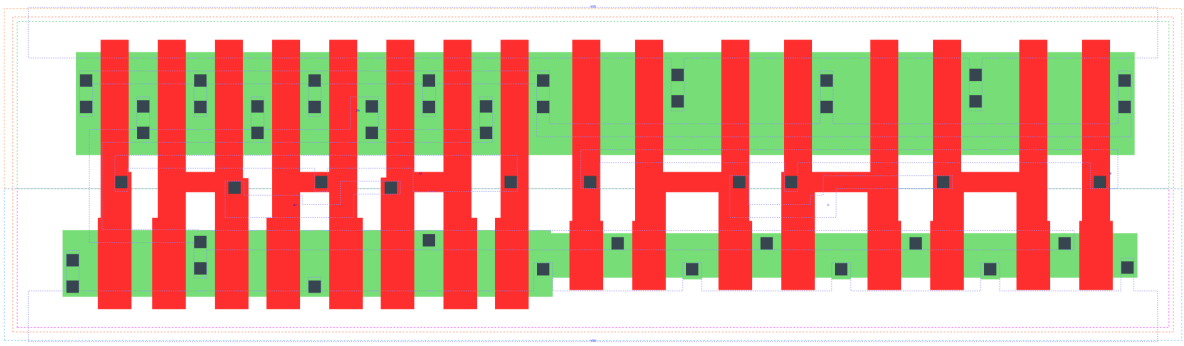

AOI211_X4 is a 2-input AND into 3-input NOR with 4X drive strength

Attributes

Attribute	Value
area	101.606400 μm^2

OUTPUT FUNCTIONS

Output Pin	Function
ZN	(((!A1)&(!B)&(!C))|((!A2)&(!B)&(!C)))

TRUTH TABLE FOR ZN

A1	A2	B	C	ZN
0	?	0	0	1
?	0	0	0	1
1	1	?	?	0
?	?	1	?	0
?	?	?	1	0

FUNCTIONAL SCHEMATIC

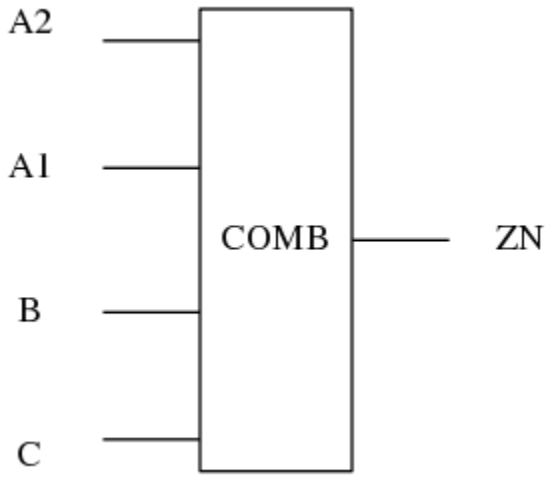

PIN CAPACITANCE (pf)

Pin	Type	Capacitance (pf)
A2	input	0.0277
A1	input	0.0270
B	input	0.0239
C	input	0.0226

DELAY AND OUTPUT TRANSITION TIME corresponding to min slew and load

Input Pin	Output	When Condition	Tin (ns)	Out Load (pf)	Delay (ns)	Tout (ns)
A2(HL)	ZN(LH)	A1&!B&!C	0.0100	0.0010	0.1471	0.1499
A2(LH)	ZN(HL)	A1&!B&!C	0.0100	0.0010	0.0710	0.0332
A1(HL)	ZN(LH)	A2&!B&!C	0.0100	0.0010	0.1051	0.1052
A1(LH)	ZN(HL)	A2&!B&!C	0.0100	0.0010	0.0597	0.0332
B(LH)	ZN(HL)	!A1&!A2&!C	0.0100	0.0010	0.1108	0.0637
B(LH)	ZN(HL)	!A1&A2&!C	0.0100	0.0010	0.0888	0.0544
B(LH)	ZN(HL)	A1&!A2&!C	0.0100	0.0010	0.0979	0.0735
B(HL)	ZN(LH)	!A1&!A2&!C	0.0100	0.0010	0.1694	0.1306
B(HL)	ZN(LH)	!A1&A2&!C	0.0100	0.0010	0.1888	0.1191
B(HL)	ZN(LH)	A1&!A2&!C	0.0100	0.0010	0.2422	0.1580
C(HL)	ZN(LH)	!A1&!A2&!B	0.0100	0.0010	0.1928	0.1309
C(HL)	ZN(LH)	!A1&A2&!B	0.0100	0.0010	0.2125	0.1193
C(HL)	ZN(LH)	A1&!A2&!B	0.0100	0.0010	0.2658	0.1581
C(LH)	ZN(HL)	!A1&!A2&!B	0.0100	0.0010	0.1233	0.0774
C(LH)	ZN(HL)	!A1&A2&!B	0.0100	0.0010	0.0925	0.0654
C(LH)	ZN(HL)	A1&!A2&!B	0.0100	0.0010	0.1044	0.0878

DYNAMIC ENERGY

Input Pin	When Condition	Tin (ns)	Output	Out Load (pf)	Energy (uW/MHz)
C	!A1&!A2&!B	0.0100	ZN(LH)	0.0010	1.3127
C	!A1&A2&!B	0.0100	ZN(LH)	0.0010	1.1796
C	A1&!A2&!B	0.0100	ZN(LH)	0.0010	1.4178
C	!A1&!A2&!B	0.0100	ZN(HL)	0.0010	0.4239
C	!A1&A2&!B	0.0100	ZN(HL)	0.0010	0.3866
C	A1&!A2&!B	0.0100	ZN(HL)	0.0010	0.3862
A1	A2&!B&!C	0.0100	ZN(LH)	0.0010	0.7409
B	!A1&!A2&!C	0.0100	ZN(HL)	0.0010	0.2945
B	!A1&A2&!C	0.0100	ZN(HL)	0.0010	0.2551
B	A1&!A2&!C	0.0100	ZN(HL)	0.0010	0.2553
A2	A1&!B&!C	0.0100	ZN(LH)	0.0010	0.9528
A1	A2&!B&!C	0.0100	ZN(HL)	0.0010	0.0145
B	!A1&!A2&!C	0.0100	ZN(LH)	0.0010	1.1379
B	!A1&A2&!C	0.0100	ZN(LH)	0.0010	1.0052
B	A1&!A2&!C	0.0100	ZN(LH)	0.0010	1.2432
A2	A1&!B&!C	0.0100	ZN(HL)	0.0010	0.0137
B(HL)	!A1&!A2&C	0.0100	n/a	n/a	0.1513
B(HL)	!A1&A2&C	0.0100	n/a	n/a	0.1506
B(HL)	A1&!A2&C	0.0100	n/a	n/a	0.1507
B(HL)	A1&A2&!C	0.0100	n/a	n/a	0.2368
B(HL)	A1&A2&C	0.0100	n/a	n/a	0.1360
A2(LH)	!A1&!B&!C	0.0100	n/a	n/a	-0.2396
A2(LH)	!A1&!B&C	0.0100	n/a	n/a	-0.0575
A2(LH)	!A1&B&!C	0.0100	n/a	n/a	-0.0568
A2(LH)	!A1&B&C	0.0100	n/a	n/a	-0.0568
A2(LH)	A1&!B&C	0.0100	n/a	n/a	-0.0631

continues on next page

Table 165 – continued from previous page

A2(LH)	A1&B&!C	0.0100	n/a	n/a	-0.0619
A2(LH)	A1&B&C	0.0100	n/a	n/a	-0.0619
A1(LH)	!A2&!B&!C	0.0100	n/a	n/a	-0.1840
A1(LH)	!A2&!B&C	0.0100	n/a	n/a	-0.0574
A1(LH)	!A2&B&!C	0.0100	n/a	n/a	-0.0567
A1(LH)	!A2&B&C	0.0100	n/a	n/a	-0.0567
A1(LH)	A2&!B&C	0.0100	n/a	n/a	-0.0630
A1(LH)	A2&B&!C	0.0100	n/a	n/a	-0.0618
A1(LH)	A2&B&C	0.0100	n/a	n/a	-0.0618
C(HL)	!A1&!A2&B	0.0100	n/a	n/a	0.2385
C(HL)	!A1&A2&B	0.0100	n/a	n/a	0.2385
C(HL)	A1&!A2&B	0.0100	n/a	n/a	0.2384
C(HL)	A1&A2&!B	0.0100	n/a	n/a	0.2361
C(HL)	A1&A2&B	0.0100	n/a	n/a	0.2385
A2(HL)	!A1&!B&!C	0.0100	n/a	n/a	0.2629
A2(HL)	!A1&!B&C	0.0100	n/a	n/a	0.0611
A2(HL)	!A1&B&!C	0.0100	n/a	n/a	0.0613
A2(HL)	!A1&B&C	0.0100	n/a	n/a	0.0612
A2(HL)	A1&!B&C	0.0100	n/a	n/a	0.3976
A2(HL)	A1&B&!C	0.0100	n/a	n/a	0.2466
A2(HL)	A1&B&C	0.0100	n/a	n/a	0.2465
B(LH)	!A1&!A2&C	0.0100	n/a	n/a	-0.0766
B(LH)	!A1&A2&C	0.0100	n/a	n/a	-0.0768
B(LH)	A1&!A2&C	0.0100	n/a	n/a	-0.0768
B(LH)	A1&A2&!C	0.0100	n/a	n/a	-0.1723
B(LH)	A1&A2&C	0.0100	n/a	n/a	-0.1385
A1(HL)	!A2&!B&!C	0.0100	n/a	n/a	0.2655
A1(HL)	!A2&!B&C	0.0100	n/a	n/a	0.0610
A1(HL)	!A2&B&!C	0.0100	n/a	n/a	0.0612
A1(HL)	!A2&B&C	0.0100	n/a	n/a	0.0611
A1(HL)	A2&!B&C	0.0100	n/a	n/a	0.3973
A1(HL)	A2&B&!C	0.0100	n/a	n/a	0.2464
A1(HL)	A2&B&C	0.0100	n/a	n/a	0.2463
C(LH)	!A1&!A2&B	0.0100	n/a	n/a	-0.2102
C(LH)	!A1&A2&B	0.0100	n/a	n/a	-0.2104
C(LH)	A1&!A2&B	0.0100	n/a	n/a	-0.2104
C(LH)	A1&A2&!B	0.0100	n/a	n/a	-0.1979
C(LH)	A1&A2&B	0.0100	n/a	n/a	-0.2222

LEAKAGE POWER

When Condition	Power (nW)
!A1&!A2&!B&!C	0.3545
!A1&A2&!B&!C	0.3557
A1&!A2&!B&!C	0.5148
!A1&!A2&!B&C	0.6131
!A1&!A2&B&!C	0.4720
!A1&!A2&B&C	0.4720
!A1&A2&!B&C	0.6244
!A1&A2&B&!C	0.4835
!A1&A2&B&C	0.4835
A1&!A2&!B&C	0.6244
A1&!A2&B&!C	0.4835
A1&!A2&B&C	0.4835
A1&A2&!B&!C	0.2649
A1&A2&!B&C	0.2639
A1&A2&B&!C	0.2640
A1&A2&B&C	0.2640

gf180mcu_fd_sc_mcu9t5v0__aoi22_1

gf180mcu_fd_sc_mcu9t5v0__aoi22_1 symbol

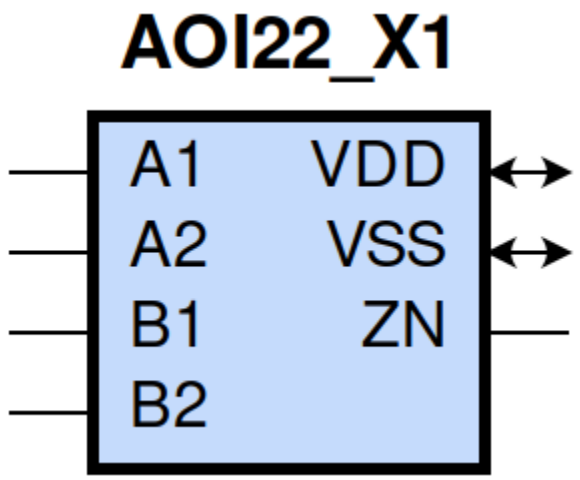

gf180mcu_fd_sc_mcu9t5v0__aoi22_1 schematic

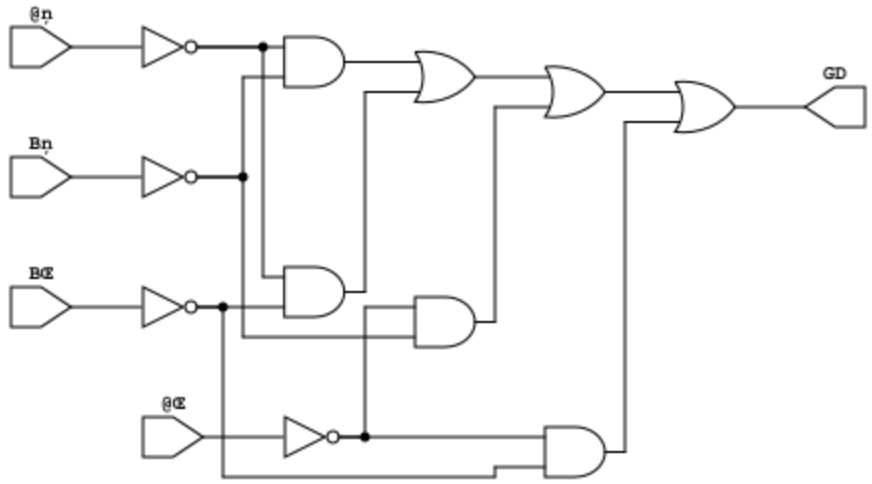

gf180mcu_fd_sc_mcu9t5v0__aoi22_1 layout

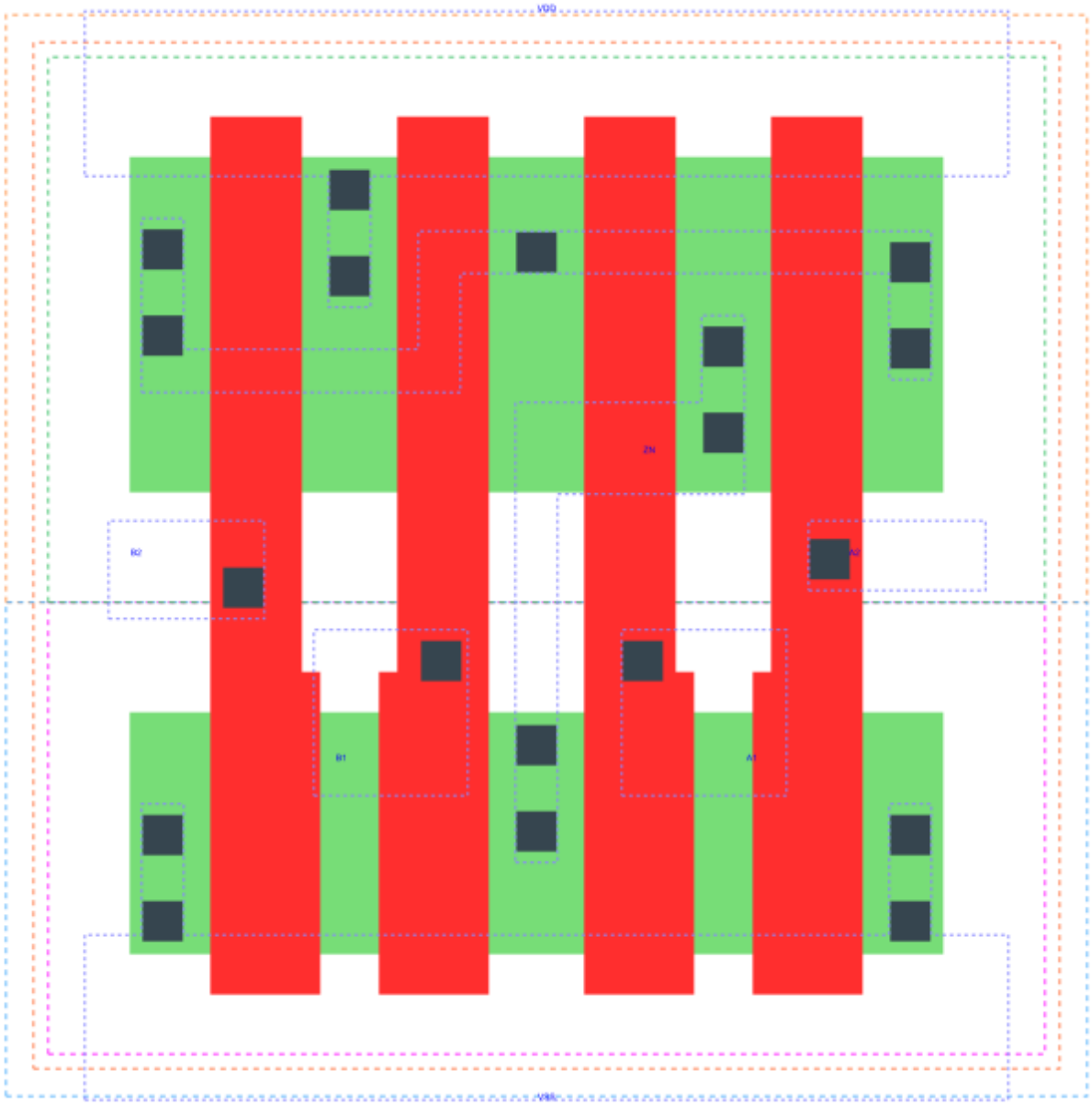

AOI22_X1 is a two 2-input AND into 2-input NOR with 1X drive strength

Attributes

Attribute	Value
area	25.401600 μm^2

OUTPUT FUNCTIONS

Output Pin	Function
ZN	(((!A1)&(!B1))|((!A1)&(!B2))|((!A2)&(!B1))|((!A2)&(!B2)))

TRUTH TABLE FOR ZN

A1	A2	B1	B2	ZN
0	?	0	?	1
0	?	?	0	1
?	0	0	?	1
?	0	?	0	1
1	1	?	?	0
?	?	1	1	0

FUNCTIONAL SCHEMATIC

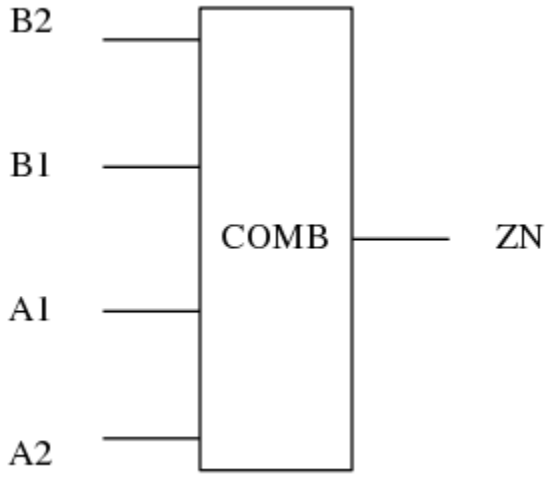

PIN CAPACITANCE (pf)

Pin	Type	Capacitance (pf)
B2	input	0.0067
B1	input	0.0069
A1	input	0.0070
A2	input	0.0068

DELAY AND OUTPUT TRANSITION TIME corresponding to min slew and load

Input Pin	Output	When Condition	Tin (ns)	Out Load (pf)	Delay (ns)	Tout (ns)
B2(HL)	ZN(LH)	!A1&!A2&B1	0.0100	0.0010	0.1480	0.0942
B2(HL)	ZN(LH)	!A1&A2&B1	0.0100	0.0010	0.1781	0.1027
B2(HL)	ZN(LH)	A1&!A2&B1	0.0100	0.0010	0.2176	0.1321
B2(LH)	ZN(HL)	!A1&!A2&B1	0.0100	0.0010	0.1163	0.0655
B2(LH)	ZN(HL)	!A1&A2&B1	0.0100	0.0010	0.0937	0.0560
B2(LH)	ZN(HL)	A1&!A2&B1	0.0100	0.0010	0.1032	0.0765
B1(HL)	ZN(LH)	!A1&!A2&B2	0.0100	0.0010	0.1210	0.0720
B1(HL)	ZN(LH)	!A1&A2&B2	0.0100	0.0010	0.1425	0.0735
B1(HL)	ZN(LH)	A1&!A2&B2	0.0100	0.0010	0.1853	0.1024
B1(LH)	ZN(HL)	!A1&!A2&B2	0.0100	0.0010	0.1051	0.0653
B1(LH)	ZN(HL)	!A1&A2&B2	0.0100	0.0010	0.0823	0.0564
B1(LH)	ZN(HL)	A1&!A2&B2	0.0100	0.0010	0.0919	0.0768
A1(HL)	ZN(LH)	A2&!B1&!B2	0.0100	0.0010	0.0723	0.0500
A1(HL)	ZN(LH)	A2&!B1&B2	0.0100	0.0010	0.0861	0.0683
A1(HL)	ZN(LH)	A2&B1&!B2	0.0100	0.0010	0.1265	0.1001
A1(LH)	ZN(HL)	A2&!B1&!B2	0.0100	0.0010	0.0540	0.0300
A1(LH)	ZN(HL)	A2&!B1&B2	0.0100	0.0010	0.0541	0.0300
A1(LH)	ZN(HL)	A2&B1&!B2	0.0100	0.0010	0.0587	0.0459
A2(HL)	ZN(LH)	A1&!B1&!B2	0.0100	0.0010	0.0973	0.0728
A2(HL)	ZN(LH)	A1&!B1&B2	0.0100	0.0010	0.1189	0.0998
A2(HL)	ZN(LH)	A1&B1&!B2	0.0100	0.0010	0.1582	0.1306
A2(LH)	ZN(HL)	A1&!B1&!B2	0.0100	0.0010	0.0652	0.0299
A2(LH)	ZN(HL)	A1&!B1&B2	0.0100	0.0010	0.0655	0.0299
A2(LH)	ZN(HL)	A1&B1&!B2	0.0100	0.0010	0.0701	0.0459

DYNAMIC ENERGY

Input Pin	When Condition	Tin (ns)	Output	Out Load (pf)	Energy (uW/MHz)
A1	A2&!B1&!B2	0.0100	ZN(LH)	0.0010	0.1674
A1	A2&!B1&B2	0.0100	ZN(LH)	0.0010	0.1672
A1	A2&B1&!B2	0.0100	ZN(LH)	0.0010	0.2351
B2	!A1&!A2&B1	0.0100	ZN(LH)	0.0010	0.3397
B2	!A1&A2&B1	0.0100	ZN(LH)	0.0010	0.3065
B2	A1&!A2&B1	0.0100	ZN(LH)	0.0010	0.3714

continues on next page

Table 166 – continued from previous page

B1	!A1&!A2&B2	0.0100	ZN(LH)	0.0010	0.2794
B1	!A1&A2&B2	0.0100	ZN(LH)	0.0010	0.2459
B1	A1&!A2&B2	0.0100	ZN(LH)	0.0010	0.3146
A2	A1&!B1&!B2	0.0100	ZN(LH)	0.0010	0.2260
A2	A1&!B1&B2	0.0100	ZN(LH)	0.0010	0.2261
A2	A1&B1&!B2	0.0100	ZN(LH)	0.0010	0.2913
B1	!A1&!A2&B2	0.0100	ZN(HL)	0.0010	0.0916
B1	!A1&A2&B2	0.0100	ZN(HL)	0.0010	0.0817
B1	A1&!A2&B2	0.0100	ZN(HL)	0.0010	0.0818
A1	A2&!B1&!B2	0.0100	ZN(HL)	0.0010	0.0025
A1	A2&!B1&B2	0.0100	ZN(HL)	0.0010	0.0030
A1	A2&B1&!B2	0.0100	ZN(HL)	0.0010	0.0030
B2	!A1&!A2&B1	0.0100	ZN(HL)	0.0010	0.0916
B2	!A1&A2&B1	0.0100	ZN(HL)	0.0010	0.0817
B2	A1&!A2&B1	0.0100	ZN(HL)	0.0010	0.0818
A2	A1&!B1&!B2	0.0100	ZN(HL)	0.0010	0.0024
A2	A1&!B1&B2	0.0100	ZN(HL)	0.0010	0.0029
A2	A1&B1&!B2	0.0100	ZN(HL)	0.0010	0.0030
A1(LH)	!A2&!B1&!B2	0.0100	n/a	n/a	-0.0451
A1(LH)	!A2&!B1&B2	0.0100	n/a	n/a	-0.0452
A1(LH)	!A2&B1&!B2	0.0100	n/a	n/a	-0.0452
A1(LH)	!A2&B1&B2	0.0100	n/a	n/a	-0.0153
A1(LH)	A2&B1&B2	0.0100	n/a	n/a	-0.0160
B2(LH)	!A1&!A2&!B1	0.0100	n/a	n/a	-0.0596
B2(LH)	!A1&A2&!B1	0.0100	n/a	n/a	-0.0595
B2(LH)	A1&!A2&!B1	0.0100	n/a	n/a	-0.0595
B2(LH)	A1&A2&!B1	0.0100	n/a	n/a	-0.0593
B2(LH)	A1&A2&B1	0.0100	n/a	n/a	-0.0486
A2(HL)	!A1&!B1&!B2	0.0100	n/a	n/a	0.0666
A2(HL)	!A1&!B1&B2	0.0100	n/a	n/a	0.0665
A2(HL)	!A1&B1&!B2	0.0100	n/a	n/a	0.0665
A2(HL)	!A1&B1&B2	0.0100	n/a	n/a	0.0158
A2(HL)	A1&B1&B2	0.0100	n/a	n/a	0.0821
B1(HL)	!A1&!A2&!B2	0.0100	n/a	n/a	0.0670
B1(HL)	!A1&A2&!B2	0.0100	n/a	n/a	0.0670
B1(HL)	A1&!A2&!B2	0.0100	n/a	n/a	0.0670
B1(HL)	A1&A2&!B2	0.0100	n/a	n/a	0.0597
B1(HL)	A1&A2&B2	0.0100	n/a	n/a	0.0597
B2(HL)	!A1&!A2&!B1	0.0100	n/a	n/a	0.0664
B2(HL)	!A1&A2&!B1	0.0100	n/a	n/a	0.0665
B2(HL)	A1&!A2&!B1	0.0100	n/a	n/a	0.0665
B2(HL)	A1&A2&!B1	0.0100	n/a	n/a	0.0597
B2(HL)	A1&A2&B1	0.0100	n/a	n/a	0.0597
A1(HL)	!A2&!B1&!B2	0.0100	n/a	n/a	0.0674
A1(HL)	!A2&!B1&B2	0.0100	n/a	n/a	0.0672
A1(HL)	!A2&B1&!B2	0.0100	n/a	n/a	0.0672
A1(HL)	!A2&B1&B2	0.0100	n/a	n/a	0.0158
A1(HL)	A2&B1&B2	0.0100	n/a	n/a	0.0821
B1(LH)	!A1&!A2&!B2	0.0100	n/a	n/a	-0.0444
B1(LH)	!A1&A2&!B2	0.0100	n/a	n/a	-0.0444
B1(LH)	A1&!A2&!B2	0.0100	n/a	n/a	-0.0444
B1(LH)	A1&A2&!B2	0.0100	n/a	n/a	-0.0593

continues on next page

Table 166 – continued from previous page

B1(LH)	A1&A2&B2	0.0100	n/a	n/a	-0.0487
A2(LH)	!A1&!B1&!B2	0.0100	n/a	n/a	-0.0601
A2(LH)	!A1&!B1&B2	0.0100	n/a	n/a	-0.0600
A2(LH)	!A1&B1&!B2	0.0100	n/a	n/a	-0.0600
A2(LH)	!A1&B1&B2	0.0100	n/a	n/a	-0.0153
A2(LH)	A1&B1&B2	0.0100	n/a	n/a	-0.0160

LEAKAGE POWER

When Condition	Power (nW)
!A1&!A2&!B1&!B2	0.1005
!A1&!A2&!B1&B2	0.1008
!A1&!A2&B1&!B2	0.1406
!A1&A2&!B1&!B2	0.1008
!A1&A2&!B1&B2	0.1012
!A1&A2&B1&!B2	0.1409
A1&!A2&!B1&!B2	0.1406
A1&!A2&!B1&B2	0.1409
A1&!A2&B1&!B2	0.1807
!A1&!A2&B1&B2	0.1746
!A1&A2&B1&B2	0.1774
A1&!A2&B1&B2	0.1774
A1&A2&!B1&!B2	0.1037
A1&A2&!B1&B2	0.1037
A1&A2&B1&!B2	0.1037
A1&A2&B1&B2	0.1037

gf180mcu_fd_sc_mcu9t5v0__aoi22_2

gf180mcu_fd_sc_mcu9t5v0__aoi22_2 symbol

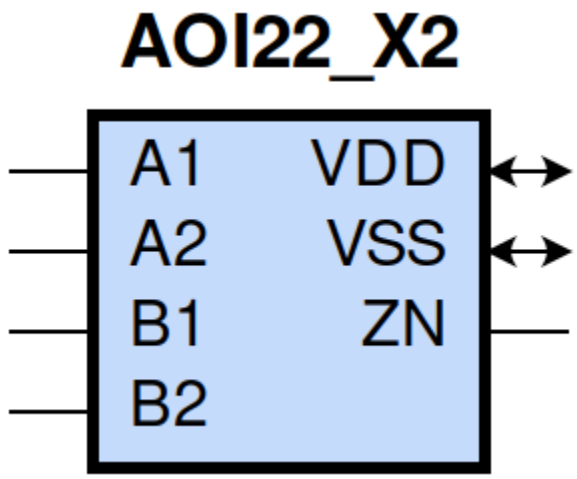

gf180mcu_fd_sc_mcu9t5v0__aoi22_2 schematic

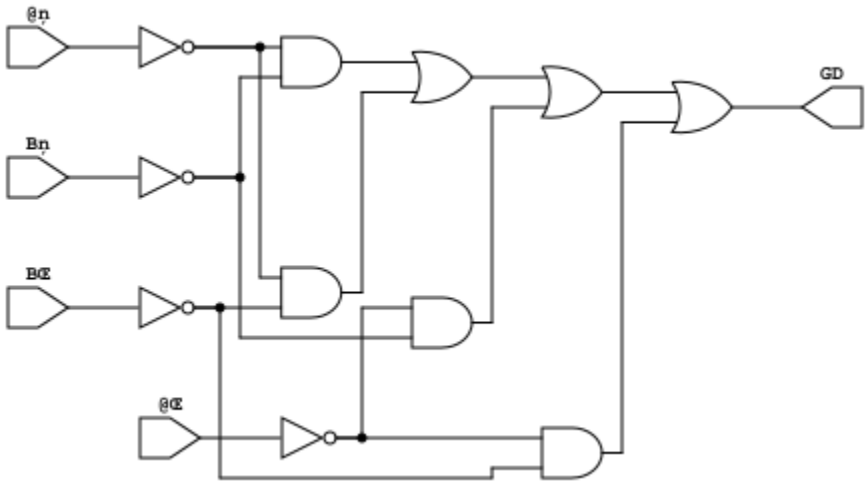

gf180mcu_fd_sc_mcu9t5v0__aoi22_2 layout

AOI22_X2 is a two 2-input AND into 2-input NOR with 2X drive strength

Attributes

Attribute	Value
area	45.158400 μm^2

OUTPUT FUNCTIONS

Output Pin	Function
ZN	(((!A1)&(!B1))|((!A1)&(!B2))|((!A2)&(!B1))|((!A2)&(!B2)))

TRUTH TABLE FOR ZN

A1	A2	B1	B2	ZN
0	?	0	?	1
0	?	?	0	1
?	0	0	?	1
?	0	?	0	1
1	1	?	?	0
?	?	1	1	0

FUNCTIONAL SCHEMATIC

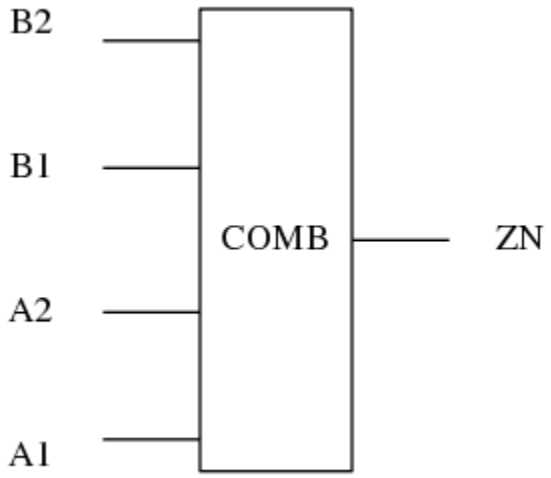

PIN CAPACITANCE (pf)

Pin	Type	Capacitance (pf)
B2	input	0.0135
B1	input	0.0133
A2	input	0.0144
A1	input	0.0139

DELAY AND OUTPUT TRANSITION TIME corresponding to min slew and load

Input Pin	Output	When Condition	Tin (ns)	Out Load (pf)	Delay (ns)	Tout (ns)
B2(HL)	ZN(LH)	!A1&!A2&B1	0.0100	0.0010	0.1448	0.0930
B2(HL)	ZN(LH)	!A1&A2&B1	0.0100	0.0010	0.1740	0.1016
B2(HL)	ZN(LH)	A1&!A2&B1	0.0100	0.0010	0.2136	0.1310
B2(LH)	ZN(HL)	!A1&!A2&B1	0.0100	0.0010	0.1141	0.0636
B2(LH)	ZN(HL)	!A1&A2&B1	0.0100	0.0010	0.0925	0.0544
B2(LH)	ZN(HL)	A1&!A2&B1	0.0100	0.0010	0.1017	0.0747
B1(HL)	ZN(LH)	!A1&!A2&B2	0.0100	0.0010	0.1183	0.0709
B1(HL)	ZN(LH)	!A1&A2&B2	0.0100	0.0010	0.1392	0.0726
B1(HL)	ZN(LH)	A1&!A2&B2	0.0100	0.0010	0.1816	0.1016
B1(LH)	ZN(HL)	!A1&!A2&B2	0.0100	0.0010	0.1030	0.0637
B1(LH)	ZN(HL)	!A1&A2&B2	0.0100	0.0010	0.0813	0.0550
B1(LH)	ZN(HL)	A1&!A2&B2	0.0100	0.0010	0.0905	0.0750
A2(HL)	ZN(LH)	A1&!B1&!B2	0.0100	0.0010	0.0974	0.0727
A2(HL)	ZN(LH)	A1&!B1&B2	0.0100	0.0010	0.1200	0.0997
A2(HL)	ZN(LH)	A1&B1&!B2	0.0100	0.0010	0.1590	0.1300
A2(LH)	ZN(HL)	A1&!B1&!B2	0.0100	0.0010	0.0652	0.0298
A2(LH)	ZN(HL)	A1&!B1&B2	0.0100	0.0010	0.0654	0.0298
A2(LH)	ZN(HL)	A1&B1&!B2	0.0100	0.0010	0.0699	0.0457
A1(HL)	ZN(LH)	A2&!B1&!B2	0.0100	0.0010	0.0725	0.0499
A1(HL)	ZN(LH)	A2&!B1&B2	0.0100	0.0010	0.0869	0.0687
A1(HL)	ZN(LH)	A2&B1&!B2	0.0100	0.0010	0.1271	0.0996
A1(LH)	ZN(HL)	A2&!B1&!B2	0.0100	0.0010	0.0538	0.0298
A1(LH)	ZN(HL)	A2&!B1&B2	0.0100	0.0010	0.0542	0.0298
A1(LH)	ZN(HL)	A2&B1&!B2	0.0100	0.0010	0.0586	0.0457

DYNAMIC ENERGY

Input Pin	When Condition	Tin (ns)	Output	Out Load (pf)	Energy (uW/MHz)
A1	A2&!B1&!B2	0.0100	ZN(LH)	0.0010	0.3584
A1	A2&!B1&B2	0.0100	ZN(LH)	0.0010	0.3579
A1	A2&B1&!B2	0.0100	ZN(LH)	0.0010	0.4923
B2	!A1&!A2&B1	0.0100	ZN(LH)	0.0010	0.6983
B2	!A1&A2&B1	0.0100	ZN(LH)	0.0010	0.6316
B2	A1&!A2&B1	0.0100	ZN(LH)	0.0010	0.7617

continues on next page

Table 167 – continued from previous page

B1	!A1&!A2&B2	0.0100	ZN(LH)	0.0010	0.5787
B1	!A1&A2&B2	0.0100	ZN(LH)	0.0010	0.5119
B1	A1&!A2&B2	0.0100	ZN(LH)	0.0010	0.6494
A2	A1&!B1&!B2	0.0100	ZN(LH)	0.0010	0.4757
A2	A1&!B1&B2	0.0100	ZN(LH)	0.0010	0.4759
A2	A1&B1&!B2	0.0100	ZN(LH)	0.0010	0.6052
B1	!A1&!A2&B2	0.0100	ZN(HL)	0.0010	0.1655
B1	!A1&A2&B2	0.0100	ZN(HL)	0.0010	0.1458
B1	A1&!A2&B2	0.0100	ZN(HL)	0.0010	0.1460
A1	A2&!B1&!B2	0.0100	ZN(HL)	0.0010	0.0050
A1	A2&!B1&B2	0.0100	ZN(HL)	0.0010	0.0062
A1	A2&B1&!B2	0.0100	ZN(HL)	0.0010	0.0063
B2	!A1&!A2&B1	0.0100	ZN(HL)	0.0010	0.1655
B2	!A1&A2&B1	0.0100	ZN(HL)	0.0010	0.1460
B2	A1&!A2&B1	0.0100	ZN(HL)	0.0010	0.1460
A2	A1&!B1&!B2	0.0100	ZN(HL)	0.0010	0.0048
A2	A1&!B1&B2	0.0100	ZN(HL)	0.0010	0.0059
A2	A1&B1&!B2	0.0100	ZN(HL)	0.0010	0.0062
A1(LH)	!A2&!B1&!B2	0.0100	n/a	n/a	-0.0901
A1(LH)	!A2&!B1&B2	0.0100	n/a	n/a	-0.0901
A1(LH)	!A2&B1&!B2	0.0100	n/a	n/a	-0.0901
A1(LH)	!A2&B1&B2	0.0100	n/a	n/a	-0.0296
A1(LH)	A2&B1&B2	0.0100	n/a	n/a	-0.0317
B2(LH)	!A1&!A2&!B1	0.0100	n/a	n/a	-0.1191
B2(LH)	!A1&A2&!B1	0.0100	n/a	n/a	-0.1190
B2(LH)	A1&!A2&!B1	0.0100	n/a	n/a	-0.1190
B2(LH)	A1&A2&!B1	0.0100	n/a	n/a	-0.1187
B2(LH)	A1&A2&B1	0.0100	n/a	n/a	-0.0959
A2(HL)	!A1&!B1&!B2	0.0100	n/a	n/a	0.1333
A2(HL)	!A1&!B1&B2	0.0100	n/a	n/a	0.1329
A2(HL)	!A1&B1&!B2	0.0100	n/a	n/a	0.1329
A2(HL)	!A1&B1&B2	0.0100	n/a	n/a	0.0313
A2(HL)	A1&B1&B2	0.0100	n/a	n/a	0.1477
B1(HL)	!A1&!A2&!B2	0.0100	n/a	n/a	0.1340
B1(HL)	!A1&A2&!B2	0.0100	n/a	n/a	0.1340
B1(HL)	A1&!A2&!B2	0.0100	n/a	n/a	0.1340
B1(HL)	A1&A2&!B2	0.0100	n/a	n/a	0.1194
B1(HL)	A1&A2&B2	0.0100	n/a	n/a	0.1190
B2(HL)	!A1&!A2&!B1	0.0100	n/a	n/a	0.1327
B2(HL)	!A1&A2&!B1	0.0100	n/a	n/a	0.1328
B2(HL)	A1&!A2&!B1	0.0100	n/a	n/a	0.1327
B2(HL)	A1&A2&!B1	0.0100	n/a	n/a	0.1194
B2(HL)	A1&A2&B1	0.0100	n/a	n/a	0.1187
A1(HL)	!A2&!B1&!B2	0.0100	n/a	n/a	0.1347
A1(HL)	!A2&!B1&B2	0.0100	n/a	n/a	0.1344
A1(HL)	!A2&B1&!B2	0.0100	n/a	n/a	0.1344
A1(HL)	!A2&B1&B2	0.0100	n/a	n/a	0.0312
A1(HL)	A2&B1&B2	0.0100	n/a	n/a	0.1476
B1(LH)	!A1&!A2&!B2	0.0100	n/a	n/a	-0.0901
B1(LH)	!A1&A2&!B2	0.0100	n/a	n/a	-0.0900
B1(LH)	A1&!A2&!B2	0.0100	n/a	n/a	-0.0900
B1(LH)	A1&A2&!B2	0.0100	n/a	n/a	-0.1188

continues on next page

Table 167 – continued from previous page

B1(LH)	A1&A2&B2	0.0100	n/a	n/a	-0.0961
A2(LH)	!A1&!B1&!B2	0.0100	n/a	n/a	-0.1201
A2(LH)	!A1&!B1&B2	0.0100	n/a	n/a	-0.1199
A2(LH)	!A1&B1&!B2	0.0100	n/a	n/a	-0.1199
A2(LH)	!A1&B1&B2	0.0100	n/a	n/a	-0.0296
A2(LH)	A1&B1&B2	0.0100	n/a	n/a	-0.0316

LEAKAGE POWER

When Condition	Power (nW)
!A1&!A2&!B1&!B2	0.1510
!A1&!A2&!B1&B2	0.1517
!A1&!A2&B1&!B2	0.2312
!A1&A2&!B1&!B2	0.1517
!A1&A2&!B1&B2	0.1523
!A1&A2&B1&!B2	0.2319
A1&!A2&!B1&!B2	0.2312
A1&!A2&!B1&B2	0.2319
A1&!A2&B1&!B2	0.3114
!A1&!A2&B1&B2	0.2993
!A1&A2&B1&B2	0.3049
A1&!A2&B1&B2	0.3049
A1&A2&!B1&!B2	0.1574
A1&A2&!B1&B2	0.1574
A1&A2&B1&!B2	0.1574
A1&A2&B1&B2	0.1573

gf180mcu_fd_sc_mcu9t5v0__aoi22_4

gf180mcu_fd_sc_mcu9t5v0__aoi22_4 symbol

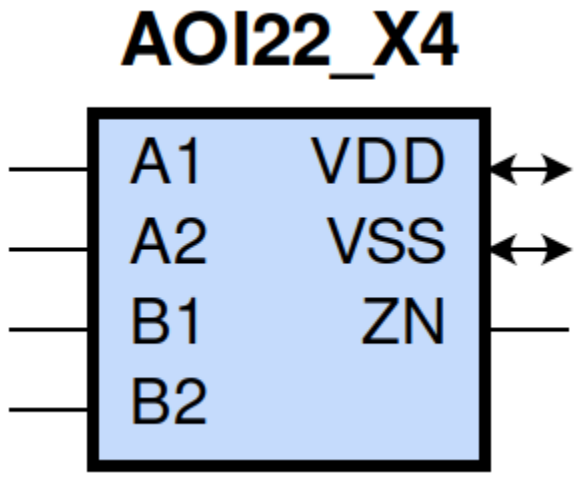

gf180mcu_fd_sc_mcu9t5v0__aoi22_4 schematic

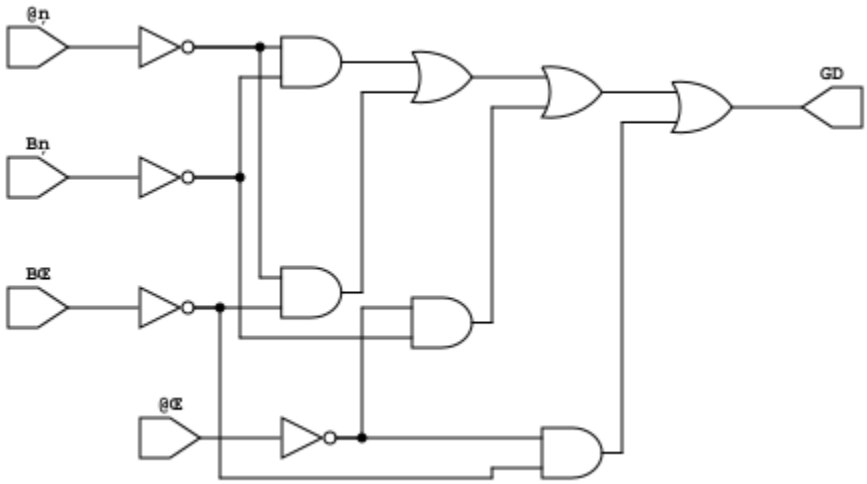

gf180mcu_fd_sc_mcu9t5v0__aoi22_4 layout

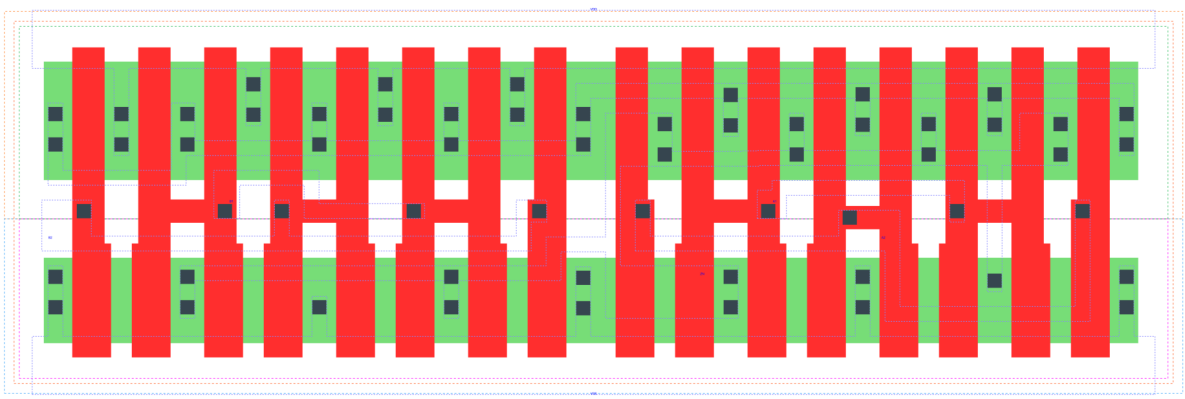

AOI22_X4 is a two 2-input AND into 2-input NOR with 4X drive strength

Attributes

Attribute	Value
area	87.494400 μm^2

OUTPUT FUNCTIONS

Output Pin	Function
ZN	(((!A1)&(!B1))|((!A1)&(!B2))|((!A2)&(!B1))|((!A2)&(!B2)))

TRUTH TABLE FOR ZN

A1	A2	B1	B2	ZN
0	?	0	?	1
0	?	?	0	1
?	0	0	?	1
?	0	?	0	1
1	1	?	?	0
?	?	1	1	0

FUNCTIONAL SCHEMATIC

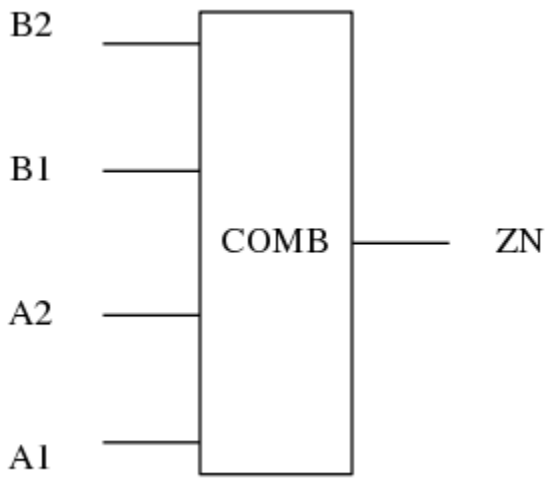

PIN CAPACITANCE (pf)

Pin	Type	Capacitance (pf)
B2	input	0.0276
B1	input	0.0269
A2	input	0.0286
A1	input	0.0278

DELAY AND OUTPUT TRANSITION TIME corresponding to min slew and load

Input Pin	Output	When Condition	Tin (ns)	Out Load (pf)	Delay (ns)	Tout (ns)
B2(HL)	ZN(LH)	!A1&!A2&B1	0.0100	0.0010	0.1427	0.0912
B2(HL)	ZN(LH)	!A1&A2&B1	0.0100	0.0010	0.1714	0.0992
B2(HL)	ZN(LH)	A1&!A2&B1	0.0100	0.0010	0.2109	0.1286
B2(LH)	ZN(HL)	!A1&!A2&B1	0.0100	0.0010	0.1126	0.0623
B2(LH)	ZN(HL)	!A1&A2&B1	0.0100	0.0010	0.0909	0.0530
B2(LH)	ZN(HL)	A1&!A2&B1	0.0100	0.0010	0.1001	0.0734
B1(HL)	ZN(LH)	!A1&!A2&B2	0.0100	0.0010	0.1154	0.0690
B1(HL)	ZN(LH)	!A1&A2&B2	0.0100	0.0010	0.1354	0.0701
B1(HL)	ZN(LH)	A1&!A2&B2	0.0100	0.0010	0.1783	0.0989
B1(LH)	ZN(HL)	!A1&!A2&B2	0.0100	0.0010	0.1013	0.0624
B1(LH)	ZN(HL)	!A1&A2&B2	0.0100	0.0010	0.0795	0.0536
B1(LH)	ZN(HL)	A1&!A2&B2	0.0100	0.0010	0.0886	0.0738
A2(HL)	ZN(LH)	A1&!B1&!B2	0.0100	0.0010	0.0951	0.0707
A2(HL)	ZN(LH)	A1&!B1&B2	0.0100	0.0010	0.1171	0.0968
A2(HL)	ZN(LH)	A1&B1&!B2	0.0100	0.0010	0.1565	0.1275
A2(LH)	ZN(HL)	A1&!B1&!B2	0.0100	0.0010	0.0637	0.0285
A2(LH)	ZN(HL)	A1&!B1&B2	0.0100	0.0010	0.0639	0.0285
A2(LH)	ZN(HL)	A1&B1&!B2	0.0100	0.0010	0.0684	0.0444
A1(HL)	ZN(LH)	A2&!B1&!B2	0.0100	0.0010	0.0701	0.0478
A1(HL)	ZN(LH)	A2&!B1&B2	0.0100	0.0010	0.0839	0.0657
A1(HL)	ZN(LH)	A2&B1&!B2	0.0100	0.0010	0.1243	0.0972
A1(LH)	ZN(HL)	A2&!B1&!B2	0.0100	0.0010	0.0524	0.0286
A1(LH)	ZN(HL)	A2&!B1&B2	0.0100	0.0010	0.0526	0.0285
A1(LH)	ZN(HL)	A2&B1&!B2	0.0100	0.0010	0.0570	0.0445

DYNAMIC ENERGY

Input Pin	When Condition	Tin (ns)	Output	Out Load (pf)	Energy (uW/MHz)
A1	A2&!B1&!B2	0.0100	ZN(LH)	0.0010	0.7131
A1	A2&!B1&B2	0.0100	ZN(LH)	0.0010	0.7124
A1	A2&B1&!B2	0.0100	ZN(LH)	0.0010	0.9835
B2	!A1&!A2&B1	0.0100	ZN(LH)	0.0010	1.4062
B2	!A1&A2&B1	0.0100	ZN(LH)	0.0010	1.2731
B2	A1&!A2&B1	0.0100	ZN(LH)	0.0010	1.5329
B1	!A1&!A2&B2	0.0100	ZN(LH)	0.0010	1.1627
B1	!A1&A2&B2	0.0100	ZN(LH)	0.0010	1.0291
B1	A1&!A2&B2	0.0100	ZN(LH)	0.0010	1.3050
A2	A1&!B1&!B2	0.0100	ZN(LH)	0.0010	0.9491
A2	A1&!B1&B2	0.0100	ZN(LH)	0.0010	0.9492
A2	A1&B1&!B2	0.0100	ZN(LH)	0.0010	1.2098
B1	!A1&!A2&B2	0.0100	ZN(HL)	0.0010	0.3199
B1	!A1&A2&B2	0.0100	ZN(HL)	0.0010	0.2805

continues on next page

Table 168 – continued from previous page

B1	A1&!A2&B2	0.0100	ZN(HL)	0.0010	0.2807
A1	A2&!B1&!B2	0.0100	ZN(HL)	0.0010	0.0092
A1	A2&!B1&B2	0.0100	ZN(HL)	0.0010	0.0118
A1	A2&B1&!B2	0.0100	ZN(HL)	0.0010	0.0121
B2	!A1&!A2&B1	0.0100	ZN(HL)	0.0010	0.3198
B2	!A1&A2&B1	0.0100	ZN(HL)	0.0010	0.2805
B2	A1&!A2&B1	0.0100	ZN(HL)	0.0010	0.2806
A2	A1&!B1&!B2	0.0100	ZN(HL)	0.0010	0.0089
A2	A1&!B1&B2	0.0100	ZN(HL)	0.0010	0.0113
A2	A1&B1&!B2	0.0100	ZN(HL)	0.0010	0.0116
A1(LH)	!A2&!B1&!B2	0.0100	n/a	n/a	-0.1801
A1(LH)	!A2&!B1&B2	0.0100	n/a	n/a	-0.1801
A1(LH)	!A2&B1&!B2	0.0100	n/a	n/a	-0.1801
A1(LH)	!A2&B1&B2	0.0100	n/a	n/a	-0.0583
A1(LH)	A2&B1&B2	0.0100	n/a	n/a	-0.0623
B2(LH)	!A1&!A2&!B1	0.0100	n/a	n/a	-0.2383
B2(LH)	!A1&A2&!B1	0.0100	n/a	n/a	-0.2380
B2(LH)	A1&!A2&!B1	0.0100	n/a	n/a	-0.2380
B2(LH)	A1&A2&!B1	0.0100	n/a	n/a	-0.2376
B2(LH)	A1&A2&B1	0.0100	n/a	n/a	-0.1902
A2(HL)	!A1&!B1&!B2	0.0100	n/a	n/a	0.2666
A2(HL)	!A1&!B1&B2	0.0100	n/a	n/a	0.2659
A2(HL)	!A1&B1&!B2	0.0100	n/a	n/a	0.2659
A2(HL)	!A1&B1&B2	0.0100	n/a	n/a	0.0618
A2(HL)	A1&B1&B2	0.0100	n/a	n/a	0.2857
B1(HL)	!A1&!A2&!B2	0.0100	n/a	n/a	0.2679
B1(HL)	!A1&A2&!B2	0.0100	n/a	n/a	0.2679
B1(HL)	A1&!A2&!B2	0.0100	n/a	n/a	0.2678
B1(HL)	A1&A2&!B2	0.0100	n/a	n/a	0.2388
B1(HL)	A1&A2&B2	0.0100	n/a	n/a	0.2370
B2(HL)	!A1&!A2&!B1	0.0100	n/a	n/a	0.2658
B2(HL)	!A1&A2&!B1	0.0100	n/a	n/a	0.2659
B2(HL)	A1&!A2&!B1	0.0100	n/a	n/a	0.2659
B2(HL)	A1&A2&!B1	0.0100	n/a	n/a	0.2388
B2(HL)	A1&A2&B1	0.0100	n/a	n/a	0.2370
A1(HL)	!A2&!B1&!B2	0.0100	n/a	n/a	0.2692
A1(HL)	!A2&!B1&B2	0.0100	n/a	n/a	0.2689
A1(HL)	!A2&B1&!B2	0.0100	n/a	n/a	0.2689
A1(HL)	!A2&B1&B2	0.0100	n/a	n/a	0.0617
A1(HL)	A2&B1&B2	0.0100	n/a	n/a	0.2854
B1(LH)	!A1&!A2&!B2	0.0100	n/a	n/a	-0.1782
B1(LH)	!A1&A2&!B2	0.0100	n/a	n/a	-0.1780
B1(LH)	A1&!A2&!B2	0.0100	n/a	n/a	-0.1780
B1(LH)	A1&A2&!B2	0.0100	n/a	n/a	-0.2375
B1(LH)	A1&A2&B2	0.0100	n/a	n/a	-0.1902
A2(LH)	!A1&!B1&!B2	0.0100	n/a	n/a	-0.2397
A2(LH)	!A1&!B1&B2	0.0100	n/a	n/a	-0.2395
A2(LH)	!A1&B1&!B2	0.0100	n/a	n/a	-0.2395
A2(LH)	!A1&B1&B2	0.0100	n/a	n/a	-0.0585
A2(LH)	A1&B1&B2	0.0100	n/a	n/a	-0.0625

LEAKAGE POWER

When Condition	Power (nW)
!A1&!A2&!B1&!B2	0.2520
!A1&!A2&!B1&B2	0.2534
!A1&!A2&B1&!B2	0.4124
!A1&A2&!B1&!B2	0.2534
!A1&A2&!B1&B2	0.2547
!A1&A2&B1&!B2	0.4137
A1&!A2&!B1&!B2	0.4124
A1&!A2&!B1&B2	0.4137
A1&!A2&B1&!B2	0.5728
!A1&!A2&B1&B2	0.5487
!A1&A2&B1&B2	0.5599
A1&!A2&B1&B2	0.5599
A1&A2&!B1&!B2	0.2649
A1&A2&!B1&B2	0.2649
A1&A2&B1&!B2	0.2649
A1&A2&B1&B2	0.2641

gf180mcu_fd_sc_mcu9t5v0__aoi221_1

gf180mcu_fd_sc_mcu9t5v0__aoi221_1 symbol

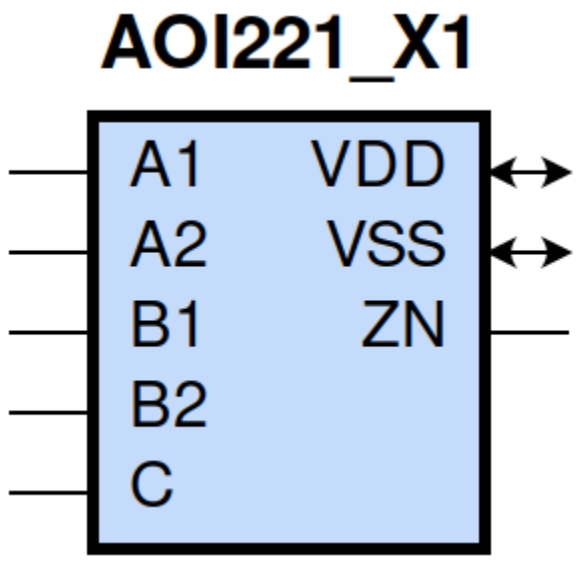

gf180mcu_fd_sc_mcu9t5v0__aoi221_1 schematic

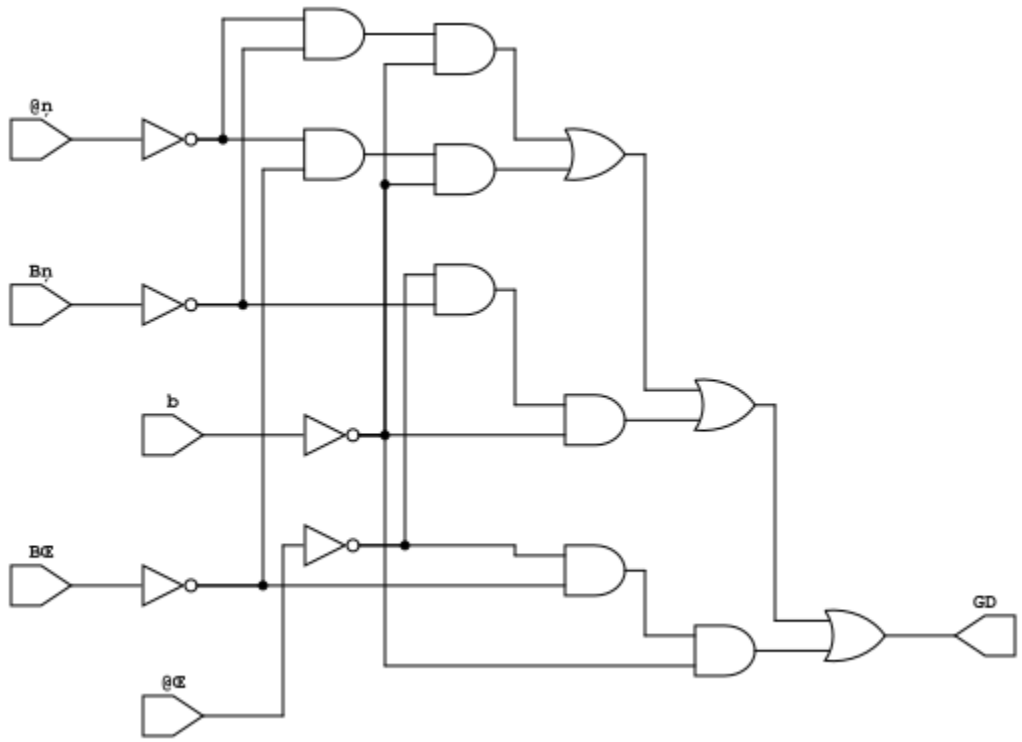

gf180mcu_fd_sc_mcu9t5v0__aoi221_1 layout

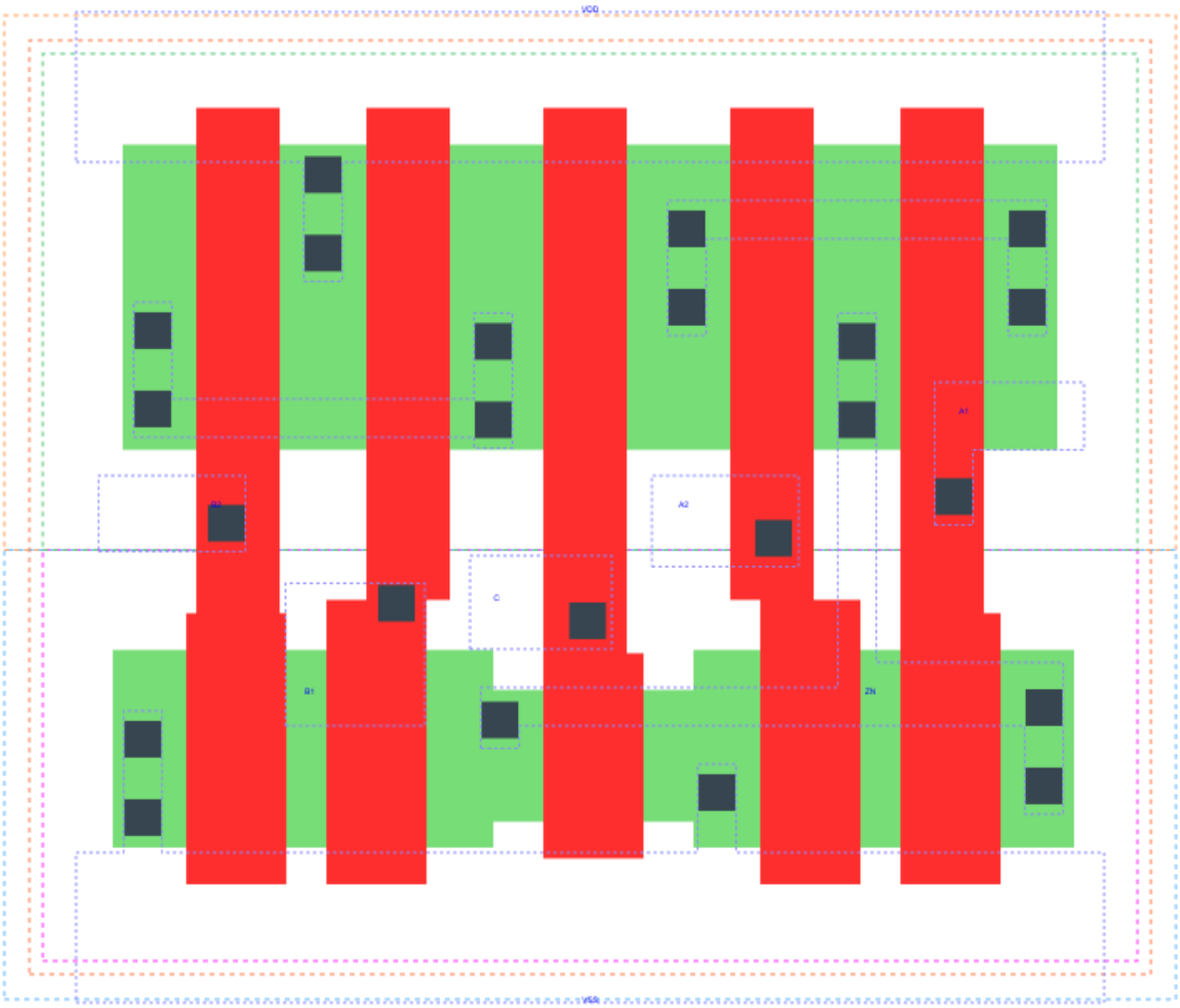

AOI221_X1 is a two 2-input AND into 3-input NOR with 1X drive strength

Attributes

Attribute	Value
area	31.046400 μm^2

OUTPUT FUNCTIONS

Output Pin	Function
ZN	(((!A1)&(!B1)&(!C))|((!A1)&(!B2)&(!C))|((!A2)&(!B1)&(!C))|((!A2)&(!B2)&(!C)))

TRUTH TABLE FOR ZN

A1	A2	B1	B2	C	ZN
0	?	0	?	0	1
0	?	?	0	0	1
?	0	0	?	0	1
?	0	?	0	0	1
1	1	?	?	?	0
?	?	1	1	?	0
?	?	?	?	1	0

FUNCTIONAL SCHEMATIC

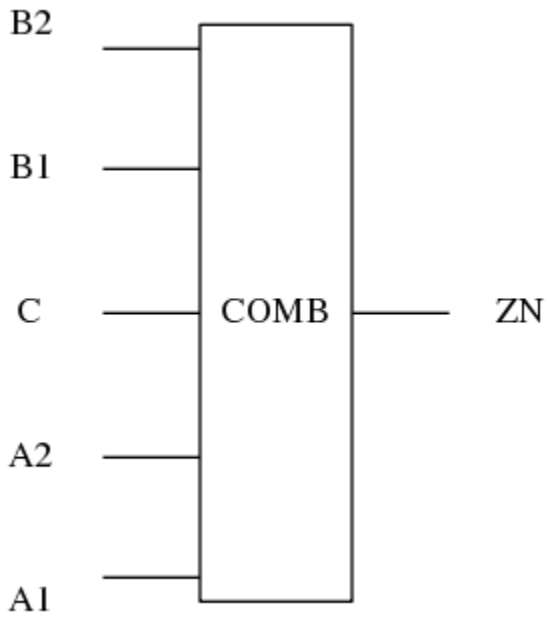

PIN CAPACITANCE (pf)

Pin	Type	Capacitance (pf)
B2	input	0.0064
B1	input	0.0065
C	input	0.0057
A2	input	0.0067
A1	input	0.0068

DELAY AND OUTPUT TRANSITION TIME corresponding to min slew and load

Input Pin	Output	When Condition	Tin (ns)	Out Load (pf)	Delay (ns)	Tout (ns)
B2(HL)	ZN(LH)	!A1&!A2&B1&!C	0.0100	0.0010	0.2702	0.1786
B2(HL)	ZN(LH)	!A1&A2&B1&!C	0.0100	0.0010	0.3024	0.1768
B2(HL)	ZN(LH)	A1&!A2&B1&!C	0.0100	0.0010	0.3527	0.2152
B2(LH)	ZN(HL)	!A1&!A2&B1&!C	0.0100	0.0010	0.1498	0.0957
B2(LH)	ZN(HL)	!A1&A2&B1&!C	0.0100	0.0010	0.1176	0.0827
B2(LH)	ZN(HL)	A1&!A2&B1&!C	0.0100	0.0010	0.1298	0.1046
B1(HL)	ZN(LH)	!A1&!A2&B2&!C	0.0100	0.0010	0.2346	0.1461
B1(HL)	ZN(LH)	!A1&A2&B2&!C	0.0100	0.0010	0.2601	0.1379
B1(HL)	ZN(LH)	A1&!A2&B2&!C	0.0100	0.0010	0.3128	0.1763
B1(LH)	ZN(HL)	!A1&!A2&B2&!C	0.0100	0.0010	0.1389	0.0960
B1(LH)	ZN(HL)	!A1&A2&B2&!C	0.0100	0.0010	0.1064	0.0832
B1(LH)	ZN(HL)	A1&!A2&B2&!C	0.0100	0.0010	0.1186	0.1052
C(HL)	ZN(LH)	!A1&!A2&!B1&!B2	0.0100	0.0010	0.1522	0.1103
C(HL)	ZN(LH)	!A1&!A2&!B1&B2	0.0100	0.0010	0.1833	0.1460
C(HL)	ZN(LH)	!A1&!A2&B1&!B2	0.0100	0.0010	0.2263	0.1784
C(HL)	ZN(LH)	!A1&A2&!B1&!B2	0.0100	0.0010	0.1752	0.1101
C(HL)	ZN(LH)	!A1&A2&!B1&B2	0.0100	0.0010	0.2069	0.1382
C(HL)	ZN(LH)	!A1&A2&B1&!B2	0.0100	0.0010	0.2580	0.1766
C(HL)	ZN(LH)	A1&!A2&!B1&!B2	0.0100	0.0010	0.2176	0.1418
C(HL)	ZN(LH)	A1&!A2&!B1&B2	0.0100	0.0010	0.2578	0.1764
C(HL)	ZN(LH)	A1&!A2&B1&!B2	0.0100	0.0010	0.3087	0.2151
C(LH)	ZN(HL)	!A1&!A2&!B1&!B2	0.0100	0.0010	0.1173	0.0702
C(LH)	ZN(HL)	!A1&!A2&!B1&B2	0.0100	0.0010	0.1178	0.0702
C(LH)	ZN(HL)	!A1&!A2&B1&!B2	0.0100	0.0010	0.1267	0.0876
C(LH)	ZN(HL)	!A1&A2&!B1&!B2	0.0100	0.0010	0.0966	0.0610
C(LH)	ZN(HL)	!A1&A2&!B1&B2	0.0100	0.0010	0.0971	0.0610
C(LH)	ZN(HL)	!A1&A2&B1&!B2	0.0100	0.0010	0.1059	0.0787
C(LH)	ZN(HL)	A1&!A2&!B1&!B2	0.0100	0.0010	0.1055	0.0787
C(LH)	ZN(HL)	A1&!A2&!B1&B2	0.0100	0.0010	0.1059	0.0788
C(LH)	ZN(HL)	A1&!A2&B1&!B2	0.0100	0.0010	0.1163	0.0963
A2(HL)	ZN(LH)	A1&!B1&!B2&!C	0.0100	0.0010	0.1530	0.1388
A2(HL)	ZN(LH)	A1&!B1&B2&!C	0.0100	0.0010	0.1685	0.1696
A2(HL)	ZN(LH)	A1&B1&!B2&!C	0.0100	0.0010	0.2184	0.2114
A2(LH)	ZN(HL)	A1&!B1&!B2&!C	0.0100	0.0010	0.0790	0.0404
A2(LH)	ZN(HL)	A1&!B1&B2&!C	0.0100	0.0010	0.0790	0.0404
A2(LH)	ZN(HL)	A1&B1&!B2&!C	0.0100	0.0010	0.0842	0.0561
A1(HL)	ZN(LH)	A2&!B1&!B2&!C	0.0100	0.0010	0.1195	0.1051

continues on next page

Table 169 – continued from previous page

A1(HL)	ZN(LH)	A2&!B1&B2&!C	0.0100	0.0010	0.1290	0.1272
A1(HL)	ZN(LH)	A2&B1&!B2&!C	0.0100	0.0010	0.1792	0.1706
A1(LH)	ZN(HL)	A2&!B1&!B2&!C	0.0100	0.0010	0.0682	0.0405
A1(LH)	ZN(HL)	A2&!B1&B2&!C	0.0100	0.0010	0.0682	0.0405
A1(LH)	ZN(HL)	A2&B1&!B2&!C	0.0100	0.0010	0.0733	0.0561

DYNAMIC ENERGY

Input Pin	When Condition	Tin (ns)	Output	Out Load (pf)	Energy (uW/MHz)
C	!A1&!A2&!B1&!B2	0.0100	ZN(LH)	0.0010	0.2921
C	!A1&!A2&!B1&B2	0.0100	ZN(LH)	0.0010	0.2921
C	!A1&!A2&B1&!B2	0.0100	ZN(LH)	0.0010	0.3494
C	!A1&A2&!B1&!B2	0.0100	ZN(LH)	0.0010	0.2589
C	!A1&A2&!B1&B2	0.0100	ZN(LH)	0.0010	0.2589
C	!A1&A2&B1&!B2	0.0100	ZN(LH)	0.0010	0.3163
C	A1&!A2&!B1&!B2	0.0100	ZN(LH)	0.0010	0.3162
C	A1&!A2&!B1&B2	0.0100	ZN(LH)	0.0010	0.3162
C	A1&!A2&B1&!B2	0.0100	ZN(LH)	0.0010	0.3732
C	!A1&!A2&!B1&!B2	0.0100	ZN(HL)	0.0010	0.0739
C	!A1&!A2&!B1&B2	0.0100	ZN(HL)	0.0010	0.0748
C	!A1&!A2&B1&!B2	0.0100	ZN(HL)	0.0010	0.0748
C	!A1&A2&!B1&!B2	0.0100	ZN(HL)	0.0010	0.0639
C	!A1&A2&!B1&B2	0.0100	ZN(HL)	0.0010	0.0648
C	!A1&A2&B1&!B2	0.0100	ZN(HL)	0.0010	0.0648
C	A1&!A2&!B1&!B2	0.0100	ZN(HL)	0.0010	0.0640
C	A1&!A2&!B1&B2	0.0100	ZN(HL)	0.0010	0.0648
C	A1&!A2&B1&!B2	0.0100	ZN(HL)	0.0010	0.0648
A1	A2&!B1&!B2&!C	0.0100	ZN(LH)	0.0010	0.2035
A1	A2&!B1&B2&!C	0.0100	ZN(LH)	0.0010	0.2036
A1	A2&B1&!B2&!C	0.0100	ZN(LH)	0.0010	0.2619
B2	!A1&!A2&B1&!C	0.0100	ZN(LH)	0.0010	0.4145
B2	!A1&A2&B1&!C	0.0100	ZN(LH)	0.0010	0.3815
B2	A1&!A2&B1&!C	0.0100	ZN(LH)	0.0010	0.4382
B1	!A1&!A2&B2&!C	0.0100	ZN(LH)	0.0010	0.3642
B1	!A1&A2&B2&!C	0.0100	ZN(LH)	0.0010	0.3309
B1	A1&!A2&B2&!C	0.0100	ZN(LH)	0.0010	0.3899
A2	A1&!B1&!B2&!C	0.0100	ZN(LH)	0.0010	0.2531
A2	A1&!B1&B2&!C	0.0100	ZN(LH)	0.0010	0.2532
A2	A1&B1&!B2&!C	0.0100	ZN(LH)	0.0010	0.3101
B1	!A1&!A2&B2&!C	0.0100	ZN(HL)	0.0010	0.1287
B1	!A1&A2&B2&!C	0.0100	ZN(HL)	0.0010	0.1194
B1	A1&!A2&B2&!C	0.0100	ZN(HL)	0.0010	0.1194
A1	A2&!B1&!B2&!C	0.0100	ZN(HL)	0.0010	0.0043
A1	A2&!B1&B2&!C	0.0100	ZN(HL)	0.0010	0.0043
A1	A2&B1&!B2&!C	0.0100	ZN(HL)	0.0010	0.0042
B2	!A1&!A2&B1&!C	0.0100	ZN(HL)	0.0010	0.1287
B2	!A1&A2&B1&!C	0.0100	ZN(HL)	0.0010	0.1193

continues on next page

Table 170 – continued from previous page

B2	A1&!A2&B1&!C	0.0100	ZN(HL)	0.0010	0.1193
A2	A1&!B1&!B2&!C	0.0100	ZN(HL)	0.0010	0.0042
A2	A1&!B1&B2&!C	0.0100	ZN(HL)	0.0010	0.0042
A2	A1&B1&!B2&!C	0.0100	ZN(HL)	0.0010	0.0042
A1(LH)	!A2&!B1&!B2&!C	0.0100	n/a	n/a	-0.0480
A1(LH)	!A2&!B1&B2&!C	0.0100	n/a	n/a	-0.0480
A1(LH)	!A2&B1&!B2&!C	0.0100	n/a	n/a	-0.0480
A1(LH)	!A2&!B1&!B2&C	0.0100	n/a	n/a	-0.0143
A1(LH)	!A2&!B1&B2&C	0.0100	n/a	n/a	-0.0143
A1(LH)	!A2&B1&!B2&C	0.0100	n/a	n/a	-0.0143
A1(LH)	!A2&B1&B2&!C	0.0100	n/a	n/a	-0.0144
A1(LH)	!A2&B1&B2&C	0.0100	n/a	n/a	-0.0143
A1(LH)	A2&!B1&!B2&C	0.0100	n/a	n/a	-0.0161
A1(LH)	A2&!B1&B2&C	0.0100	n/a	n/a	-0.0161
A1(LH)	A2&B1&!B2&C	0.0100	n/a	n/a	-0.0161
A1(LH)	A2&B1&B2&!C	0.0100	n/a	n/a	-0.0160
A1(LH)	A2&B1&B2&C	0.0100	n/a	n/a	-0.0161
C(HL)	!A1&!A2&B1&B2	0.0100	n/a	n/a	0.0575
C(HL)	!A1&A2&B1&B2	0.0100	n/a	n/a	0.0573
C(HL)	A1&!A2&B1&B2	0.0100	n/a	n/a	0.0573
C(HL)	A1&A2&!B1&!B2	0.0100	n/a	n/a	0.0598
C(HL)	A1&A2&!B1&B2	0.0100	n/a	n/a	0.0598
C(HL)	A1&A2&B1&!B2	0.0100	n/a	n/a	0.0597
C(HL)	A1&A2&B1&B2	0.0100	n/a	n/a	0.0358
B2(LH)	!A1&!A2&!B1&!C	0.0100	n/a	n/a	-0.0596
B2(LH)	!A1&A2&!B1&!C	0.0100	n/a	n/a	-0.0595
B2(LH)	A1&!A2&!B1&!C	0.0100	n/a	n/a	-0.0595
B2(LH)	!A1&!A2&!B1&C	0.0100	n/a	n/a	-0.0593
B2(LH)	!A1&!A2&B1&C	0.0100	n/a	n/a	-0.0525
B2(LH)	!A1&A2&!B1&C	0.0100	n/a	n/a	-0.0593
B2(LH)	!A1&A2&B1&C	0.0100	n/a	n/a	-0.0525
B2(LH)	A1&!A2&!B1&C	0.0100	n/a	n/a	-0.0593
B2(LH)	A1&!A2&B1&C	0.0100	n/a	n/a	-0.0525
B2(LH)	A1&A2&!B1&!C	0.0100	n/a	n/a	-0.0593
B2(LH)	A1&A2&!B1&C	0.0100	n/a	n/a	-0.0593
B2(LH)	A1&A2&B1&!C	0.0100	n/a	n/a	-0.0497
B2(LH)	A1&A2&B1&C	0.0100	n/a	n/a	-0.0540
A2(HL)	!A1&!B1&!B2&!C	0.0100	n/a	n/a	0.0657
A2(HL)	!A1&!B1&B2&!C	0.0100	n/a	n/a	0.0657
A2(HL)	!A1&B1&!B2&!C	0.0100	n/a	n/a	0.0657
A2(HL)	!A1&!B1&!B2&C	0.0100	n/a	n/a	0.0159
A2(HL)	!A1&!B1&B2&C	0.0100	n/a	n/a	0.0159
A2(HL)	!A1&B1&!B2&C	0.0100	n/a	n/a	0.0159
A2(HL)	!A1&B1&B2&!C	0.0100	n/a	n/a	0.0158
A2(HL)	!A1&B1&B2&C	0.0100	n/a	n/a	0.0159
A2(HL)	A1&!B1&!B2&C	0.0100	n/a	n/a	0.0628
A2(HL)	A1&!B1&B2&C	0.0100	n/a	n/a	0.0628
A2(HL)	A1&B1&!B2&C	0.0100	n/a	n/a	0.0628
A2(HL)	A1&B1&B2&!C	0.0100	n/a	n/a	0.1204
A2(HL)	A1&B1&B2&C	0.0100	n/a	n/a	0.0628
B1(HL)	!A1&!A2&!B2&!C	0.0100	n/a	n/a	0.0664
B1(HL)	!A1&A2&!B2&!C	0.0100	n/a	n/a	0.0664

continues on next page

Table 170 – continued from previous page

B1(HL)	A1&!A2&!B2&!C	0.0100	n/a	n/a	0.0664
B1(HL)	!A1&!A2&!B2&C	0.0100	n/a	n/a	0.0597
B1(HL)	!A1&!A2&B2&C	0.0100	n/a	n/a	0.0596
B1(HL)	!A1&A2&!B2&C	0.0100	n/a	n/a	0.0597
B1(HL)	!A1&A2&B2&C	0.0100	n/a	n/a	0.0596
B1(HL)	A1&!A2&!B2&C	0.0100	n/a	n/a	0.0596
B1(HL)	A1&!A2&B2&C	0.0100	n/a	n/a	0.0596
B1(HL)	A1&A2&!B2&!C	0.0100	n/a	n/a	0.0596
B1(HL)	A1&A2&!B2&C	0.0100	n/a	n/a	0.0597
B1(HL)	A1&A2&B2&!C	0.0100	n/a	n/a	0.0597
B1(HL)	A1&A2&B2&C	0.0100	n/a	n/a	0.0596
B2(HL)	!A1&!A2&!B1&!C	0.0100	n/a	n/a	0.0658
B2(HL)	!A1&A2&!B1&!C	0.0100	n/a	n/a	0.0658
B2(HL)	A1&!A2&!B1&!C	0.0100	n/a	n/a	0.0658
B2(HL)	!A1&!A2&!B1&C	0.0100	n/a	n/a	0.0598
B2(HL)	!A1&!A2&B1&C	0.0100	n/a	n/a	0.0597
B2(HL)	!A1&A2&!B1&C	0.0100	n/a	n/a	0.0598
B2(HL)	!A1&A2&B1&C	0.0100	n/a	n/a	0.0597
B2(HL)	A1&!A2&!B1&C	0.0100	n/a	n/a	0.0598
B2(HL)	A1&!A2&B1&C	0.0100	n/a	n/a	0.0597
B2(HL)	A1&A2&!B1&!C	0.0100	n/a	n/a	0.0598
B2(HL)	A1&A2&!B1&C	0.0100	n/a	n/a	0.0598
B2(HL)	A1&A2&B1&!C	0.0100	n/a	n/a	0.0598
B2(HL)	A1&A2&B1&C	0.0100	n/a	n/a	0.0597
A1(HL)	!A2&!B1&!B2&!C	0.0100	n/a	n/a	0.0666
A1(HL)	!A2&!B1&B2&!C	0.0100	n/a	n/a	0.0666
A1(HL)	!A2&B1&!B2&!C	0.0100	n/a	n/a	0.0666
A1(HL)	!A2&!B1&!B2&C	0.0100	n/a	n/a	0.0159
A1(HL)	!A2&!B1&B2&C	0.0100	n/a	n/a	0.0159
A1(HL)	!A2&B1&!B2&C	0.0100	n/a	n/a	0.0159
A1(HL)	!A2&B1&B2&!C	0.0100	n/a	n/a	0.0158
A1(HL)	!A2&B1&B2&C	0.0100	n/a	n/a	0.0159
A1(HL)	A2&!B1&!B2&C	0.0100	n/a	n/a	0.0628
A1(HL)	A2&!B1&B2&C	0.0100	n/a	n/a	0.0628
A1(HL)	A2&B1&!B2&C	0.0100	n/a	n/a	0.0628
A1(HL)	A2&B1&B2&!C	0.0100	n/a	n/a	0.1204
A1(HL)	A2&B1&B2&C	0.0100	n/a	n/a	0.0628
B1(LH)	!A1&!A2&!B2&!C	0.0100	n/a	n/a	-0.0474
B1(LH)	!A1&A2&!B2&!C	0.0100	n/a	n/a	-0.0474
B1(LH)	A1&!A2&!B2&!C	0.0100	n/a	n/a	-0.0474
B1(LH)	!A1&!A2&!B2&C	0.0100	n/a	n/a	-0.0593
B1(LH)	!A1&!A2&B2&C	0.0100	n/a	n/a	-0.0525
B1(LH)	!A1&A2&!B2&C	0.0100	n/a	n/a	-0.0593
B1(LH)	!A1&A2&B2&C	0.0100	n/a	n/a	-0.0525
B1(LH)	A1&!A2&!B2&C	0.0100	n/a	n/a	-0.0593
B1(LH)	A1&!A2&B2&C	0.0100	n/a	n/a	-0.0525
B1(LH)	A1&A2&!B2&!C	0.0100	n/a	n/a	-0.0593
B1(LH)	A1&A2&!B2&C	0.0100	n/a	n/a	-0.0593
B1(LH)	A1&A2&B2&!C	0.0100	n/a	n/a	-0.0497
B1(LH)	A1&A2&B2&C	0.0100	n/a	n/a	-0.0540
C(LH)	!A1&!A2&B1&B2	0.0100	n/a	n/a	-0.0183
C(LH)	!A1&A2&B1&B2	0.0100	n/a	n/a	-0.0184

continues on next page

Table 170 – continued from previous page

C(LH)	A1&!A2&B1&B2	0.0100	n/a	n/a	-0.0184
C(LH)	A1&A2&!B1&!B2	0.0100	n/a	n/a	-0.0451
C(LH)	A1&A2&!B1&B2	0.0100	n/a	n/a	-0.0445
C(LH)	A1&A2&B1&!B2	0.0100	n/a	n/a	-0.0445
C(LH)	A1&A2&B1&B2	0.0100	n/a	n/a	-0.0354
A2(LH)	!A1&!B1&!B2&!C	0.0100	n/a	n/a	-0.0601
A2(LH)	!A1&!B1&B2&!C	0.0100	n/a	n/a	-0.0601
A2(LH)	!A1&B1&!B2&!C	0.0100	n/a	n/a	-0.0601
A2(LH)	!A1&!B1&!B2&C	0.0100	n/a	n/a	-0.0143
A2(LH)	!A1&!B1&B2&C	0.0100	n/a	n/a	-0.0143
A2(LH)	!A1&B1&!B2&C	0.0100	n/a	n/a	-0.0143
A2(LH)	!A1&B1&B2&!C	0.0100	n/a	n/a	-0.0145
A2(LH)	!A1&B1&B2&C	0.0100	n/a	n/a	-0.0143
A2(LH)	A1&!B1&!B2&C	0.0100	n/a	n/a	-0.0161
A2(LH)	A1&!B1&B2&C	0.0100	n/a	n/a	-0.0161
A2(LH)	A1&B1&!B2&C	0.0100	n/a	n/a	-0.0161
A2(LH)	A1&B1&B2&!C	0.0100	n/a	n/a	-0.0160
A2(LH)	A1&B1&B2&C	0.0100	n/a	n/a	-0.0161

LEAKAGE POWER

When Condition	Power (nW)
!A1&!A2&!B1&!B2&!C	0.1259
!A1&!A2&!B1&B2&!C	0.1262
!A1&!A2&B1&!B2&!C	0.1660
!A1&A2&!B1&!B2&!C	0.1262
!A1&A2&!B1&B2&!C	0.1265
!A1&A2&B1&!B2&!C	0.1663
A1&!A2&!B1&!B2&!C	0.1660
A1&!A2&!B1&B2&!C	0.1663
A1&!A2&B1&!B2&!C	0.2061
!A1&!A2&!B1&!B2&C	0.1554
!A1&!A2&!B1&B2&C	0.1554
!A1&!A2&B1&!B2&C	0.1554
!A1&!A2&B1&B2&!C	0.2095
!A1&!A2&B1&B2&C	0.1555
!A1&A2&!B1&!B2&C	0.1583
!A1&A2&!B1&B2&C	0.1583
!A1&A2&B1&!B2&C	0.1583
!A1&A2&B1&B2&!C	0.2123
!A1&A2&B1&B2&C	0.1583
A1&!A2&!B1&!B2&C	0.1583
A1&!A2&!B1&B2&C	0.1583
A1&!A2&B1&!B2&C	0.1583
A1&!A2&B1&B2&!C	0.2123
A1&!A2&B1&B2&C	0.1583
A1&A2&!B1&!B2&!C	0.1037

continues on next page

Table 171 – continued from previous page

A1&A2&!B1&!B2&C	0.1037
A1&A2&!B1&B2&!C	0.1037
A1&A2&!B1&B2&C	0.1037
A1&A2&B1&!B2&!C	0.1037
A1&A2&B1&!B2&C	0.1037
A1&A2&B1&B2&!C	0.1038
A1&A2&B1&B2&C	0.1038

gf180mcu_fd_sc_mcu9t5v0__aoi221_2

gf180mcu_fd_sc_mcu9t5v0__aoi221_2 symbol

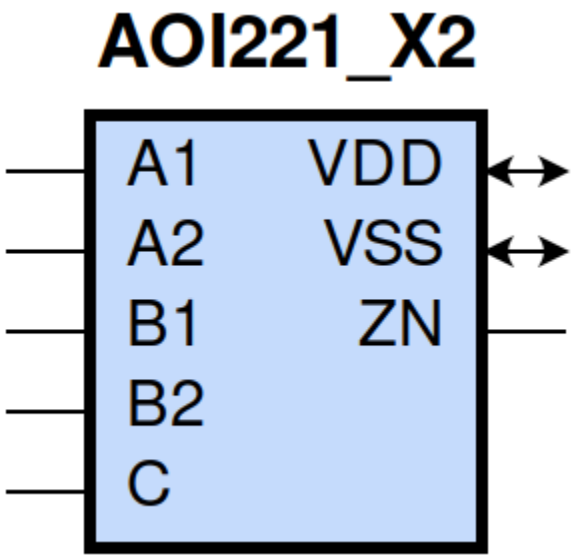

gf180mcu_fd_sc_mcu9t5v0__aoi221_2 schematic

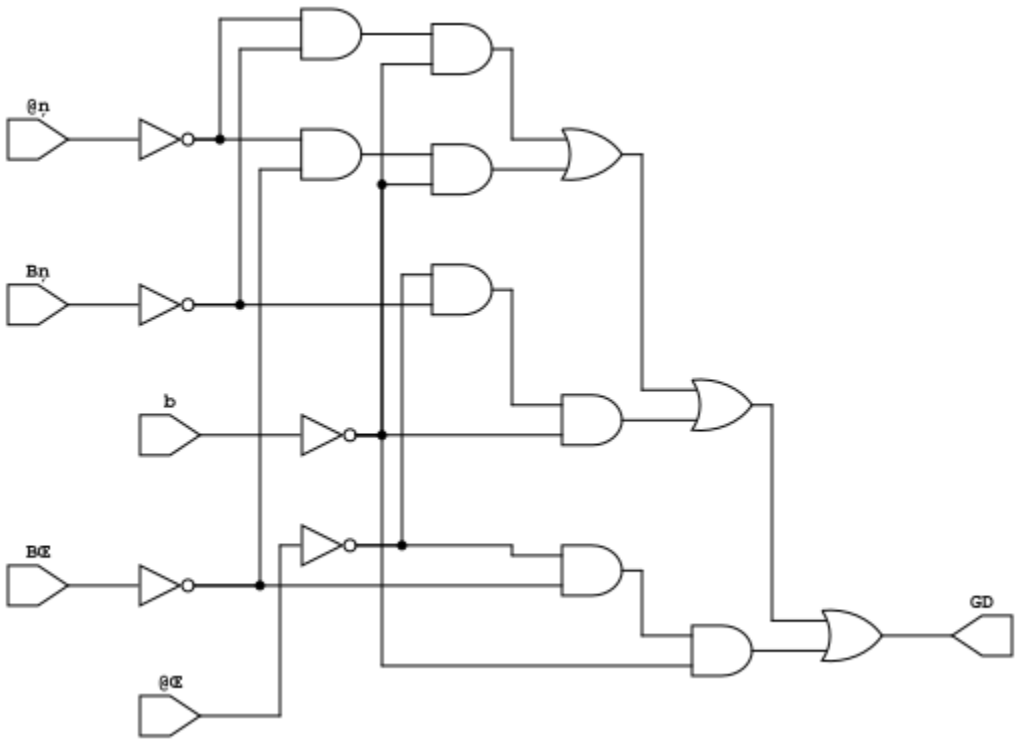

gf180mcu_fd_sc_mcu9t5v0__aoi221_2 layout

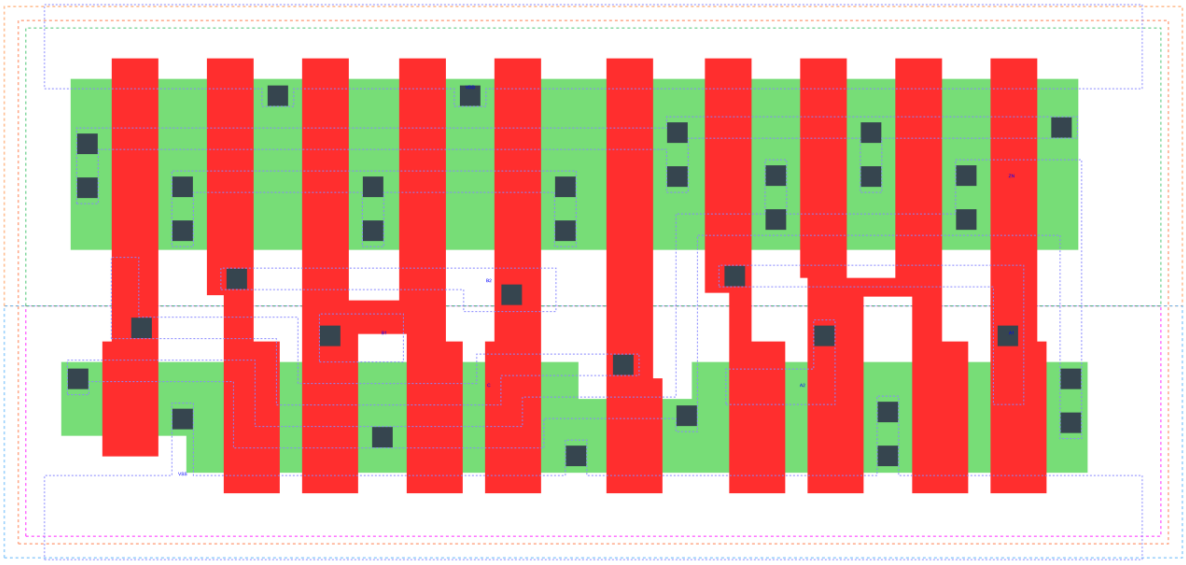

AOI221_X2 is a two 2-input AND into 3-input NOR with 2X drive strength

Attributes

Attribute	Value
area	59.270400 μm^2

OUTPUT FUNCTIONS

Output Pin	Function
ZN	(((!A1)&(!B1)&(!C))|((!A1)&(!B2)&(!C))|((!A2)&(!B1)&(!C))|((!A2)&(!B2)&(!C)))

TRUTH TABLE FOR ZN

A1	A2	B1	B2	C	ZN
0	?	0	?	0	1
0	?	?	0	0	1
?	0	0	?	0	1
?	0	?	0	0	1
1	1	?	?	?	0
?	?	1	1	?	0
?	?	?	?	1	0

FUNCTIONAL SCHEMATIC

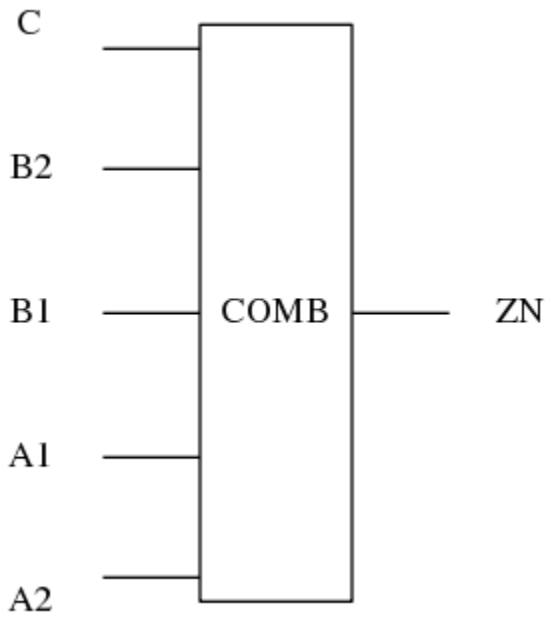

PIN CAPACITANCE (pf)

Pin	Type	Capacitance (pf)
C	input	0.0125
B2	input	0.0130
B1	input	0.0127
A1	input	0.0138
A2	input	0.0131

DELAY AND OUTPUT TRANSITION TIME corresponding to min slew and load

Input Pin	Output	When Condition	Tin (ns)	Out Load (pf)	Delay (ns)	Tout (ns)
C(HL)	ZN(LH)	!A1&!A2&!B1&!B2	0.0100	0.0010	0.1555	0.1117
C(HL)	ZN(LH)	!A1&!A2&!B1&B2	0.0100	0.0010	0.1879	0.1481
C(HL)	ZN(LH)	!A1&!A2&B1&!B2	0.0100	0.0010	0.2307	0.1799
C(HL)	ZN(LH)	!A1&A2&!B1&!B2	0.0100	0.0010	0.1791	0.1107
C(HL)	ZN(LH)	!A1&A2&!B1&B2	0.0100	0.0010	0.2120	0.1393
C(HL)	ZN(LH)	!A1&A2&B1&!B2	0.0100	0.0010	0.2631	0.1774
C(HL)	ZN(LH)	A1&!A2&!B1&!B2	0.0100	0.0010	0.2217	0.1424
C(HL)	ZN(LH)	A1&!A2&!B1&B2	0.0100	0.0010	0.2632	0.1775
C(HL)	ZN(LH)	A1&!A2&B1&!B2	0.0100	0.0010	0.3143	0.2159
C(LH)	ZN(HL)	!A1&!A2&!B1&!B2	0.0100	0.0010	0.1193	0.0719

continues on next page

Table 172 – continued from previous page

C(LH)	ZN(HL)	!A1&!A2&!B1&B2	0.0100	0.0010	0.1197	0.0717
C(LH)	ZN(HL)	!A1&!A2&B1&!B2	0.0100	0.0010	0.1289	0.0893
C(LH)	ZN(HL)	!A1&A2&!B1&!B2	0.0100	0.0010	0.0977	0.0623
C(LH)	ZN(HL)	!A1&A2&!B1&B2	0.0100	0.0010	0.0982	0.0623
C(LH)	ZN(HL)	!A1&A2&B1&!B2	0.0100	0.0010	0.1072	0.0804
C(LH)	ZN(HL)	A1&!A2&!B1&!B2	0.0100	0.0010	0.1069	0.0803
C(LH)	ZN(HL)	A1&!A2&!B1&B2	0.0100	0.0010	0.1073	0.0804
C(LH)	ZN(HL)	A1&!A2&B1&!B2	0.0100	0.0010	0.1179	0.0982
B2(HL)	ZN(LH)	!A1&!A2&B1&!C	0.0100	0.0010	0.2713	0.1804
B2(HL)	ZN(LH)	!A1&A2&B1&!C	0.0100	0.0010	0.3041	0.1777
B2(HL)	ZN(LH)	A1&!A2&B1&!C	0.0100	0.0010	0.3547	0.2160
B2(LH)	ZN(HL)	!A1&!A2&B1&!C	0.0100	0.0010	0.1506	0.0963
B2(LH)	ZN(HL)	!A1&A2&B1&!C	0.0100	0.0010	0.1181	0.0829
B2(LH)	ZN(HL)	A1&!A2&B1&!C	0.0100	0.0010	0.1303	0.1050
B1(HL)	ZN(LH)	!A1&!A2&B2&!C	0.0100	0.0010	0.2355	0.1478
B1(HL)	ZN(LH)	!A1&A2&B2&!C	0.0100	0.0010	0.2614	0.1388
B1(HL)	ZN(LH)	A1&!A2&B2&!C	0.0100	0.0010	0.3151	0.1774
B1(LH)	ZN(HL)	!A1&!A2&B2&!C	0.0100	0.0010	0.1397	0.0966
B1(LH)	ZN(HL)	!A1&A2&B2&!C	0.0100	0.0010	0.1070	0.0839
B1(LH)	ZN(HL)	A1&!A2&B2&!C	0.0100	0.0010	0.1192	0.1055
A1(HL)	ZN(LH)	A2&!B1&!B2&!C	0.0100	0.0010	0.1170	0.1043
A1(HL)	ZN(LH)	A2&!B1&B2&!C	0.0100	0.0010	0.1260	0.1264
A1(HL)	ZN(LH)	A2&B1&!B2&!C	0.0100	0.0010	0.1758	0.1703
A1(LH)	ZN(HL)	A2&!B1&!B2&!C	0.0100	0.0010	0.0679	0.0403
A1(LH)	ZN(HL)	A2&!B1&B2&!C	0.0100	0.0010	0.0679	0.0402
A1(LH)	ZN(HL)	A2&B1&!B2&!C	0.0100	0.0010	0.0730	0.0559
A2(HL)	ZN(LH)	A1&!B1&!B2&!C	0.0100	0.0010	0.1508	0.1388
A2(HL)	ZN(LH)	A1&!B1&B2&!C	0.0100	0.0010	0.1655	0.1693
A2(HL)	ZN(LH)	A1&B1&!B2&!C	0.0100	0.0010	0.2153	0.2114
A2(LH)	ZN(HL)	A1&!B1&!B2&!C	0.0100	0.0010	0.0789	0.0401
A2(LH)	ZN(HL)	A1&!B1&B2&!C	0.0100	0.0010	0.0789	0.0401
A2(LH)	ZN(HL)	A1&B1&!B2&!C	0.0100	0.0010	0.0840	0.0559

DYNAMIC ENERGY

Input Pin	When Condition	Tin (ns)	Output	Out Load (pf)	Energy (uW/MHz)
C	!A1&!A2&!B1&!B2	0.0100	ZN(LH)	0.0010	0.6324
C	!A1&!A2&!B1&B2	0.0100	ZN(LH)	0.0010	0.6324
C	!A1&!A2&B1&!B2	0.0100	ZN(LH)	0.0010	0.7472
C	!A1&A2&!B1&!B2	0.0100	ZN(LH)	0.0010	0.5658
C	!A1&A2&!B1&B2	0.0100	ZN(LH)	0.0010	0.5659
C	!A1&A2&B1&!B2	0.0100	ZN(LH)	0.0010	0.6808
C	A1&!A2&!B1&!B2	0.0100	ZN(LH)	0.0010	0.6805
C	A1&!A2&!B1&B2	0.0100	ZN(LH)	0.0010	0.6806
C	A1&!A2&B1&!B2	0.0100	ZN(LH)	0.0010	0.7949
C	!A1&!A2&!B1&!B2	0.0100	ZN(HL)	0.0010	0.1442
C	!A1&!A2&!B1&B2	0.0100	ZN(HL)	0.0010	0.1457

continues on next page

Table 173 – continued from previous page

C	!A1&!A2&B1&!B2	0.0100	ZN(HL)	0.0010	0.1457
C	!A1&A2&!B1&!B2	0.0100	ZN(HL)	0.0010	0.1241
C	!A1&A2&!B1&B2	0.0100	ZN(HL)	0.0010	0.1259
C	!A1&A2&B1&!B2	0.0100	ZN(HL)	0.0010	0.1260
C	A1&!A2&!B1&!B2	0.0100	ZN(HL)	0.0010	0.1242
C	A1&!A2&!B1&B2	0.0100	ZN(HL)	0.0010	0.1260
C	A1&!A2&B1&!B2	0.0100	ZN(HL)	0.0010	0.1260
A1	A2&!B1&!B2&!C	0.0100	ZN(LH)	0.0010	0.4296
A1	A2&!B1&B2&!C	0.0100	ZN(LH)	0.0010	0.4297
A1	A2&B1&!B2&!C	0.0100	ZN(LH)	0.0010	0.5466
B2	!A1&!A2&B1&!C	0.0100	ZN(LH)	0.0010	0.8768
B2	!A1&A2&B1&!C	0.0100	ZN(LH)	0.0010	0.8100
B2	A1&!A2&B1&!C	0.0100	ZN(LH)	0.0010	0.9237
B1	!A1&!A2&B2&!C	0.0100	ZN(LH)	0.0010	0.7755
B1	!A1&A2&B2&!C	0.0100	ZN(LH)	0.0010	0.7088
B1	A1&!A2&B2&!C	0.0100	ZN(LH)	0.0010	0.8269
A2	A1&!B1&!B2&!C	0.0100	ZN(LH)	0.0010	0.5290
A2	A1&!B1&B2&!C	0.0100	ZN(LH)	0.0010	0.5292
A2	A1&B1&!B2&!C	0.0100	ZN(LH)	0.0010	0.6431
B1	!A1&!A2&B2&!C	0.0100	ZN(HL)	0.0010	0.2392
B1	!A1&A2&B2&!C	0.0100	ZN(HL)	0.0010	0.2203
B1	A1&!A2&B2&!C	0.0100	ZN(HL)	0.0010	0.2203
A1	A2&!B1&!B2&!C	0.0100	ZN(HL)	0.0010	0.0084
A1	A2&!B1&B2&!C	0.0100	ZN(HL)	0.0010	0.0084
A1	A2&B1&!B2&!C	0.0100	ZN(HL)	0.0010	0.0083
B2	!A1&!A2&B1&!C	0.0100	ZN(HL)	0.0010	0.2389
B2	!A1&A2&B1&!C	0.0100	ZN(HL)	0.0010	0.2202
B2	A1&!A2&B1&!C	0.0100	ZN(HL)	0.0010	0.2202
A2	A1&!B1&!B2&!C	0.0100	ZN(HL)	0.0010	0.0081
A2	A1&!B1&B2&!C	0.0100	ZN(HL)	0.0010	0.0082
A2	A1&B1&!B2&!C	0.0100	ZN(HL)	0.0010	0.0082
A1(LH)	!A2&!B1&!B2&!C	0.0100	n/a	n/a	-0.0960
A1(LH)	!A2&!B1&B2&!C	0.0100	n/a	n/a	-0.0960
A1(LH)	!A2&B1&!B2&!C	0.0100	n/a	n/a	-0.0960
A1(LH)	!A2&!B1&!B2&C	0.0100	n/a	n/a	-0.0284
A1(LH)	!A2&!B1&B2&C	0.0100	n/a	n/a	-0.0284
A1(LH)	!A2&B1&!B2&C	0.0100	n/a	n/a	-0.0284
A1(LH)	!A2&B1&B2&!C	0.0100	n/a	n/a	-0.0285
A1(LH)	!A2&B1&B2&C	0.0100	n/a	n/a	-0.0284
A1(LH)	A2&!B1&!B2&C	0.0100	n/a	n/a	-0.0307
A1(LH)	A2&!B1&B2&C	0.0100	n/a	n/a	-0.0307
A1(LH)	A2&B1&!B2&C	0.0100	n/a	n/a	-0.0307
A1(LH)	A2&B1&B2&!C	0.0100	n/a	n/a	-0.0308
A1(LH)	A2&B1&B2&C	0.0100	n/a	n/a	-0.0307
C(HL)	!A1&!A2&B1&B2	0.0100	n/a	n/a	0.1027
C(HL)	!A1&A2&B1&B2	0.0100	n/a	n/a	0.1024
C(HL)	A1&!A2&B1&B2	0.0100	n/a	n/a	0.1024
C(HL)	A1&A2&!B1&!B2	0.0100	n/a	n/a	0.1194
C(HL)	A1&A2&!B1&B2	0.0100	n/a	n/a	0.1192
C(HL)	A1&A2&B1&!B2	0.0100	n/a	n/a	0.1192
C(HL)	A1&A2&B1&B2	0.0100	n/a	n/a	0.0665
B2(LH)	!A1&!A2&!B1&!C	0.0100	n/a	n/a	-0.1190

continues on next page

Table 173 – continued from previous page

B2(LH)	!A1&A2&!B1&!C	0.0100	n/a	n/a	-0.1189
B2(LH)	A1&!A2&!B1&!C	0.0100	n/a	n/a	-0.1189
B2(LH)	!A1&!A2&!B1&C	0.0100	n/a	n/a	-0.1187
B2(LH)	!A1&!A2&B1&C	0.0100	n/a	n/a	-0.1041
B2(LH)	!A1&A2&!B1&C	0.0100	n/a	n/a	-0.1187
B2(LH)	!A1&A2&B1&C	0.0100	n/a	n/a	-0.1042
B2(LH)	A1&!A2&!B1&C	0.0100	n/a	n/a	-0.1187
B2(LH)	A1&!A2&B1&C	0.0100	n/a	n/a	-0.1042
B2(LH)	A1&A2&!B1&!C	0.0100	n/a	n/a	-0.1187
B2(LH)	A1&A2&!B1&C	0.0100	n/a	n/a	-0.1187
B2(LH)	A1&A2&B1&!C	0.0100	n/a	n/a	-0.0971
B2(LH)	A1&A2&B1&C	0.0100	n/a	n/a	-0.1074
A2(HL)	!A1&!B1&!B2&!C	0.0100	n/a	n/a	0.1313
A2(HL)	!A1&!B1&B2&!C	0.0100	n/a	n/a	0.1312
A2(HL)	!A1&B1&!B2&!C	0.0100	n/a	n/a	0.1312
A2(HL)	!A1&!B1&!B2&C	0.0100	n/a	n/a	0.0305
A2(HL)	!A1&!B1&B2&C	0.0100	n/a	n/a	0.0305
A2(HL)	!A1&B1&!B2&C	0.0100	n/a	n/a	0.0305
A2(HL)	!A1&B1&B2&!C	0.0100	n/a	n/a	0.0304
A2(HL)	!A1&B1&B2&C	0.0100	n/a	n/a	0.0305
A2(HL)	A1&!B1&!B2&C	0.0100	n/a	n/a	0.1221
A2(HL)	A1&!B1&B2&C	0.0100	n/a	n/a	0.1221
A2(HL)	A1&B1&!B2&C	0.0100	n/a	n/a	0.1220
A2(HL)	A1&B1&B2&!C	0.0100	n/a	n/a	0.2249
A2(HL)	A1&B1&B2&C	0.0100	n/a	n/a	0.1221
B1(HL)	!A1&!A2&!B2&!C	0.0100	n/a	n/a	0.1326
B1(HL)	!A1&A2&!B2&!C	0.0100	n/a	n/a	0.1326
B1(HL)	A1&!A2&!B2&!C	0.0100	n/a	n/a	0.1326
B1(HL)	!A1&!A2&!B2&C	0.0100	n/a	n/a	0.1193
B1(HL)	!A1&!A2&B2&C	0.0100	n/a	n/a	0.1185
B1(HL)	!A1&A2&!B2&C	0.0100	n/a	n/a	0.1193
B1(HL)	!A1&A2&B2&C	0.0100	n/a	n/a	0.1185
B1(HL)	A1&!A2&!B2&C	0.0100	n/a	n/a	0.1192
B1(HL)	A1&!A2&B2&C	0.0100	n/a	n/a	0.1185
B1(HL)	A1&A2&!B2&!C	0.0100	n/a	n/a	0.1194
B1(HL)	A1&A2&!B2&C	0.0100	n/a	n/a	0.1193
B1(HL)	A1&A2&B2&!C	0.0100	n/a	n/a	0.1177
B1(HL)	A1&A2&B2&C	0.0100	n/a	n/a	0.1185
B2(HL)	!A1&!A2&!B1&!C	0.0100	n/a	n/a	0.1312
B2(HL)	!A1&A2&!B1&!C	0.0100	n/a	n/a	0.1312
B2(HL)	A1&!A2&!B1&!C	0.0100	n/a	n/a	0.1312
B2(HL)	!A1&!A2&!B1&C	0.0100	n/a	n/a	0.1192
B2(HL)	!A1&!A2&B1&C	0.0100	n/a	n/a	0.1184
B2(HL)	!A1&A2&!B1&C	0.0100	n/a	n/a	0.1192
B2(HL)	!A1&A2&B1&C	0.0100	n/a	n/a	0.1184
B2(HL)	A1&!A2&!B1&C	0.0100	n/a	n/a	0.1192
B2(HL)	A1&!A2&B1&C	0.0100	n/a	n/a	0.1184
B2(HL)	A1&A2&!B1&!C	0.0100	n/a	n/a	0.1191
B2(HL)	A1&A2&!B1&C	0.0100	n/a	n/a	0.1192
B2(HL)	A1&A2&B1&!C	0.0100	n/a	n/a	0.1175
B2(HL)	A1&A2&B1&C	0.0100	n/a	n/a	0.1184
A1(HL)	!A2&!B1&!B2&!C	0.0100	n/a	n/a	0.1328

continues on next page

Table 173 – continued from previous page

A1(HL)	!A2&!B1&B2&!C	0.0100	n/a	n/a	0.1328
A1(HL)	!A2&B1&!B2&!C	0.0100	n/a	n/a	0.1328
A1(HL)	!A2&!B1&!B2&C	0.0100	n/a	n/a	0.0303
A1(HL)	!A2&!B1&B2&C	0.0100	n/a	n/a	0.0303
A1(HL)	!A2&B1&!B2&C	0.0100	n/a	n/a	0.0303
A1(HL)	!A2&B1&B2&!C	0.0100	n/a	n/a	0.0302
A1(HL)	!A2&B1&B2&C	0.0100	n/a	n/a	0.0303
A1(HL)	A2&!B1&!B2&C	0.0100	n/a	n/a	0.1219
A1(HL)	A2&!B1&B2&C	0.0100	n/a	n/a	0.1219
A1(HL)	A2&B1&!B2&C	0.0100	n/a	n/a	0.1219
A1(HL)	A2&B1&B2&!C	0.0100	n/a	n/a	0.2247
A1(HL)	A2&B1&B2&C	0.0100	n/a	n/a	0.1219
B1(LH)	!A1&!A2&!B2&!C	0.0100	n/a	n/a	-0.0948
B1(LH)	!A1&A2&!B2&!C	0.0100	n/a	n/a	-0.0948
B1(LH)	A1&!A2&!B2&!C	0.0100	n/a	n/a	-0.0948
B1(LH)	!A1&!A2&!B2&C	0.0100	n/a	n/a	-0.1188
B1(LH)	!A1&!A2&B2&C	0.0100	n/a	n/a	-0.1042
B1(LH)	!A1&A2&!B2&C	0.0100	n/a	n/a	-0.1188
B1(LH)	!A1&A2&B2&C	0.0100	n/a	n/a	-0.1043
B1(LH)	A1&!A2&!B2&C	0.0100	n/a	n/a	-0.1188
B1(LH)	A1&!A2&B2&C	0.0100	n/a	n/a	-0.1043
B1(LH)	A1&A2&!B2&!C	0.0100	n/a	n/a	-0.1189
B1(LH)	A1&A2&!B2&C	0.0100	n/a	n/a	-0.1188
B1(LH)	A1&A2&B2&!C	0.0100	n/a	n/a	-0.0972
B1(LH)	A1&A2&B2&C	0.0100	n/a	n/a	-0.1075
C(LH)	!A1&!A2&B1&B2	0.0100	n/a	n/a	-0.0359
C(LH)	!A1&A2&B1&B2	0.0100	n/a	n/a	-0.0360
C(LH)	A1&!A2&B1&B2	0.0100	n/a	n/a	-0.0360
C(LH)	A1&A2&!B1&!B2	0.0100	n/a	n/a	-0.0884
C(LH)	A1&A2&!B1&B2	0.0100	n/a	n/a	-0.0870
C(LH)	A1&A2&B1&!B2	0.0100	n/a	n/a	-0.0870
C(LH)	A1&A2&B1&B2	0.0100	n/a	n/a	-0.0681
A2(LH)	!A1&!B1&!B2&!C	0.0100	n/a	n/a	-0.1200
A2(LH)	!A1&!B1&B2&!C	0.0100	n/a	n/a	-0.1199
A2(LH)	!A1&B1&!B2&!C	0.0100	n/a	n/a	-0.1199
A2(LH)	!A1&!B1&!B2&C	0.0100	n/a	n/a	-0.0285
A2(LH)	!A1&!B1&B2&C	0.0100	n/a	n/a	-0.0285
A2(LH)	!A1&B1&!B2&C	0.0100	n/a	n/a	-0.0285
A2(LH)	!A1&B1&B2&!C	0.0100	n/a	n/a	-0.0285
A2(LH)	!A1&B1&B2&C	0.0100	n/a	n/a	-0.0285
A2(LH)	A1&!B1&!B2&C	0.0100	n/a	n/a	-0.0308
A2(LH)	A1&!B1&B2&C	0.0100	n/a	n/a	-0.0308
A2(LH)	A1&B1&!B2&C	0.0100	n/a	n/a	-0.0308
A2(LH)	A1&B1&B2&!C	0.0100	n/a	n/a	-0.0309
A2(LH)	A1&B1&B2&C	0.0100	n/a	n/a	-0.0308

LEAKAGE POWER

When Condition	Power (nW)
!A1&!A2&!B1&!B2&!C	0.2019
!A1&!A2&!B1&B2&!C	0.2025
!A1&!A2&B1&!B2&!C	0.2820
!A1&A2&!B1&!B2&!C	0.2025
!A1&A2&!B1&B2&!C	0.2031
!A1&A2&B1&!B2&!C	0.2826
A1&!A2&!B1&!B2&!C	0.2820
A1&!A2&!B1&B2&!C	0.2826
A1&!A2&B1&!B2&!C	0.3622
!A1&!A2&!B1&!B2&C	0.2609
!A1&!A2&!B1&B2&C	0.2609
!A1&!A2&B1&!B2&C	0.2609
!A1&!A2&B1&B2&!C	0.3693
!A1&!A2&B1&B2&C	0.2605
!A1&A2&!B1&!B2&C	0.2667
!A1&A2&!B1&B2&C	0.2667
!A1&A2&B1&!B2&C	0.2667
!A1&A2&B1&B2&!C	0.3749
!A1&A2&B1&B2&C	0.2663
A1&!A2&!B1&!B2&C	0.2667
A1&!A2&!B1&B2&C	0.2667
A1&!A2&B1&!B2&C	0.2667
A1&!A2&B1&B2&!C	0.3749
A1&!A2&B1&B2&C	0.2663
A1&A2&!B1&!B2&!C	0.1574
A1&A2&!B1&!B2&C	0.1573
A1&A2&!B1&B2&!C	0.1574
A1&A2&!B1&B2&C	0.1573
A1&A2&B1&!B2&!C	0.1574
A1&A2&B1&!B2&C	0.1573
A1&A2&B1&B2&!C	0.1568
A1&A2&B1&B2&C	0.1569

gf180mcu_fd_sc_mcu9t5v0__aoi221_4

gf180mcu_fd_sc_mcu9t5v0__aoi221_4 symbol

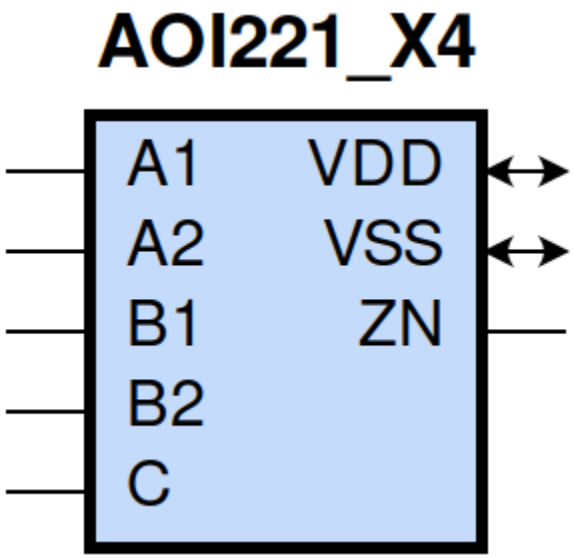

gf180mcu_fd_sc_mcu9t5v0__aoi221_4 schematic

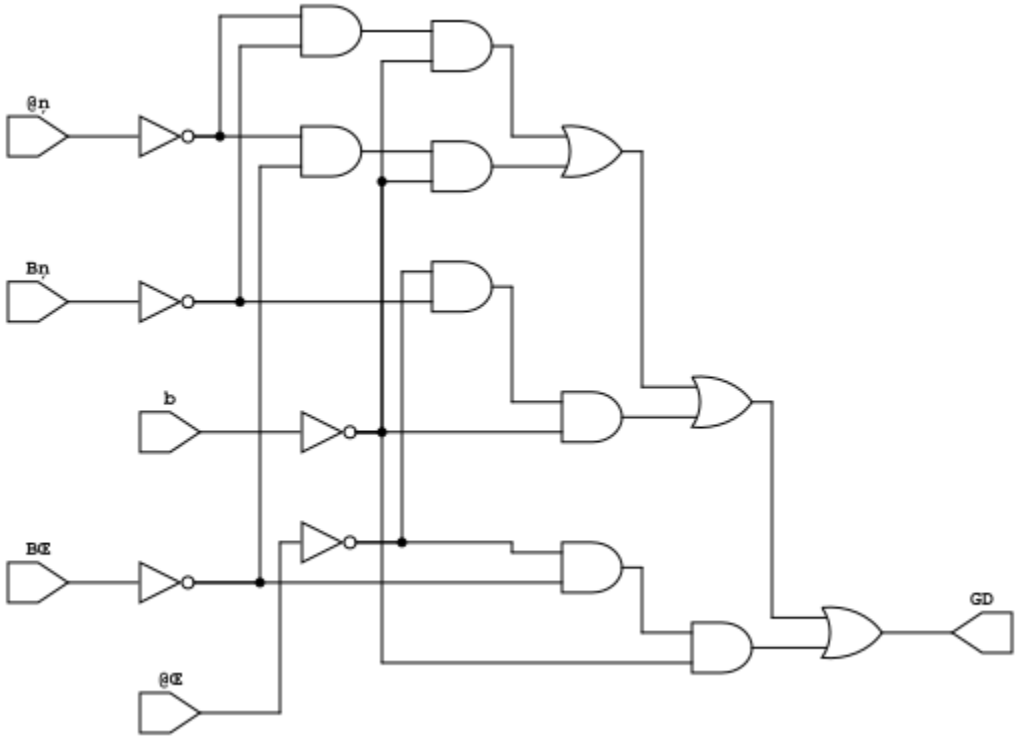

gf180mcu_fd_sc_mcu9t5v0__aoi221_4 layout

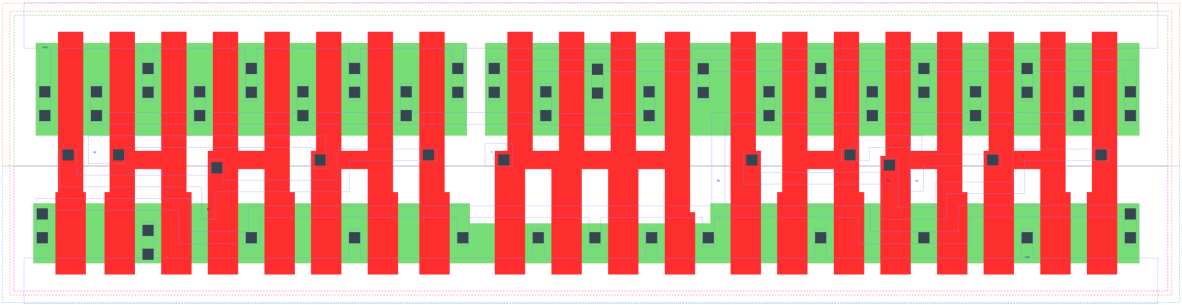

AOI221_X4 is a two 2-input AND into 3-input NOR with 4X drive strength

Attributes

Attribute	Value
area	112.896000 μm^2

OUTPUT FUNCTIONS

Output Pin	Function
ZN	(((!A1)&(!B1)&(!C))|((!A1)&(!B2)&(!C))|((!A2)&(!B1)&(!C))|((!A2)&(!B2)&(!C)))

TRUTH TABLE FOR ZN

A1	A2	B1	B2	C	ZN
0	?	0	?	0	1
0	?	?	0	0	1
?	0	0	?	0	1
?	0	?	0	0	1
1	1	?	?	?	0
?	?	1	1	?	0
?	?	?	?	1	0

FUNCTIONAL SCHEMATIC

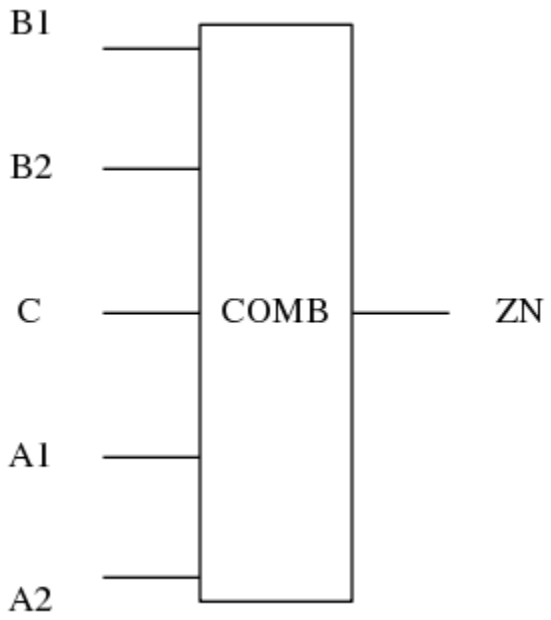

PIN CAPACITANCE (pf)

Pin	Type	Capacitance (pf)
B1	input	0.0267
B2	input	0.0257
C	input	0.0219
A1	input	0.0279
A2	input	0.0266

DELAY AND OUTPUT TRANSITION TIME corresponding to min slew and load

Input Pin	Output	When Condition	Tin (ns)	Out Load (pf)	Delay (ns)	Tout (ns)
B1(HL)	ZN(LH)	!A1&!A2&B2&!C	0.0100	0.0010	0.2225	0.1391
B1(HL)	ZN(LH)	!A1&A2&B2&!C	0.0100	0.0010	0.2460	0.1297
B1(HL)	ZN(LH)	A1&!A2&B2&!C	0.0100	0.0010	0.3011	0.1690
B1(LH)	ZN(HL)	!A1&!A2&B2&!C	0.0100	0.0010	0.1335	0.0913
B1(LH)	ZN(HL)	!A1&A2&B2&!C	0.0100	0.0010	0.1014	0.0788
B1(LH)	ZN(HL)	A1&!A2&B2&!C	0.0100	0.0010	0.1138	0.1015
B2(HL)	ZN(LH)	!A1&!A2&B1&!C	0.0100	0.0010	0.2613	0.1731
B2(HL)	ZN(LH)	!A1&A2&B1&!C	0.0100	0.0010	0.2919	0.1699
B2(HL)	ZN(LH)	A1&!A2&B1&!C	0.0100	0.0010	0.3439	0.2095
B2(LH)	ZN(HL)	!A1&!A2&B1&!C	0.0100	0.0010	0.1450	0.0912

continues on next page

Table 175 – continued from previous page

B2(LH)	ZN(HL)	!A1&A2&B1&!C	0.0100	0.0010	0.1134	0.0783
B2(LH)	ZN(HL)	A1&!A2&B1&!C	0.0100	0.0010	0.1256	0.1008
C(HL)	ZN(LH)	!A1&!A2&!B1&!B2	0.0100	0.0010	0.1459	0.1050
C(HL)	ZN(LH)	!A1&!A2&!B1&B2	0.0100	0.0010	0.1760	0.1390
C(HL)	ZN(LH)	!A1&!A2&B1&!B2	0.0100	0.0010	0.2209	0.1727
C(HL)	ZN(LH)	!A1&A2&!B1&!B2	0.0100	0.0010	0.1674	0.1033
C(HL)	ZN(LH)	!A1&A2&!B1&B2	0.0100	0.0010	0.1976	0.1299
C(HL)	ZN(LH)	!A1&A2&B1&!B2	0.0100	0.0010	0.2511	0.1697
C(HL)	ZN(LH)	A1&!A2&!B1&!B2	0.0100	0.0010	0.2111	0.1360
C(HL)	ZN(LH)	A1&!A2&!B1&B2	0.0100	0.0010	0.2504	0.1692
C(HL)	ZN(LH)	A1&!A2&B1&!B2	0.0100	0.0010	0.3035	0.2094
C(LH)	ZN(HL)	!A1&!A2&!B1&!B2	0.0100	0.0010	0.1136	0.0671
C(LH)	ZN(HL)	!A1&!A2&!B1&B2	0.0100	0.0010	0.1139	0.0670
C(LH)	ZN(HL)	!A1&!A2&B1&!B2	0.0100	0.0010	0.1231	0.0850
C(LH)	ZN(HL)	!A1&A2&!B1&!B2	0.0100	0.0010	0.0928	0.0577
C(LH)	ZN(HL)	!A1&A2&!B1&B2	0.0100	0.0010	0.0933	0.0577
C(LH)	ZN(HL)	!A1&A2&B1&!B2	0.0100	0.0010	0.1020	0.0765
C(LH)	ZN(HL)	A1&!A2&!B1&!B2	0.0100	0.0010	0.1016	0.0763
C(LH)	ZN(HL)	A1&!A2&!B1&B2	0.0100	0.0010	0.1020	0.0763
C(LH)	ZN(HL)	A1&!A2&B1&!B2	0.0100	0.0010	0.1129	0.0945
A1(HL)	ZN(LH)	A2&!B1&!B2&!C	0.0100	0.0010	0.1116	0.0978
A1(HL)	ZN(LH)	A2&!B1&B2&!C	0.0100	0.0010	0.1203	0.1184
A1(HL)	ZN(LH)	A2&B1&!B2&!C	0.0100	0.0010	0.1726	0.1639
A1(LH)	ZN(HL)	A2&!B1&!B2&!C	0.0100	0.0010	0.0646	0.0375
A1(LH)	ZN(HL)	A2&!B1&B2&!C	0.0100	0.0010	0.0646	0.0375
A1(LH)	ZN(HL)	A2&B1&!B2&!C	0.0100	0.0010	0.0695	0.0538
A2(HL)	ZN(LH)	A1&!B1&!B2&!C	0.0100	0.0010	0.1470	0.1328
A2(HL)	ZN(LH)	A1&!B1&B2&!C	0.0100	0.0010	0.1620	0.1621
A2(HL)	ZN(LH)	A1&B1&!B2&!C	0.0100	0.0010	0.2140	0.2058
A2(LH)	ZN(HL)	A1&!B1&!B2&!C	0.0100	0.0010	0.0759	0.0374
A2(LH)	ZN(HL)	A1&!B1&B2&!C	0.0100	0.0010	0.0760	0.0374
A2(LH)	ZN(HL)	A1&B1&!B2&!C	0.0100	0.0010	0.0810	0.0538

DYNAMIC ENERGY

Input Pin	When Condition	Tin (ns)	Output	Out Load (pf)	Energy (uW/MHz)
C	!A1&!A2&!B1&!B2	0.0100	ZN(LH)	0.0010	1.2004
C	!A1&!A2&!B1&B2	0.0100	ZN(LH)	0.0010	1.2006
C	!A1&!A2&B1&!B2	0.0100	ZN(LH)	0.0010	1.4401
C	!A1&A2&!B1&!B2	0.0100	ZN(LH)	0.0010	1.0674
C	!A1&A2&!B1&B2	0.0100	ZN(LH)	0.0010	1.0675
C	!A1&A2&B1&!B2	0.0100	ZN(LH)	0.0010	1.3075
C	A1&!A2&!B1&!B2	0.0100	ZN(LH)	0.0010	1.3037
C	A1&!A2&!B1&B2	0.0100	ZN(LH)	0.0010	1.3040
C	A1&!A2&B1&!B2	0.0100	ZN(LH)	0.0010	1.5420
C	!A1&!A2&!B1&!B2	0.0100	ZN(HL)	0.0010	0.2756
C	!A1&!A2&!B1&B2	0.0100	ZN(HL)	0.0010	0.2789

continues on next page

Table 176 – continued from previous page

C	!A1&!A2&B1&!B2	0.0100	ZN(HL)	0.0010	0.2792
C	!A1&A2&!B1&!B2	0.0100	ZN(HL)	0.0010	0.2354
C	!A1&A2&!B1&B2	0.0100	ZN(HL)	0.0010	0.2395
C	!A1&A2&B1&!B2	0.0100	ZN(HL)	0.0010	0.2396
C	A1&!A2&!B1&!B2	0.0100	ZN(HL)	0.0010	0.2359
C	A1&!A2&!B1&B2	0.0100	ZN(HL)	0.0010	0.2395
C	A1&!A2&B1&!B2	0.0100	ZN(HL)	0.0010	0.2394
A1	A2&!B1&!B2&!C	0.0100	ZN(LH)	0.0010	0.8278
A1	A2&!B1&B2&!C	0.0100	ZN(LH)	0.0010	0.8278
A1	A2&B1&!B2&!C	0.0100	ZN(LH)	0.0010	1.0720
B2	!A1&!A2&B1&!C	0.0100	ZN(LH)	0.0010	1.7061
B2	!A1&A2&B1&!C	0.0100	ZN(LH)	0.0010	1.5732
B2	A1&!A2&B1&!C	0.0100	ZN(LH)	0.0010	1.8070
B1	!A1&!A2&B2&!C	0.0100	ZN(LH)	0.0010	1.4901
B1	!A1&A2&B2&!C	0.0100	ZN(LH)	0.0010	1.3570
B1	A1&!A2&B2&!C	0.0100	ZN(LH)	0.0010	1.6021
A2	A1&!B1&!B2&!C	0.0100	ZN(LH)	0.0010	1.0351
A2	A1&!B1&B2&!C	0.0100	ZN(LH)	0.0010	1.0355
A2	A1&B1&!B2&!C	0.0100	ZN(LH)	0.0010	1.2734
B1	!A1&!A2&B2&!C	0.0100	ZN(HL)	0.0010	0.4576
B1	!A1&A2&B2&!C	0.0100	ZN(HL)	0.0010	0.4202
B1	A1&!A2&B2&!C	0.0100	ZN(HL)	0.0010	0.4201
A1	A2&!B1&!B2&!C	0.0100	ZN(HL)	0.0010	0.0165
A1	A2&!B1&B2&!C	0.0100	ZN(HL)	0.0010	0.0165
A1	A2&B1&!B2&!C	0.0100	ZN(HL)	0.0010	0.0164
B2	!A1&!A2&B1&!C	0.0100	ZN(HL)	0.0010	0.4570
B2	!A1&A2&B1&!C	0.0100	ZN(HL)	0.0010	0.4196
B2	A1&!A2&B1&!C	0.0100	ZN(HL)	0.0010	0.4198
A2	A1&!B1&!B2&!C	0.0100	ZN(HL)	0.0010	0.0159
A2	A1&!B1&B2&!C	0.0100	ZN(HL)	0.0010	0.0159
A2	A1&B1&!B2&!C	0.0100	ZN(HL)	0.0010	0.0162
A1(LH)	!A2&!B1&!B2&!C	0.0100	n/a	n/a	-0.1849
A1(LH)	!A2&!B1&B2&!C	0.0100	n/a	n/a	-0.1849
A1(LH)	!A2&B1&!B2&!C	0.0100	n/a	n/a	-0.1849
A1(LH)	!A2&!B1&!B2&C	0.0100	n/a	n/a	-0.0559
A1(LH)	!A2&!B1&B2&C	0.0100	n/a	n/a	-0.0559
A1(LH)	!A2&B1&!B2&C	0.0100	n/a	n/a	-0.0559
A1(LH)	!A2&B1&B2&!C	0.0100	n/a	n/a	-0.0565
A1(LH)	!A2&B1&B2&C	0.0100	n/a	n/a	-0.0559
A1(LH)	A2&!B1&!B2&C	0.0100	n/a	n/a	-0.0624
A1(LH)	A2&!B1&B2&C	0.0100	n/a	n/a	-0.0624
A1(LH)	A2&B1&!B2&C	0.0100	n/a	n/a	-0.0625
A1(LH)	A2&B1&B2&!C	0.0100	n/a	n/a	-0.0621
A1(LH)	A2&B1&B2&C	0.0100	n/a	n/a	-0.0625
C(HL)	!A1&!A2&B1&B2	0.0100	n/a	n/a	0.1954
C(HL)	!A1&A2&B1&B2	0.0100	n/a	n/a	0.1948
C(HL)	A1&!A2&B1&B2	0.0100	n/a	n/a	0.1948
C(HL)	A1&A2&!B1&!B2	0.0100	n/a	n/a	0.2372
C(HL)	A1&A2&!B1&B2	0.0100	n/a	n/a	0.2370
C(HL)	A1&A2&B1&!B2	0.0100	n/a	n/a	0.2370
C(HL)	A1&A2&B1&B2	0.0100	n/a	n/a	0.1336
B2(LH)	!A1&!A2&!B1&!C	0.0100	n/a	n/a	-0.2379

continues on next page

Table 176 – continued from previous page

B2(LH)	!A1&A2&!B1&!C	0.0100	n/a	n/a	-0.2378
B2(LH)	A1&!A2&!B1&!C	0.0100	n/a	n/a	-0.2378
B2(LH)	!A1&!A2&!B1&C	0.0100	n/a	n/a	-0.2376
B2(LH)	!A1&!A2&B1&C	0.0100	n/a	n/a	-0.2072
B2(LH)	!A1&A2&!B1&C	0.0100	n/a	n/a	-0.2376
B2(LH)	!A1&A2&B1&C	0.0100	n/a	n/a	-0.2073
B2(LH)	A1&!A2&!B1&C	0.0100	n/a	n/a	-0.2376
B2(LH)	A1&!A2&B1&C	0.0100	n/a	n/a	-0.2073
B2(LH)	A1&A2&!B1&!C	0.0100	n/a	n/a	-0.2376
B2(LH)	A1&A2&!B1&C	0.0100	n/a	n/a	-0.2376
B2(LH)	A1&A2&B1&!C	0.0100	n/a	n/a	-0.1950
B2(LH)	A1&A2&B1&C	0.0100	n/a	n/a	-0.2148
A2(HL)	!A1&!B1&!B2&!C	0.0100	n/a	n/a	0.2629
A2(HL)	!A1&!B1&B2&!C	0.0100	n/a	n/a	0.2628
A2(HL)	!A1&B1&!B2&!C	0.0100	n/a	n/a	0.2627
A2(HL)	!A1&!B1&!B2&C	0.0100	n/a	n/a	0.0618
A2(HL)	!A1&!B1&B2&C	0.0100	n/a	n/a	0.0618
A2(HL)	!A1&B1&!B2&C	0.0100	n/a	n/a	0.0618
A2(HL)	!A1&B1&B2&!C	0.0100	n/a	n/a	0.0616
A2(HL)	!A1&B1&B2&C	0.0100	n/a	n/a	0.0618
A2(HL)	A1&!B1&!B2&C	0.0100	n/a	n/a	0.2347
A2(HL)	A1&!B1&B2&C	0.0100	n/a	n/a	0.2347
A2(HL)	A1&B1&!B2&C	0.0100	n/a	n/a	0.2347
A2(HL)	A1&B1&B2&!C	0.0100	n/a	n/a	0.4288
A2(HL)	A1&B1&B2&C	0.0100	n/a	n/a	0.2346
B1(HL)	!A1&!A2&!B2&!C	0.0100	n/a	n/a	0.2649
B1(HL)	!A1&A2&!B2&!C	0.0100	n/a	n/a	0.2649
B1(HL)	A1&!A2&!B2&!C	0.0100	n/a	n/a	0.2649
B1(HL)	!A1&!A2&!B2&C	0.0100	n/a	n/a	0.2385
B1(HL)	!A1&!A2&B2&C	0.0100	n/a	n/a	0.2382
B1(HL)	!A1&A2&!B2&C	0.0100	n/a	n/a	0.2385
B1(HL)	!A1&A2&B2&C	0.0100	n/a	n/a	0.2382
B1(HL)	A1&!A2&!B2&C	0.0100	n/a	n/a	0.2383
B1(HL)	A1&!A2&B2&C	0.0100	n/a	n/a	0.2383
B1(HL)	A1&A2&!B2&!C	0.0100	n/a	n/a	0.2384
B1(HL)	A1&A2&!B2&C	0.0100	n/a	n/a	0.2384
B1(HL)	A1&A2&B2&!C	0.0100	n/a	n/a	0.2354
B1(HL)	A1&A2&B2&C	0.0100	n/a	n/a	0.2381
B2(HL)	!A1&!A2&!B1&!C	0.0100	n/a	n/a	0.2636
B2(HL)	!A1&A2&!B1&!C	0.0100	n/a	n/a	0.2636
B2(HL)	A1&!A2&!B1&!C	0.0100	n/a	n/a	0.2636
B2(HL)	!A1&!A2&!B1&C	0.0100	n/a	n/a	0.2389
B2(HL)	!A1&!A2&B1&C	0.0100	n/a	n/a	0.2385
B2(HL)	!A1&A2&!B1&C	0.0100	n/a	n/a	0.2389
B2(HL)	!A1&A2&B1&C	0.0100	n/a	n/a	0.2385
B2(HL)	A1&!A2&!B1&C	0.0100	n/a	n/a	0.2389
B2(HL)	A1&!A2&B1&C	0.0100	n/a	n/a	0.2385
B2(HL)	A1&A2&!B1&!C	0.0100	n/a	n/a	0.2389
B2(HL)	A1&A2&!B1&C	0.0100	n/a	n/a	0.2389
B2(HL)	A1&A2&B1&!C	0.0100	n/a	n/a	0.2354
B2(HL)	A1&A2&B1&C	0.0100	n/a	n/a	0.2385
A1(HL)	!A2&!B1&!B2&!C	0.0100	n/a	n/a	0.2655

continues on next page

Table 176 – continued from previous page

A1(HL)	!A2&!B1&B2&!C	0.0100	n/a	n/a	0.2655
A1(HL)	!A2&B1&!B2&!C	0.0100	n/a	n/a	0.2655
A1(HL)	!A2&!B1&!B2&C	0.0100	n/a	n/a	0.0616
A1(HL)	!A2&!B1&B2&C	0.0100	n/a	n/a	0.0616
A1(HL)	!A2&B1&!B2&C	0.0100	n/a	n/a	0.0617
A1(HL)	!A2&B1&B2&!C	0.0100	n/a	n/a	0.0614
A1(HL)	!A2&B1&B2&C	0.0100	n/a	n/a	0.0616
A1(HL)	A2&!B1&!B2&C	0.0100	n/a	n/a	0.2344
A1(HL)	A2&!B1&B2&C	0.0100	n/a	n/a	0.2344
A1(HL)	A2&B1&!B2&C	0.0100	n/a	n/a	0.2345
A1(HL)	A2&B1&B2&!C	0.0100	n/a	n/a	0.4286
A1(HL)	A2&B1&B2&C	0.0100	n/a	n/a	0.2344
B1(LH)	!A1&!A2&!B2&!C	0.0100	n/a	n/a	-0.1798
B1(LH)	!A1&A2&!B2&!C	0.0100	n/a	n/a	-0.1797
B1(LH)	A1&!A2&!B2&!C	0.0100	n/a	n/a	-0.1797
B1(LH)	!A1&!A2&!B2&C	0.0100	n/a	n/a	-0.2374
B1(LH)	!A1&!A2&B2&C	0.0100	n/a	n/a	-0.2070
B1(LH)	!A1&A2&!B2&C	0.0100	n/a	n/a	-0.2374
B1(LH)	!A1&A2&B2&C	0.0100	n/a	n/a	-0.2071
B1(LH)	A1&!A2&!B2&C	0.0100	n/a	n/a	-0.2374
B1(LH)	A1&!A2&B2&C	0.0100	n/a	n/a	-0.2071
B1(LH)	A1&A2&!B2&!C	0.0100	n/a	n/a	-0.2374
B1(LH)	A1&A2&!B2&C	0.0100	n/a	n/a	-0.2374
B1(LH)	A1&A2&B2&!C	0.0100	n/a	n/a	-0.1949
B1(LH)	A1&A2&B2&C	0.0100	n/a	n/a	-0.2146
C(LH)	!A1&!A2&B1&B2	0.0100	n/a	n/a	-0.0704
C(LH)	!A1&A2&B1&B2	0.0100	n/a	n/a	-0.0706
C(LH)	A1&!A2&B1&B2	0.0100	n/a	n/a	-0.0706
C(LH)	A1&A2&!B1&!B2	0.0100	n/a	n/a	-0.1777
C(LH)	A1&A2&!B1&B2	0.0100	n/a	n/a	-0.1750
C(LH)	A1&A2&B1&!B2	0.0100	n/a	n/a	-0.1750
C(LH)	A1&A2&B1&B2	0.0100	n/a	n/a	-0.1360
A2(LH)	!A1&!B1&!B2&!C	0.0100	n/a	n/a	-0.2397
A2(LH)	!A1&!B1&B2&!C	0.0100	n/a	n/a	-0.2396
A2(LH)	!A1&B1&!B2&!C	0.0100	n/a	n/a	-0.2396
A2(LH)	!A1&!B1&!B2&C	0.0100	n/a	n/a	-0.0560
A2(LH)	!A1&!B1&B2&C	0.0100	n/a	n/a	-0.0560
A2(LH)	!A1&B1&!B2&C	0.0100	n/a	n/a	-0.0560
A2(LH)	!A1&B1&B2&!C	0.0100	n/a	n/a	-0.0565
A2(LH)	!A1&B1&B2&C	0.0100	n/a	n/a	-0.0560
A2(LH)	A1&!B1&!B2&C	0.0100	n/a	n/a	-0.0625
A2(LH)	A1&!B1&B2&C	0.0100	n/a	n/a	-0.0625
A2(LH)	A1&B1&!B2&C	0.0100	n/a	n/a	-0.0626
A2(LH)	A1&B1&B2&!C	0.0100	n/a	n/a	-0.0622
A2(LH)	A1&B1&B2&C	0.0100	n/a	n/a	-0.0626

LEAKAGE POWER

When Condition	Power (nW)
!A1&!A2&!B1&!B2&!C	0.3537
!A1&!A2&!B1&B2&!C	0.3549
!A1&!A2&B1&!B2&!C	0.5141
!A1&A2&!B1&!B2&!C	0.3549
!A1&A2&!B1&B2&!C	0.3561
!A1&A2&B1&!B2&!C	0.5152
A1&!A2&!B1&!B2&!C	0.5140
A1&!A2&!B1&B2&!C	0.5152
A1&!A2&B1&!B2&!C	0.6744
!A1&!A2&!B1&!B2&C	0.4721
!A1&!A2&!B1&B2&C	0.4721
!A1&!A2&B1&!B2&C	0.4721
!A1&!A2&B1&B2&!C	0.6884
!A1&!A2&B1&B2&C	0.4720
!A1&A2&!B1&!B2&C	0.4836
!A1&A2&!B1&B2&C	0.4836
!A1&A2&B1&!B2&C	0.4836
!A1&A2&B1&B2&!C	0.6997
!A1&A2&B1&B2&C	0.4836
A1&!A2&!B1&!B2&C	0.4836
A1&!A2&!B1&B2&C	0.4836
A1&!A2&B1&!B2&C	0.4836
A1&!A2&B1&B2&!C	0.6997
A1&!A2&B1&B2&C	0.4836
A1&A2&!B1&!B2&!C	0.2649
A1&A2&!B1&!B2&C	0.2639
A1&A2&!B1&B2&!C	0.2649
A1&A2&!B1&B2&C	0.2639
A1&A2&B1&!B2&!C	0.2649
A1&A2&B1&!B2&C	0.2639
A1&A2&B1&B2&!C	0.2636
A1&A2&B1&B2&C	0.2639

gf180mcu_fd_sc_mcu9t5v0__aoi222_1

gf180mcu_fd_sc_mcu9t5v0__aoi222_1 symbol

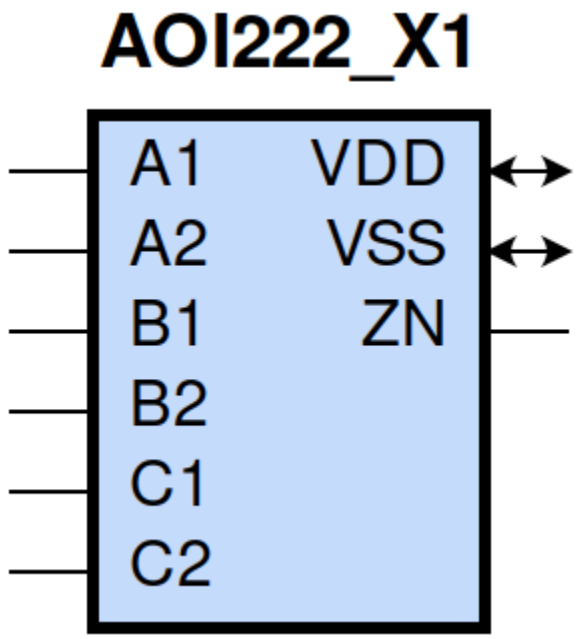

gf180mcu_fd_sc_mcu9t5v0__aoi222_1 schematic

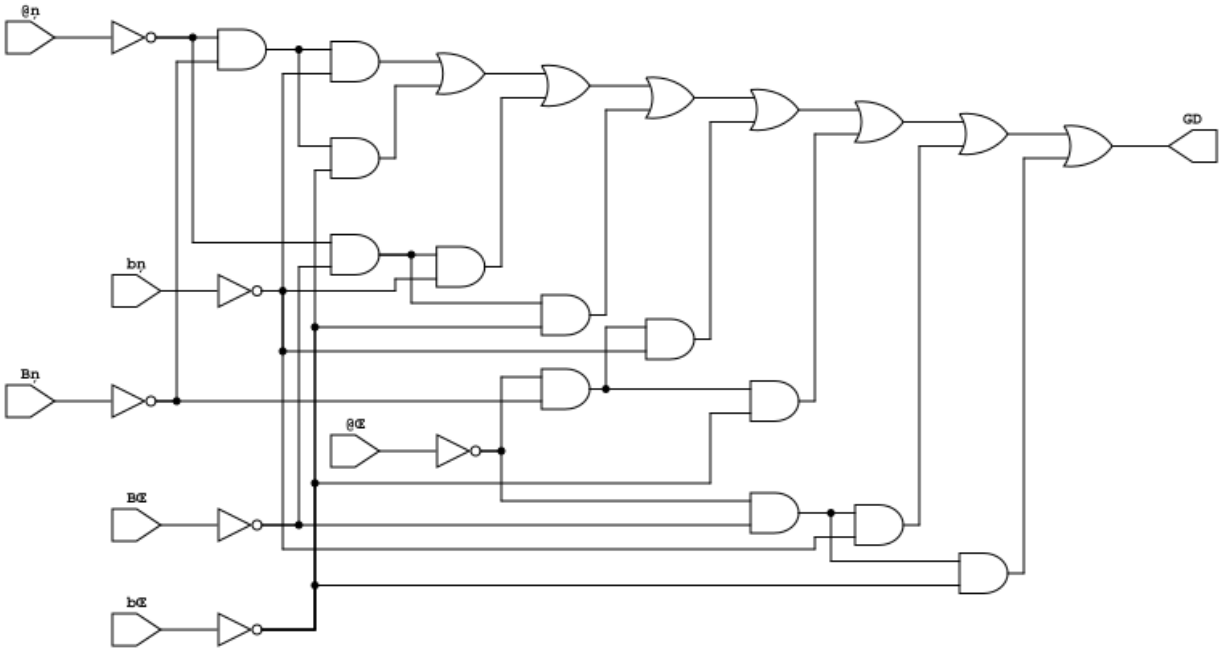

gf180mcu_fd_sc_mcu9t5v0__aoi222_1 layout

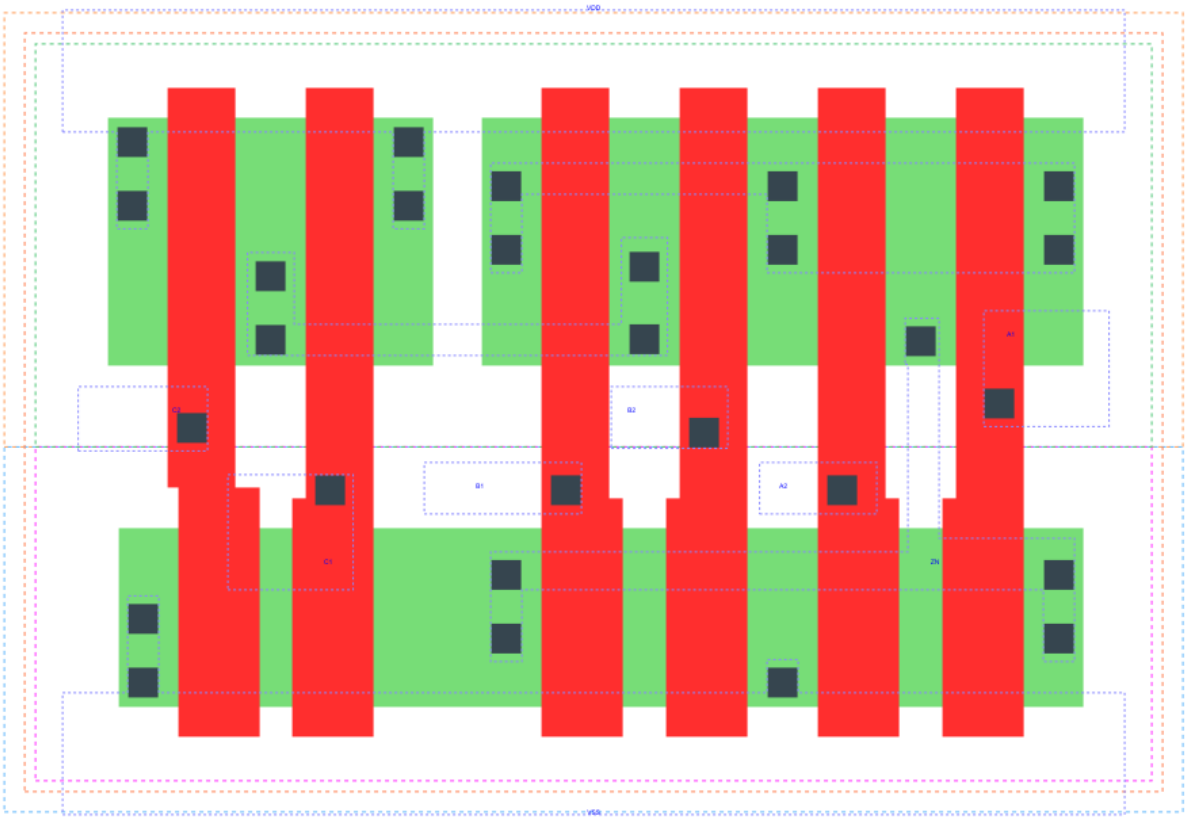

AOI222_X1 is a three 2-input AND into 3-input NOR with 1X drive strength

Attributes

Attribute	Value
area	39.513600 μm^2

OUTPUT FUNCTIONS

Output Pin	Function
ZN	(((!A1)&(!B1)&(!C1))|((!A1)&(!B1)&(!C2))|((!A1)&(!B2)&(!C1))|((!A1)&(!B2)&(!C2))|((!A2)&(!B1)&(!C1))|((!A2)&(!B

TRUTH TABLE FOR ZN

A1	A2	B1	B2	C1	C2	ZN
0	?	0	?	0	?	1
0	?	0	?	?	0	1
0	?	?	0	0	?	1
0	?	?	0	?	0	1
?	0	0	?	0	?	1
?	0	0	?	?	0	1
?	0	?	0	0	?	1
?	0	?	0	?	0	1
1	1	?	?	?	?	0
?	?	1	1	?	?	0
?	?	?	?	1	1	0

FUNCTIONAL SCHEMATIC

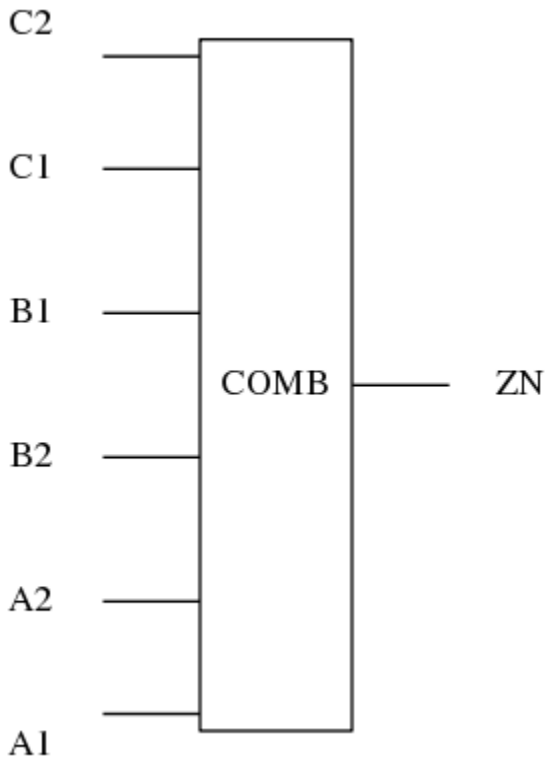

PIN CAPACITANCE (pf)

Pin	Type	Capacitance (pf)
C2	input	0.0066
C1	input	0.0068
B1	input	0.0068
B2	input	0.0066
A2	input	0.0069
A1	input	0.0072

DELAY AND OUTPUT TRANSITION TIME corresponding to min slew and load

Input Pin	Output	When Condition	Tin (ns)	Out Load (pf)	Delay (ns)	Tout (ns)
C2(LH)	ZN(HL)	!A1&!A2&!B1&!B2&C1	0.0100	0.0010	0.1591	0.1071
C2(LH)	ZN(HL)	!A1&!A2&!B1&B2&C1	0.0100	0.0010	0.1499	0.1001
C2(LH)	ZN(HL)	!A1&!A2&B1&!B2&C1	0.0100	0.0010	0.1623	0.1214
C2(LH)	ZN(HL)	!A1&A2&!B1&!B2&C1	0.0100	0.0010	0.1204	0.0911
C2(LH)	ZN(HL)	!A1&A2&!B1&B2&C1	0.0100	0.0010	0.1161	0.0855
C2(LH)	ZN(HL)	!A1&A2&B1&!B2&C1	0.0100	0.0010	0.1289	0.1088
C2(LH)	ZN(HL)	A1&!A2&!B1&!B2&C1	0.0100	0.0010	0.1339	0.1149
C2(LH)	ZN(HL)	A1&!A2&!B1&B2&C1	0.0100	0.0010	0.1289	0.1088
C2(LH)	ZN(HL)	A1&!A2&B1&!B2&C1	0.0100	0.0010	0.1424	0.1308
C2(HL)	ZN(LH)	!A1&!A2&!B1&!B2&C1	0.0100	0.0010	0.2713	0.1657
C2(HL)	ZN(LH)	!A1&!A2&!B1&B2&C1	0.0100	0.0010	0.3151	0.2053
C2(HL)	ZN(LH)	!A1&!A2&B1&!B2&C1	0.0100	0.0010	0.3636	0.2422
C2(HL)	ZN(LH)	!A1&A2&!B1&!B2&C1	0.0100	0.0010	0.3171	0.1704
C2(HL)	ZN(LH)	!A1&A2&!B1&B2&C1	0.0100	0.0010	0.3556	0.2038
C2(HL)	ZN(LH)	!A1&A2&B1&!B2&C1	0.0100	0.0010	0.4135	0.2478
C2(HL)	ZN(LH)	A1&!A2&!B1&!B2&C1	0.0100	0.0010	0.3660	0.2067
C2(HL)	ZN(LH)	A1&!A2&!B1&B2&C1	0.0100	0.0010	0.4136	0.2479
C2(HL)	ZN(LH)	A1&!A2&B1&!B2&C1	0.0100	0.0010	0.4712	0.2921
C1(LH)	ZN(HL)	!A1&!A2&!B1&!B2&C2	0.0100	0.0010	0.1483	0.1078
C1(LH)	ZN(HL)	!A1&!A2&!B1&B2&C2	0.0100	0.0010	0.1389	0.1006
C1(LH)	ZN(HL)	!A1&!A2&B1&!B2&C2	0.0100	0.0010	0.1515	0.1218
C1(LH)	ZN(HL)	!A1&A2&!B1&!B2&C2	0.0100	0.0010	0.1092	0.0915
C1(LH)	ZN(HL)	!A1&A2&!B1&B2&C2	0.0100	0.0010	0.1049	0.0862
C1(LH)	ZN(HL)	!A1&A2&B1&!B2&C2	0.0100	0.0010	0.1177	0.1092
C1(LH)	ZN(HL)	A1&!A2&!B1&!B2&C2	0.0100	0.0010	0.1229	0.1155
C1(LH)	ZN(HL)	A1&!A2&!B1&B2&C2	0.0100	0.0010	0.1177	0.1093
C1(LH)	ZN(HL)	A1&!A2&B1&!B2&C2	0.0100	0.0010	0.1313	0.1311
C1(HL)	ZN(LH)	!A1&!A2&!B1&!B2&C2	0.0100	0.0010	0.2398	0.1372
C1(HL)	ZN(LH)	!A1&!A2&!B1&B2&C2	0.0100	0.0010	0.2759	0.1692
C1(HL)	ZN(LH)	!A1&!A2&B1&!B2&C2	0.0100	0.0010	0.3266	0.2057
C1(HL)	ZN(LH)	!A1&A2&!B1&!B2&C2	0.0100	0.0010	0.2776	0.1352
C1(HL)	ZN(LH)	!A1&A2&!B1&B2&C2	0.0100	0.0010	0.3094	0.1606
C1(HL)	ZN(LH)	!A1&A2&B1&!B2&C2	0.0100	0.0010	0.3695	0.2046
C1(HL)	ZN(LH)	A1&!A2&!B1&!B2&C2	0.0100	0.0010	0.3291	0.1707
C1(HL)	ZN(LH)	A1&!A2&!B1&B2&C2	0.0100	0.0010	0.3696	0.2047
C1(HL)	ZN(LH)	A1&!A2&B1&!B2&C2	0.0100	0.0010	0.4280	0.2487

continues on next page

Table 178 – continued from previous page

B1(LH)	ZN(HL)	!A1&!A2&B2&!C1&!C2	0.0100	0.0010	0.1223	0.0799
B1(LH)	ZN(HL)	!A1&!A2&B2&!C1&C2	0.0100	0.0010	0.1227	0.0797
B1(LH)	ZN(HL)	!A1&!A2&B2&C1&!C2	0.0100	0.0010	0.1323	0.0979
B1(LH)	ZN(HL)	!A1&A2&B2&!C1&!C2	0.0100	0.0010	0.1004	0.0707
B1(LH)	ZN(HL)	!A1&A2&B2&!C1&C2	0.0100	0.0010	0.1007	0.0710
B1(LH)	ZN(HL)	!A1&A2&B2&C1&!C2	0.0100	0.0010	0.1103	0.0899
B1(LH)	ZN(HL)	A1&!A2&B2&!C1&!C2	0.0100	0.0010	0.1101	0.0903
B1(LH)	ZN(HL)	A1&!A2&B2&!C1&C2	0.0100	0.0010	0.1104	0.0905
B1(LH)	ZN(HL)	A1&!A2&B2&C1&!C2	0.0100	0.0010	0.1216	0.1090
B1(HL)	ZN(LH)	!A1&!A2&B2&!C1&!C2	0.0100	0.0010	0.1905	0.1268
B1(HL)	ZN(LH)	!A1&!A2&B2&!C1&C2	0.0100	0.0010	0.2291	0.1686
B1(HL)	ZN(LH)	!A1&!A2&B2&C1&!C2	0.0100	0.0010	0.2782	0.2046
B1(HL)	ZN(LH)	!A1&A2&B2&!C1&!C2	0.0100	0.0010	0.2229	0.1273
B1(HL)	ZN(LH)	!A1&A2&B2&!C1&C2	0.0100	0.0010	0.2627	0.1601
B1(HL)	ZN(LH)	!A1&A2&B2&C1&!C2	0.0100	0.0010	0.3208	0.2030
B1(HL)	ZN(LH)	A1&!A2&B2&!C1&!C2	0.0100	0.0010	0.2723	0.1640
B1(HL)	ZN(LH)	A1&!A2&B2&!C1&C2	0.0100	0.0010	0.3223	0.2041
B1(HL)	ZN(LH)	A1&!A2&B2&C1&!C2	0.0100	0.0010	0.3800	0.2475
B2(HL)	ZN(LH)	!A1&!A2&B1&!C1&!C2	0.0100	0.0010	0.2222	0.1566
B2(HL)	ZN(LH)	!A1&!A2&B1&!C1&C2	0.0100	0.0010	0.2693	0.2059
B2(HL)	ZN(LH)	!A1&!A2&B1&C1&!C2	0.0100	0.0010	0.3166	0.2419
B2(HL)	ZN(LH)	!A1&A2&B1&!C1&!C2	0.0100	0.0010	0.2623	0.1641
B2(HL)	ZN(LH)	!A1&A2&B1&!C1&C2	0.0100	0.0010	0.3104	0.2048
B2(HL)	ZN(LH)	!A1&A2&B1&C1&!C2	0.0100	0.0010	0.3665	0.2476
B2(HL)	ZN(LH)	A1&!A2&B1&!C1&!C2	0.0100	0.0010	0.3105	0.2008
B2(HL)	ZN(LH)	A1&!A2&B1&!C1&C2	0.0100	0.0010	0.3684	0.2487
B2(HL)	ZN(LH)	A1&!A2&B1&C1&!C2	0.0100	0.0010	0.4242	0.2921
B2(LH)	ZN(HL)	!A1&!A2&B1&!C1&!C2	0.0100	0.0010	0.1335	0.0798
B2(LH)	ZN(HL)	!A1&!A2&B1&!C1&C2	0.0100	0.0010	0.1339	0.0799
B2(LH)	ZN(HL)	!A1&!A2&B1&C1&!C2	0.0100	0.0010	0.1435	0.0979
B2(LH)	ZN(HL)	!A1&A2&B1&!C1&!C2	0.0100	0.0010	0.1117	0.0706
B2(LH)	ZN(HL)	!A1&A2&B1&!C1&C2	0.0100	0.0010	0.1120	0.0706
B2(LH)	ZN(HL)	!A1&A2&B1&C1&!C2	0.0100	0.0010	0.1217	0.0897
B2(LH)	ZN(HL)	A1&!A2&B1&!C1&!C2	0.0100	0.0010	0.1215	0.0902
B2(LH)	ZN(HL)	A1&!A2&B1&!C1&C2	0.0100	0.0010	0.1218	0.0903
B2(LH)	ZN(HL)	A1&!A2&B1&C1&!C2	0.0100	0.0010	0.1329	0.1087
A2(HL)	ZN(LH)	A1&!B1&!B2&!C1&!C2	0.0100	0.0010	0.1418	0.1233
A2(HL)	ZN(LH)	A1&!B1&!B2&!C1&C2	0.0100	0.0010	0.1554	0.1544
A2(HL)	ZN(LH)	A1&!B1&!B2&C1&!C2	0.0100	0.0010	0.2002	0.1951
A2(HL)	ZN(LH)	A1&!B1&B2&!C1&!C2	0.0100	0.0010	0.1703	0.1595
A2(HL)	ZN(LH)	A1&!B1&B2&!C1&C2	0.0100	0.0010	0.1855	0.1933
A2(HL)	ZN(LH)	A1&!B1&B2&C1&!C2	0.0100	0.0010	0.2406	0.2411
A2(HL)	ZN(LH)	A1&B1&!B2&!C1&!C2	0.0100	0.0010	0.2180	0.1981
A2(HL)	ZN(LH)	A1&B1&!B2&!C1&C2	0.0100	0.0010	0.2419	0.2422
A2(HL)	ZN(LH)	A1&B1&!B2&C1&!C2	0.0100	0.0010	0.2973	0.2883
A2(LH)	ZN(HL)	A1&!B1&!B2&!C1&!C2	0.0100	0.0010	0.0793	0.0422
A2(LH)	ZN(HL)	A1&!B1&!B2&!C1&C2	0.0100	0.0010	0.0793	0.0422
A2(LH)	ZN(HL)	A1&!B1&!B2&C1&!C2	0.0100	0.0010	0.0846	0.0579
A2(LH)	ZN(HL)	A1&!B1&B2&!C1&!C2	0.0100	0.0010	0.0795	0.0422
A2(LH)	ZN(HL)	A1&!B1&B2&!C1&C2	0.0100	0.0010	0.0796	0.0422
A2(LH)	ZN(HL)	A1&!B1&B2&C1&!C2	0.0100	0.0010	0.0848	0.0579
A2(LH)	ZN(HL)	A1&B1&!B2&!C1&!C2	0.0100	0.0010	0.0848	0.0583

continues on next page

Table 178 – continued from previous page

A2(LH)	ZN(HL)	A1&B1&!B2&!C1&C2	0.0100	0.0010	0.0848	0.0583
A2(LH)	ZN(HL)	A1&B1&!B2&C1&!C2	0.0100	0.0010	0.0920	0.0745
A1(HL)	ZN(LH)	A2&!B1&!B2&!C1&!C2	0.0100	0.0010	0.1117	0.0920
A1(HL)	ZN(LH)	A2&!B1&!B2&!C1&C2	0.0100	0.0010	0.1197	0.1128
A1(HL)	ZN(LH)	A2&!B1&!B2&C1&!C2	0.0100	0.0010	0.1638	0.1549
A1(HL)	ZN(LH)	A2&!B1&B2&!C1&!C2	0.0100	0.0010	0.1322	0.1195
A1(HL)	ZN(LH)	A2&!B1&B2&!C1&C2	0.0100	0.0010	0.1411	0.1436
A1(HL)	ZN(LH)	A2&!B1&B2&C1&!C2	0.0100	0.0010	0.1958	0.1935
A1(HL)	ZN(LH)	A2&B1&!B2&!C1&!C2	0.0100	0.0010	0.1802	0.1600
A1(HL)	ZN(LH)	A2&B1&!B2&!C1&C2	0.0100	0.0010	0.1973	0.1948
A1(HL)	ZN(LH)	A2&B1&!B2&C1&!C2	0.0100	0.0010	0.2533	0.2419
A1(LH)	ZN(HL)	A2&!B1&!B2&!C1&!C2	0.0100	0.0010	0.0680	0.0422
A1(LH)	ZN(HL)	A2&!B1&!B2&!C1&C2	0.0100	0.0010	0.0681	0.0422
A1(LH)	ZN(HL)	A2&!B1&!B2&C1&!C2	0.0100	0.0010	0.0734	0.0578
A1(LH)	ZN(HL)	A2&!B1&B2&!C1&!C2	0.0100	0.0010	0.0682	0.0420
A1(LH)	ZN(HL)	A2&!B1&B2&!C1&C2	0.0100	0.0010	0.0683	0.0423
A1(LH)	ZN(HL)	A2&!B1&B2&C1&!C2	0.0100	0.0010	0.0734	0.0579
A1(LH)	ZN(HL)	A2&B1&!B2&!C1&!C2	0.0100	0.0010	0.0735	0.0583
A1(LH)	ZN(HL)	A2&B1&!B2&!C1&C2	0.0100	0.0010	0.0735	0.0583
A1(LH)	ZN(HL)	A2&B1&!B2&C1&!C2	0.0100	0.0010	0.0807	0.0745

DYNAMIC ENERGY

Input Pin	When Condition	Tin (ns)	Output	Out Load (pf)	Energy (uW/MHz)
A1	A2&!B1&!B2&!C1&!C2	0.0100	ZN(LH)	0.0010	0.2370
A1	A2&!B1&!B2&!C1&C2	0.0100	ZN(LH)	0.0010	0.2372
A1	A2&!B1&!B2&C1&!C2	0.0100	ZN(LH)	0.0010	0.3017
A1	A2&!B1&B2&!C1&!C2	0.0100	ZN(LH)	0.0010	0.2370
A1	A2&!B1&B2&!C1&C2	0.0100	ZN(LH)	0.0010	0.2370
A1	A2&!B1&B2&C1&!C2	0.0100	ZN(LH)	0.0010	0.3015
A1	A2&B1&!B2&!C1&!C2	0.0100	ZN(LH)	0.0010	0.3031
A1	A2&B1&!B2&!C1&C2	0.0100	ZN(LH)	0.0010	0.3032
A1	A2&B1&!B2&C1&!C2	0.0100	ZN(LH)	0.0010	0.3670
B2	!A1&!A2&B1&!C1&!C2	0.0100	ZN(LH)	0.0010	0.4120
B2	!A1&!A2&B1&!C1&C2	0.0100	ZN(LH)	0.0010	0.4121
B2	!A1&!A2&B1&C1&!C2	0.0100	ZN(LH)	0.0010	0.4750
B2	!A1&A2&B1&!C1&!C2	0.0100	ZN(LH)	0.0010	0.3788
B2	!A1&A2&B1&!C1&C2	0.0100	ZN(LH)	0.0010	0.3788
B2	!A1&A2&B1&C1&!C2	0.0100	ZN(LH)	0.0010	0.4418
B2	A1&!A2&B1&!C1&!C2	0.0100	ZN(LH)	0.0010	0.4436
B2	A1&!A2&B1&!C1&C2	0.0100	ZN(LH)	0.0010	0.4436
B2	A1&!A2&B1&C1&!C2	0.0100	ZN(LH)	0.0010	0.5066
B1	!A1&!A2&B2&!C1&!C2	0.0100	ZN(HL)	0.0010	0.0933
B1	!A1&!A2&B2&!C1&C2	0.0100	ZN(HL)	0.0010	0.0941
B1	!A1&!A2&B2&C1&!C2	0.0100	ZN(HL)	0.0010	0.0943
B1	!A1&A2&B2&!C1&!C2	0.0100	ZN(HL)	0.0010	0.0836
B1	!A1&A2&B2&!C1&C2	0.0100	ZN(HL)	0.0010	0.0843

continues on next page

Table 179 – continued from previous page

B1	!A1&A2&B2&C1&!C2	0.0100	ZN(HL)	0.0010	0.0845
B1	A1&!A2&B2&!C1&!C2	0.0100	ZN(HL)	0.0010	0.0837
B1	A1&!A2&B2&!C1&C2	0.0100	ZN(HL)	0.0010	0.0845
B1	A1&!A2&B2&C1&!C2	0.0100	ZN(HL)	0.0010	0.0845
A2	A1&!B1&!B2&!C1&!C2	0.0100	ZN(LH)	0.0010	0.2935
A2	A1&!B1&!B2&!C1&C2	0.0100	ZN(LH)	0.0010	0.2936
A2	A1&!B1&!B2&C1&!C2	0.0100	ZN(LH)	0.0010	0.3567
A2	A1&!B1&B2&!C1&!C2	0.0100	ZN(LH)	0.0010	0.2934
A2	A1&!B1&B2&!C1&C2	0.0100	ZN(LH)	0.0010	0.2935
A2	A1&!B1&B2&C1&!C2	0.0100	ZN(LH)	0.0010	0.3566
A2	A1&B1&!B2&!C1&!C2	0.0100	ZN(LH)	0.0010	0.3582
A2	A1&B1&!B2&!C1&C2	0.0100	ZN(LH)	0.0010	0.3583
A2	A1&B1&!B2&C1&!C2	0.0100	ZN(LH)	0.0010	0.4214
B1	!A1&!A2&B2&!C1&!C2	0.0100	ZN(LH)	0.0010	0.3554
B1	!A1&!A2&B2&!C1&C2	0.0100	ZN(LH)	0.0010	0.3554
B1	!A1&!A2&B2&C1&!C2	0.0100	ZN(LH)	0.0010	0.4199
B1	!A1&A2&B2&!C1&!C2	0.0100	ZN(LH)	0.0010	0.3221
B1	!A1&A2&B2&!C1&C2	0.0100	ZN(LH)	0.0010	0.3220
B1	!A1&A2&B2&C1&!C2	0.0100	ZN(LH)	0.0010	0.3866
B1	A1&!A2&B2&!C1&!C2	0.0100	ZN(LH)	0.0010	0.3886
B1	A1&!A2&B2&!C1&C2	0.0100	ZN(LH)	0.0010	0.3885
B1	A1&!A2&B2&C1&!C2	0.0100	ZN(LH)	0.0010	0.4524
C1	!A1&!A2&!B1&!B2&C2	0.0100	ZN(HL)	0.0010	0.1616
C1	!A1&!A2&!B1&B2&C2	0.0100	ZN(HL)	0.0010	0.1517
C1	!A1&!A2&B1&!B2&C2	0.0100	ZN(HL)	0.0010	0.1519
C1	!A1&A2&!B1&!B2&C2	0.0100	ZN(HL)	0.0010	0.1520
C1	!A1&A2&!B1&B2&C2	0.0100	ZN(HL)	0.0010	0.1422
C1	!A1&A2&B1&!B2&C2	0.0100	ZN(HL)	0.0010	0.1423
C1	A1&!A2&!B1&!B2&C2	0.0100	ZN(HL)	0.0010	0.1520
C1	A1&!A2&!B1&B2&C2	0.0100	ZN(HL)	0.0010	0.1423
C1	A1&!A2&B1&!B2&C2	0.0100	ZN(HL)	0.0010	0.1423
A2	A1&!B1&!B2&!C1&!C2	0.0100	ZN(HL)	0.0010	0.0036
A2	A1&!B1&!B2&!C1&C2	0.0100	ZN(HL)	0.0010	0.0035
A2	A1&!B1&!B2&C1&!C2	0.0100	ZN(HL)	0.0010	0.0036
A2	A1&!B1&B2&!C1&!C2	0.0100	ZN(HL)	0.0010	0.0040
A2	A1&!B1&B2&!C1&C2	0.0100	ZN(HL)	0.0010	0.0040
A2	A1&!B1&B2&C1&!C2	0.0100	ZN(HL)	0.0010	0.0040
A2	A1&B1&!B2&!C1&!C2	0.0100	ZN(HL)	0.0010	0.0040
A2	A1&B1&!B2&!C1&C2	0.0100	ZN(HL)	0.0010	0.0040
A2	A1&B1&!B2&C1&!C2	0.0100	ZN(HL)	0.0010	0.0041
C2	!A1&!A2&!B1&!B2&C1	0.0100	ZN(HL)	0.0010	0.1616
C2	!A1&!A2&!B1&B2&C1	0.0100	ZN(HL)	0.0010	0.1517
C2	!A1&!A2&B1&!B2&C1	0.0100	ZN(HL)	0.0010	0.1518
C2	!A1&A2&!B1&!B2&C1	0.0100	ZN(HL)	0.0010	0.1519
C2	!A1&A2&!B1&B2&C1	0.0100	ZN(HL)	0.0010	0.1423
C2	!A1&A2&B1&!B2&C1	0.0100	ZN(HL)	0.0010	0.1422
C2	A1&!A2&!B1&!B2&C1	0.0100	ZN(HL)	0.0010	0.1520
C2	A1&!A2&!B1&B2&C1	0.0100	ZN(HL)	0.0010	0.1422
C2	A1&!A2&B1&!B2&C1	0.0100	ZN(HL)	0.0010	0.1422
C1	!A1&!A2&!B1&!B2&C2	0.0100	ZN(LH)	0.0010	0.4597
C1	!A1&!A2&!B1&B2&C2	0.0100	ZN(LH)	0.0010	0.4270
C1	!A1&!A2&B1&!B2&C2	0.0100	ZN(LH)	0.0010	0.4938

continues on next page

Table 179 – continued from previous page

C1	!A1&A2&!B1&!B2&C2	0.0100	ZN(LH)	0.0010	0.4262
C1	!A1&A2&!B1&B2&C2	0.0100	ZN(LH)	0.0010	0.3935
C1	!A1&A2&B1&!B2&C2	0.0100	ZN(LH)	0.0010	0.4603
C1	A1&!A2&!B1&!B2&C2	0.0100	ZN(LH)	0.0010	0.4929
C1	A1&!A2&!B1&B2&C2	0.0100	ZN(LH)	0.0010	0.4604
C1	A1&!A2&B1&!B2&C2	0.0100	ZN(LH)	0.0010	0.5261
C2	!A1&!A2&!B1&!B2&C1	0.0100	ZN(LH)	0.0010	0.5146
C2	!A1&!A2&!B1&B2&C1	0.0100	ZN(LH)	0.0010	0.4821
C2	!A1&!A2&B1&!B2&C1	0.0100	ZN(LH)	0.0010	0.5468
C2	!A1&A2&!B1&!B2&C1	0.0100	ZN(LH)	0.0010	0.4813
C2	!A1&A2&!B1&B2&C1	0.0100	ZN(LH)	0.0010	0.4488
C2	!A1&A2&B1&!B2&C1	0.0100	ZN(LH)	0.0010	0.5135
C2	A1&!A2&!B1&!B2&C1	0.0100	ZN(LH)	0.0010	0.5461
C2	A1&!A2&!B1&B2&C1	0.0100	ZN(LH)	0.0010	0.5136
C2	A1&!A2&B1&!B2&C1	0.0100	ZN(LH)	0.0010	0.5783
A1	A2&!B1&!B2&!C1&!C2	0.0100	ZN(HL)	0.0010	0.0036
A1	A2&!B1&!B2&!C1&C2	0.0100	ZN(HL)	0.0010	0.0036
A1	A2&!B1&!B2&C1&!C2	0.0100	ZN(HL)	0.0010	0.0036
A1	A2&!B1&B2&!C1&!C2	0.0100	ZN(HL)	0.0010	0.0041
A1	A2&!B1&B2&!C1&C2	0.0100	ZN(HL)	0.0010	0.0041
A1	A2&!B1&B2&C1&!C2	0.0100	ZN(HL)	0.0010	0.0040
A1	A2&B1&!B2&!C1&!C2	0.0100	ZN(HL)	0.0010	0.0040
A1	A2&B1&!B2&!C1&C2	0.0100	ZN(HL)	0.0010	0.0040
A1	A2&B1&!B2&C1&!C2	0.0100	ZN(HL)	0.0010	0.0040
B2	!A1&!A2&B1&!C1&!C2	0.0100	ZN(HL)	0.0010	0.0935
B2	!A1&!A2&B1&!C1&C2	0.0100	ZN(HL)	0.0010	0.0942
B2	!A1&!A2&B1&C1&!C2	0.0100	ZN(HL)	0.0010	0.0943
B2	!A1&A2&B1&!C1&!C2	0.0100	ZN(HL)	0.0010	0.0837
B2	!A1&A2&B1&!C1&C2	0.0100	ZN(HL)	0.0010	0.0844
B2	!A1&A2&B1&C1&!C2	0.0100	ZN(HL)	0.0010	0.0845
B2	A1&!A2&B1&!C1&!C2	0.0100	ZN(HL)	0.0010	0.0838
B2	A1&!A2&B1&!C1&C2	0.0100	ZN(HL)	0.0010	0.0845
B2	A1&!A2&B1&C1&!C2	0.0100	ZN(HL)	0.0010	0.0844
B2(LH)	!A1&!A2&!B1&!C1&!C2	0.0100	n/a	n/a	-0.0599
B2(LH)	!A1&!A2&!B1&!C1&C2	0.0100	n/a	n/a	-0.0599
B2(LH)	!A1&!A2&!B1&C1&!C2	0.0100	n/a	n/a	-0.0599
B2(LH)	!A1&A2&!B1&!C1&!C2	0.0100	n/a	n/a	-0.0598
B2(LH)	!A1&A2&!B1&!C1&C2	0.0100	n/a	n/a	-0.0598
B2(LH)	!A1&A2&!B1&C1&!C2	0.0100	n/a	n/a	-0.0598
B2(LH)	A1&!A2&!B1&!C1&!C2	0.0100	n/a	n/a	-0.0598
B2(LH)	A1&!A2&!B1&!C1&C2	0.0100	n/a	n/a	-0.0598
B2(LH)	A1&!A2&!B1&C1&!C2	0.0100	n/a	n/a	-0.0598
B2(LH)	!A1&!A2&!B1&C1&C2	0.0100	n/a	n/a	-0.0178
B2(LH)	!A1&!A2&B1&C1&C2	0.0100	n/a	n/a	-0.0188
B2(LH)	!A1&A2&!B1&C1&C2	0.0100	n/a	n/a	-0.0179
B2(LH)	!A1&A2&B1&C1&C2	0.0100	n/a	n/a	-0.0188
B2(LH)	A1&!A2&!B1&C1&C2	0.0100	n/a	n/a	-0.0179
B2(LH)	A1&!A2&B1&C1&C2	0.0100	n/a	n/a	-0.0188
B2(LH)	A1&A2&!B1&!C1&!C2	0.0100	n/a	n/a	-0.0596
B2(LH)	A1&A2&!B1&!C1&C2	0.0100	n/a	n/a	-0.0596
B2(LH)	A1&A2&!B1&C1&!C2	0.0100	n/a	n/a	-0.0596
B2(LH)	A1&A2&!B1&C1&C2	0.0100	n/a	n/a	-0.0342

continues on next page

Table 179 – continued from previous page

B2(LH)	A1&A2&B1&!C1&!C2	0.0100	n/a	n/a	-0.0473
B2(LH)	A1&A2&B1&!C1&C2	0.0100	n/a	n/a	-0.0468
B2(LH)	A1&A2&B1&C1&!C2	0.0100	n/a	n/a	-0.0468
B2(LH)	A1&A2&B1&C1&C2	0.0100	n/a	n/a	-0.0362
C2(HL)	!A1&!A2&!B1&!B2&!C1	0.0100	n/a	n/a	0.0665
C2(HL)	!A1&!A2&!B1&B2&!C1	0.0100	n/a	n/a	0.0664
C2(HL)	!A1&!A2&B1&!B2&!C1	0.0100	n/a	n/a	0.0664
C2(HL)	!A1&A2&!B1&!B2&!C1	0.0100	n/a	n/a	0.0665
C2(HL)	!A1&A2&!B1&B2&!C1	0.0100	n/a	n/a	0.0664
C2(HL)	!A1&A2&B1&!B2&!C1	0.0100	n/a	n/a	0.0664
C2(HL)	A1&!A2&!B1&!B2&!C1	0.0100	n/a	n/a	0.0665
C2(HL)	A1&!A2&!B1&B2&!C1	0.0100	n/a	n/a	0.0664
C2(HL)	A1&!A2&B1&!B2&!C1	0.0100	n/a	n/a	0.0664
C2(HL)	!A1&!A2&B1&B2&!C1	0.0100	n/a	n/a	0.0597
C2(HL)	!A1&!A2&B1&B2&C1	0.0100	n/a	n/a	0.0597
C2(HL)	!A1&A2&B1&B2&!C1	0.0100	n/a	n/a	0.0597
C2(HL)	!A1&A2&B1&B2&C1	0.0100	n/a	n/a	0.0597
C2(HL)	A1&!A2&B1&B2&!C1	0.0100	n/a	n/a	0.0597
C2(HL)	A1&!A2&B1&B2&C1	0.0100	n/a	n/a	0.0597
C2(HL)	A1&A2&!B1&!B2&!C1	0.0100	n/a	n/a	0.0598
C2(HL)	A1&A2&!B1&!B2&C1	0.0100	n/a	n/a	0.0600
C2(HL)	A1&A2&!B1&B2&!C1	0.0100	n/a	n/a	0.0597
C2(HL)	A1&A2&!B1&B2&C1	0.0100	n/a	n/a	0.0599
C2(HL)	A1&A2&B1&!B2&!C1	0.0100	n/a	n/a	0.0597
C2(HL)	A1&A2&B1&!B2&C1	0.0100	n/a	n/a	0.0599
C2(HL)	A1&A2&B1&B2&!C1	0.0100	n/a	n/a	0.0597
C2(HL)	A1&A2&B1&B2&C1	0.0100	n/a	n/a	0.0597
B2(HL)	!A1&!A2&!B1&!C1&!C2	0.0100	n/a	n/a	0.0666
B2(HL)	!A1&!A2&!B1&!C1&C2	0.0100	n/a	n/a	0.0665
B2(HL)	!A1&!A2&!B1&C1&!C2	0.0100	n/a	n/a	0.0666
B2(HL)	!A1&A2&!B1&!C1&!C2	0.0100	n/a	n/a	0.0667
B2(HL)	!A1&A2&!B1&!C1&C2	0.0100	n/a	n/a	0.0666
B2(HL)	!A1&A2&!B1&C1&!C2	0.0100	n/a	n/a	0.0666
B2(HL)	A1&!A2&!B1&!C1&!C2	0.0100	n/a	n/a	0.0667
B2(HL)	A1&!A2&!B1&!C1&C2	0.0100	n/a	n/a	0.0666
B2(HL)	A1&!A2&!B1&C1&!C2	0.0100	n/a	n/a	0.0666
B2(HL)	!A1&!A2&!B1&C1&C2	0.0100	n/a	n/a	0.0195
B2(HL)	!A1&!A2&B1&C1&C2	0.0100	n/a	n/a	0.0599
B2(HL)	!A1&A2&!B1&C1&C2	0.0100	n/a	n/a	0.0195
B2(HL)	!A1&A2&B1&C1&C2	0.0100	n/a	n/a	0.0597
B2(HL)	A1&!A2&!B1&C1&C2	0.0100	n/a	n/a	0.0196
B2(HL)	A1&!A2&B1&C1&C2	0.0100	n/a	n/a	0.0597
B2(HL)	A1&A2&!B1&!C1&!C2	0.0100	n/a	n/a	0.0599
B2(HL)	A1&A2&!B1&!C1&C2	0.0100	n/a	n/a	0.0598
B2(HL)	A1&A2&!B1&C1&!C2	0.0100	n/a	n/a	0.0598
B2(HL)	A1&A2&!B1&C1&C2	0.0100	n/a	n/a	0.0328
B2(HL)	A1&A2&B1&!C1&!C2	0.0100	n/a	n/a	0.0600
B2(HL)	A1&A2&B1&!C1&C2	0.0100	n/a	n/a	0.0599
B2(HL)	A1&A2&B1&C1&!C2	0.0100	n/a	n/a	0.0599
B2(HL)	A1&A2&B1&C1&C2	0.0100	n/a	n/a	0.0351
C2(LH)	!A1&!A2&!B1&!B2&!C1	0.0100	n/a	n/a	-0.0596
C2(LH)	!A1&!A2&!B1&B2&!C1	0.0100	n/a	n/a	-0.0596

continues on next page

Table 179 – continued from previous page

C2(LH)	!A1&!A2&B1&!B2&!C1	0.0100	n/a	n/a	-0.0596
C2(LH)	!A1&A2&!B1&!B2&!C1	0.0100	n/a	n/a	-0.0595
C2(LH)	!A1&A2&!B1&B2&!C1	0.0100	n/a	n/a	-0.0595
C2(LH)	!A1&A2&B1&!B2&!C1	0.0100	n/a	n/a	-0.0595
C2(LH)	A1&!A2&!B1&!B2&!C1	0.0100	n/a	n/a	-0.0595
C2(LH)	A1&!A2&!B1&B2&!C1	0.0100	n/a	n/a	-0.0595
C2(LH)	A1&!A2&B1&!B2&!C1	0.0100	n/a	n/a	-0.0595
C2(LH)	!A1&!A2&B1&B2&!C1	0.0100	n/a	n/a	-0.0593
C2(LH)	!A1&!A2&B1&B2&C1	0.0100	n/a	n/a	-0.0509
C2(LH)	!A1&A2&B1&B2&!C1	0.0100	n/a	n/a	-0.0593
C2(LH)	!A1&A2&B1&B2&C1	0.0100	n/a	n/a	-0.0509
C2(LH)	A1&!A2&B1&B2&!C1	0.0100	n/a	n/a	-0.0593
C2(LH)	A1&!A2&B1&B2&C1	0.0100	n/a	n/a	-0.0509
C2(LH)	A1&A2&!B1&!B2&!C1	0.0100	n/a	n/a	-0.0594
C2(LH)	A1&A2&!B1&!B2&C1	0.0100	n/a	n/a	-0.0478
C2(LH)	A1&A2&!B1&B2&!C1	0.0100	n/a	n/a	-0.0594
C2(LH)	A1&A2&!B1&B2&C1	0.0100	n/a	n/a	-0.0491
C2(LH)	A1&A2&B1&!B2&!C1	0.0100	n/a	n/a	-0.0594
C2(LH)	A1&A2&B1&!B2&C1	0.0100	n/a	n/a	-0.0491
C2(LH)	A1&A2&B1&B2&!C1	0.0100	n/a	n/a	-0.0593
C2(LH)	A1&A2&B1&B2&C1	0.0100	n/a	n/a	-0.0523
A2(LH)	!A1&!B1&!B2&!C1&!C2	0.0100	n/a	n/a	-0.0602
A2(LH)	!A1&!B1&!B2&!C1&C2	0.0100	n/a	n/a	-0.0601
A2(LH)	!A1&!B1&!B2&C1&!C2	0.0100	n/a	n/a	-0.0601
A2(LH)	!A1&!B1&B2&!C1&!C2	0.0100	n/a	n/a	-0.0601
A2(LH)	!A1&!B1&B2&!C1&C2	0.0100	n/a	n/a	-0.0601
A2(LH)	!A1&!B1&B2&C1&!C2	0.0100	n/a	n/a	-0.0601
A2(LH)	!A1&B1&!B2&!C1&!C2	0.0100	n/a	n/a	-0.0601
A2(LH)	!A1&B1&!B2&!C1&C2	0.0100	n/a	n/a	-0.0601
A2(LH)	!A1&B1&!B2&C1&!C2	0.0100	n/a	n/a	-0.0601
A2(LH)	!A1&!B1&!B2&C1&C2	0.0100	n/a	n/a	-0.0151
A2(LH)	!A1&!B1&B2&C1&C2	0.0100	n/a	n/a	-0.0151
A2(LH)	!A1&B1&!B2&C1&C2	0.0100	n/a	n/a	-0.0151
A2(LH)	!A1&B1&B2&!C1&!C2	0.0100	n/a	n/a	-0.0152
A2(LH)	!A1&B1&B2&!C1&C2	0.0100	n/a	n/a	-0.0152
A2(LH)	!A1&B1&B2&C1&!C2	0.0100	n/a	n/a	-0.0152
A2(LH)	!A1&B1&B2&C1&C2	0.0100	n/a	n/a	-0.0152
A2(LH)	A1&!B1&!B2&C1&C2	0.0100	n/a	n/a	-0.0157
A2(LH)	A1&!B1&B2&C1&C2	0.0100	n/a	n/a	-0.0157
A2(LH)	A1&B1&!B2&C1&C2	0.0100	n/a	n/a	-0.0157
A2(LH)	A1&B1&B2&!C1&!C2	0.0100	n/a	n/a	-0.0158
A2(LH)	A1&B1&B2&!C1&C2	0.0100	n/a	n/a	-0.0158
A2(LH)	A1&B1&B2&C1&!C2	0.0100	n/a	n/a	-0.0158
A2(LH)	A1&B1&B2&C1&C2	0.0100	n/a	n/a	-0.0158
A1(LH)	!A2&!B1&!B2&!C1&!C2	0.0100	n/a	n/a	-0.0451
A1(LH)	!A2&!B1&!B2&!C1&C2	0.0100	n/a	n/a	-0.0452
A1(LH)	!A2&!B1&!B2&C1&!C2	0.0100	n/a	n/a	-0.0452
A1(LH)	!A2&!B1&B2&!C1&!C2	0.0100	n/a	n/a	-0.0451
A1(LH)	!A2&!B1&B2&!C1&C2	0.0100	n/a	n/a	-0.0451
A1(LH)	!A2&!B1&B2&C1&!C2	0.0100	n/a	n/a	-0.0451
A1(LH)	!A2&B1&!B2&!C1&!C2	0.0100	n/a	n/a	-0.0451
A1(LH)	!A2&B1&!B2&!C1&C2	0.0100	n/a	n/a	-0.0451

continues on next page

Table 179 – continued from previous page

A1(LH)	!A2&B1&!B2&C1&!C2	0.0100	n/a	n/a	-0.0451
A1(LH)	!A2&!B1&!B2&C1&C2	0.0100	n/a	n/a	-0.0151
A1(LH)	!A2&!B1&B2&C1&C2	0.0100	n/a	n/a	-0.0151
A1(LH)	!A2&B1&!B2&C1&C2	0.0100	n/a	n/a	-0.0151
A1(LH)	!A2&B1&B2&!C1&!C2	0.0100	n/a	n/a	-0.0152
A1(LH)	!A2&B1&B2&!C1&C2	0.0100	n/a	n/a	-0.0152
A1(LH)	!A2&B1&B2&C1&!C2	0.0100	n/a	n/a	-0.0152
A1(LH)	!A2&B1&B2&C1&C2	0.0100	n/a	n/a	-0.0153
A1(LH)	A2&!B1&!B2&C1&C2	0.0100	n/a	n/a	-0.0157
A1(LH)	A2&!B1&B2&C1&C2	0.0100	n/a	n/a	-0.0157
A1(LH)	A2&B1&!B2&C1&C2	0.0100	n/a	n/a	-0.0157
A1(LH)	A2&B1&B2&!C1&!C2	0.0100	n/a	n/a	-0.0158
A1(LH)	A2&B1&B2&!C1&C2	0.0100	n/a	n/a	-0.0158
A1(LH)	A2&B1&B2&C1&!C2	0.0100	n/a	n/a	-0.0158
A1(LH)	A2&B1&B2&C1&C2	0.0100	n/a	n/a	-0.0158
C1(LH)	!A1&!A2&!B1&!B2&!C2	0.0100	n/a	n/a	-0.0464
C1(LH)	!A1&!A2&!B1&B2&!C2	0.0100	n/a	n/a	-0.0463
C1(LH)	!A1&!A2&B1&!B2&!C2	0.0100	n/a	n/a	-0.0463
C1(LH)	!A1&A2&!B1&!B2&!C2	0.0100	n/a	n/a	-0.0464
C1(LH)	!A1&A2&!B1&B2&!C2	0.0100	n/a	n/a	-0.0463
C1(LH)	!A1&A2&B1&!B2&!C2	0.0100	n/a	n/a	-0.0463
C1(LH)	A1&!A2&!B1&!B2&!C2	0.0100	n/a	n/a	-0.0464
C1(LH)	A1&!A2&!B1&B2&!C2	0.0100	n/a	n/a	-0.0463
C1(LH)	A1&!A2&B1&!B2&!C2	0.0100	n/a	n/a	-0.0463
C1(LH)	!A1&!A2&B1&B2&!C2	0.0100	n/a	n/a	-0.0593
C1(LH)	!A1&!A2&B1&B2&C2	0.0100	n/a	n/a	-0.0509
C1(LH)	!A1&A2&B1&B2&!C2	0.0100	n/a	n/a	-0.0593
C1(LH)	!A1&A2&B1&B2&C2	0.0100	n/a	n/a	-0.0509
C1(LH)	A1&!A2&B1&B2&!C2	0.0100	n/a	n/a	-0.0593
C1(LH)	A1&!A2&B1&B2&C2	0.0100	n/a	n/a	-0.0509
C1(LH)	A1&A2&!B1&!B2&!C2	0.0100	n/a	n/a	-0.0594
C1(LH)	A1&A2&!B1&!B2&C2	0.0100	n/a	n/a	-0.0479
C1(LH)	A1&A2&!B1&B2&!C2	0.0100	n/a	n/a	-0.0594
C1(LH)	A1&A2&!B1&B2&C2	0.0100	n/a	n/a	-0.0491
C1(LH)	A1&A2&B1&!B2&!C2	0.0100	n/a	n/a	-0.0594
C1(LH)	A1&A2&B1&!B2&C2	0.0100	n/a	n/a	-0.0491
C1(LH)	A1&A2&B1&B2&!C2	0.0100	n/a	n/a	-0.0593
C1(LH)	A1&A2&B1&B2&C2	0.0100	n/a	n/a	-0.0523
A2(HL)	!A1&!B1&!B2&!C1&!C2	0.0100	n/a	n/a	0.0666
A2(HL)	!A1&!B1&!B2&!C1&C2	0.0100	n/a	n/a	0.0665
A2(HL)	!A1&!B1&!B2&C1&!C2	0.0100	n/a	n/a	0.0665
A2(HL)	!A1&!B1&B2&!C1&!C2	0.0100	n/a	n/a	0.0665
A2(HL)	!A1&!B1&B2&!C1&C2	0.0100	n/a	n/a	0.0665
A2(HL)	!A1&!B1&B2&C1&!C2	0.0100	n/a	n/a	0.0665
A2(HL)	!A1&B1&!B2&!C1&!C2	0.0100	n/a	n/a	0.0665
A2(HL)	!A1&B1&!B2&!C1&C2	0.0100	n/a	n/a	0.0665
A2(HL)	!A1&B1&!B2&C1&!C2	0.0100	n/a	n/a	0.0665
A2(HL)	!A1&!B1&!B2&C1&C2	0.0100	n/a	n/a	0.0156
A2(HL)	!A1&!B1&B2&C1&C2	0.0100	n/a	n/a	0.0156
A2(HL)	!A1&B1&!B2&C1&C2	0.0100	n/a	n/a	0.0156
A2(HL)	!A1&B1&B2&!C1&!C2	0.0100	n/a	n/a	0.0157
A2(HL)	!A1&B1&B2&!C1&C2	0.0100	n/a	n/a	0.0157

continues on next page

Table 179 – continued from previous page

A2(HL)	!A1&B1&B2&C1&!C2	0.0100	n/a	n/a	0.0157
A2(HL)	!A1&B1&B2&C1&C2	0.0100	n/a	n/a	0.0157
A2(HL)	A1&!B1&!B2&C1&C2	0.0100	n/a	n/a	0.1521
A2(HL)	A1&!B1&B2&C1&C2	0.0100	n/a	n/a	0.1429
A2(HL)	A1&B1&!B2&C1&C2	0.0100	n/a	n/a	0.1429
A2(HL)	A1&B1&B2&!C1&!C2	0.0100	n/a	n/a	0.0820
A2(HL)	A1&B1&B2&!C1&C2	0.0100	n/a	n/a	0.0820
A2(HL)	A1&B1&B2&C1&!C2	0.0100	n/a	n/a	0.0820
A2(HL)	A1&B1&B2&C1&C2	0.0100	n/a	n/a	0.0820
B1(HL)	!A1&!A2&!B2&!C1&!C2	0.0100	n/a	n/a	0.0672
B1(HL)	!A1&!A2&!B2&!C1&C2	0.0100	n/a	n/a	0.0671
B1(HL)	!A1&!A2&!B2&C1&!C2	0.0100	n/a	n/a	0.0671
B1(HL)	!A1&A2&!B2&!C1&!C2	0.0100	n/a	n/a	0.0672
B1(HL)	!A1&A2&!B2&!C1&C2	0.0100	n/a	n/a	0.0671
B1(HL)	!A1&A2&!B2&C1&!C2	0.0100	n/a	n/a	0.0671
B1(HL)	A1&!A2&!B2&!C1&!C2	0.0100	n/a	n/a	0.0672
B1(HL)	A1&!A2&!B2&!C1&C2	0.0100	n/a	n/a	0.0671
B1(HL)	A1&!A2&!B2&C1&!C2	0.0100	n/a	n/a	0.0672
B1(HL)	!A1&!A2&!B2&C1&C2	0.0100	n/a	n/a	0.0195
B1(HL)	!A1&!A2&B2&C1&C2	0.0100	n/a	n/a	0.0599
B1(HL)	!A1&A2&!B2&C1&C2	0.0100	n/a	n/a	0.0195
B1(HL)	!A1&A2&B2&C1&C2	0.0100	n/a	n/a	0.0596
B1(HL)	A1&!A2&!B2&C1&C2	0.0100	n/a	n/a	0.0195
B1(HL)	A1&!A2&B2&C1&C2	0.0100	n/a	n/a	0.0596
B1(HL)	A1&A2&!B2&!C1&!C2	0.0100	n/a	n/a	0.0598
B1(HL)	A1&A2&!B2&!C1&C2	0.0100	n/a	n/a	0.0598
B1(HL)	A1&A2&!B2&C1&!C2	0.0100	n/a	n/a	0.0597
B1(HL)	A1&A2&!B2&C1&C2	0.0100	n/a	n/a	0.0328
B1(HL)	A1&A2&B2&!C1&!C2	0.0100	n/a	n/a	0.0599
B1(HL)	A1&A2&B2&!C1&C2	0.0100	n/a	n/a	0.0599
B1(HL)	A1&A2&B2&C1&!C2	0.0100	n/a	n/a	0.0599
B1(HL)	A1&A2&B2&C1&C2	0.0100	n/a	n/a	0.0350
C1(HL)	!A1&!A2&!B1&!B2&!C2	0.0100	n/a	n/a	0.0671
C1(HL)	!A1&!A2&!B1&B2&!C2	0.0100	n/a	n/a	0.0671
C1(HL)	!A1&!A2&B1&!B2&!C2	0.0100	n/a	n/a	0.0671
C1(HL)	!A1&A2&!B1&!B2&!C2	0.0100	n/a	n/a	0.0671
C1(HL)	!A1&A2&!B1&B2&!C2	0.0100	n/a	n/a	0.0671
C1(HL)	!A1&A2&B1&!B2&!C2	0.0100	n/a	n/a	0.0671
C1(HL)	A1&!A2&!B1&!B2&!C2	0.0100	n/a	n/a	0.0671
C1(HL)	A1&!A2&!B1&B2&!C2	0.0100	n/a	n/a	0.0671
C1(HL)	A1&!A2&B1&!B2&!C2	0.0100	n/a	n/a	0.0671
C1(HL)	!A1&!A2&B1&B2&!C2	0.0100	n/a	n/a	0.0597
C1(HL)	!A1&!A2&B1&B2&C2	0.0100	n/a	n/a	0.0596
C1(HL)	!A1&A2&B1&B2&!C2	0.0100	n/a	n/a	0.0597
C1(HL)	!A1&A2&B1&B2&C2	0.0100	n/a	n/a	0.0596
C1(HL)	A1&!A2&B1&B2&!C2	0.0100	n/a	n/a	0.0597
C1(HL)	A1&!A2&B1&B2&C2	0.0100	n/a	n/a	0.0596
C1(HL)	A1&A2&!B1&!B2&!C2	0.0100	n/a	n/a	0.0597
C1(HL)	A1&A2&!B1&!B2&C2	0.0100	n/a	n/a	0.0600
C1(HL)	A1&A2&!B1&B2&!C2	0.0100	n/a	n/a	0.0597
C1(HL)	A1&A2&!B1&B2&C2	0.0100	n/a	n/a	0.0598
C1(HL)	A1&A2&B1&!B2&!C2	0.0100	n/a	n/a	0.0597

continues on next page

Table 179 – continued from previous page

C1(HL)	A1&A2&B1&!B2&C2	0.0100	n/a	n/a	0.0599
C1(HL)	A1&A2&B1&B2&!C2	0.0100	n/a	n/a	0.0597
C1(HL)	A1&A2&B1&B2&C2	0.0100	n/a	n/a	0.0596
A1(HL)	!A2&!B1&!B2&!C1&!C2	0.0100	n/a	n/a	0.0673
A1(HL)	!A2&!B1&!B2&!C1&C2	0.0100	n/a	n/a	0.0673
A1(HL)	!A2&!B1&!B2&C1&!C2	0.0100	n/a	n/a	0.0673
A1(HL)	!A2&!B1&B2&!C1&!C2	0.0100	n/a	n/a	0.0673
A1(HL)	!A2&!B1&B2&!C1&C2	0.0100	n/a	n/a	0.0673
A1(HL)	!A2&!B1&B2&C1&!C2	0.0100	n/a	n/a	0.0673
A1(HL)	!A2&B1&!B2&!C1&!C2	0.0100	n/a	n/a	0.0673
A1(HL)	!A2&B1&!B2&!C1&C2	0.0100	n/a	n/a	0.0673
A1(HL)	!A2&B1&!B2&C1&!C2	0.0100	n/a	n/a	0.0673
A1(HL)	!A2&!B1&!B2&C1&C2	0.0100	n/a	n/a	0.0155
A1(HL)	!A2&!B1&B2&C1&C2	0.0100	n/a	n/a	0.0156
A1(HL)	!A2&B1&!B2&C1&C2	0.0100	n/a	n/a	0.0156
A1(HL)	!A2&B1&B2&!C1&!C2	0.0100	n/a	n/a	0.0156
A1(HL)	!A2&B1&B2&!C1&C2	0.0100	n/a	n/a	0.0156
A1(HL)	!A2&B1&B2&C1&!C2	0.0100	n/a	n/a	0.0156
A1(HL)	!A2&B1&B2&C1&C2	0.0100	n/a	n/a	0.0156
A1(HL)	A2&!B1&!B2&C1&C2	0.0100	n/a	n/a	0.1521
A1(HL)	A2&!B1&B2&C1&C2	0.0100	n/a	n/a	0.1430
A1(HL)	A2&B1&!B2&C1&C2	0.0100	n/a	n/a	0.1428
A1(HL)	A2&B1&B2&!C1&!C2	0.0100	n/a	n/a	0.0820
A1(HL)	A2&B1&B2&!C1&C2	0.0100	n/a	n/a	0.0820
A1(HL)	A2&B1&B2&C1&!C2	0.0100	n/a	n/a	0.0820
A1(HL)	A2&B1&B2&C1&C2	0.0100	n/a	n/a	0.0820
B1(LH)	!A1&!A2&!B2&!C1&!C2	0.0100	n/a	n/a	-0.0449
B1(LH)	!A1&!A2&!B2&!C1&C2	0.0100	n/a	n/a	-0.0450
B1(LH)	!A1&!A2&!B2&C1&!C2	0.0100	n/a	n/a	-0.0450
B1(LH)	!A1&A2&!B2&!C1&!C2	0.0100	n/a	n/a	-0.0449
B1(LH)	!A1&A2&!B2&!C1&C2	0.0100	n/a	n/a	-0.0449
B1(LH)	!A1&A2&!B2&C1&!C2	0.0100	n/a	n/a	-0.0449
B1(LH)	A1&!A2&!B2&!C1&!C2	0.0100	n/a	n/a	-0.0449
B1(LH)	A1&!A2&!B2&!C1&C2	0.0100	n/a	n/a	-0.0449
B1(LH)	A1&!A2&!B2&C1&!C2	0.0100	n/a	n/a	-0.0449
B1(LH)	!A1&!A2&!B2&C1&C2	0.0100	n/a	n/a	-0.0178
B1(LH)	!A1&!A2&B2&C1&C2	0.0100	n/a	n/a	-0.0188
B1(LH)	!A1&A2&!B2&C1&C2	0.0100	n/a	n/a	-0.0179
B1(LH)	!A1&A2&B2&C1&C2	0.0100	n/a	n/a	-0.0188
B1(LH)	A1&!A2&!B2&C1&C2	0.0100	n/a	n/a	-0.0179
B1(LH)	A1&!A2&B2&C1&C2	0.0100	n/a	n/a	-0.0188
B1(LH)	A1&A2&!B2&!C1&!C2	0.0100	n/a	n/a	-0.0596
B1(LH)	A1&A2&!B2&!C1&C2	0.0100	n/a	n/a	-0.0596
B1(LH)	A1&A2&!B2&C1&!C2	0.0100	n/a	n/a	-0.0596
B1(LH)	A1&A2&!B2&C1&C2	0.0100	n/a	n/a	-0.0342
B1(LH)	A1&A2&B2&!C1&!C2	0.0100	n/a	n/a	-0.0473
B1(LH)	A1&A2&B2&!C1&C2	0.0100	n/a	n/a	-0.0468
B1(LH)	A1&A2&B2&C1&!C2	0.0100	n/a	n/a	-0.0468
B1(LH)	A1&A2&B2&C1&C2	0.0100	n/a	n/a	-0.0362

LEAKAGE POWER

When Condition	Power (nW)
!A1&!A2&!B1&!B2&!C1&!C2	0.1258
!A1&!A2&!B1&!B2&!C1&C2	0.1261
!A1&!A2&!B1&!B2&C1&!C2	0.1659
!A1&!A2&!B1&B2&!C1&!C2	0.1261
!A1&!A2&!B1&B2&!C1&C2	0.1264
!A1&!A2&!B1&B2&C1&!C2	0.1662
!A1&!A2&B1&!B2&!C1&!C2	0.1659
!A1&!A2&B1&!B2&!C1&C2	0.1662
!A1&!A2&B1&!B2&C1&!C2	0.2060
!A1&A2&!B1&!B2&!C1&!C2	0.1261
!A1&A2&!B1&!B2&!C1&C2	0.1264
!A1&A2&!B1&!B2&C1&!C2	0.1662
!A1&A2&!B1&B2&!C1&!C2	0.1264
!A1&A2&!B1&B2&!C1&C2	0.1267
!A1&A2&!B1&B2&C1&!C2	0.1665
!A1&A2&B1&!B2&!C1&!C2	0.1662
!A1&A2&B1&!B2&!C1&C2	0.1665
!A1&A2&B1&!B2&C1&!C2	0.2063
A1&!A2&!B1&!B2&!C1&!C2	0.1659
A1&!A2&!B1&!B2&!C1&C2	0.1662
A1&!A2&!B1&!B2&C1&!C2	0.2060
A1&!A2&!B1&B2&!C1&!C2	0.1662
A1&!A2&!B1&B2&!C1&C2	0.1665
A1&!A2&!B1&B2&C1&!C2	0.2063
A1&!A2&B1&!B2&!C1&!C2	0.2060
A1&!A2&B1&!B2&!C1&C2	0.2063
A1&!A2&B1&!B2&C1&!C2	0.2460
!A1&!A2&!B1&!B2&C1&C2	0.2451
!A1&!A2&!B1&B2&C1&C2	0.2474
!A1&!A2&B1&!B2&C1&C2	0.2474
!A1&!A2&B1&B2&!C1&!C2	0.1746
!A1&!A2&B1&B2&!C1&C2	0.1746
!A1&!A2&B1&B2&C1&!C2	0.1746
!A1&!A2&B1&B2&C1&C2	0.1746
!A1&A2&!B1&!B2&C1&C2	0.2478
!A1&A2&!B1&B2&C1&C2	0.2501
!A1&A2&B1&!B2&C1&C2	0.2501
!A1&A2&B1&B2&!C1&!C2	0.1774
!A1&A2&B1&B2&!C1&C2	0.1774
!A1&A2&B1&B2&C1&!C2	0.1774
!A1&A2&B1&B2&C1&C2	0.1774
A1&!A2&!B1&!B2&C1&C2	0.2478
A1&!A2&!B1&B2&C1&C2	0.2501
A1&!A2&B1&!B2&C1&C2	0.2501
A1&!A2&B1&B2&!C1&!C2	0.1774
A1&!A2&B1&B2&!C1&C2	0.1774
A1&!A2&B1&B2&C1&!C2	0.1774
A1&!A2&B1&B2&C1&C2	0.1774

continues on next page

Table 180 – continued from previous page

A1&A2&!B1&!B2&!C1&!C2	0.1037
A1&A2&!B1&!B2&!C1&C2	0.1037
A1&A2&!B1&!B2&C1&!C2	0.1037
A1&A2&!B1&!B2&C1&C2	0.1038
A1&A2&!B1&B2&!C1&!C2	0.1037
A1&A2&!B1&B2&!C1&C2	0.1037
A1&A2&!B1&B2&C1&!C2	0.1037
A1&A2&!B1&B2&C1&C2	0.1038
A1&A2&B1&!B2&!C1&!C2	0.1037
A1&A2&B1&!B2&!C1&C2	0.1037
A1&A2&B1&!B2&C1&!C2	0.1037
A1&A2&B1&!B2&C1&C2	0.1038
A1&A2&B1&B2&!C1&!C2	0.1038
A1&A2&B1&B2&!C1&C2	0.1038
A1&A2&B1&B2&C1&!C2	0.1038
A1&A2&B1&B2&C1&C2	0.1038

gf180mcu_fd_sc_mcu9t5v0__aoi222_2

gf180mcu_fd_sc_mcu9t5v0__aoi222_2 symbol

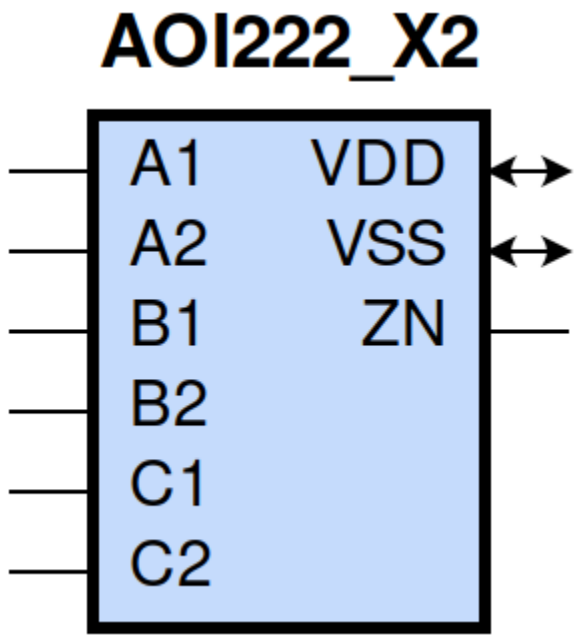

gf180mcu_fd_sc_mcu9t5v0__aoi222_2 schematic

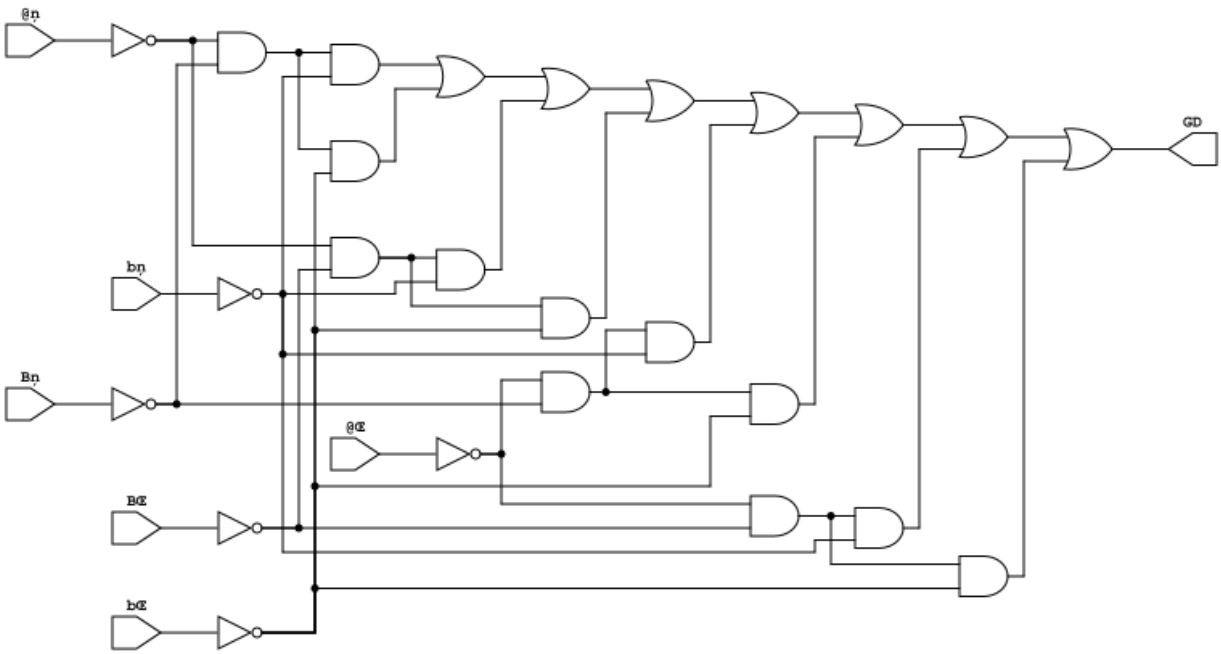

gf180mcu_fd_sc_mcu9t5v0__aoi222_2 layout

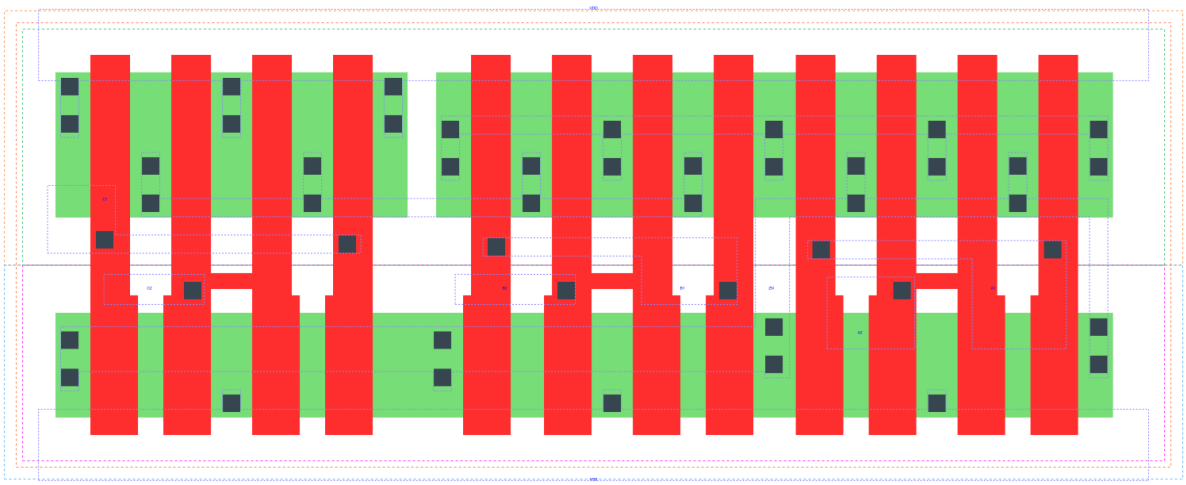

AOI222_X2 is a three 2-input AND into 3-input NOR with 2X drive strength

Attributes

Attribute	Value
area	70.560000 μm^2

OUTPUT FUNCTIONS

Output Pin	Function
ZN	(((!A1)&(!B1)&(!C1))|((!A1)&(!B1)&(!C2))|((!A1)&(!B2)&(!C1))|((!A1)&(!B2)&(!C2))|((!A2)&(!B1)&(!C1))|((!A2)&(!B

TRUTH TABLE FOR ZN

A1	A2	B1	B2	C1	C2	ZN
0	?	0	?	0	?	1
0	?	0	?	?	0	1
0	?	?	0	0	?	1
0	?	?	0	?	0	1
?	0	0	?	0	?	1
?	0	0	?	?	0	1
?	0	?	0	0	?	1
?	0	?	0	?	0	1
1	1	?	?	?	?	0
?	?	1	1	?	?	0
?	?	?	?	1	1	0

FUNCTIONAL SCHEMATIC

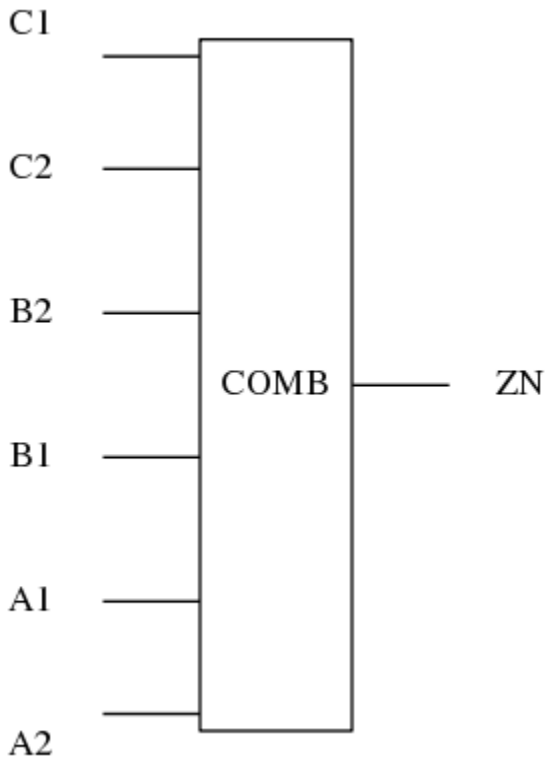

PIN CAPACITANCE (pf)

Pin	Type	Capacitance (pf)
C1	input	0.0140
C2	input	0.0130
B2	input	0.0132
B1	input	0.0142
A1	input	0.0147
A2	input	0.0136

DELAY AND OUTPUT TRANSITION TIME corresponding to min slew and load

Input Pin	Output	When Condition	Tin (ns)	Out Load (pf)	Delay (ns)	Tout (ns)
C1(LH)	ZN(HL)	!A1&!A2&!B1&!B2&C2	0.0100	0.0010	0.1454	0.1045
C1(LH)	ZN(HL)	!A1&!A2&!B1&B2&C2	0.0100	0.0010	0.1356	0.0980
C1(LH)	ZN(HL)	!A1&!A2&B1&!B2&C2	0.0100	0.0010	0.1481	0.1195
C1(LH)	ZN(HL)	!A1&A2&!B1&!B2&C2	0.0100	0.0010	0.1074	0.0893
C1(LH)	ZN(HL)	!A1&A2&!B1&B2&C2	0.0100	0.0010	0.1030	0.0839

continues on next page

Table 181 – continued from previous page

C1(LH)	ZN(HL)	!A1&A2&B1&!B2&C2	0.0100	0.0010	0.1156	0.1074
C1(LH)	ZN(HL)	A1&!A2&!B1&!B2&C2	0.0100	0.0010	0.1208	0.1130
C1(LH)	ZN(HL)	A1&!A2&!B1&B2&C2	0.0100	0.0010	0.1154	0.1068
C1(LH)	ZN(HL)	A1&!A2&B1&!B2&C2	0.0100	0.0010	0.1292	0.1292
C1(HL)	ZN(LH)	!A1&!A2&!B1&!B2&C2	0.0100	0.0010	0.2327	0.1336
C1(HL)	ZN(LH)	!A1&!A2&!B1&B2&C2	0.0100	0.0010	0.2670	0.1640
C1(HL)	ZN(LH)	!A1&!A2&B1&!B2&C2	0.0100	0.0010	0.3188	0.2011
C1(HL)	ZN(LH)	!A1&A2&!B1&!B2&C2	0.0100	0.0010	0.2691	0.1319
C1(HL)	ZN(LH)	!A1&A2&!B1&B2&C2	0.0100	0.0010	0.2982	0.1560
C1(HL)	ZN(LH)	!A1&A2&B1&!B2&C2	0.0100	0.0010	0.3596	0.2005
C1(HL)	ZN(LH)	A1&!A2&!B1&!B2&C2	0.0100	0.0010	0.3201	0.1672
C1(HL)	ZN(LH)	A1&!A2&!B1&B2&C2	0.0100	0.0010	0.3586	0.1999
C1(HL)	ZN(LH)	A1&!A2&B1&!B2&C2	0.0100	0.0010	0.4186	0.2450
C2(LH)	ZN(HL)	!A1&!A2&!B1&!B2&C1	0.0100	0.0010	0.1568	0.1047
C2(LH)	ZN(HL)	!A1&!A2&!B1&B2&C1	0.0100	0.0010	0.1472	0.0976
C2(LH)	ZN(HL)	!A1&!A2&B1&!B2&C1	0.0100	0.0010	0.1597	0.1191
C2(LH)	ZN(HL)	!A1&A2&!B1&!B2&C1	0.0100	0.0010	0.1192	0.0888
C2(LH)	ZN(HL)	!A1&A2&!B1&B2&C1	0.0100	0.0010	0.1148	0.0834
C2(LH)	ZN(HL)	!A1&A2&B1&!B2&C1	0.0100	0.0010	0.1274	0.1067
C2(LH)	ZN(HL)	A1&!A2&!B1&!B2&C1	0.0100	0.0010	0.1325	0.1126
C2(LH)	ZN(HL)	A1&!A2&!B1&B2&C1	0.0100	0.0010	0.1272	0.1062
C2(LH)	ZN(HL)	A1&!A2&B1&!B2&C1	0.0100	0.0010	0.1409	0.1286
C2(HL)	ZN(LH)	!A1&!A2&!B1&!B2&C1	0.0100	0.0010	0.2661	0.1630
C2(HL)	ZN(LH)	!A1&!A2&!B1&B2&C1	0.0100	0.0010	0.3082	0.2011
C2(HL)	ZN(LH)	!A1&!A2&B1&!B2&C1	0.0100	0.0010	0.3580	0.2387
C2(HL)	ZN(LH)	!A1&A2&!B1&!B2&C1	0.0100	0.0010	0.3104	0.1684
C2(HL)	ZN(LH)	!A1&A2&!B1&B2&C1	0.0100	0.0010	0.3471	0.2004
C2(HL)	ZN(LH)	!A1&A2&B1&!B2&C1	0.0100	0.0010	0.4063	0.2454
C2(HL)	ZN(LH)	A1&!A2&!B1&!B2&C1	0.0100	0.0010	0.3593	0.2044
C2(HL)	ZN(LH)	A1&!A2&!B1&B2&C1	0.0100	0.0010	0.4049	0.2445
C2(HL)	ZN(LH)	A1&!A2&B1&!B2&C1	0.0100	0.0010	0.4636	0.2898
B2(HL)	ZN(LH)	!A1&!A2&B1&!C1&!C2	0.0100	0.0010	0.2154	0.1533
B2(HL)	ZN(LH)	!A1&!A2&B1&!C1&C2	0.0100	0.0010	0.2605	0.2012
B2(HL)	ZN(LH)	!A1&!A2&B1&C1&!C2	0.0100	0.0010	0.3095	0.2385
B2(HL)	ZN(LH)	!A1&A2&B1&!C1&!C2	0.0100	0.0010	0.2536	0.1615
B2(HL)	ZN(LH)	!A1&A2&B1&!C1&C2	0.0100	0.0010	0.2998	0.2007
B2(HL)	ZN(LH)	!A1&A2&B1&C1&!C2	0.0100	0.0010	0.3577	0.2452
B2(HL)	ZN(LH)	A1&!A2&B1&!C1&!C2	0.0100	0.0010	0.3020	0.1982
B2(HL)	ZN(LH)	A1&!A2&B1&!C1&C2	0.0100	0.0010	0.3576	0.2450
B2(HL)	ZN(LH)	A1&!A2&B1&C1&!C2	0.0100	0.0010	0.4153	0.2897
B2(LH)	ZN(HL)	!A1&!A2&B1&!C1&!C2	0.0100	0.0010	0.1302	0.0765
B2(LH)	ZN(HL)	!A1&!A2&B1&!C1&C2	0.0100	0.0010	0.1305	0.0765
B2(LH)	ZN(HL)	!A1&!A2&B1&C1&!C2	0.0100	0.0010	0.1400	0.0949
B2(LH)	ZN(HL)	!A1&A2&B1&!C1&!C2	0.0100	0.0010	0.1097	0.0674
B2(LH)	ZN(HL)	!A1&A2&B1&!C1&C2	0.0100	0.0010	0.1100	0.0674
B2(LH)	ZN(HL)	!A1&A2&B1&C1&!C2	0.0100	0.0010	0.1193	0.0868
B2(LH)	ZN(HL)	A1&!A2&B1&!C1&!C2	0.0100	0.0010	0.1190	0.0867
B2(LH)	ZN(HL)	A1&!A2&B1&!C1&C2	0.0100	0.0010	0.1193	0.0867
B2(LH)	ZN(HL)	A1&!A2&B1&C1&!C2	0.0100	0.0010	0.1304	0.1056
B1(LH)	ZN(HL)	!A1&!A2&B2&!C1&!C2	0.0100	0.0010	0.1186	0.0763
B1(LH)	ZN(HL)	!A1&!A2&B2&!C1&C2	0.0100	0.0010	0.1188	0.0766
B1(LH)	ZN(HL)	!A1&!A2&B2&C1&!C2	0.0100	0.0010	0.1282	0.0951

continues on next page

Table 181 – continued from previous page

B1(LH)	ZN(HL)	!A1&A2&B2&!C1&!C2	0.0100	0.0010	0.0979	0.0677
B1(LH)	ZN(HL)	!A1&A2&B2&!C1&C2	0.0100	0.0010	0.0982	0.0679
B1(LH)	ZN(HL)	!A1&A2&B2&C1&!C2	0.0100	0.0010	0.1075	0.0871
B1(LH)	ZN(HL)	A1&!A2&B2&!C1&!C2	0.0100	0.0010	0.1073	0.0869
B1(LH)	ZN(HL)	A1&!A2&B2&!C1&C2	0.0100	0.0010	0.1075	0.0871
B1(LH)	ZN(HL)	A1&!A2&B2&C1&!C2	0.0100	0.0010	0.1186	0.1060
B1(HL)	ZN(LH)	!A1&!A2&B2&!C1&!C2	0.0100	0.0010	0.1821	0.1229
B1(HL)	ZN(LH)	!A1&!A2&B2&!C1&C2	0.0100	0.0010	0.2192	0.1632
B1(HL)	ZN(LH)	!A1&!A2&B2&C1&!C2	0.0100	0.0010	0.2695	0.2003
B1(HL)	ZN(LH)	!A1&A2&B2&!C1&!C2	0.0100	0.0010	0.2128	0.1237
B1(HL)	ZN(LH)	!A1&A2&B2&!C1&C2	0.0100	0.0010	0.2504	0.1553
B1(HL)	ZN(LH)	!A1&A2&B2&C1&!C2	0.0100	0.0010	0.3105	0.1999
B1(HL)	ZN(LH)	A1&!A2&B2&!C1&!C2	0.0100	0.0010	0.2623	0.1605
B1(HL)	ZN(LH)	A1&!A2&B2&!C1&C2	0.0100	0.0010	0.3104	0.1997
B1(HL)	ZN(LH)	A1&!A2&B2&C1&!C2	0.0100	0.0010	0.3691	0.2441
A1(HL)	ZN(LH)	A2&!B1&!B2&!C1&!C2	0.0100	0.0010	0.1103	0.0906
A1(HL)	ZN(LH)	A2&!B1&!B2&!C1&C2	0.0100	0.0010	0.1186	0.1113
A1(HL)	ZN(LH)	A2&!B1&!B2&C1&!C2	0.0100	0.0010	0.1646	0.1542
A1(HL)	ZN(LH)	A2&!B1&B2&!C1&!C2	0.0100	0.0010	0.1317	0.1176
A1(HL)	ZN(LH)	A2&!B1&B2&!C1&C2	0.0100	0.0010	0.1413	0.1418
A1(HL)	ZN(LH)	A2&!B1&B2&C1&!C2	0.0100	0.0010	0.1982	0.1924
A1(HL)	ZN(LH)	A2&B1&!B2&!C1&!C2	0.0100	0.0010	0.1812	0.1582
A1(HL)	ZN(LH)	A2&B1&!B2&!C1&C2	0.0100	0.0010	0.1993	0.1932
A1(HL)	ZN(LH)	A2&B1&!B2&C1&!C2	0.0100	0.0010	0.2575	0.2411
A1(LH)	ZN(HL)	A2&!B1&!B2&!C1&!C2	0.0100	0.0010	0.0673	0.0415
A1(LH)	ZN(HL)	A2&!B1&!B2&!C1&C2	0.0100	0.0010	0.0673	0.0414
A1(LH)	ZN(HL)	A2&!B1&!B2&C1&!C2	0.0100	0.0010	0.0725	0.0576
A1(LH)	ZN(HL)	A2&!B1&B2&!C1&!C2	0.0100	0.0010	0.0676	0.0415
A1(LH)	ZN(HL)	A2&!B1&B2&!C1&C2	0.0100	0.0010	0.0676	0.0414
A1(LH)	ZN(HL)	A2&!B1&B2&C1&!C2	0.0100	0.0010	0.0728	0.0575
A1(LH)	ZN(HL)	A2&B1&!B2&!C1&!C2	0.0100	0.0010	0.0728	0.0579
A1(LH)	ZN(HL)	A2&B1&!B2&!C1&C2	0.0100	0.0010	0.0728	0.0579
A1(LH)	ZN(HL)	A2&B1&!B2&C1&!C2	0.0100	0.0010	0.0800	0.0746
A2(HL)	ZN(LH)	A1&!B1&!B2&!C1&!C2	0.0100	0.0010	0.1410	0.1220
A2(HL)	ZN(LH)	A1&!B1&!B2&!C1&C2	0.0100	0.0010	0.1550	0.1528
A2(HL)	ZN(LH)	A1&!B1&!B2&C1&!C2	0.0100	0.0010	0.2015	0.1944
A2(HL)	ZN(LH)	A1&!B1&B2&!C1&!C2	0.0100	0.0010	0.1704	0.1569
A2(HL)	ZN(LH)	A1&!B1&B2&!C1&C2	0.0100	0.0010	0.1865	0.1908
A2(HL)	ZN(LH)	A1&!B1&B2&C1&!C2	0.0100	0.0010	0.2435	0.2393
A2(HL)	ZN(LH)	A1&B1&!B2&!C1&!C2	0.0100	0.0010	0.2193	0.1963
A2(HL)	ZN(LH)	A1&B1&!B2&!C1&C2	0.0100	0.0010	0.2446	0.2401
A2(HL)	ZN(LH)	A1&B1&!B2&C1&!C2	0.0100	0.0010	0.3017	0.2870
A2(LH)	ZN(HL)	A1&!B1&!B2&!C1&!C2	0.0100	0.0010	0.0788	0.0414
A2(LH)	ZN(HL)	A1&!B1&!B2&!C1&C2	0.0100	0.0010	0.0788	0.0414
A2(LH)	ZN(HL)	A1&!B1&!B2&C1&!C2	0.0100	0.0010	0.0840	0.0576
A2(LH)	ZN(HL)	A1&!B1&B2&!C1&!C2	0.0100	0.0010	0.0790	0.0414
A2(LH)	ZN(HL)	A1&!B1&B2&!C1&C2	0.0100	0.0010	0.0790	0.0414
A2(LH)	ZN(HL)	A1&!B1&B2&C1&!C2	0.0100	0.0010	0.0843	0.0576
A2(LH)	ZN(HL)	A1&B1&!B2&!C1&!C2	0.0100	0.0010	0.0843	0.0579
A2(LH)	ZN(HL)	A1&B1&!B2&!C1&C2	0.0100	0.0010	0.0843	0.0579
A2(LH)	ZN(HL)	A1&B1&!B2&C1&!C2	0.0100	0.0010	0.0915	0.0746

DYNAMIC ENERGY

Input Pin	When Condition	Tin (ns)	Output	Out Load (pf)	Energy (uW/MHz)
A1	A2&!B1&!B2&!C1&!C2	0.0100	ZN(LH)	0.0010	0.4889
A1	A2&!B1&!B2&!C1&C2	0.0100	ZN(LH)	0.0010	0.4891
A1	A2&!B1&!B2&C1&!C2	0.0100	ZN(LH)	0.0010	0.6222
A1	A2&!B1&B2&!C1&!C2	0.0100	ZN(LH)	0.0010	0.4885
A1	A2&!B1&B2&!C1&C2	0.0100	ZN(LH)	0.0010	0.4887
A1	A2&!B1&B2&C1&!C2	0.0100	ZN(LH)	0.0010	0.6217
A1	A2&B1&!B2&!C1&!C2	0.0100	ZN(LH)	0.0010	0.6240
A1	A2&B1&!B2&!C1&C2	0.0100	ZN(LH)	0.0010	0.6241
A1	A2&B1&!B2&C1&!C2	0.0100	ZN(LH)	0.0010	0.7558
B2	!A1&!A2&B1&!C1&!C2	0.0100	ZN(LH)	0.0010	0.8278
B2	!A1&!A2&B1&!C1&C2	0.0100	ZN(LH)	0.0010	0.8276
B2	!A1&!A2&B1&C1&!C2	0.0100	ZN(LH)	0.0010	0.9574
B2	!A1&A2&B1&!C1&!C2	0.0100	ZN(LH)	0.0010	0.7613
B2	!A1&A2&B1&!C1&C2	0.0100	ZN(LH)	0.0010	0.7611
B2	!A1&A2&B1&C1&!C2	0.0100	ZN(LH)	0.0010	0.8912
B2	A1&!A2&B1&!C1&!C2	0.0100	ZN(LH)	0.0010	0.8906
B2	A1&!A2&B1&!C1&C2	0.0100	ZN(LH)	0.0010	0.8908
B2	A1&!A2&B1&C1&!C2	0.0100	ZN(LH)	0.0010	1.0204
B1	!A1&!A2&B2&!C1&!C2	0.0100	ZN(HL)	0.0010	0.1697
B1	!A1&!A2&B2&!C1&C2	0.0100	ZN(HL)	0.0010	0.1715
B1	!A1&!A2&B2&C1&!C2	0.0100	ZN(HL)	0.0010	0.1714
B1	!A1&A2&B2&!C1&!C2	0.0100	ZN(HL)	0.0010	0.1500
B1	!A1&A2&B2&!C1&C2	0.0100	ZN(HL)	0.0010	0.1515
B1	!A1&A2&B2&C1&!C2	0.0100	ZN(HL)	0.0010	0.1517
B1	A1&!A2&B2&!C1&!C2	0.0100	ZN(HL)	0.0010	0.1502
B1	A1&!A2&B2&!C1&C2	0.0100	ZN(HL)	0.0010	0.1518
B1	A1&!A2&B2&C1&!C2	0.0100	ZN(HL)	0.0010	0.1517
A2	A1&!B1&!B2&!C1&!C2	0.0100	ZN(LH)	0.0010	0.6019
A2	A1&!B1&!B2&!C1&C2	0.0100	ZN(LH)	0.0010	0.6021
A2	A1&!B1&!B2&C1&!C2	0.0100	ZN(LH)	0.0010	0.7323
A2	A1&!B1&B2&!C1&!C2	0.0100	ZN(LH)	0.0010	0.6017
A2	A1&!B1&B2&!C1&C2	0.0100	ZN(LH)	0.0010	0.6020
A2	A1&!B1&B2&C1&!C2	0.0100	ZN(LH)	0.0010	0.7321
A2	A1&B1&!B2&!C1&!C2	0.0100	ZN(LH)	0.0010	0.7343
A2	A1&B1&!B2&!C1&C2	0.0100	ZN(LH)	0.0010	0.7345
A2	A1&B1&!B2&C1&!C2	0.0100	ZN(LH)	0.0010	0.8643
B1	!A1&!A2&B2&!C1&!C2	0.0100	ZN(LH)	0.0010	0.7109
B1	!A1&!A2&B2&!C1&C2	0.0100	ZN(LH)	0.0010	0.7109
B1	!A1&!A2&B2&C1&!C2	0.0100	ZN(LH)	0.0010	0.8443
B1	!A1&A2&B2&!C1&!C2	0.0100	ZN(LH)	0.0010	0.6444
B1	!A1&A2&B2&!C1&C2	0.0100	ZN(LH)	0.0010	0.6442
B1	!A1&A2&B2&C1&!C2	0.0100	ZN(LH)	0.0010	0.7778
B1	A1&!A2&B2&!C1&!C2	0.0100	ZN(LH)	0.0010	0.7775
B1	A1&!A2&B2&!C1&C2	0.0100	ZN(LH)	0.0010	0.7773
B1	A1&!A2&B2&C1&!C2	0.0100	ZN(LH)	0.0010	0.9089
C1	!A1&!A2&!B1&!B2&C2	0.0100	ZN(HL)	0.0010	0.3064
C1	!A1&!A2&!B1&B2&C2	0.0100	ZN(HL)	0.0010	0.2870

continues on next page

Table 182 – continued from previous page

C1	!A1&!A2&B1&!B2&C2	0.0100	ZN(HL)	0.0010	0.2870
C1	!A1&A2&!B1&!B2&C2	0.0100	ZN(HL)	0.0010	0.2873
C1	!A1&A2&!B1&B2&C2	0.0100	ZN(HL)	0.0010	0.2678
C1	!A1&A2&B1&!B2&C2	0.0100	ZN(HL)	0.0010	0.2680
C1	A1&!A2&!B1&!B2&C2	0.0100	ZN(HL)	0.0010	0.2874
C1	A1&!A2&!B1&B2&C2	0.0100	ZN(HL)	0.0010	0.2681
C1	A1&!A2&B1&!B2&C2	0.0100	ZN(HL)	0.0010	0.2679
A2	A1&!B1&!B2&!C1&!C2	0.0100	ZN(HL)	0.0010	0.0072
A2	A1&!B1&!B2&!C1&C2	0.0100	ZN(HL)	0.0010	0.0073
A2	A1&!B1&!B2&C1&!C2	0.0100	ZN(HL)	0.0010	0.0073
A2	A1&!B1&B2&!C1&!C2	0.0100	ZN(HL)	0.0010	0.0083
A2	A1&!B1&B2&!C1&C2	0.0100	ZN(HL)	0.0010	0.0083
A2	A1&!B1&B2&C1&!C2	0.0100	ZN(HL)	0.0010	0.0084
A2	A1&B1&!B2&!C1&!C2	0.0100	ZN(HL)	0.0010	0.0084
A2	A1&B1&!B2&!C1&C2	0.0100	ZN(HL)	0.0010	0.0084
A2	A1&B1&!B2&C1&!C2	0.0100	ZN(HL)	0.0010	0.0084
C2	!A1&!A2&!B1&!B2&C1	0.0100	ZN(HL)	0.0010	0.3064
C2	!A1&!A2&!B1&B2&C1	0.0100	ZN(HL)	0.0010	0.2866
C2	!A1&!A2&B1&!B2&C1	0.0100	ZN(HL)	0.0010	0.2868
C2	!A1&A2&!B1&!B2&C1	0.0100	ZN(HL)	0.0010	0.2871
C2	!A1&A2&!B1&B2&C1	0.0100	ZN(HL)	0.0010	0.2676
C2	!A1&A2&B1&!B2&C1	0.0100	ZN(HL)	0.0010	0.2677
C2	A1&!A2&!B1&!B2&C1	0.0100	ZN(HL)	0.0010	0.2872
C2	A1&!A2&!B1&B2&C1	0.0100	ZN(HL)	0.0010	0.2677
C2	A1&!A2&B1&!B2&C1	0.0100	ZN(HL)	0.0010	0.2677
C1	!A1&!A2&!B1&!B2&C2	0.0100	ZN(LH)	0.0010	0.9247
C1	!A1&!A2&!B1&B2&C2	0.0100	ZN(LH)	0.0010	0.8592
C1	!A1&!A2&B1&!B2&C2	0.0100	ZN(LH)	0.0010	0.9959
C1	!A1&A2&!B1&!B2&C2	0.0100	ZN(LH)	0.0010	0.8578
C1	!A1&A2&!B1&B2&C2	0.0100	ZN(LH)	0.0010	0.7926
C1	!A1&A2&B1&!B2&C2	0.0100	ZN(LH)	0.0010	0.9293
C1	A1&!A2&!B1&!B2&C2	0.0100	ZN(LH)	0.0010	0.9915
C1	A1&!A2&!B1&B2&C2	0.0100	ZN(LH)	0.0010	0.9265
C1	A1&!A2&B1&!B2&C2	0.0100	ZN(LH)	0.0010	1.0606
C2	!A1&!A2&!B1&!B2&C1	0.0100	ZN(LH)	0.0010	1.0398
C2	!A1&!A2&!B1&B2&C1	0.0100	ZN(LH)	0.0010	0.9750
C2	!A1&!A2&B1&!B2&C1	0.0100	ZN(LH)	0.0010	1.1069
C2	!A1&A2&!B1&!B2&C1	0.0100	ZN(LH)	0.0010	0.9734
C2	!A1&A2&!B1&B2&C1	0.0100	ZN(LH)	0.0010	0.9082
C2	!A1&A2&B1&!B2&C1	0.0100	ZN(LH)	0.0010	1.0404
C2	A1&!A2&!B1&!B2&C1	0.0100	ZN(LH)	0.0010	1.1028
C2	A1&!A2&!B1&B2&C1	0.0100	ZN(LH)	0.0010	1.0377
C2	A1&!A2&B1&!B2&C1	0.0100	ZN(LH)	0.0010	1.1698
A1	A2&!B1&!B2&!C1&!C2	0.0100	ZN(HL)	0.0010	0.0074
A1	A2&!B1&!B2&!C1&C2	0.0100	ZN(HL)	0.0010	0.0074
A1	A2&!B1&!B2&C1&!C2	0.0100	ZN(HL)	0.0010	0.0073
A1	A2&!B1&B2&!C1&!C2	0.0100	ZN(HL)	0.0010	0.0085
A1	A2&!B1&B2&!C1&C2	0.0100	ZN(HL)	0.0010	0.0084
A1	A2&!B1&B2&C1&!C2	0.0100	ZN(HL)	0.0010	0.0083
A1	A2&B1&!B2&!C1&!C2	0.0100	ZN(HL)	0.0010	0.0083
A1	A2&B1&!B2&!C1&C2	0.0100	ZN(HL)	0.0010	0.0083
A1	A2&B1&!B2&C1&!C2	0.0100	ZN(HL)	0.0010	0.0084

continues on next page

Table 182 – continued from previous page

B2	!A1&!A2&B1&!C1&!C2	0.0100	ZN(HL)	0.0010	0.1698
B2	!A1&!A2&B1&!C1&C2	0.0100	ZN(HL)	0.0010	0.1711
B2	!A1&!A2&B1&C1&!C2	0.0100	ZN(HL)	0.0010	0.1713
B2	!A1&A2&B1&!C1&!C2	0.0100	ZN(HL)	0.0010	0.1502
B2	!A1&A2&B1&!C1&C2	0.0100	ZN(HL)	0.0010	0.1516
B2	!A1&A2&B1&C1&!C2	0.0100	ZN(HL)	0.0010	0.1517
B2	A1&!A2&B1&!C1&!C2	0.0100	ZN(HL)	0.0010	0.1503
B2	A1&!A2&B1&!C1&C2	0.0100	ZN(HL)	0.0010	0.1517
B2	A1&!A2&B1&C1&!C2	0.0100	ZN(HL)	0.0010	0.1516
B2(LH)	!A1&!A2&!B1&!C1&!C2	0.0100	n/a	n/a	-0.1196
B2(LH)	!A1&!A2&!B1&!C1&C2	0.0100	n/a	n/a	-0.1196
B2(LH)	!A1&!A2&!B1&C1&!C2	0.0100	n/a	n/a	-0.1196
B2(LH)	!A1&A2&!B1&!C1&!C2	0.0100	n/a	n/a	-0.1195
B2(LH)	!A1&A2&!B1&!C1&C2	0.0100	n/a	n/a	-0.1194
B2(LH)	!A1&A2&!B1&C1&!C2	0.0100	n/a	n/a	-0.1194
B2(LH)	A1&!A2&!B1&!C1&!C2	0.0100	n/a	n/a	-0.1195
B2(LH)	A1&!A2&!B1&!C1&C2	0.0100	n/a	n/a	-0.1194
B2(LH)	A1&!A2&!B1&C1&!C2	0.0100	n/a	n/a	-0.1194
B2(LH)	!A1&!A2&!B1&C1&C2	0.0100	n/a	n/a	-0.0347
B2(LH)	!A1&!A2&B1&C1&C2	0.0100	n/a	n/a	-0.0365
B2(LH)	!A1&A2&!B1&C1&C2	0.0100	n/a	n/a	-0.0349
B2(LH)	!A1&A2&B1&C1&C2	0.0100	n/a	n/a	-0.0366
B2(LH)	A1&!A2&!B1&C1&C2	0.0100	n/a	n/a	-0.0349
B2(LH)	A1&!A2&B1&C1&C2	0.0100	n/a	n/a	-0.0366
B2(LH)	A1&A2&!B1&!C1&!C2	0.0100	n/a	n/a	-0.1194
B2(LH)	A1&A2&!B1&!C1&C2	0.0100	n/a	n/a	-0.1193
B2(LH)	A1&A2&!B1&C1&!C2	0.0100	n/a	n/a	-0.1193
B2(LH)	A1&A2&!B1&C1&C2	0.0100	n/a	n/a	-0.0656
B2(LH)	A1&A2&B1&!C1&!C2	0.0100	n/a	n/a	-0.0939
B2(LH)	A1&A2&B1&!C1&C2	0.0100	n/a	n/a	-0.0931
B2(LH)	A1&A2&B1&C1&!C2	0.0100	n/a	n/a	-0.0930
B2(LH)	A1&A2&B1&C1&C2	0.0100	n/a	n/a	-0.0695
C2(HL)	!A1&!A2&!B1&!B2&!C1	0.0100	n/a	n/a	0.1330
C2(HL)	!A1&!A2&!B1&B2&!C1	0.0100	n/a	n/a	0.1330
C2(HL)	!A1&!A2&B1&!B2&!C1	0.0100	n/a	n/a	0.1330
C2(HL)	!A1&A2&!B1&!B2&!C1	0.0100	n/a	n/a	0.1330
C2(HL)	!A1&A2&!B1&B2&!C1	0.0100	n/a	n/a	0.1330
C2(HL)	!A1&A2&B1&!B2&!C1	0.0100	n/a	n/a	0.1330
C2(HL)	A1&!A2&!B1&!B2&!C1	0.0100	n/a	n/a	0.1330
C2(HL)	A1&!A2&!B1&B2&!C1	0.0100	n/a	n/a	0.1330
C2(HL)	A1&!A2&B1&!B2&!C1	0.0100	n/a	n/a	0.1330
C2(HL)	!A1&!A2&B1&B2&!C1	0.0100	n/a	n/a	0.1194
C2(HL)	!A1&!A2&B1&B2&C1	0.0100	n/a	n/a	0.1193
C2(HL)	!A1&A2&B1&B2&!C1	0.0100	n/a	n/a	0.1194
C2(HL)	!A1&A2&B1&B2&C1	0.0100	n/a	n/a	0.1193
C2(HL)	A1&!A2&B1&B2&!C1	0.0100	n/a	n/a	0.1194
C2(HL)	A1&!A2&B1&B2&C1	0.0100	n/a	n/a	0.1193
C2(HL)	A1&A2&!B1&!B2&!C1	0.0100	n/a	n/a	0.1193
C2(HL)	A1&A2&!B1&!B2&C1	0.0100	n/a	n/a	0.1175
C2(HL)	A1&A2&!B1&B2&!C1	0.0100	n/a	n/a	0.1194
C2(HL)	A1&A2&!B1&B2&C1	0.0100	n/a	n/a	0.1178
C2(HL)	A1&A2&B1&!B2&!C1	0.0100	n/a	n/a	0.1194

continues on next page

Table 182 – continued from previous page

C2(HL)	A1&A2&B1&!B2&C1	0.0100	n/a	n/a	0.1179
C2(HL)	A1&A2&B1&B2&!C1	0.0100	n/a	n/a	0.1194
C2(HL)	A1&A2&B1&B2&C1	0.0100	n/a	n/a	0.1193
B2(HL)	!A1&!A2&!B1&!C1&!C2	0.0100	n/a	n/a	0.1332
B2(HL)	!A1&!A2&!B1&!C1&C2	0.0100	n/a	n/a	0.1330
B2(HL)	!A1&!A2&!B1&C1&!C2	0.0100	n/a	n/a	0.1330
B2(HL)	!A1&A2&!B1&!C1&!C2	0.0100	n/a	n/a	0.1333
B2(HL)	!A1&A2&!B1&!C1&C2	0.0100	n/a	n/a	0.1331
B2(HL)	!A1&A2&!B1&C1&!C2	0.0100	n/a	n/a	0.1331
B2(HL)	A1&!A2&!B1&!C1&!C2	0.0100	n/a	n/a	0.1333
B2(HL)	A1&!A2&!B1&!C1&C2	0.0100	n/a	n/a	0.1331
B2(HL)	A1&!A2&!B1&C1&!C2	0.0100	n/a	n/a	0.1331
B2(HL)	!A1&!A2&!B1&C1&C2	0.0100	n/a	n/a	0.0388
B2(HL)	!A1&!A2&B1&C1&C2	0.0100	n/a	n/a	0.1211
B2(HL)	!A1&A2&!B1&C1&C2	0.0100	n/a	n/a	0.0389
B2(HL)	!A1&A2&B1&C1&C2	0.0100	n/a	n/a	0.1206
B2(HL)	A1&!A2&!B1&C1&C2	0.0100	n/a	n/a	0.0389
B2(HL)	A1&!A2&B1&C1&C2	0.0100	n/a	n/a	0.1206
B2(HL)	A1&A2&!B1&!C1&!C2	0.0100	n/a	n/a	0.1198
B2(HL)	A1&A2&!B1&!C1&C2	0.0100	n/a	n/a	0.1195
B2(HL)	A1&A2&!B1&C1&!C2	0.0100	n/a	n/a	0.1195
B2(HL)	A1&A2&!B1&C1&C2	0.0100	n/a	n/a	0.0653
B2(HL)	A1&A2&B1&!C1&!C2	0.0100	n/a	n/a	0.1184
B2(HL)	A1&A2&B1&!C1&C2	0.0100	n/a	n/a	0.1184
B2(HL)	A1&A2&B1&C1&!C2	0.0100	n/a	n/a	0.1183
B2(HL)	A1&A2&B1&C1&C2	0.0100	n/a	n/a	0.0697
C2(LH)	!A1&!A2&!B1&!B2&!C1	0.0100	n/a	n/a	-0.1191
C2(LH)	!A1&!A2&!B1&B2&!C1	0.0100	n/a	n/a	-0.1191
C2(LH)	!A1&!A2&B1&!B2&!C1	0.0100	n/a	n/a	-0.1191
C2(LH)	!A1&A2&!B1&!B2&!C1	0.0100	n/a	n/a	-0.1191
C2(LH)	!A1&A2&!B1&B2&!C1	0.0100	n/a	n/a	-0.1191
C2(LH)	!A1&A2&B1&!B2&!C1	0.0100	n/a	n/a	-0.1191
C2(LH)	A1&!A2&!B1&!B2&!C1	0.0100	n/a	n/a	-0.1191
C2(LH)	A1&!A2&!B1&B2&!C1	0.0100	n/a	n/a	-0.1191
C2(LH)	A1&!A2&B1&!B2&!C1	0.0100	n/a	n/a	-0.1191
C2(LH)	!A1&!A2&B1&B2&!C1	0.0100	n/a	n/a	-0.1188
C2(LH)	!A1&!A2&B1&B2&C1	0.0100	n/a	n/a	-0.1011
C2(LH)	!A1&A2&B1&B2&!C1	0.0100	n/a	n/a	-0.1188
C2(LH)	!A1&A2&B1&B2&C1	0.0100	n/a	n/a	-0.1012
C2(LH)	A1&!A2&B1&B2&!C1	0.0100	n/a	n/a	-0.1188
C2(LH)	A1&!A2&B1&B2&C1	0.0100	n/a	n/a	-0.1012
C2(LH)	A1&A2&!B1&!B2&!C1	0.0100	n/a	n/a	-0.1190
C2(LH)	A1&A2&!B1&!B2&C1	0.0100	n/a	n/a	-0.0955
C2(LH)	A1&A2&!B1&B2&!C1	0.0100	n/a	n/a	-0.1189
C2(LH)	A1&A2&!B1&B2&C1	0.0100	n/a	n/a	-0.0980
C2(LH)	A1&A2&B1&!B2&!C1	0.0100	n/a	n/a	-0.1189
C2(LH)	A1&A2&B1&!B2&C1	0.0100	n/a	n/a	-0.0980
C2(LH)	A1&A2&B1&B2&!C1	0.0100	n/a	n/a	-0.1188
C2(LH)	A1&A2&B1&B2&C1	0.0100	n/a	n/a	-0.1043
A2(LH)	!A1&!B1&!B2&!C1&!C2	0.0100	n/a	n/a	-0.1201
A2(LH)	!A1&!B1&!B2&!C1&C2	0.0100	n/a	n/a	-0.1200
A2(LH)	!A1&!B1&!B2&C1&!C2	0.0100	n/a	n/a	-0.1200

continues on next page

Table 182 – continued from previous page

A2(LH)	!A1&!B1&B2&!C1&!C2	0.0100	n/a	n/a	-0.1199
A2(LH)	!A1&!B1&B2&!C1&C2	0.0100	n/a	n/a	-0.1199
A2(LH)	!A1&!B1&B2&C1&!C2	0.0100	n/a	n/a	-0.1199
A2(LH)	!A1&B1&!B2&!C1&!C2	0.0100	n/a	n/a	-0.1199
A2(LH)	!A1&B1&!B2&!C1&C2	0.0100	n/a	n/a	-0.1199
A2(LH)	!A1&B1&!B2&C1&!C2	0.0100	n/a	n/a	-0.1199
A2(LH)	!A1&!B1&!B2&C1&C2	0.0100	n/a	n/a	-0.0296
A2(LH)	!A1&!B1&B2&C1&C2	0.0100	n/a	n/a	-0.0295
A2(LH)	!A1&B1&!B2&C1&C2	0.0100	n/a	n/a	-0.0295
A2(LH)	!A1&B1&B2&!C1&!C2	0.0100	n/a	n/a	-0.0297
A2(LH)	!A1&B1&B2&!C1&C2	0.0100	n/a	n/a	-0.0297
A2(LH)	!A1&B1&B2&C1&!C2	0.0100	n/a	n/a	-0.0297
A2(LH)	!A1&B1&B2&C1&C2	0.0100	n/a	n/a	-0.0296
A2(LH)	A1&!B1&!B2&C1&C2	0.0100	n/a	n/a	-0.0313
A2(LH)	A1&!B1&B2&C1&C2	0.0100	n/a	n/a	-0.0314
A2(LH)	A1&B1&!B2&C1&C2	0.0100	n/a	n/a	-0.0315
A2(LH)	A1&B1&B2&!C1&!C2	0.0100	n/a	n/a	-0.0317
A2(LH)	A1&B1&B2&!C1&C2	0.0100	n/a	n/a	-0.0317
A2(LH)	A1&B1&B2&C1&!C2	0.0100	n/a	n/a	-0.0317
A2(LH)	A1&B1&B2&C1&C2	0.0100	n/a	n/a	-0.0317
A1(LH)	!A2&!B1&!B2&!C1&!C2	0.0100	n/a	n/a	-0.0903
A1(LH)	!A2&!B1&!B2&!C1&C2	0.0100	n/a	n/a	-0.0903
A1(LH)	!A2&!B1&!B2&C1&!C2	0.0100	n/a	n/a	-0.0903
A1(LH)	!A2&!B1&B2&!C1&!C2	0.0100	n/a	n/a	-0.0903
A1(LH)	!A2&!B1&B2&!C1&C2	0.0100	n/a	n/a	-0.0903
A1(LH)	!A2&!B1&B2&C1&!C2	0.0100	n/a	n/a	-0.0903
A1(LH)	!A2&B1&!B2&!C1&!C2	0.0100	n/a	n/a	-0.0903
A1(LH)	!A2&B1&!B2&!C1&C2	0.0100	n/a	n/a	-0.0902
A1(LH)	!A2&B1&!B2&C1&!C2	0.0100	n/a	n/a	-0.0903
A1(LH)	!A2&!B1&!B2&C1&C2	0.0100	n/a	n/a	-0.0296
A1(LH)	!A2&!B1&B2&C1&C2	0.0100	n/a	n/a	-0.0294
A1(LH)	!A2&B1&!B2&C1&C2	0.0100	n/a	n/a	-0.0294
A1(LH)	!A2&B1&B2&!C1&!C2	0.0100	n/a	n/a	-0.0296
A1(LH)	!A2&B1&B2&!C1&C2	0.0100	n/a	n/a	-0.0296
A1(LH)	!A2&B1&B2&C1&!C2	0.0100	n/a	n/a	-0.0296
A1(LH)	!A2&B1&B2&C1&C2	0.0100	n/a	n/a	-0.0296
A1(LH)	A2&!B1&!B2&C1&C2	0.0100	n/a	n/a	-0.0313
A1(LH)	A2&!B1&B2&C1&C2	0.0100	n/a	n/a	-0.0314
A1(LH)	A2&B1&!B2&C1&C2	0.0100	n/a	n/a	-0.0314
A1(LH)	A2&B1&B2&!C1&!C2	0.0100	n/a	n/a	-0.0316
A1(LH)	A2&B1&B2&!C1&C2	0.0100	n/a	n/a	-0.0316
A1(LH)	A2&B1&B2&C1&!C2	0.0100	n/a	n/a	-0.0316
A1(LH)	A2&B1&B2&C1&C2	0.0100	n/a	n/a	-0.0316
C1(LH)	!A1&!A2&!B1&!B2&!C2	0.0100	n/a	n/a	-0.0888
C1(LH)	!A1&!A2&!B1&B2&!C2	0.0100	n/a	n/a	-0.0887
C1(LH)	!A1&!A2&B1&!B2&!C2	0.0100	n/a	n/a	-0.0887
C1(LH)	!A1&A2&!B1&!B2&!C2	0.0100	n/a	n/a	-0.0888
C1(LH)	!A1&A2&!B1&B2&!C2	0.0100	n/a	n/a	-0.0887
C1(LH)	!A1&A2&B1&!B2&!C2	0.0100	n/a	n/a	-0.0887
C1(LH)	A1&!A2&!B1&!B2&!C2	0.0100	n/a	n/a	-0.0888
C1(LH)	A1&!A2&!B1&B2&!C2	0.0100	n/a	n/a	-0.0887
C1(LH)	A1&!A2&B1&!B2&!C2	0.0100	n/a	n/a	-0.0887

continues on next page

Table 182 – continued from previous page

C1(LH)	!A1&!A2&B1&B2&!C2	0.0100	n/a	n/a	-0.1187
C1(LH)	!A1&!A2&B1&B2&C2	0.0100	n/a	n/a	-0.1009
C1(LH)	!A1&A2&B1&B2&!C2	0.0100	n/a	n/a	-0.1187
C1(LH)	!A1&A2&B1&B2&C2	0.0100	n/a	n/a	-0.1010
C1(LH)	A1&!A2&B1&B2&!C2	0.0100	n/a	n/a	-0.1187
C1(LH)	A1&!A2&B1&B2&C2	0.0100	n/a	n/a	-0.1010
C1(LH)	A1&A2&!B1&!B2&!C2	0.0100	n/a	n/a	-0.1187
C1(LH)	A1&A2&!B1&!B2&C2	0.0100	n/a	n/a	-0.0953
C1(LH)	A1&A2&!B1&B2&!C2	0.0100	n/a	n/a	-0.1187
C1(LH)	A1&A2&!B1&B2&C2	0.0100	n/a	n/a	-0.0978
C1(LH)	A1&A2&B1&!B2&!C2	0.0100	n/a	n/a	-0.1187
C1(LH)	A1&A2&B1&!B2&C2	0.0100	n/a	n/a	-0.0978
C1(LH)	A1&A2&B1&B2&!C2	0.0100	n/a	n/a	-0.1187
C1(LH)	A1&A2&B1&B2&C2	0.0100	n/a	n/a	-0.1041
A2(HL)	!A1&!B1&!B2&!C1&!C2	0.0100	n/a	n/a	0.1330
A2(HL)	!A1&!B1&!B2&!C1&C2	0.0100	n/a	n/a	0.1329
A2(HL)	!A1&!B1&!B2&C1&!C2	0.0100	n/a	n/a	0.1329
A2(HL)	!A1&!B1&B2&!C1&!C2	0.0100	n/a	n/a	0.1328
A2(HL)	!A1&!B1&B2&!C1&C2	0.0100	n/a	n/a	0.1328
A2(HL)	!A1&!B1&B2&C1&!C2	0.0100	n/a	n/a	0.1328
A2(HL)	!A1&B1&!B2&!C1&!C2	0.0100	n/a	n/a	0.1328
A2(HL)	!A1&B1&!B2&!C1&C2	0.0100	n/a	n/a	0.1328
A2(HL)	!A1&B1&!B2&C1&!C2	0.0100	n/a	n/a	0.1328
A2(HL)	!A1&!B1&!B2&C1&C2	0.0100	n/a	n/a	0.0312
A2(HL)	!A1&!B1&B2&C1&C2	0.0100	n/a	n/a	0.0313
A2(HL)	!A1&B1&!B2&C1&C2	0.0100	n/a	n/a	0.0313
A2(HL)	!A1&B1&B2&!C1&!C2	0.0100	n/a	n/a	0.0314
A2(HL)	!A1&B1&B2&!C1&C2	0.0100	n/a	n/a	0.0314
A2(HL)	!A1&B1&B2&C1&!C2	0.0100	n/a	n/a	0.0314
A2(HL)	!A1&B1&B2&C1&C2	0.0100	n/a	n/a	0.0314
A2(HL)	A1&!B1&!B2&C1&C2	0.0100	n/a	n/a	0.2902
A2(HL)	A1&!B1&B2&C1&C2	0.0100	n/a	n/a	0.2717
A2(HL)	A1&B1&!B2&C1&C2	0.0100	n/a	n/a	0.2718
A2(HL)	A1&B1&B2&!C1&!C2	0.0100	n/a	n/a	0.1497
A2(HL)	A1&B1&B2&!C1&C2	0.0100	n/a	n/a	0.1497
A2(HL)	A1&B1&B2&C1&!C2	0.0100	n/a	n/a	0.1497
A2(HL)	A1&B1&B2&C1&C2	0.0100	n/a	n/a	0.1497
B1(HL)	!A1&!A2&!B2&!C1&!C2	0.0100	n/a	n/a	0.1341
B1(HL)	!A1&!A2&!B2&!C1&C2	0.0100	n/a	n/a	0.1339
B1(HL)	!A1&!A2&!B2&C1&!C2	0.0100	n/a	n/a	0.1339
B1(HL)	!A1&A2&!B2&!C1&!C2	0.0100	n/a	n/a	0.1342
B1(HL)	!A1&A2&!B2&!C1&C2	0.0100	n/a	n/a	0.1340
B1(HL)	!A1&A2&!B2&C1&!C2	0.0100	n/a	n/a	0.1340
B1(HL)	A1&!A2&!B2&!C1&!C2	0.0100	n/a	n/a	0.1342
B1(HL)	A1&!A2&!B2&!C1&C2	0.0100	n/a	n/a	0.1340
B1(HL)	A1&!A2&!B2&C1&!C2	0.0100	n/a	n/a	0.1340
B1(HL)	!A1&!A2&!B2&C1&C2	0.0100	n/a	n/a	0.0387
B1(HL)	!A1&!A2&B2&C1&C2	0.0100	n/a	n/a	0.1209
B1(HL)	!A1&A2&!B2&C1&C2	0.0100	n/a	n/a	0.0388
B1(HL)	!A1&A2&B2&C1&C2	0.0100	n/a	n/a	0.1205
B1(HL)	A1&!A2&!B2&C1&C2	0.0100	n/a	n/a	0.0388
B1(HL)	A1&!A2&B2&C1&C2	0.0100	n/a	n/a	0.1205

continues on next page

Table 182 – continued from previous page

B1(HL)	A1&A2&!B2&!C1&!C2	0.0100	n/a	n/a	0.1197
B1(HL)	A1&A2&!B2&!C1&C2	0.0100	n/a	n/a	0.1195
B1(HL)	A1&A2&!B2&C1&!C2	0.0100	n/a	n/a	0.1196
B1(HL)	A1&A2&!B2&C1&C2	0.0100	n/a	n/a	0.0653
B1(HL)	A1&A2&B2&!C1&!C2	0.0100	n/a	n/a	0.1184
B1(HL)	A1&A2&B2&!C1&C2	0.0100	n/a	n/a	0.1184
B1(HL)	A1&A2&B2&C1&!C2	0.0100	n/a	n/a	0.1184
B1(HL)	A1&A2&B2&C1&C2	0.0100	n/a	n/a	0.0697
C1(HL)	!A1&!A2&!B1&!B2&!C2	0.0100	n/a	n/a	0.1341
C1(HL)	!A1&!A2&!B1&B2&!C2	0.0100	n/a	n/a	0.1341
C1(HL)	!A1&!A2&B1&!B2&!C2	0.0100	n/a	n/a	0.1341
C1(HL)	!A1&A2&!B1&!B2&!C2	0.0100	n/a	n/a	0.1340
C1(HL)	!A1&A2&!B1&B2&!C2	0.0100	n/a	n/a	0.1341
C1(HL)	!A1&A2&B1&!B2&!C2	0.0100	n/a	n/a	0.1342
C1(HL)	A1&!A2&!B1&!B2&!C2	0.0100	n/a	n/a	0.1341
C1(HL)	A1&!A2&!B1&B2&!C2	0.0100	n/a	n/a	0.1341
C1(HL)	A1&!A2&B1&!B2&!C2	0.0100	n/a	n/a	0.1342
C1(HL)	!A1&!A2&B1&B2&!C2	0.0100	n/a	n/a	0.1195
C1(HL)	!A1&!A2&B1&B2&C2	0.0100	n/a	n/a	0.1191
C1(HL)	!A1&A2&B1&B2&!C2	0.0100	n/a	n/a	0.1195
C1(HL)	!A1&A2&B1&B2&C2	0.0100	n/a	n/a	0.1191
C1(HL)	A1&!A2&B1&B2&!C2	0.0100	n/a	n/a	0.1194
C1(HL)	A1&!A2&B1&B2&C2	0.0100	n/a	n/a	0.1191
C1(HL)	A1&A2&!B1&!B2&!C2	0.0100	n/a	n/a	0.1195
C1(HL)	A1&A2&!B1&!B2&C2	0.0100	n/a	n/a	0.1173
C1(HL)	A1&A2&!B1&B2&!C2	0.0100	n/a	n/a	0.1195
C1(HL)	A1&A2&!B1&B2&C2	0.0100	n/a	n/a	0.1176
C1(HL)	A1&A2&B1&!B2&!C2	0.0100	n/a	n/a	0.1195
C1(HL)	A1&A2&B1&!B2&C2	0.0100	n/a	n/a	0.1176
C1(HL)	A1&A2&B1&B2&!C2	0.0100	n/a	n/a	0.1195
C1(HL)	A1&A2&B1&B2&C2	0.0100	n/a	n/a	0.1191
A1(HL)	!A2&!B1&!B2&!C1&!C2	0.0100	n/a	n/a	0.1344
A1(HL)	!A2&!B1&!B2&!C1&C2	0.0100	n/a	n/a	0.1344
A1(HL)	!A2&!B1&!B2&C1&!C2	0.0100	n/a	n/a	0.1344
A1(HL)	!A2&!B1&B2&!C1&!C2	0.0100	n/a	n/a	0.1341
A1(HL)	!A2&!B1&B2&!C1&C2	0.0100	n/a	n/a	0.1342
A1(HL)	!A2&!B1&B2&C1&!C2	0.0100	n/a	n/a	0.1342
A1(HL)	!A2&B1&!B2&!C1&!C2	0.0100	n/a	n/a	0.1343
A1(HL)	!A2&B1&!B2&!C1&C2	0.0100	n/a	n/a	0.1342
A1(HL)	!A2&B1&!B2&C1&!C2	0.0100	n/a	n/a	0.1341
A1(HL)	!A2&!B1&!B2&C1&C2	0.0100	n/a	n/a	0.0310
A1(HL)	!A2&!B1&B2&C1&C2	0.0100	n/a	n/a	0.0311
A1(HL)	!A2&B1&!B2&C1&C2	0.0100	n/a	n/a	0.0311
A1(HL)	!A2&B1&B2&!C1&!C2	0.0100	n/a	n/a	0.0312
A1(HL)	!A2&B1&B2&!C1&C2	0.0100	n/a	n/a	0.0312
A1(HL)	!A2&B1&B2&C1&!C2	0.0100	n/a	n/a	0.0312
A1(HL)	!A2&B1&B2&C1&C2	0.0100	n/a	n/a	0.0312
A1(HL)	A2&!B1&!B2&C1&C2	0.0100	n/a	n/a	0.2901
A1(HL)	A2&!B1&B2&C1&C2	0.0100	n/a	n/a	0.2716
A1(HL)	A2&B1&!B2&C1&C2	0.0100	n/a	n/a	0.2717
A1(HL)	A2&B1&B2&!C1&!C2	0.0100	n/a	n/a	0.1497
A1(HL)	A2&B1&B2&!C1&C2	0.0100	n/a	n/a	0.1497

continues on next page

Table 182 – continued from previous page

A1(HL)	A2&B1&B2&C1&!C2	0.0100	n/a	n/a	0.1497
A1(HL)	A2&B1&B2&C1&C2	0.0100	n/a	n/a	0.1497
B1(LH)	!A1&!A2&!B2&!C1&!C2	0.0100	n/a	n/a	-0.0870
B1(LH)	!A1&!A2&!B2&!C1&C2	0.0100	n/a	n/a	-0.0870
B1(LH)	!A1&!A2&!B2&C1&!C2	0.0100	n/a	n/a	-0.0870
B1(LH)	!A1&A2&!B2&!C1&!C2	0.0100	n/a	n/a	-0.0869
B1(LH)	!A1&A2&!B2&!C1&C2	0.0100	n/a	n/a	-0.0870
B1(LH)	!A1&A2&!B2&C1&!C2	0.0100	n/a	n/a	-0.0870
B1(LH)	A1&!A2&!B2&!C1&!C2	0.0100	n/a	n/a	-0.0870
B1(LH)	A1&!A2&!B2&!C1&C2	0.0100	n/a	n/a	-0.0870
B1(LH)	A1&!A2&!B2&C1&!C2	0.0100	n/a	n/a	-0.0870
B1(LH)	!A1&!A2&!B2&C1&C2	0.0100	n/a	n/a	-0.0347
B1(LH)	!A1&!A2&B2&C1&C2	0.0100	n/a	n/a	-0.0364
B1(LH)	!A1&A2&!B2&C1&C2	0.0100	n/a	n/a	-0.0349
B1(LH)	!A1&A2&B2&C1&C2	0.0100	n/a	n/a	-0.0366
B1(LH)	A1&!A2&!B2&C1&C2	0.0100	n/a	n/a	-0.0348
B1(LH)	A1&!A2&B2&C1&C2	0.0100	n/a	n/a	-0.0366
B1(LH)	A1&A2&!B2&!C1&!C2	0.0100	n/a	n/a	-0.1193
B1(LH)	A1&A2&!B2&!C1&C2	0.0100	n/a	n/a	-0.1192
B1(LH)	A1&A2&!B2&C1&!C2	0.0100	n/a	n/a	-0.1191
B1(LH)	A1&A2&!B2&C1&C2	0.0100	n/a	n/a	-0.0654
B1(LH)	A1&A2&B2&!C1&!C2	0.0100	n/a	n/a	-0.0938
B1(LH)	A1&A2&B2&!C1&C2	0.0100	n/a	n/a	-0.0929
B1(LH)	A1&A2&B2&C1&!C2	0.0100	n/a	n/a	-0.0929
B1(LH)	A1&A2&B2&C1&C2	0.0100	n/a	n/a	-0.0693

LEAKAGE POWER

When Condition	Power (nW)
!A1&!A2&!B1&!B2&!C1&!C2	0.2015
!A1&!A2&!B1&!B2&!C1&C2	0.2022
!A1&!A2&!B1&!B2&C1&!C2	0.2817
!A1&!A2&!B1&B2&!C1&!C2	0.2022
!A1&!A2&!B1&B2&!C1&C2	0.2028
!A1&!A2&!B1&B2&C1&!C2	0.2824
!A1&!A2&B1&!B2&!C1&!C2	0.2817
!A1&!A2&B1&!B2&!C1&C2	0.2824
!A1&!A2&B1&!B2&C1&!C2	0.3619
!A1&A2&!B1&!B2&!C1&!C2	0.2022
!A1&A2&!B1&!B2&!C1&C2	0.2028
!A1&A2&!B1&!B2&C1&!C2	0.2824
!A1&A2&!B1&B2&!C1&!C2	0.2028
!A1&A2&!B1&B2&!C1&C2	0.2035
!A1&A2&!B1&B2&C1&!C2	0.2830
!A1&A2&B1&!B2&!C1&!C2	0.2824
!A1&A2&B1&!B2&!C1&C2	0.2830
!A1&A2&B1&!B2&C1&!C2	0.3626

continues on next page

Table 183 – continued from previous page

A1&!A2&!B1&!B2&!C1&!C2	0.2817
A1&!A2&!B1&!B2&!C1&C2	0.2824
A1&!A2&!B1&!B2&C1&!C2	0.3619
A1&!A2&!B1&B2&!C1&!C2	0.2824
A1&!A2&!B1&B2&!C1&C2	0.2830
A1&!A2&!B1&B2&C1&!C2	0.3626
A1&!A2&B1&!B2&!C1&!C2	0.3619
A1&!A2&B1&!B2&!C1&C2	0.3626
A1&!A2&B1&!B2&C1&!C2	0.4421
!A1&!A2&!B1&!B2&C1&C2	0.4405
!A1&!A2&!B1&B2&C1&C2	0.4451
!A1&!A2&B1&!B2&C1&C2	0.4451
!A1&!A2&B1&B2&!C1&!C2	0.2995
!A1&!A2&B1&B2&!C1&C2	0.2995
!A1&!A2&B1&B2&C1&!C2	0.2995
!A1&!A2&B1&B2&C1&C2	0.2995
!A1&A2&!B1&!B2&C1&C2	0.4458
!A1&A2&!B1&B2&C1&C2	0.4505
!A1&A2&B1&!B2&C1&C2	0.4505
!A1&A2&B1&B2&!C1&!C2	0.3050
!A1&A2&B1&B2&!C1&C2	0.3050
!A1&A2&B1&B2&C1&!C2	0.3050
!A1&A2&B1&B2&C1&C2	0.3051
A1&!A2&!B1&!B2&C1&C2	0.4458
A1&!A2&!B1&B2&C1&C2	0.4505
A1&!A2&B1&!B2&C1&C2	0.4505
A1&!A2&B1&B2&!C1&!C2	0.3050
A1&!A2&B1&B2&!C1&C2	0.3050
A1&!A2&B1&B2&C1&!C2	0.3050
A1&!A2&B1&B2&C1&C2	0.3051
A1&A2&!B1&!B2&!C1&!C2	0.1574
A1&A2&!B1&!B2&!C1&C2	0.1574
A1&A2&!B1&!B2&C1&!C2	0.1574
A1&A2&!B1&!B2&C1&C2	0.1567
A1&A2&!B1&B2&!C1&!C2	0.1574
A1&A2&!B1&B2&!C1&C2	0.1574
A1&A2&!B1&B2&C1&!C2	0.1574
A1&A2&!B1&B2&C1&C2	0.1568
A1&A2&B1&!B2&!C1&!C2	0.1574
A1&A2&B1&!B2&!C1&C2	0.1574
A1&A2&B1&!B2&C1&!C2	0.1574
A1&A2&B1&!B2&C1&C2	0.1568
A1&A2&B1&B2&!C1&!C2	0.1569
A1&A2&B1&B2&!C1&C2	0.1569
A1&A2&B1&B2&C1&!C2	0.1569
A1&A2&B1&B2&C1&C2	0.1569

gf180mcu_fd_sc_mcu9t5v0__aoi222_4

gf180mcu_fd_sc_mcu9t5v0__aoi222_4 symbol

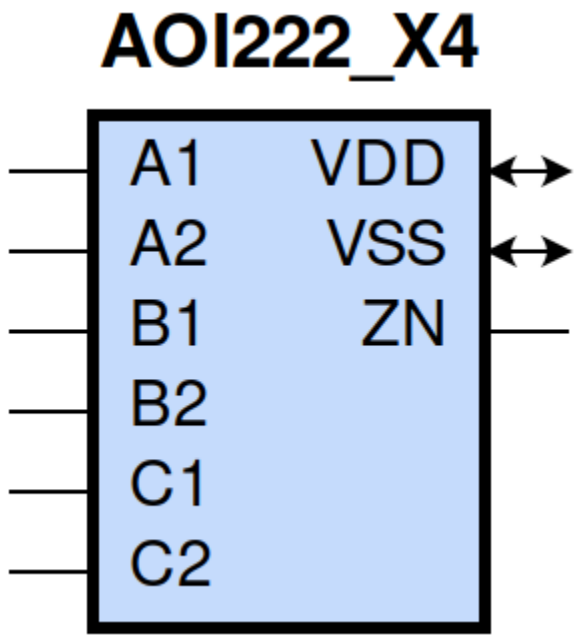

gf180mcu_fd_sc_mcu9t5v0__aoi222_4 schematic

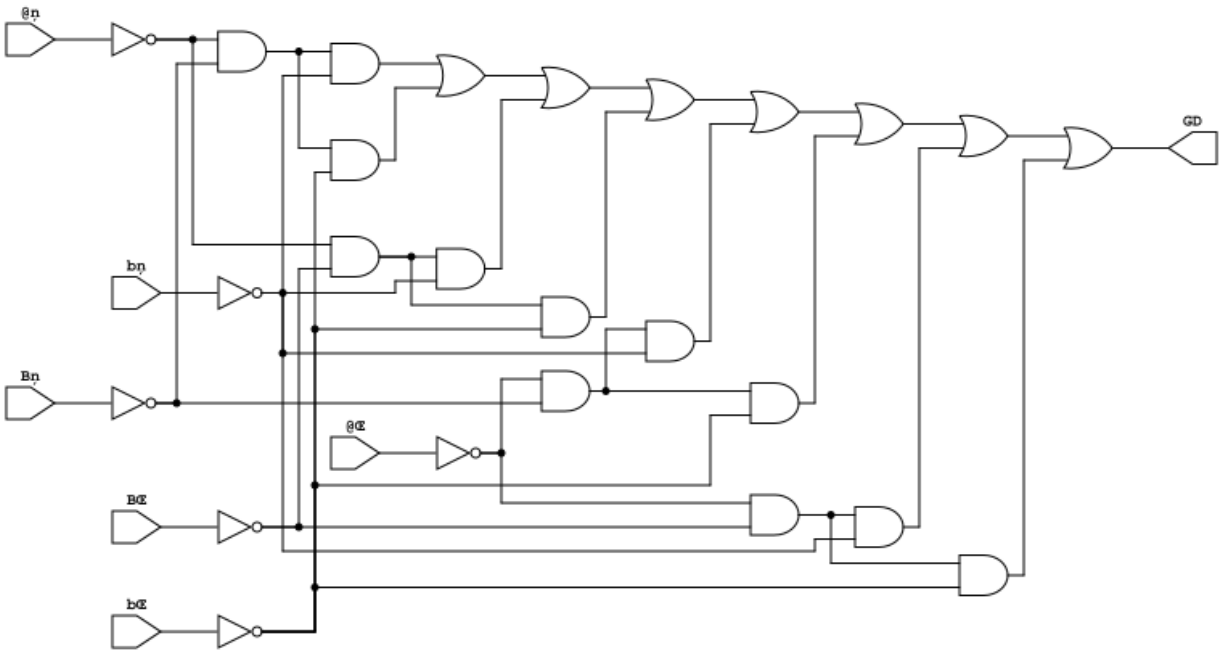

gf180mcu_fd_sc_mcu9t5v0__aoi222_4 layout

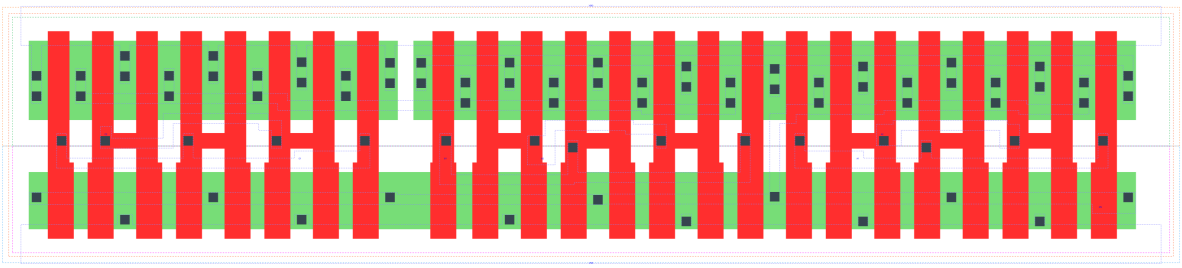

AOI222_X4 is a three 2-input AND into 3-input NOR with 4X drive strength

Attributes

Attribute	Value
area	132.652800 μm^2

OUTPUT FUNCTIONS

Output Pin	Function
ZN	(((!A1)&(!B1)&(!C1))|((!A1)&(!B1)&(!C2))|((!A1)&(!B2)&(!C1))|((!A1)&(!B2)&(!C2))|((!A2)&(!B1)&(!C1))|((!A2)&(!B

TRUTH TABLE FOR ZN

A1	A2	B1	B2	C1	C2	ZN
0	?	0	?	0	?	1
0	?	0	?	?	0	1
0	?	?	0	0	?	1
0	?	?	0	?	0	1
?	0	0	?	0	?	1
?	0	0	?	?	0	1
?	0	?	0	0	?	1
?	0	?	0	?	0	1
1	1	?	?	?	?	0
?	?	1	1	?	?	0
?	?	?	?	1	1	0

FUNCTIONAL SCHEMATIC

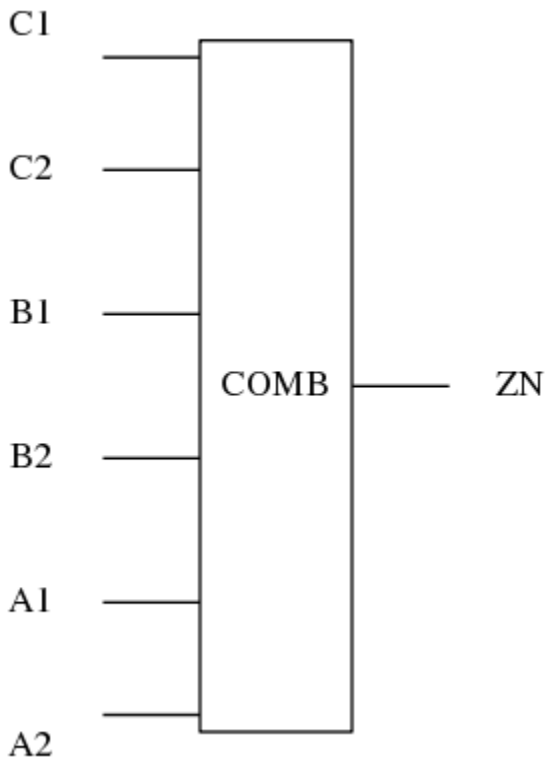

PIN CAPACITANCE (pf)

Pin	Type	Capacitance (pf)
C1	input	0.0274
C2	input	0.0264
B1	input	0.0278
B2	input	0.0265
A1	input	0.0284
A2	input	0.0276

DELAY AND OUTPUT TRANSITION TIME corresponding to min slew and load

Input Pin	Output	When Condition	Tin (ns)	Out Load (pf)	Delay (ns)	Tout (ns)
C1(LH)	ZN(HL)	!A1&!A2&!B1&!B2&C2	0.0100	0.0010	0.1387	0.0994

continues on next page

Table 184 – continued from previous page

C1(LH)	ZN(HL)	!A1&!A2&!B1&B2&C2	0.0100	0.0010	0.1291	0.0924
C1(LH)	ZN(HL)	!A1&!A2&B1&!B2&C2	0.0100	0.0010	0.1417	0.1144
C1(LH)	ZN(HL)	!A1&A2&!B1&!B2&C2	0.0100	0.0010	0.1003	0.0835
C1(LH)	ZN(HL)	!A1&A2&!B1&B2&C2	0.0100	0.0010	0.0960	0.0783
C1(LH)	ZN(HL)	!A1&A2&B1&!B2&C2	0.0100	0.0010	0.1086	0.1018
C1(LH)	ZN(HL)	A1&!A2&!B1&!B2&C2	0.0100	0.0010	0.1140	0.1080
C1(LH)	ZN(HL)	A1&!A2&!B1&B2&C2	0.0100	0.0010	0.1086	0.1019
C1(LH)	ZN(HL)	A1&!A2&B1&!B2&C2	0.0100	0.0010	0.1226	0.1242
C1(HL)	ZN(LH)	!A1&!A2&!B1&!B2&C2	0.0100	0.0010	0.2201	0.1251
C1(HL)	ZN(LH)	!A1&!A2&!B1&B2&C2	0.0100	0.0010	0.2517	0.1530
C1(HL)	ZN(LH)	!A1&!A2&B1&!B2&C2	0.0100	0.0010	0.3039	0.1895
C1(HL)	ZN(LH)	!A1&A2&!B1&!B2&C2	0.0100	0.0010	0.2528	0.1210
C1(HL)	ZN(LH)	!A1&A2&!B1&B2&C2	0.0100	0.0010	0.2799	0.1428
C1(HL)	ZN(LH)	!A1&A2&B1&!B2&C2	0.0100	0.0010	0.3419	0.1866
C1(HL)	ZN(LH)	A1&!A2&!B1&!B2&C2	0.0100	0.0010	0.3059	0.1564
C1(HL)	ZN(LH)	A1&!A2&!B1&B2&C2	0.0100	0.0010	0.3418	0.1864
C1(HL)	ZN(LH)	A1&!A2&B1&!B2&C2	0.0100	0.0010	0.4010	0.2308
C2(LH)	ZN(HL)	!A1&!A2&!B1&!B2&C1	0.0100	0.0010	0.1501	0.0996
C2(LH)	ZN(HL)	!A1&!A2&!B1&B2&C1	0.0100	0.0010	0.1406	0.0921
C2(LH)	ZN(HL)	!A1&!A2&B1&!B2&C1	0.0100	0.0010	0.1531	0.1140
C2(LH)	ZN(HL)	!A1&A2&!B1&!B2&C1	0.0100	0.0010	0.1120	0.0829
C2(LH)	ZN(HL)	!A1&A2&!B1&B2&C1	0.0100	0.0010	0.1079	0.0777
C2(LH)	ZN(HL)	!A1&A2&B1&!B2&C1	0.0100	0.0010	0.1204	0.1013
C2(LH)	ZN(HL)	A1&!A2&!B1&!B2&C1	0.0100	0.0010	0.1256	0.1074
C2(LH)	ZN(HL)	A1&!A2&!B1&B2&C1	0.0100	0.0010	0.1204	0.1012
C2(LH)	ZN(HL)	A1&!A2&B1&!B2&C1	0.0100	0.0010	0.1342	0.1235
C2(HL)	ZN(LH)	!A1&!A2&!B1&!B2&C1	0.0100	0.0010	0.2548	0.1543
C2(HL)	ZN(LH)	!A1&!A2&!B1&B2&C1	0.0100	0.0010	0.2942	0.1897
C2(HL)	ZN(LH)	!A1&!A2&B1&!B2&C1	0.0100	0.0010	0.3432	0.2268
C2(HL)	ZN(LH)	!A1&A2&!B1&!B2&C1	0.0100	0.0010	0.2963	0.1570
C2(HL)	ZN(LH)	!A1&A2&!B1&B2&C1	0.0100	0.0010	0.3307	0.1870
C2(HL)	ZN(LH)	!A1&A2&B1&!B2&C1	0.0100	0.0010	0.3887	0.2310
C2(HL)	ZN(LH)	A1&!A2&!B1&!B2&C1	0.0100	0.0010	0.3455	0.1932
C2(HL)	ZN(LH)	A1&!A2&!B1&B2&C1	0.0100	0.0010	0.3888	0.2309
C2(HL)	ZN(LH)	A1&!A2&B1&!B2&C1	0.0100	0.0010	0.4463	0.2755
B1(LH)	ZN(HL)	!A1&!A2&B2&!C1&!C2	0.0100	0.0010	0.1127	0.0717
B1(LH)	ZN(HL)	!A1&!A2&B2&!C1&C2	0.0100	0.0010	0.1129	0.0716
B1(LH)	ZN(HL)	!A1&!A2&B2&C1&!C2	0.0100	0.0010	0.1224	0.0901
B1(LH)	ZN(HL)	!A1&A2&B2&!C1&!C2	0.0100	0.0010	0.0918	0.0629
B1(LH)	ZN(HL)	!A1&A2&B2&!C1&C2	0.0100	0.0010	0.0921	0.0630
B1(LH)	ZN(HL)	!A1&A2&B2&C1&!C2	0.0100	0.0010	0.1013	0.0824
B1(LH)	ZN(HL)	A1&!A2&B2&!C1&!C2	0.0100	0.0010	0.1011	0.0823
B1(LH)	ZN(HL)	A1&!A2&B2&!C1&C2	0.0100	0.0010	0.1013	0.0825
B1(LH)	ZN(HL)	A1&!A2&B2&C1&!C2	0.0100	0.0010	0.1126	0.1014
B1(HL)	ZN(LH)	!A1&!A2&B2&!C1&!C2	0.0100	0.0010	0.1704	0.1141
B1(HL)	ZN(LH)	!A1&!A2&B2&!C1&C2	0.0100	0.0010	0.2043	0.1519
B1(HL)	ZN(LH)	!A1&!A2&B2&C1&!C2	0.0100	0.0010	0.2555	0.1890
B1(HL)	ZN(LH)	!A1&A2&B2&!C1&!C2	0.0100	0.0010	0.1977	0.1126
B1(HL)	ZN(LH)	!A1&A2&B2&!C1&C2	0.0100	0.0010	0.2324	0.1419
B1(HL)	ZN(LH)	!A1&A2&B2&C1&!C2	0.0100	0.0010	0.2938	0.1862
B1(HL)	ZN(LH)	A1&!A2&B2&!C1&!C2	0.0100	0.0010	0.2484	0.1493
B1(HL)	ZN(LH)	A1&!A2&B2&!C1&C2	0.0100	0.0010	0.2938	0.1861

continues on next page

Table 184 – continued from previous page

B1(HL)	ZN(LH)	A1&!A2&B2&C1&!C2	0.0100	0.0010	0.3530	0.2305
B2(HL)	ZN(LH)	!A1&!A2&B1&!C1&!C2	0.0100	0.0010	0.2037	0.1438
B2(HL)	ZN(LH)	!A1&!A2&B1&!C1&C2	0.0100	0.0010	0.2461	0.1892
B2(HL)	ZN(LH)	!A1&!A2&B1&C1&!C2	0.0100	0.0010	0.2951	0.2265
B2(HL)	ZN(LH)	!A1&A2&B1&!C1&!C2	0.0100	0.0010	0.2394	0.1495
B2(HL)	ZN(LH)	!A1&A2&B1&!C1&C2	0.0100	0.0010	0.2826	0.1867
B2(HL)	ZN(LH)	!A1&A2&B1&C1&!C2	0.0100	0.0010	0.3405	0.2308
B2(HL)	ZN(LH)	A1&!A2&B1&!C1&!C2	0.0100	0.0010	0.2878	0.1863
B2(HL)	ZN(LH)	A1&!A2&B1&!C1&C2	0.0100	0.0010	0.3405	0.2308
B2(HL)	ZN(LH)	A1&!A2&B1&C1&!C2	0.0100	0.0010	0.3984	0.2755
B2(LH)	ZN(HL)	!A1&!A2&B1&!C1&!C2	0.0100	0.0010	0.1242	0.0713
B2(LH)	ZN(HL)	!A1&!A2&B1&!C1&C2	0.0100	0.0010	0.1245	0.0714
B2(LH)	ZN(HL)	!A1&!A2&B1&C1&!C2	0.0100	0.0010	0.1338	0.0903
B2(LH)	ZN(HL)	!A1&A2&B1&!C1&!C2	0.0100	0.0010	0.1033	0.0625
B2(LH)	ZN(HL)	!A1&A2&B1&!C1&C2	0.0100	0.0010	0.1036	0.0624
B2(LH)	ZN(HL)	!A1&A2&B1&C1&!C2	0.0100	0.0010	0.1128	0.0820
B2(LH)	ZN(HL)	A1&!A2&B1&!C1&!C2	0.0100	0.0010	0.1126	0.0821
B2(LH)	ZN(HL)	A1&!A2&B1&!C1&C2	0.0100	0.0010	0.1128	0.0821
B2(LH)	ZN(HL)	A1&!A2&B1&C1&!C2	0.0100	0.0010	0.1241	0.1011
A1(HL)	ZN(LH)	A2&!B1&!B2&!C1&!C2	0.0100	0.0010	0.0997	0.0808
A1(HL)	ZN(LH)	A2&!B1&!B2&!C1&C2	0.0100	0.0010	0.1064	0.0983
A1(HL)	ZN(LH)	A2&!B1&!B2&C1&!C2	0.0100	0.0010	0.1518	0.1419
A1(HL)	ZN(LH)	A2&!B1&B2&!C1&!C2	0.0100	0.0010	0.1185	0.1055
A1(HL)	ZN(LH)	A2&!B1&B2&!C1&C2	0.0100	0.0010	0.1262	0.1263
A1(HL)	ZN(LH)	A2&!B1&B2&C1&!C2	0.0100	0.0010	0.1828	0.1776
A1(HL)	ZN(LH)	A2&B1&!B2&!C1&!C2	0.0100	0.0010	0.1673	0.1458
A1(HL)	ZN(LH)	A2&B1&!B2&!C1&C2	0.0100	0.0010	0.1830	0.1777
A1(HL)	ZN(LH)	A2&B1&!B2&C1&!C2	0.0100	0.0010	0.2412	0.2260
A1(LH)	ZN(HL)	A2&!B1&!B2&!C1&!C2	0.0100	0.0010	0.0622	0.0370
A1(LH)	ZN(HL)	A2&!B1&!B2&!C1&C2	0.0100	0.0010	0.0622	0.0370
A1(LH)	ZN(HL)	A2&!B1&!B2&C1&!C2	0.0100	0.0010	0.0671	0.0530
A1(LH)	ZN(HL)	A2&!B1&B2&!C1&!C2	0.0100	0.0010	0.0623	0.0370
A1(LH)	ZN(HL)	A2&!B1&B2&!C1&C2	0.0100	0.0010	0.0623	0.0370
A1(LH)	ZN(HL)	A2&!B1&B2&C1&!C2	0.0100	0.0010	0.0672	0.0530
A1(LH)	ZN(HL)	A2&B1&!B2&!C1&!C2	0.0100	0.0010	0.0672	0.0532
A1(LH)	ZN(HL)	A2&B1&!B2&!C1&C2	0.0100	0.0010	0.0672	0.0532
A1(LH)	ZN(HL)	A2&B1&!B2&C1&!C2	0.0100	0.0010	0.0740	0.0698
A2(HL)	ZN(LH)	A1&!B1&!B2&!C1&!C2	0.0100	0.0010	0.1306	0.1123
A2(HL)	ZN(LH)	A1&!B1&!B2&!C1&C2	0.0100	0.0010	0.1429	0.1399
A2(HL)	ZN(LH)	A1&!B1&!B2&C1&!C2	0.0100	0.0010	0.1890	0.1824
A2(HL)	ZN(LH)	A1&!B1&B2&!C1&!C2	0.0100	0.0010	0.1577	0.1449
A2(HL)	ZN(LH)	A1&!B1&B2&!C1&C2	0.0100	0.0010	0.1717	0.1761
A2(HL)	ZN(LH)	A1&!B1&B2&C1&!C2	0.0100	0.0010	0.2285	0.2250
A2(HL)	ZN(LH)	A1&B1&!B2&!C1&!C2	0.0100	0.0010	0.2057	0.1842
A2(HL)	ZN(LH)	A1&B1&!B2&!C1&C2	0.0100	0.0010	0.2287	0.2251
A2(HL)	ZN(LH)	A1&B1&!B2&C1&!C2	0.0100	0.0010	0.2861	0.2723
A2(LH)	ZN(HL)	A1&!B1&!B2&!C1&!C2	0.0100	0.0010	0.0735	0.0369
A2(LH)	ZN(HL)	A1&!B1&!B2&!C1&C2	0.0100	0.0010	0.0735	0.0370
A2(LH)	ZN(HL)	A1&!B1&!B2&C1&!C2	0.0100	0.0010	0.0785	0.0530
A2(LH)	ZN(HL)	A1&!B1&B2&!C1&!C2	0.0100	0.0010	0.0738	0.0370
A2(LH)	ZN(HL)	A1&!B1&B2&!C1&C2	0.0100	0.0010	0.0738	0.0370
A2(LH)	ZN(HL)	A1&!B1&B2&C1&!C2	0.0100	0.0010	0.0787	0.0531

continues on next page

Table 184 – continued from previous page

A2(LH)	ZN(HL)	A1&B1&!B2&!C1&!C2	0.0100	0.0010	0.0787	0.0531
A2(LH)	ZN(HL)	A1&B1&!B2&!C1&C2	0.0100	0.0010	0.0787	0.0531
A2(LH)	ZN(HL)	A1&B1&!B2&C1&!C2	0.0100	0.0010	0.0856	0.0698

DYNAMIC ENERGY

Input Pin	When Condition	Tin (ns)	Output	Out Load (pf)	Energy (uW/MHz)
A1	A2&!B1&!B2&!C1&!C2	0.0100	ZN(LH)	0.0010	0.9037
A1	A2&!B1&!B2&!C1&C2	0.0100	ZN(LH)	0.0010	0.9044
A1	A2&!B1&!B2&C1&!C2	0.0100	ZN(LH)	0.0010	1.1711
A1	A2&!B1&B2&!C1&!C2	0.0100	ZN(LH)	0.0010	0.9034
A1	A2&!B1&B2&!C1&C2	0.0100	ZN(LH)	0.0010	0.9037
A1	A2&!B1&B2&C1&!C2	0.0100	ZN(LH)	0.0010	1.1703
A1	A2&B1&!B2&!C1&!C2	0.0100	ZN(LH)	0.0010	1.1709
A1	A2&B1&!B2&!C1&C2	0.0100	ZN(LH)	0.0010	1.1711
A1	A2&B1&!B2&C1&!C2	0.0100	ZN(LH)	0.0010	1.4350
B2	!A1&!A2&B1&!C1&!C2	0.0100	ZN(LH)	0.0010	1.5935
B2	!A1&!A2&B1&!C1&C2	0.0100	ZN(LH)	0.0010	1.5931
B2	!A1&!A2&B1&C1&!C2	0.0100	ZN(LH)	0.0010	1.8531
B2	!A1&A2&B1&!C1&!C2	0.0100	ZN(LH)	0.0010	1.4603
B2	!A1&A2&B1&!C1&C2	0.0100	ZN(LH)	0.0010	1.4605
B2	!A1&A2&B1&C1&!C2	0.0100	ZN(LH)	0.0010	1.7202
B2	A1&!A2&B1&!C1&!C2	0.0100	ZN(LH)	0.0010	1.7201
B2	A1&!A2&B1&!C1&C2	0.0100	ZN(LH)	0.0010	1.7201
B2	A1&!A2&B1&C1&!C2	0.0100	ZN(LH)	0.0010	1.9795
B1	!A1&!A2&B2&!C1&!C2	0.0100	ZN(HL)	0.0010	0.3209
B1	!A1&!A2&B2&!C1&C2	0.0100	ZN(HL)	0.0010	0.3243
B1	!A1&!A2&B2&C1&!C2	0.0100	ZN(HL)	0.0010	0.3245
B1	!A1&A2&B2&!C1&!C2	0.0100	ZN(HL)	0.0010	0.2816
B1	!A1&A2&B2&!C1&C2	0.0100	ZN(HL)	0.0010	0.2845
B1	!A1&A2&B2&C1&!C2	0.0100	ZN(HL)	0.0010	0.2852
B1	A1&!A2&B2&!C1&!C2	0.0100	ZN(HL)	0.0010	0.2823
B1	A1&!A2&B2&!C1&C2	0.0100	ZN(HL)	0.0010	0.2854
B1	A1&!A2&B2&C1&!C2	0.0100	ZN(HL)	0.0010	0.2852
A2	A1&!B1&!B2&!C1&!C2	0.0100	ZN(LH)	0.0010	1.1331
A2	A1&!B1&!B2&!C1&C2	0.0100	ZN(LH)	0.0010	1.1337
A2	A1&!B1&!B2&C1&!C2	0.0100	ZN(LH)	0.0010	1.3932
A2	A1&!B1&B2&!C1&!C2	0.0100	ZN(LH)	0.0010	1.1327
A2	A1&!B1&B2&!C1&C2	0.0100	ZN(LH)	0.0010	1.1332
A2	A1&!B1&B2&C1&!C2	0.0100	ZN(LH)	0.0010	1.3932
A2	A1&B1&!B2&!C1&!C2	0.0100	ZN(LH)	0.0010	1.3936
A2	A1&B1&!B2&!C1&C2	0.0100	ZN(LH)	0.0010	1.3940
A2	A1&B1&!B2&C1&!C2	0.0100	ZN(LH)	0.0010	1.6537
B1	!A1&!A2&B2&!C1&!C2	0.0100	ZN(LH)	0.0010	1.3606
B1	!A1&!A2&B2&!C1&C2	0.0100	ZN(LH)	0.0010	1.3603
B1	!A1&!A2&B2&C1&!C2	0.0100	ZN(LH)	0.0010	1.6292
B1	!A1&A2&B2&!C1&!C2	0.0100	ZN(LH)	0.0010	1.2271

continues on next page

Table 185 – continued from previous page

B1	!A1&A2&B2&!C1&C2	0.0100	ZN(LH)	0.0010	1.2267
B1	!A1&A2&B2&C1&!C2	0.0100	ZN(LH)	0.0010	1.4957
B1	A1&!A2&B2&!C1&!C2	0.0100	ZN(LH)	0.0010	1.4960
B1	A1&!A2&B2&!C1&C2	0.0100	ZN(LH)	0.0010	1.4958
B1	A1&!A2&B2&C1&!C2	0.0100	ZN(LH)	0.0010	1.7593
C1	!A1&!A2&!B1&!B2&C2	0.0100	ZN(HL)	0.0010	0.5952
C1	!A1&!A2&!B1&B2&C2	0.0100	ZN(HL)	0.0010	0.5558
C1	!A1&!A2&B1&!B2&C2	0.0100	ZN(HL)	0.0010	0.5554
C1	!A1&A2&!B1&!B2&C2	0.0100	ZN(HL)	0.0010	0.5569
C1	!A1&A2&!B1&B2&C2	0.0100	ZN(HL)	0.0010	0.5177
C1	!A1&A2&B1&!B2&C2	0.0100	ZN(HL)	0.0010	0.5180
C1	A1&!A2&!B1&!B2&C2	0.0100	ZN(HL)	0.0010	0.5568
C1	A1&!A2&!B1&B2&C2	0.0100	ZN(HL)	0.0010	0.5181
C1	A1&!A2&B1&!B2&C2	0.0100	ZN(HL)	0.0010	0.5178
A2	A1&!B1&!B2&!C1&!C2	0.0100	ZN(HL)	0.0010	0.0132
A2	A1&!B1&!B2&!C1&C2	0.0100	ZN(HL)	0.0010	0.0132
A2	A1&!B1&!B2&C1&!C2	0.0100	ZN(HL)	0.0010	0.0134
A2	A1&!B1&B2&!C1&!C2	0.0100	ZN(HL)	0.0010	0.0152
A2	A1&!B1&B2&!C1&C2	0.0100	ZN(HL)	0.0010	0.0152
A2	A1&!B1&B2&C1&!C2	0.0100	ZN(HL)	0.0010	0.0154
A2	A1&B1&!B2&!C1&!C2	0.0100	ZN(HL)	0.0010	0.0154
A2	A1&B1&!B2&!C1&C2	0.0100	ZN(HL)	0.0010	0.0154
A2	A1&B1&!B2&C1&!C2	0.0100	ZN(HL)	0.0010	0.0157
C2	!A1&!A2&!B1&!B2&C1	0.0100	ZN(HL)	0.0010	0.5947
C2	!A1&!A2&!B1&B2&C1	0.0100	ZN(HL)	0.0010	0.5552
C2	!A1&!A2&B1&!B2&C1	0.0100	ZN(HL)	0.0010	0.5557
C2	!A1&A2&!B1&!B2&C1	0.0100	ZN(HL)	0.0010	0.5568
C2	!A1&A2&!B1&B2&C1	0.0100	ZN(HL)	0.0010	0.5176
C2	!A1&A2&B1&!B2&C1	0.0100	ZN(HL)	0.0010	0.5179
C2	A1&!A2&!B1&!B2&C1	0.0100	ZN(HL)	0.0010	0.5567
C2	A1&!A2&!B1&B2&C1	0.0100	ZN(HL)	0.0010	0.5178
C2	A1&!A2&B1&!B2&C1	0.0100	ZN(HL)	0.0010	0.5175
C1	!A1&!A2&!B1&!B2&C2	0.0100	ZN(LH)	0.0010	1.7840
C1	!A1&!A2&!B1&B2&C2	0.0100	ZN(LH)	0.0010	1.6535
C1	!A1&!A2&B1&!B2&C2	0.0100	ZN(LH)	0.0010	1.9261
C1	!A1&A2&!B1&!B2&C2	0.0100	ZN(LH)	0.0010	1.6505
C1	!A1&A2&!B1&B2&C2	0.0100	ZN(LH)	0.0010	1.5199
C1	!A1&A2&B1&!B2&C2	0.0100	ZN(LH)	0.0010	1.7926
C1	A1&!A2&!B1&!B2&C2	0.0100	ZN(LH)	0.0010	1.9223
C1	A1&!A2&!B1&B2&C2	0.0100	ZN(LH)	0.0010	1.7915
C1	A1&!A2&B1&!B2&C2	0.0100	ZN(LH)	0.0010	2.0566
C2	!A1&!A2&!B1&!B2&C1	0.0100	ZN(LH)	0.0010	2.0196
C2	!A1&!A2&!B1&B2&C1	0.0100	ZN(LH)	0.0010	1.8889
C2	!A1&!A2&B1&!B2&C1	0.0100	ZN(LH)	0.0010	2.1493
C2	!A1&A2&!B1&!B2&C1	0.0100	ZN(LH)	0.0010	1.8862
C2	!A1&A2&!B1&B2&C1	0.0100	ZN(LH)	0.0010	1.7554
C2	!A1&A2&B1&!B2&C1	0.0100	ZN(LH)	0.0010	2.0161
C2	A1&!A2&!B1&!B2&C1	0.0100	ZN(LH)	0.0010	2.1454
C2	A1&!A2&!B1&B2&C1	0.0100	ZN(LH)	0.0010	2.0156
C2	A1&!A2&B1&!B2&C1	0.0100	ZN(LH)	0.0010	2.2753
A1	A2&!B1&!B2&!C1&!C2	0.0100	ZN(HL)	0.0010	0.0132
A1	A2&!B1&!B2&!C1&C2	0.0100	ZN(HL)	0.0010	0.0132

continues on next page

Table 185 – continued from previous page

A1	A2&!B1&!B2&C1&!C2	0.0100	ZN(HL)	0.0010	0.0134
A1	A2&!B1&B2&!C1&!C2	0.0100	ZN(HL)	0.0010	0.0156
A1	A2&!B1&B2&!C1&C2	0.0100	ZN(HL)	0.0010	0.0155
A1	A2&!B1&B2&C1&!C2	0.0100	ZN(HL)	0.0010	0.0153
A1	A2&B1&!B2&!C1&!C2	0.0100	ZN(HL)	0.0010	0.0153
A1	A2&B1&!B2&!C1&C2	0.0100	ZN(HL)	0.0010	0.0153
A1	A2&B1&!B2&C1&!C2	0.0100	ZN(HL)	0.0010	0.0154
B2	!A1&!A2&B1&!C1&!C2	0.0100	ZN(HL)	0.0010	0.3214
B2	!A1&!A2&B1&!C1&C2	0.0100	ZN(HL)	0.0010	0.3242
B2	!A1&!A2&B1&C1&!C2	0.0100	ZN(HL)	0.0010	0.3245
B2	!A1&A2&B1&!C1&!C2	0.0100	ZN(HL)	0.0010	0.2823
B2	!A1&A2&B1&!C1&C2	0.0100	ZN(HL)	0.0010	0.2850
B2	!A1&A2&B1&C1&!C2	0.0100	ZN(HL)	0.0010	0.2852
B2	A1&!A2&B1&!C1&!C2	0.0100	ZN(HL)	0.0010	0.2824
B2	A1&!A2&B1&!C1&C2	0.0100	ZN(HL)	0.0010	0.2851
B2	A1&!A2&B1&C1&!C2	0.0100	ZN(HL)	0.0010	0.2851
B2(LH)	!A1&!A2&!B1&!C1&!C2	0.0100	n/a	n/a	-0.2392
B2(LH)	!A1&!A2&!B1&!C1&C2	0.0100	n/a	n/a	-0.2390
B2(LH)	!A1&!A2&!B1&C1&!C2	0.0100	n/a	n/a	-0.2390
B2(LH)	!A1&A2&!B1&!C1&!C2	0.0100	n/a	n/a	-0.2389
B2(LH)	!A1&A2&!B1&!C1&C2	0.0100	n/a	n/a	-0.2387
B2(LH)	!A1&A2&!B1&C1&!C2	0.0100	n/a	n/a	-0.2387
B2(LH)	A1&!A2&!B1&!C1&!C2	0.0100	n/a	n/a	-0.2389
B2(LH)	A1&!A2&!B1&!C1&C2	0.0100	n/a	n/a	-0.2387
B2(LH)	A1&!A2&!B1&C1&!C2	0.0100	n/a	n/a	-0.2387
B2(LH)	!A1&!A2&!B1&C1&C2	0.0100	n/a	n/a	-0.0683
B2(LH)	!A1&!A2&B1&C1&C2	0.0100	n/a	n/a	-0.0721
B2(LH)	!A1&A2&!B1&C1&C2	0.0100	n/a	n/a	-0.0686
B2(LH)	!A1&A2&B1&C1&C2	0.0100	n/a	n/a	-0.0723
B2(LH)	A1&!A2&!B1&C1&C2	0.0100	n/a	n/a	-0.0686
B2(LH)	A1&!A2&B1&C1&C2	0.0100	n/a	n/a	-0.0723
B2(LH)	A1&A2&!B1&!C1&!C2	0.0100	n/a	n/a	-0.2387
B2(LH)	A1&A2&!B1&!C1&C2	0.0100	n/a	n/a	-0.2387
B2(LH)	A1&A2&!B1&C1&!C2	0.0100	n/a	n/a	-0.2386
B2(LH)	A1&A2&!B1&C1&C2	0.0100	n/a	n/a	-0.1280
B2(LH)	A1&A2&B1&!C1&!C2	0.0100	n/a	n/a	-0.1854
B2(LH)	A1&A2&B1&!C1&C2	0.0100	n/a	n/a	-0.1836
B2(LH)	A1&A2&B1&C1&!C2	0.0100	n/a	n/a	-0.1836
B2(LH)	A1&A2&B1&C1&C2	0.0100	n/a	n/a	-0.1358
C2(HL)	!A1&!A2&!B1&!B2&!C1	0.0100	n/a	n/a	0.2663
C2(HL)	!A1&!A2&!B1&B2&!C1	0.0100	n/a	n/a	0.2664
C2(HL)	!A1&!A2&B1&!B2&!C1	0.0100	n/a	n/a	0.2664
C2(HL)	!A1&A2&!B1&!B2&!C1	0.0100	n/a	n/a	0.2664
C2(HL)	!A1&A2&!B1&B2&!C1	0.0100	n/a	n/a	0.2664
C2(HL)	!A1&A2&B1&!B2&!C1	0.0100	n/a	n/a	0.2664
C2(HL)	A1&!A2&!B1&!B2&!C1	0.0100	n/a	n/a	0.2664
C2(HL)	A1&!A2&!B1&B2&!C1	0.0100	n/a	n/a	0.2664
C2(HL)	A1&!A2&B1&!B2&!C1	0.0100	n/a	n/a	0.2664
C2(HL)	!A1&!A2&B1&B2&!C1	0.0100	n/a	n/a	0.2390
C2(HL)	!A1&!A2&B1&B2&C1	0.0100	n/a	n/a	0.2385
C2(HL)	!A1&A2&B1&B2&!C1	0.0100	n/a	n/a	0.2391
C2(HL)	!A1&A2&B1&B2&C1	0.0100	n/a	n/a	0.2386

continues on next page

Table 185 – continued from previous page

C2(HL)	A1&!A2&B1&B2&!C1	0.0100	n/a	n/a	0.2390
C2(HL)	A1&!A2&B1&B2&C1	0.0100	n/a	n/a	0.2386
C2(HL)	A1&A2&!B1&!B2&!C1	0.0100	n/a	n/a	0.2389
C2(HL)	A1&A2&!B1&!B2&C1	0.0100	n/a	n/a	0.2336
C2(HL)	A1&A2&!B1&B2&!C1	0.0100	n/a	n/a	0.2390
C2(HL)	A1&A2&!B1&B2&C1	0.0100	n/a	n/a	0.2346
C2(HL)	A1&A2&B1&!B2&!C1	0.0100	n/a	n/a	0.2390
C2(HL)	A1&A2&B1&!B2&C1	0.0100	n/a	n/a	0.2344
C2(HL)	A1&A2&B1&B2&!C1	0.0100	n/a	n/a	0.2391
C2(HL)	A1&A2&B1&B2&C1	0.0100	n/a	n/a	0.2385
B2(HL)	!A1&!A2&!B1&!C1&!C2	0.0100	n/a	n/a	0.2665
B2(HL)	!A1&!A2&!B1&!C1&C2	0.0100	n/a	n/a	0.2659
B2(HL)	!A1&!A2&!B1&C1&!C2	0.0100	n/a	n/a	0.2659
B2(HL)	!A1&A2&!B1&!C1&!C2	0.0100	n/a	n/a	0.2666
B2(HL)	!A1&A2&!B1&!C1&C2	0.0100	n/a	n/a	0.2661
B2(HL)	!A1&A2&!B1&C1&!C2	0.0100	n/a	n/a	0.2661
B2(HL)	A1&!A2&!B1&!C1&!C2	0.0100	n/a	n/a	0.2666
B2(HL)	A1&!A2&!B1&!C1&C2	0.0100	n/a	n/a	0.2661
B2(HL)	A1&!A2&!B1&C1&!C2	0.0100	n/a	n/a	0.2661
B2(HL)	!A1&!A2&!B1&C1&C2	0.0100	n/a	n/a	0.0765
B2(HL)	!A1&!A2&B1&C1&C2	0.0100	n/a	n/a	0.2437
B2(HL)	!A1&A2&!B1&C1&C2	0.0100	n/a	n/a	0.0767
B2(HL)	!A1&A2&B1&C1&C2	0.0100	n/a	n/a	0.2428
B2(HL)	A1&!A2&!B1&C1&C2	0.0100	n/a	n/a	0.0767
B2(HL)	A1&!A2&B1&C1&C2	0.0100	n/a	n/a	0.2429
B2(HL)	A1&A2&!B1&!C1&!C2	0.0100	n/a	n/a	0.2397
B2(HL)	A1&A2&!B1&!C1&C2	0.0100	n/a	n/a	0.2393
B2(HL)	A1&A2&!B1&C1&!C2	0.0100	n/a	n/a	0.2393
B2(HL)	A1&A2&!B1&C1&C2	0.0100	n/a	n/a	0.1282
B2(HL)	A1&A2&B1&!C1&!C2	0.0100	n/a	n/a	0.2362
B2(HL)	A1&A2&B1&!C1&C2	0.0100	n/a	n/a	0.2360
B2(HL)	A1&A2&B1&C1&!C2	0.0100	n/a	n/a	0.2360
B2(HL)	A1&A2&B1&C1&C2	0.0100	n/a	n/a	0.1364
C2(LH)	!A1&!A2&!B1&!B2&!C1	0.0100	n/a	n/a	-0.2381
C2(LH)	!A1&!A2&!B1&B2&!C1	0.0100	n/a	n/a	-0.2380
C2(LH)	!A1&!A2&B1&!B2&!C1	0.0100	n/a	n/a	-0.2380
C2(LH)	!A1&A2&!B1&!B2&!C1	0.0100	n/a	n/a	-0.2380
C2(LH)	!A1&A2&!B1&B2&!C1	0.0100	n/a	n/a	-0.2379
C2(LH)	!A1&A2&B1&!B2&!C1	0.0100	n/a	n/a	-0.2379
C2(LH)	A1&!A2&!B1&!B2&!C1	0.0100	n/a	n/a	-0.2380
C2(LH)	A1&!A2&!B1&B2&!C1	0.0100	n/a	n/a	-0.2379
C2(LH)	A1&!A2&B1&!B2&!C1	0.0100	n/a	n/a	-0.2379
C2(LH)	!A1&!A2&B1&B2&!C1	0.0100	n/a	n/a	-0.2377
C2(LH)	!A1&!A2&B1&B2&C1	0.0100	n/a	n/a	-0.2014
C2(LH)	!A1&A2&B1&B2&!C1	0.0100	n/a	n/a	-0.2377
C2(LH)	!A1&A2&B1&B2&C1	0.0100	n/a	n/a	-0.2015
C2(LH)	A1&!A2&B1&B2&!C1	0.0100	n/a	n/a	-0.2377
C2(LH)	A1&!A2&B1&B2&C1	0.0100	n/a	n/a	-0.2016
C2(LH)	A1&A2&!B1&!B2&!C1	0.0100	n/a	n/a	-0.2379
C2(LH)	A1&A2&!B1&!B2&C1	0.0100	n/a	n/a	-0.1898
C2(LH)	A1&A2&!B1&B2&!C1	0.0100	n/a	n/a	-0.2377
C2(LH)	A1&A2&!B1&B2&C1	0.0100	n/a	n/a	-0.1948

continues on next page

Table 185 – continued from previous page

C2(LH)	A1&A2&B1&!B2&!C1	0.0100	n/a	n/a	-0.2377
C2(LH)	A1&A2&B1&!B2&C1	0.0100	n/a	n/a	-0.1948
C2(LH)	A1&A2&B1&B2&!C1	0.0100	n/a	n/a	-0.2377
C2(LH)	A1&A2&B1&B2&C1	0.0100	n/a	n/a	-0.2082
A2(LH)	!A1&!B1&!B2&!C1&!C2	0.0100	n/a	n/a	-0.2399
A2(LH)	!A1&!B1&!B2&!C1&C2	0.0100	n/a	n/a	-0.2399
A2(LH)	!A1&!B1&!B2&C1&!C2	0.0100	n/a	n/a	-0.2398
A2(LH)	!A1&!B1&B2&!C1&!C2	0.0100	n/a	n/a	-0.2397
A2(LH)	!A1&!B1&B2&!C1&C2	0.0100	n/a	n/a	-0.2396
A2(LH)	!A1&!B1&B2&C1&!C2	0.0100	n/a	n/a	-0.2396
A2(LH)	!A1&B1&!B2&!C1&!C2	0.0100	n/a	n/a	-0.2397
A2(LH)	!A1&B1&!B2&!C1&C2	0.0100	n/a	n/a	-0.2396
A2(LH)	!A1&B1&!B2&C1&!C2	0.0100	n/a	n/a	-0.2396
A2(LH)	!A1&!B1&!B2&C1&C2	0.0100	n/a	n/a	-0.0583
A2(LH)	!A1&!B1&B2&C1&C2	0.0100	n/a	n/a	-0.0579
A2(LH)	!A1&B1&!B2&C1&C2	0.0100	n/a	n/a	-0.0579
A2(LH)	!A1&B1&B2&!C1&!C2	0.0100	n/a	n/a	-0.0582
A2(LH)	!A1&B1&B2&!C1&C2	0.0100	n/a	n/a	-0.0582
A2(LH)	!A1&B1&B2&C1&!C2	0.0100	n/a	n/a	-0.0582
A2(LH)	!A1&B1&B2&C1&C2	0.0100	n/a	n/a	-0.0582
A2(LH)	A1&!B1&!B2&C1&C2	0.0100	n/a	n/a	-0.0617
A2(LH)	A1&!B1&B2&C1&C2	0.0100	n/a	n/a	-0.0619
A2(LH)	A1&B1&!B2&C1&C2	0.0100	n/a	n/a	-0.0619
A2(LH)	A1&B1&B2&!C1&!C2	0.0100	n/a	n/a	-0.0620
A2(LH)	A1&B1&B2&!C1&C2	0.0100	n/a	n/a	-0.0620
A2(LH)	A1&B1&B2&C1&!C2	0.0100	n/a	n/a	-0.0620
A2(LH)	A1&B1&B2&C1&C2	0.0100	n/a	n/a	-0.0620
A1(LH)	!A2&!B1&!B2&!C1&!C2	0.0100	n/a	n/a	-0.1800
A1(LH)	!A2&!B1&!B2&!C1&C2	0.0100	n/a	n/a	-0.1799
A1(LH)	!A2&!B1&!B2&C1&!C2	0.0100	n/a	n/a	-0.1799
A1(LH)	!A2&!B1&B2&!C1&!C2	0.0100	n/a	n/a	-0.1799
A1(LH)	!A2&!B1&B2&!C1&C2	0.0100	n/a	n/a	-0.1799
A1(LH)	!A2&!B1&B2&C1&!C2	0.0100	n/a	n/a	-0.1799
A1(LH)	!A2&B1&!B2&!C1&!C2	0.0100	n/a	n/a	-0.1799
A1(LH)	!A2&B1&!B2&!C1&C2	0.0100	n/a	n/a	-0.1799
A1(LH)	!A2&B1&!B2&C1&!C2	0.0100	n/a	n/a	-0.1799
A1(LH)	!A2&!B1&!B2&C1&C2	0.0100	n/a	n/a	-0.0583
A1(LH)	!A2&!B1&B2&C1&C2	0.0100	n/a	n/a	-0.0579
A1(LH)	!A2&B1&!B2&C1&C2	0.0100	n/a	n/a	-0.0579
A1(LH)	!A2&B1&B2&!C1&!C2	0.0100	n/a	n/a	-0.0581
A1(LH)	!A2&B1&B2&!C1&C2	0.0100	n/a	n/a	-0.0581
A1(LH)	!A2&B1&B2&C1&!C2	0.0100	n/a	n/a	-0.0581
A1(LH)	!A2&B1&B2&C1&C2	0.0100	n/a	n/a	-0.0581
A1(LH)	A2&!B1&!B2&C1&C2	0.0100	n/a	n/a	-0.0617
A1(LH)	A2&!B1&B2&C1&C2	0.0100	n/a	n/a	-0.0619
A1(LH)	A2&B1&!B2&C1&C2	0.0100	n/a	n/a	-0.0620
A1(LH)	A2&B1&B2&!C1&!C2	0.0100	n/a	n/a	-0.0621
A1(LH)	A2&B1&B2&!C1&C2	0.0100	n/a	n/a	-0.0621
A1(LH)	A2&B1&B2&C1&!C2	0.0100	n/a	n/a	-0.0621
A1(LH)	A2&B1&B2&C1&C2	0.0100	n/a	n/a	-0.0621
C1(LH)	!A1&!A2&!B1&!B2&!C2	0.0100	n/a	n/a	-0.1779
C1(LH)	!A1&!A2&!B1&B2&!C2	0.0100	n/a	n/a	-0.1780

continues on next page

Table 185 – continued from previous page

C1(LH)	!A1&!A2&B1&!B2&!C2	0.0100	n/a	n/a	-0.1780
C1(LH)	!A1&A2&!B1&!B2&!C2	0.0100	n/a	n/a	-0.1779
C1(LH)	!A1&A2&!B1&B2&!C2	0.0100	n/a	n/a	-0.1780
C1(LH)	!A1&A2&B1&!B2&!C2	0.0100	n/a	n/a	-0.1780
C1(LH)	A1&!A2&!B1&!B2&!C2	0.0100	n/a	n/a	-0.1779
C1(LH)	A1&!A2&!B1&B2&!C2	0.0100	n/a	n/a	-0.1780
C1(LH)	A1&!A2&B1&!B2&!C2	0.0100	n/a	n/a	-0.1780
C1(LH)	!A1&!A2&B1&B2&!C2	0.0100	n/a	n/a	-0.2375
C1(LH)	!A1&!A2&B1&B2&C2	0.0100	n/a	n/a	-0.2012
C1(LH)	!A1&A2&B1&B2&!C2	0.0100	n/a	n/a	-0.2375
C1(LH)	!A1&A2&B1&B2&C2	0.0100	n/a	n/a	-0.2013
C1(LH)	A1&!A2&B1&B2&!C2	0.0100	n/a	n/a	-0.2375
C1(LH)	A1&!A2&B1&B2&C2	0.0100	n/a	n/a	-0.2014
C1(LH)	A1&A2&!B1&!B2&!C2	0.0100	n/a	n/a	-0.2374
C1(LH)	A1&A2&!B1&!B2&C2	0.0100	n/a	n/a	-0.1896
C1(LH)	A1&A2&!B1&B2&!C2	0.0100	n/a	n/a	-0.2374
C1(LH)	A1&A2&!B1&B2&C2	0.0100	n/a	n/a	-0.1944
C1(LH)	A1&A2&B1&!B2&!C2	0.0100	n/a	n/a	-0.2374
C1(LH)	A1&A2&B1&!B2&C2	0.0100	n/a	n/a	-0.1945
C1(LH)	A1&A2&B1&B2&!C2	0.0100	n/a	n/a	-0.2375
C1(LH)	A1&A2&B1&B2&C2	0.0100	n/a	n/a	-0.2080
A2(HL)	!A1&!B1&!B2&!C1&!C2	0.0100	n/a	n/a	0.2661
A2(HL)	!A1&!B1&!B2&!C1&C2	0.0100	n/a	n/a	0.2659
A2(HL)	!A1&!B1&!B2&C1&!C2	0.0100	n/a	n/a	0.2659
A2(HL)	!A1&!B1&B2&!C1&!C2	0.0100	n/a	n/a	0.2657
A2(HL)	!A1&!B1&B2&!C1&C2	0.0100	n/a	n/a	0.2655
A2(HL)	!A1&!B1&B2&C1&!C2	0.0100	n/a	n/a	0.2655
A2(HL)	!A1&B1&!B2&!C1&!C2	0.0100	n/a	n/a	0.2657
A2(HL)	!A1&B1&!B2&!C1&C2	0.0100	n/a	n/a	0.2655
A2(HL)	!A1&B1&!B2&C1&!C2	0.0100	n/a	n/a	0.2655
A2(HL)	!A1&!B1&!B2&C1&C2	0.0100	n/a	n/a	0.0612
A2(HL)	!A1&!B1&B2&C1&C2	0.0100	n/a	n/a	0.0614
A2(HL)	!A1&B1&!B2&C1&C2	0.0100	n/a	n/a	0.0614
A2(HL)	!A1&B1&B2&!C1&!C2	0.0100	n/a	n/a	0.0615
A2(HL)	!A1&B1&B2&!C1&C2	0.0100	n/a	n/a	0.0615
A2(HL)	!A1&B1&B2&C1&!C2	0.0100	n/a	n/a	0.0615
A2(HL)	!A1&B1&B2&C1&C2	0.0100	n/a	n/a	0.0615
A2(HL)	A1&!B1&!B2&C1&C2	0.0100	n/a	n/a	0.5637
A2(HL)	A1&!B1&B2&C1&C2	0.0100	n/a	n/a	0.5265
A2(HL)	A1&B1&!B2&C1&C2	0.0100	n/a	n/a	0.5267
A2(HL)	A1&B1&B2&!C1&!C2	0.0100	n/a	n/a	0.2821
A2(HL)	A1&B1&B2&!C1&C2	0.0100	n/a	n/a	0.2820
A2(HL)	A1&B1&B2&C1&!C2	0.0100	n/a	n/a	0.2821
A2(HL)	A1&B1&B2&C1&C2	0.0100	n/a	n/a	0.2820
B1(HL)	!A1&!A2&!B2&!C1&!C2	0.0100	n/a	n/a	0.2686
B1(HL)	!A1&!A2&!B2&!C1&C2	0.0100	n/a	n/a	0.2680
B1(HL)	!A1&!A2&!B2&C1&!C2	0.0100	n/a	n/a	0.2680
B1(HL)	!A1&A2&!B2&!C1&!C2	0.0100	n/a	n/a	0.2685
B1(HL)	!A1&A2&!B2&!C1&C2	0.0100	n/a	n/a	0.2678
B1(HL)	!A1&A2&!B2&C1&!C2	0.0100	n/a	n/a	0.2678
B1(HL)	A1&!A2&!B2&!C1&!C2	0.0100	n/a	n/a	0.2685
B1(HL)	A1&!A2&!B2&!C1&C2	0.0100	n/a	n/a	0.2678

continues on next page

Table 185 – continued from previous page

B1(HL)	A1&!A2&!B2&C1&!C2	0.0100	n/a	n/a	0.2678
B1(HL)	!A1&!A2&!B2&C1&C2	0.0100	n/a	n/a	0.0763
B1(HL)	!A1&!A2&B2&C1&C2	0.0100	n/a	n/a	0.2436
B1(HL)	!A1&A2&!B2&C1&C2	0.0100	n/a	n/a	0.0765
B1(HL)	!A1&A2&B2&C1&C2	0.0100	n/a	n/a	0.2427
B1(HL)	A1&!A2&!B2&C1&C2	0.0100	n/a	n/a	0.0765
B1(HL)	A1&!A2&B2&C1&C2	0.0100	n/a	n/a	0.2427
B1(HL)	A1&A2&!B2&!C1&!C2	0.0100	n/a	n/a	0.2391
B1(HL)	A1&A2&!B2&!C1&C2	0.0100	n/a	n/a	0.2388
B1(HL)	A1&A2&!B2&C1&!C2	0.0100	n/a	n/a	0.2388
B1(HL)	A1&A2&!B2&C1&C2	0.0100	n/a	n/a	0.1278
B1(HL)	A1&A2&B2&!C1&!C2	0.0100	n/a	n/a	0.2360
B1(HL)	A1&A2&B2&!C1&C2	0.0100	n/a	n/a	0.2358
B1(HL)	A1&A2&B2&C1&!C2	0.0100	n/a	n/a	0.2358
B1(HL)	A1&A2&B2&C1&C2	0.0100	n/a	n/a	0.1362
C1(HL)	!A1&!A2&!B1&!B2&!C2	0.0100	n/a	n/a	0.2680
C1(HL)	!A1&!A2&!B1&B2&!C2	0.0100	n/a	n/a	0.2680
C1(HL)	!A1&!A2&B1&!B2&!C2	0.0100	n/a	n/a	0.2680
C1(HL)	!A1&A2&!B1&!B2&!C2	0.0100	n/a	n/a	0.2679
C1(HL)	!A1&A2&!B1&B2&!C2	0.0100	n/a	n/a	0.2680
C1(HL)	!A1&A2&B1&!B2&!C2	0.0100	n/a	n/a	0.2680
C1(HL)	A1&!A2&!B1&!B2&!C2	0.0100	n/a	n/a	0.2679
C1(HL)	A1&!A2&!B1&B2&!C2	0.0100	n/a	n/a	0.2680
C1(HL)	A1&!A2&B1&!B2&!C2	0.0100	n/a	n/a	0.2680
C1(HL)	!A1&!A2&B1&B2&!C2	0.0100	n/a	n/a	0.2386
C1(HL)	!A1&!A2&B1&B2&C2	0.0100	n/a	n/a	0.2384
C1(HL)	!A1&A2&B1&B2&!C2	0.0100	n/a	n/a	0.2386
C1(HL)	!A1&A2&B1&B2&C2	0.0100	n/a	n/a	0.2384
C1(HL)	A1&!A2&B1&B2&!C2	0.0100	n/a	n/a	0.2385
C1(HL)	A1&!A2&B1&B2&C2	0.0100	n/a	n/a	0.2384
C1(HL)	A1&A2&!B1&!B2&!C2	0.0100	n/a	n/a	0.2384
C1(HL)	A1&A2&!B1&!B2&C2	0.0100	n/a	n/a	0.2332
C1(HL)	A1&A2&!B1&B2&!C2	0.0100	n/a	n/a	0.2384
C1(HL)	A1&A2&!B1&B2&C2	0.0100	n/a	n/a	0.2343
C1(HL)	A1&A2&B1&!B2&!C2	0.0100	n/a	n/a	0.2385
C1(HL)	A1&A2&B1&!B2&C2	0.0100	n/a	n/a	0.2343
C1(HL)	A1&A2&B1&B2&!C2	0.0100	n/a	n/a	0.2386
C1(HL)	A1&A2&B1&B2&C2	0.0100	n/a	n/a	0.2383
A1(HL)	!A2&!B1&!B2&!C1&!C2	0.0100	n/a	n/a	0.2691
A1(HL)	!A2&!B1&!B2&!C1&C2	0.0100	n/a	n/a	0.2686
A1(HL)	!A2&!B1&!B2&C1&!C2	0.0100	n/a	n/a	0.2686
A1(HL)	!A2&!B1&B2&!C1&!C2	0.0100	n/a	n/a	0.2686
A1(HL)	!A2&!B1&B2&!C1&C2	0.0100	n/a	n/a	0.2683
A1(HL)	!A2&!B1&B2&C1&!C2	0.0100	n/a	n/a	0.2684
A1(HL)	!A2&B1&!B2&!C1&!C2	0.0100	n/a	n/a	0.2686
A1(HL)	!A2&B1&!B2&!C1&C2	0.0100	n/a	n/a	0.2684
A1(HL)	!A2&B1&!B2&C1&!C2	0.0100	n/a	n/a	0.2684
A1(HL)	!A2&!B1&!B2&C1&C2	0.0100	n/a	n/a	0.0610
A1(HL)	!A2&!B1&B2&C1&C2	0.0100	n/a	n/a	0.0612
A1(HL)	!A2&B1&!B2&C1&C2	0.0100	n/a	n/a	0.0612
A1(HL)	!A2&B1&B2&!C1&!C2	0.0100	n/a	n/a	0.0613
A1(HL)	!A2&B1&B2&!C1&C2	0.0100	n/a	n/a	0.0613

continues on next page

Table 185 – continued from previous page

A1(HL)	!A2&B1&B2&C1&!C2	0.0100	n/a	n/a	0.0613
A1(HL)	!A2&B1&B2&C1&C2	0.0100	n/a	n/a	0.0613
A1(HL)	A2&!B1&!B2&C1&C2	0.0100	n/a	n/a	0.5633
A1(HL)	A2&!B1&B2&C1&C2	0.0100	n/a	n/a	0.5261
A1(HL)	A2&B1&!B2&C1&C2	0.0100	n/a	n/a	0.5264
A1(HL)	A2&B1&B2&!C1&!C2	0.0100	n/a	n/a	0.2817
A1(HL)	A2&B1&B2&!C1&C2	0.0100	n/a	n/a	0.2818
A1(HL)	A2&B1&B2&C1&!C2	0.0100	n/a	n/a	0.2818
A1(HL)	A2&B1&B2&C1&C2	0.0100	n/a	n/a	0.2817
B1(LH)	!A1&!A2&!B2&!C1&!C2	0.0100	n/a	n/a	-0.1784
B1(LH)	!A1&!A2&!B2&!C1&C2	0.0100	n/a	n/a	-0.1785
B1(LH)	!A1&!A2&!B2&C1&!C2	0.0100	n/a	n/a	-0.1785
B1(LH)	!A1&A2&!B2&!C1&!C2	0.0100	n/a	n/a	-0.1783
B1(LH)	!A1&A2&!B2&!C1&C2	0.0100	n/a	n/a	-0.1783
B1(LH)	!A1&A2&!B2&C1&!C2	0.0100	n/a	n/a	-0.1783
B1(LH)	A1&!A2&!B2&!C1&!C2	0.0100	n/a	n/a	-0.1783
B1(LH)	A1&!A2&!B2&!C1&C2	0.0100	n/a	n/a	-0.1783
B1(LH)	A1&!A2&!B2&C1&!C2	0.0100	n/a	n/a	-0.1783
B1(LH)	!A1&!A2&!B2&C1&C2	0.0100	n/a	n/a	-0.0683
B1(LH)	!A1&!A2&B2&C1&C2	0.0100	n/a	n/a	-0.0722
B1(LH)	!A1&A2&!B2&C1&C2	0.0100	n/a	n/a	-0.0686
B1(LH)	!A1&A2&B2&C1&C2	0.0100	n/a	n/a	-0.0724
B1(LH)	A1&!A2&!B2&C1&C2	0.0100	n/a	n/a	-0.0687
B1(LH)	A1&!A2&B2&C1&C2	0.0100	n/a	n/a	-0.0724
B1(LH)	A1&A2&!B2&!C1&!C2	0.0100	n/a	n/a	-0.2386
B1(LH)	A1&A2&!B2&!C1&C2	0.0100	n/a	n/a	-0.2384
B1(LH)	A1&A2&!B2&C1&!C2	0.0100	n/a	n/a	-0.2385
B1(LH)	A1&A2&!B2&C1&C2	0.0100	n/a	n/a	-0.1277
B1(LH)	A1&A2&B2&!C1&!C2	0.0100	n/a	n/a	-0.1853
B1(LH)	A1&A2&B2&!C1&C2	0.0100	n/a	n/a	-0.1835
B1(LH)	A1&A2&B2&C1&!C2	0.0100	n/a	n/a	-0.1835
B1(LH)	A1&A2&B2&C1&C2	0.0100	n/a	n/a	-0.1358

LEAKAGE POWER

When Condition	Power (nW)
!A1&!A2&!B1&!B2&!C1&!C2	0.3531
!A1&!A2&!B1&!B2&!C1&C2	0.3544
!A1&!A2&!B1&!B2&C1&!C2	0.5134
!A1&!A2&!B1&B2&!C1&!C2	0.3544
!A1&!A2&!B1&B2&!C1&C2	0.3557
!A1&!A2&!B1&B2&C1&!C2	0.5147
!A1&!A2&B1&!B2&!C1&!C2	0.5134
!A1&!A2&B1&!B2&!C1&C2	0.5147
!A1&!A2&B1&!B2&C1&!C2	0.6738
!A1&A2&!B1&!B2&!C1&!C2	0.3544
!A1&A2&!B1&!B2&!C1&C2	0.3557

continues on next page

Table 186 – continued from previous page

!A1&A2&!B1&!B2&C1&!C2	0.5147
!A1&A2&!B1&B2&!C1&!C2	0.3557
!A1&A2&!B1&B2&!C1&C2	0.3570
!A1&A2&!B1&B2&C1&!C2	0.5160
!A1&A2&B1&!B2&!C1&!C2	0.5147
!A1&A2&B1&!B2&!C1&C2	0.5160
!A1&A2&B1&!B2&C1&!C2	0.6751
A1&!A2&!B1&!B2&!C1&!C2	0.5134
A1&!A2&!B1&!B2&!C1&C2	0.5147
A1&!A2&!B1&!B2&C1&!C2	0.6738
A1&!A2&!B1&B2&!C1&!C2	0.5147
A1&!A2&!B1&B2&!C1&C2	0.5160
A1&!A2&!B1&B2&C1&!C2	0.6751
A1&!A2&B1&!B2&!C1&!C2	0.6738
A1&!A2&B1&!B2&!C1&C2	0.6751
A1&!A2&B1&!B2&C1&!C2	0.8342
!A1&!A2&!B1&!B2&C1&C2	0.8311
!A1&!A2&!B1&B2&C1&C2	0.8403
!A1&!A2&B1&!B2&C1&C2	0.8403
!A1&!A2&B1&B2&!C1&!C2	0.5490
!A1&!A2&B1&B2&!C1&C2	0.5490
!A1&!A2&B1&B2&C1&!C2	0.5490
!A1&!A2&B1&B2&C1&C2	0.5489
!A1&A2&!B1&!B2&C1&C2	0.8417
!A1&A2&!B1&B2&C1&C2	0.8511
!A1&A2&B1&!B2&C1&C2	0.8511
!A1&A2&B1&B2&!C1&!C2	0.5601
!A1&A2&B1&B2&!C1&C2	0.5601
!A1&A2&B1&B2&C1&!C2	0.5601
!A1&A2&B1&B2&C1&C2	0.5600
A1&!A2&!B1&!B2&C1&C2	0.8417
A1&!A2&!B1&B2&C1&C2	0.8511
A1&!A2&B1&!B2&C1&C2	0.8511
A1&!A2&B1&B2&!C1&!C2	0.5601
A1&!A2&B1&B2&!C1&C2	0.5601
A1&!A2&B1&B2&C1&!C2	0.5601
A1&!A2&B1&B2&C1&C2	0.5600
A1&A2&!B1&!B2&!C1&!C2	0.2649
A1&A2&!B1&!B2&!C1&C2	0.2649
A1&A2&!B1&!B2&C1&!C2	0.2649
A1&A2&!B1&!B2&C1&C2	0.2628
A1&A2&!B1&B2&!C1&!C2	0.2649
A1&A2&!B1&B2&!C1&C2	0.2649
A1&A2&!B1&B2&C1&!C2	0.2649
A1&A2&!B1&B2&C1&C2	0.2630
A1&A2&B1&!B2&!C1&!C2	0.2649
A1&A2&B1&!B2&!C1&C2	0.2649
A1&A2&B1&!B2&C1&!C2	0.2649
A1&A2&B1&!B2&C1&C2	0.2630
A1&A2&B1&B2&!C1&!C2	0.2634
A1&A2&B1&B2&!C1&C2	0.2634
A1&A2&B1&B2&C1&!C2	0.2634

continues on next page

Table 186 – continued from previous page

A1&A2&B1&B2&C1&C2	0.2633

gf180mcu_fd_sc_mcu9t5v0__buf_1

gf180mcu_fd_sc_mcu9t5v0__buf_1 symbol

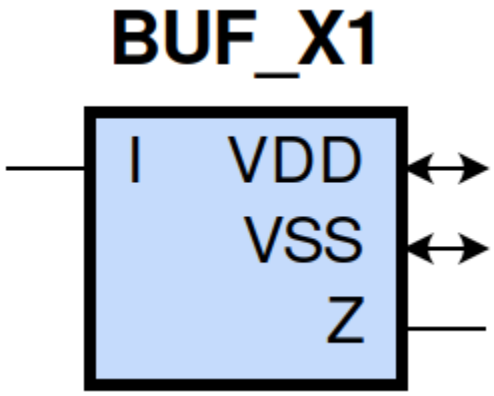

gf180mcu_fd_sc_mcu9t5v0__buf_1 schematic

gf180mcu_fd_sc_mcu9t5v0__buf_1 layout

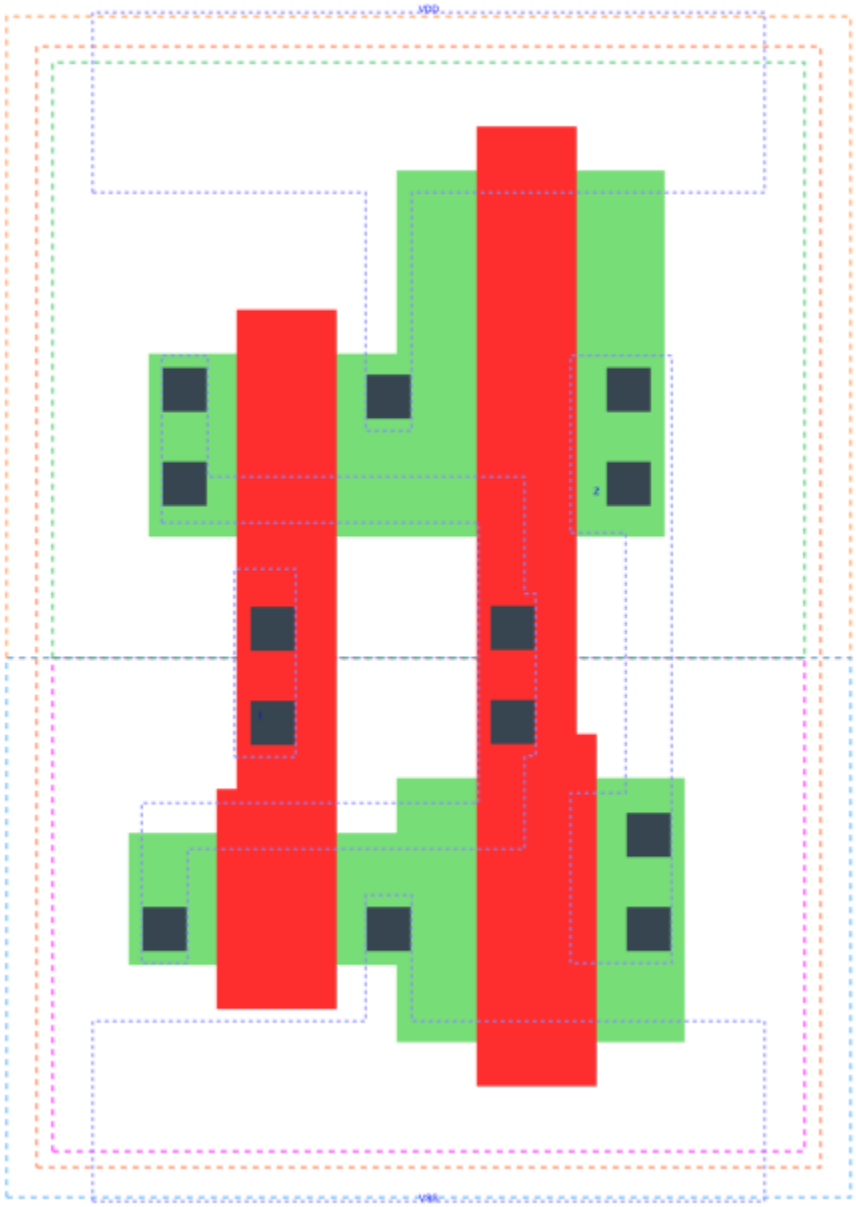

BUF_X1 is a buffer with 1X drive strength

Attributes

Attribute	Value
area	16.934400 μm^2

OUTPUT FUNCTIONS

Output Pin	Function
Z	I

TRUTH TABLE FOR Z

I	Z
1	1
0	0

FUNCTIONAL SCHEMATIC

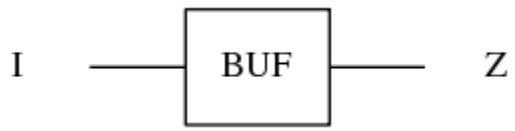

PIN CAPACITANCE (pf)

Pin	Type	Capacitance (pf)
I	input	0.0039

DELAY AND OUTPUT TRANSITION TIME corresponding to min slew and load

Input Pin	Output	When Condition	Tin (ns)	Out Load (pf)	Delay (ns)	Tout (ns)
I(LH)	Z(LH)	default	0.0100	0.0010	0.1340	0.0326
I(HL)	Z(HL)	default	0.0100	0.0010	0.1593	0.0323

DYNAMIC ENERGY

Input Pin	When Condition	Tin (ns)	Output	Out Load (pf)	Energy (uW/MHz)
I	default	0.0100	Z(LH)	0.0010	0.1429
I	default	0.0100	Z(HL)	0.0010	0.2485

LEAKAGE POWER

When Condition	Power (nW)
!I	0.1023
I	0.1019

gf180mcu_fd_sc_mcu9t5v0__buf_x12

gf180mcu_fd_sc_mcu9t5v0__buf_x12 symbol

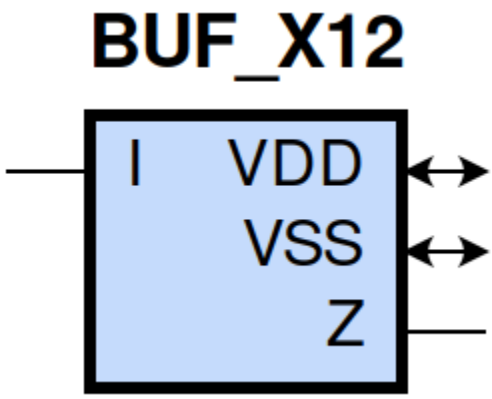

gf180mcu_fd_sc_mcu9t5v0__buf_x12 schematic

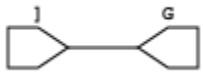

gf180mcu_fd_sc_mcu9t5v0__buf_x12 layout

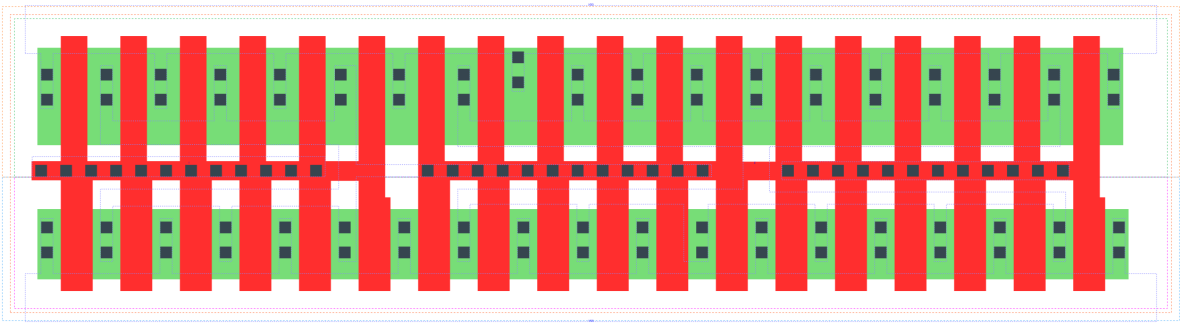

BUF_X12 is a buffer with 12X drive strength

Attributes

Attribute	Value
area	107.251200 μm^2

OUTPUT FUNCTIONS

Output Pin	Function
Z	I

TRUTH TABLE FOR Z

I	Z
1	1
0	0

FUNCTIONAL SCHEMATIC

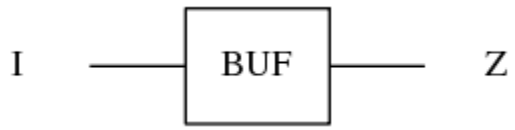

PIN CAPACITANCE (pf)

Pin	Type	Capacitance (pf)
I	input	0.0415

DELAY AND OUTPUT TRANSITION TIME corresponding to min slew and load

Input Pin	Output	When Condition	Tin (ns)	Out Load (pf)	Delay (ns)	Tout (ns)
I(LH)	Z(LH)	default	0.0100	0.0010	0.1153	0.0229
I(HL)	Z(HL)	default	0.0100	0.0010	0.1340	0.0236

DYNAMIC ENERGY

Input Pin	When Condition	Tin (ns)	Output	Out Load (pf)	Energy (uW/MHz)
I	default	0.0100	Z(LH)	0.0010	1.4884
I	default	0.0100	Z(HL)	0.0010	2.6522

LEAKAGE POWER

When Condition	Power (nW)
!I	0.5257
I	0.5181

gf180mcu_fd_sc_mcu9t5v0__buf_x16

gf180mcu_fd_sc_mcu9t5v0__buf_x16 symbol

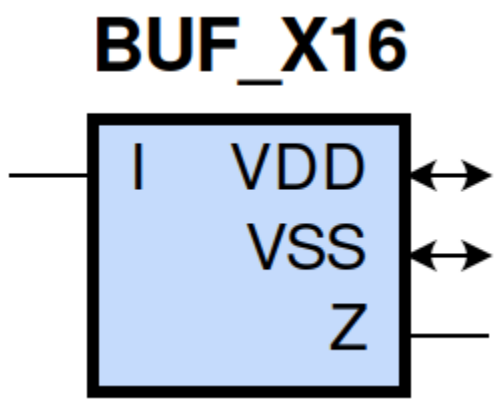

gf180mcu_fd_sc_mcu9t5v0__buf_x16 schematic

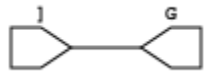

gf180mcu_fd_sc_mcu9t5v0__buf_x16 layout

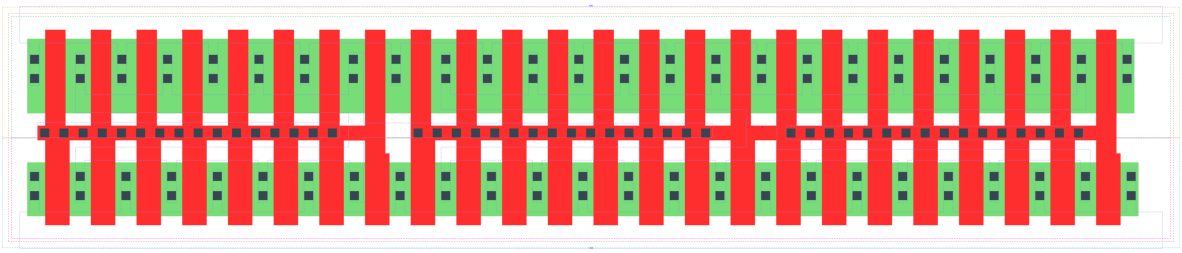

BUF_X16 is a buffer with 16X drive strength

Attributes

Attribute	Value
area	141.120000 μm^2

OUTPUT FUNCTIONS

Output Pin	Function
Z	I

TRUTH TABLE FOR Z

I	Z
1	1
0	0

FUNCTIONAL SCHEMATIC

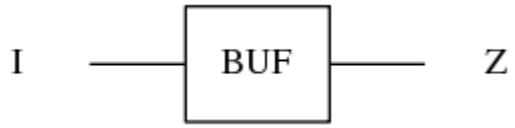

PIN CAPACITANCE (pf)

Pin	Type	Capacitance (pf)
I	input	0.0553

DELAY AND OUTPUT TRANSITION TIME corresponding to min slew and load

Input Pin	Output	When Condition	Tin (ns)	Out Load (pf)	Delay (ns)	Tout (ns)
I(LH)	Z(LH)	default	0.0100	0.0010	0.1155	0.0229
I(HL)	Z(HL)	default	0.0100	0.0010	0.1342	0.0236

DYNAMIC ENERGY

Input Pin	When Condition	Tin (ns)	Output	Out Load (pf)	Energy (uW/MHz)
I	default	0.0100	Z(LH)	0.0010	1.9846
I	default	0.0100	Z(HL)	0.0010	3.5401

LEAKAGE POWER

When Condition	Power (nW)
!I	0.6843
I	0.6741

gf180mcu_fd_sc_mcu9t5v0__buf_2

gf180mcu_fd_sc_mcu9t5v0__buf_2 symbol

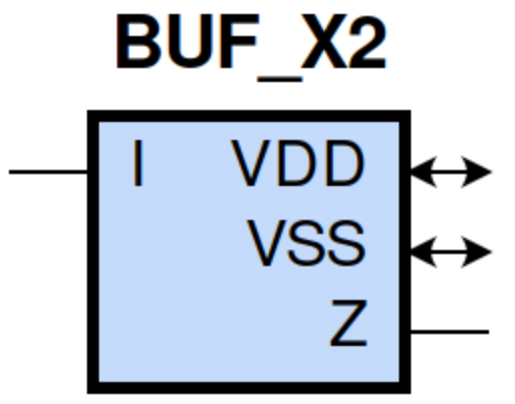

gf180mcu_fd_sc_mcu9t5v0__buf_2 schematic

gf180mcu_fd_sc_mcu9t5v0__buf_2 layout

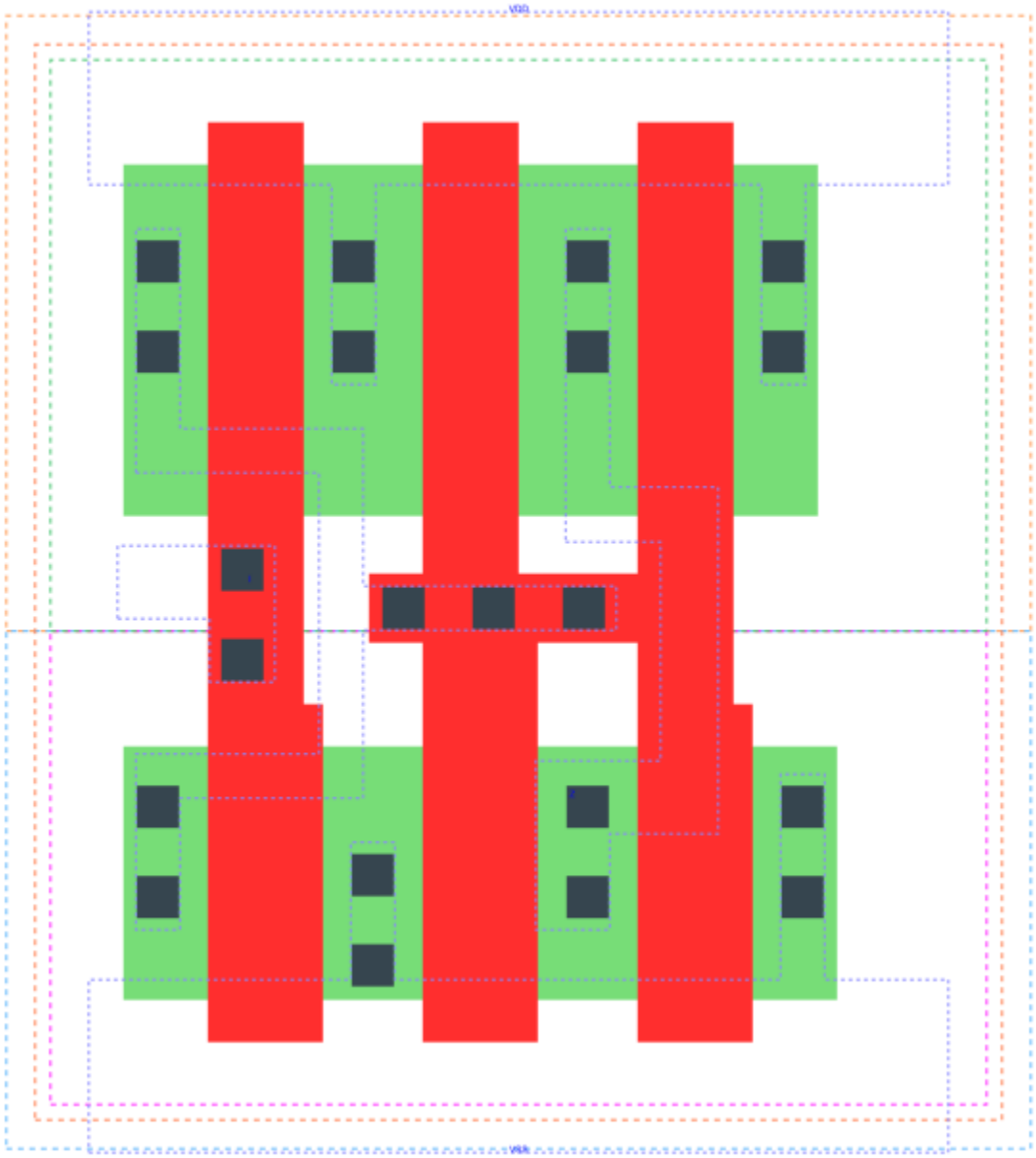

BUF_X2 is a buffer with 2X drive strength

Attributes

Attribute	Value
area	22.579200 μm^2

OUTPUT FUNCTIONS

Output Pin	Function
Z	I

TRUTH TABLE FOR Z

I	Z
1	1
0	0

FUNCTIONAL SCHEMATIC

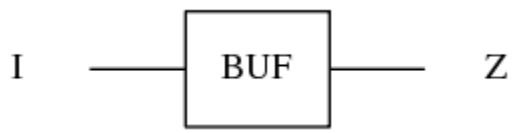

PIN CAPACITANCE (pf)

Pin	Type	Capacitance (pf)
I	input	0.0071

DELAY AND OUTPUT TRANSITION TIME corresponding to min slew and load

Input Pin	Output	When Condition	Tin (ns)	Out Load (pf)	Delay (ns)	Tout (ns)
I(LH)	Z(LH)	default	0.0100	0.0010	0.1227	0.0246
I(HL)	Z(HL)	default	0.0100	0.0010	0.1424	0.0255

DYNAMIC ENERGY

Input Pin	When Condition	Tin (ns)	Output	Out Load (pf)	Energy (uW/MHz)
I	default	0.0100	Z(LH)	0.0010	0.2531
I	default	0.0100	Z(HL)	0.0010	0.4651

LEAKAGE POWER

When Condition	Power (nW)
!I	0.1293
I	0.1280

gf180mcu_fd_sc_mcu9t5v0__buf_x20

gf180mcu_fd_sc_mcu9t5v0__buf_x20 symbol

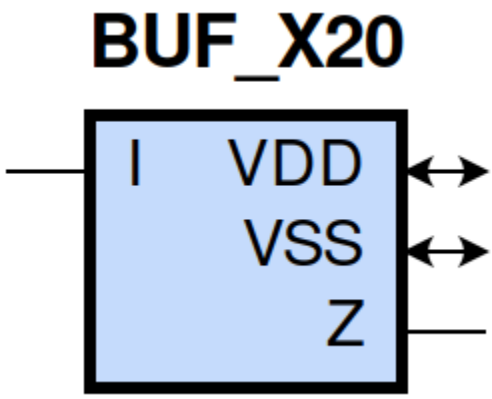

gf180mcu_fd_sc_mcu9t5v0__buf_x20 schematic

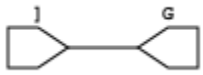

gf180mcu_fd_sc_mcu9t5v0__buf_x20 layout

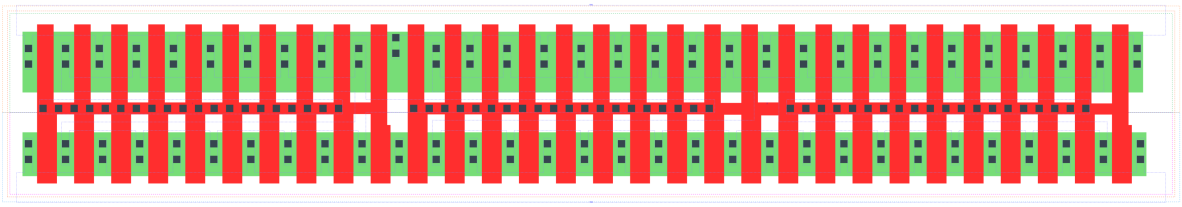

BUF_X20 is a buffer with 20X drive strength

Attributes

Attribute	Value
area	174.988800 μm^2

OUTPUT FUNCTIONS

Output Pin	Function
Z	I

TRUTH TABLE FOR Z

I	Z
1	1
0	0

FUNCTIONAL SCHEMATIC

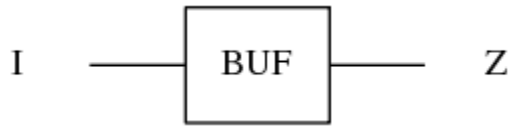

PIN CAPACITANCE (pf)

Pin	Type	Capacitance (pf)
I	input	0.0691

DELAY AND OUTPUT TRANSITION TIME corresponding to min slew and load

Input Pin	Output	When Condition	Tin (ns)	Out Load (pf)	Delay (ns)	Tout (ns)
I(LH)	Z(LH)	default	0.0100	0.0010	0.1164	0.0232
I(HL)	Z(HL)	default	0.0100	0.0010	0.1351	0.0238

DYNAMIC ENERGY

Input Pin	When Condition	Tin (ns)	Output	Out Load (pf)	Energy (uW/MHz)
I	default	0.0100	Z(LH)	0.0010	2.4968
I	default	0.0100	Z(HL)	0.0010	4.4415

LEAKAGE POWER

When Condition	Power (nW)
!I	0.8429
I	0.8302

gf180mcu_fd_sc_mcu9t5v0__buf_3

gf180mcu_fd_sc_mcu9t5v0__buf_3 symbol

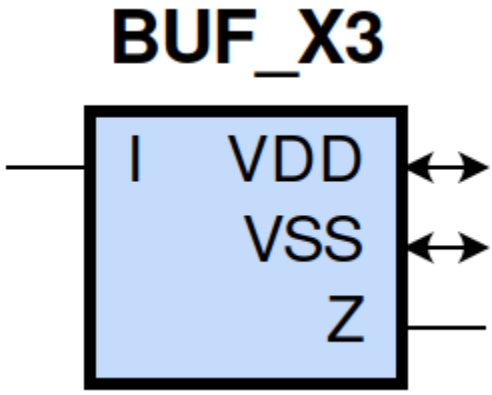

gf180mcu_fd_sc_mcu9t5v0__buf_3 schematic

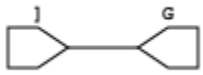

gf180mcu_fd_sc_mcu9t5v0__buf_3 layout

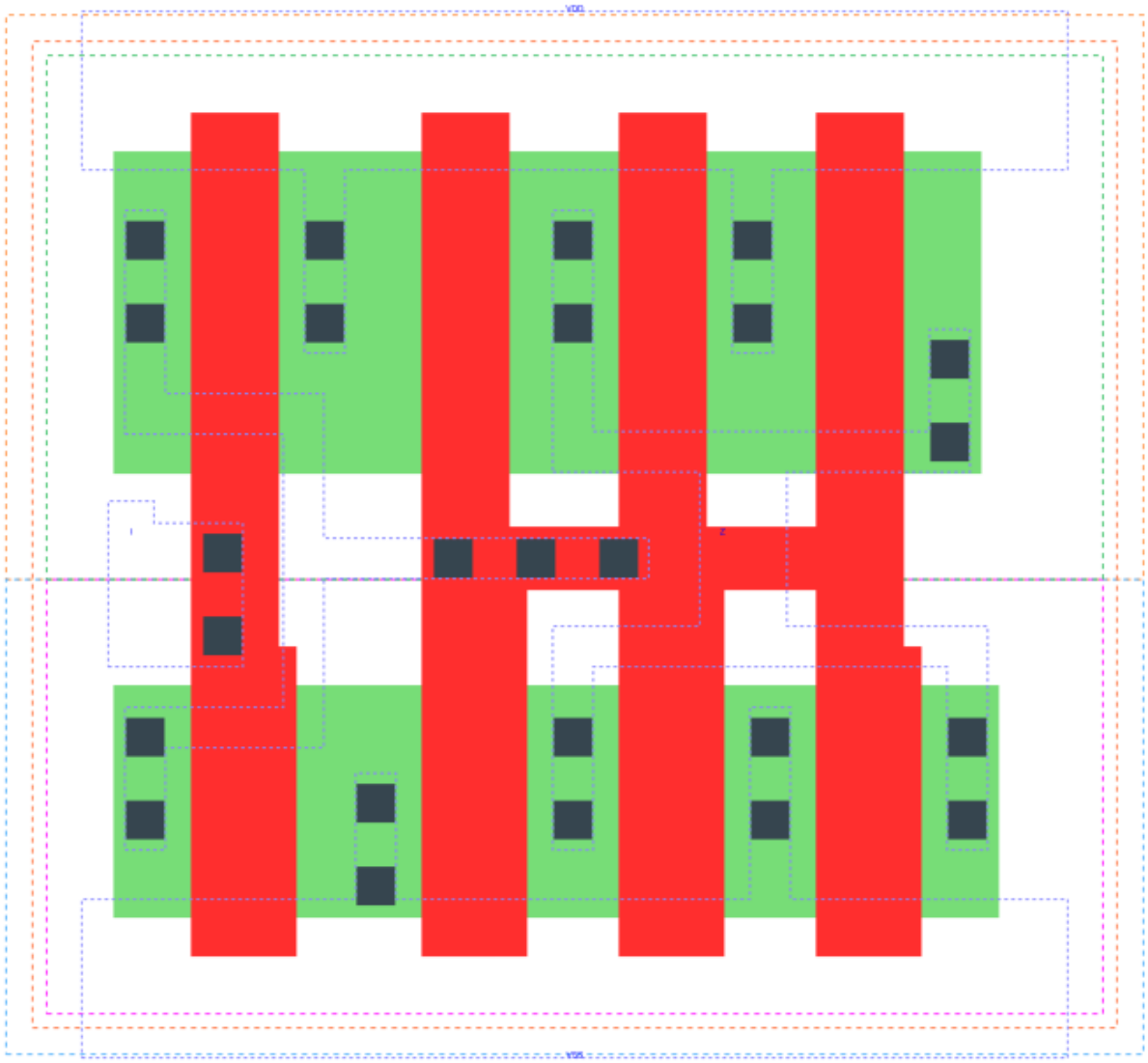

BUF_X3 is a buffer with 3X drive strength

Attributes

Attribute	Value
area	28.224000 μm^2

OUTPUT FUNCTIONS

Output Pin	Function
Z	I

TRUTH TABLE FOR Z

I	Z
1	1
0	0

FUNCTIONAL SCHEMATIC

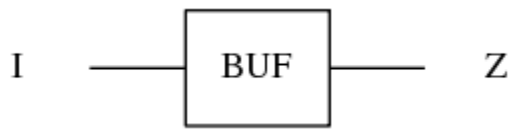

PIN CAPACITANCE (pf)

Pin	Type	Capacitance (pf)
I	input	0.0071

DELAY AND OUTPUT TRANSITION TIME corresponding to min slew and load

Input Pin	Output	When Condition	Tin (ns)	Out Load (pf)	Delay (ns)	Tout (ns)
I(LH)	Z(LH)	default	0.0100	0.0010	0.1511	0.0281
I(HL)	Z(HL)	default	0.0100	0.0010	0.1767	0.0319

DYNAMIC ENERGY

Input Pin	When Condition	Tin (ns)	Output	Out Load (pf)	Energy (uW/MHz)
I	default	0.0100	Z(LH)	0.0010	0.4220
I	default	0.0100	Z(HL)	0.0010	0.6833

LEAKAGE POWER

When Condition	Power (nW)
!I	0.1562
I	0.1536

gf180mcu_fd_sc_mcu9t5v0__buf_4

gf180mcu_fd_sc_mcu9t5v0__buf_4 symbol

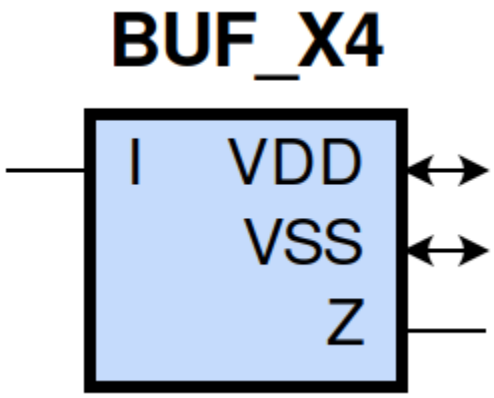

gf180mcu_fd_sc_mcu9t5v0__buf_4 schematic

gf180mcu_fd_sc_mcu9t5v0__buf_4 layout

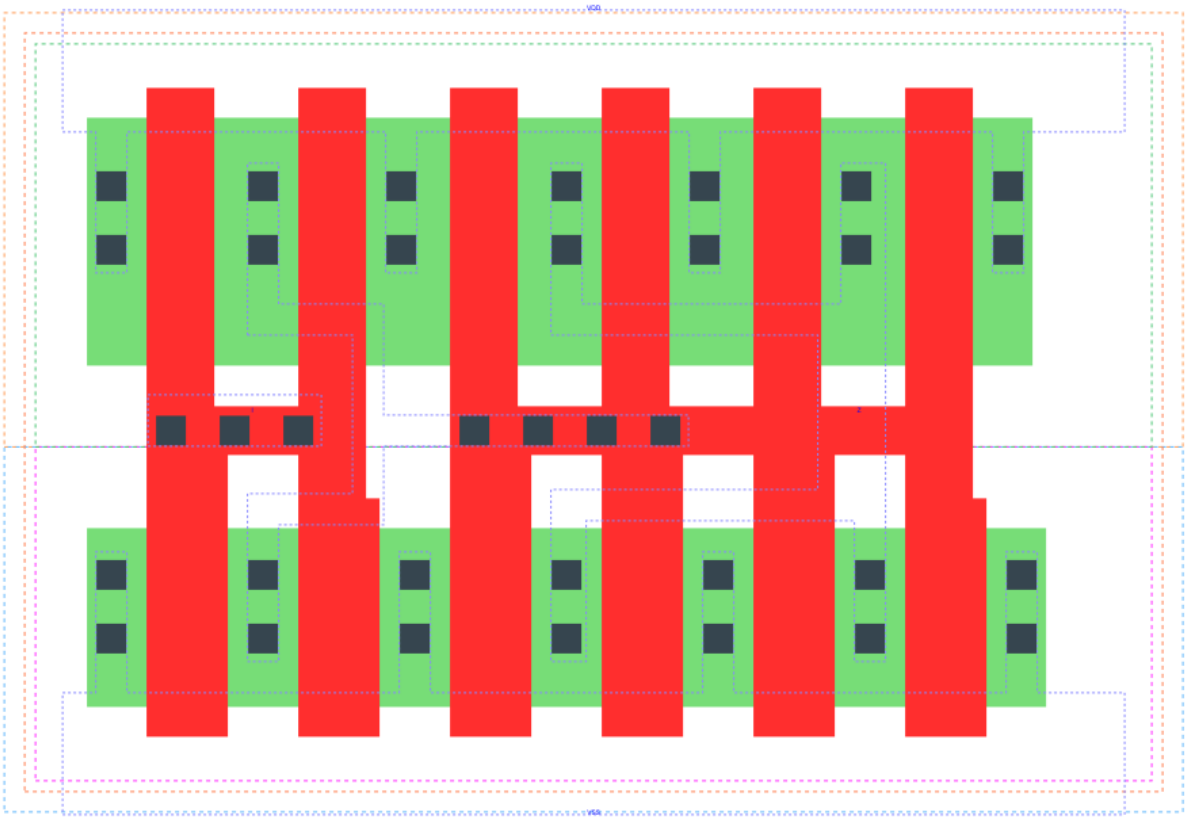

BUF_X4 is a buffer with 4X drive strength

Attributes

Attribute	Value
area	39.513600 μm^2

OUTPUT FUNCTIONS

Output Pin	Function
Z	I

TRUTH TABLE FOR Z

I	Z
1	1
0	0

FUNCTIONAL SCHEMATIC

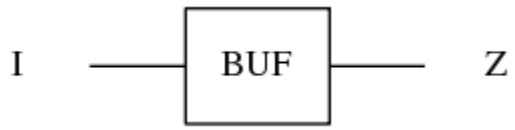

PIN CAPACITANCE (pf)

Pin	Type	Capacitance (pf)
I	input	0.0137

DELAY AND OUTPUT TRANSITION TIME corresponding to min slew and load

Input Pin	Output	When Condition	Tin (ns)	Out Load (pf)	Delay (ns)	Tout (ns)
I(LH)	Z(LH)	default	0.0100	0.0010	0.1123	0.0224
I(HL)	Z(HL)	default	0.0100	0.0010	0.1306	0.0230

DYNAMIC ENERGY

Input Pin	When Condition	Tin (ns)	Output	Out Load (pf)	Energy (uW/MHz)
I	default	0.0100	Z(LH)	0.0010	0.4749
I	default	0.0100	Z(HL)	0.0010	0.8569

LEAKAGE POWER

When Condition	Power (nW)
!I	0.2086
I	0.2060

gf180mcu_fd_sc_mcu9t5v0__buf_8

gf180mcu_fd_sc_mcu9t5v0__buf_8 symbol

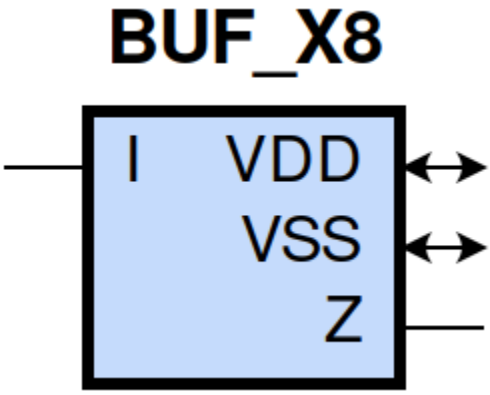

gf180mcu_fd_sc_mcu9t5v0__buf_8 schematic

gf180mcu_fd_sc_mcu9t5v0__buf_8 layout

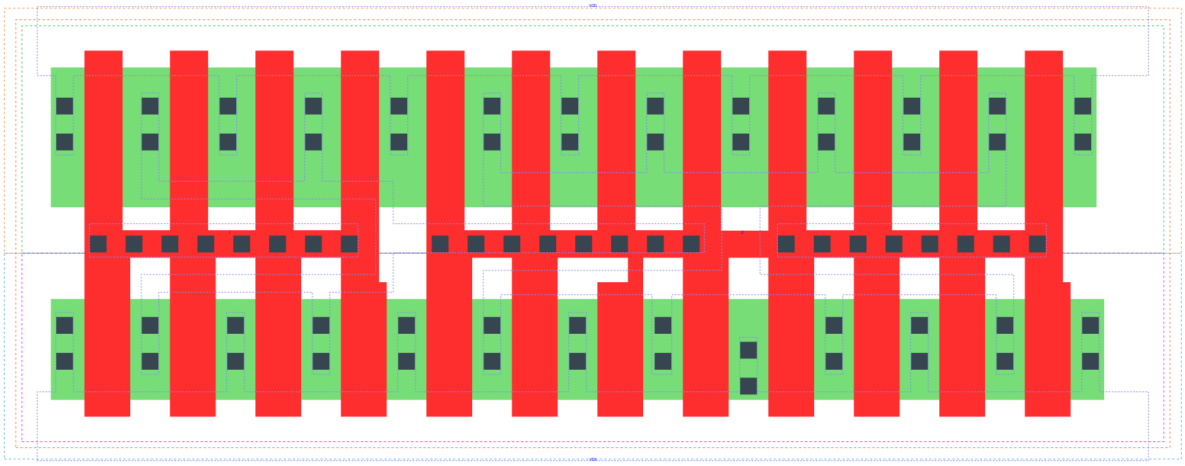

BUF_X8 is a buffer with 8X drive strength

Attributes

Attribute	Value
area	73.382400 μm^2

OUTPUT FUNCTIONS

Output Pin	Function
Z	I

TRUTH TABLE FOR Z

I	Z
1	1
0	0

FUNCTIONAL SCHEMATIC

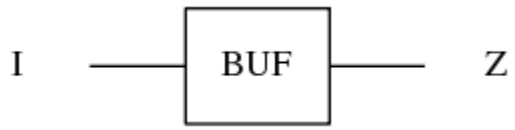

PIN CAPACITANCE (pf)

Pin	Type	Capacitance (pf)
I	input	0.0276

DELAY AND OUTPUT TRANSITION TIME corresponding to min slew and load

Input Pin	Output	When Condition	Tin (ns)	Out Load (pf)	Delay (ns)	Tout (ns)
I(LH)	Z(LH)	default	0.0100	0.0010	0.1152	0.0230
I(HL)	Z(HL)	default	0.0100	0.0010	0.1338	0.0236

DYNAMIC ENERGY

Input Pin	When Condition	Tin (ns)	Output	Out Load (pf)	Energy (uW/MHz)
I	default	0.0100	Z(LH)	0.0010	0.9898
I	default	0.0100	Z(HL)	0.0010	1.7651

LEAKAGE POWER

When Condition	Power (nW)
!I	0.3672
I	0.3621

gf180mcu_fd_sc_mcu9t5v0__bufz_1

gf180mcu_fd_sc_mcu9t5v0__bufz_1 symbol

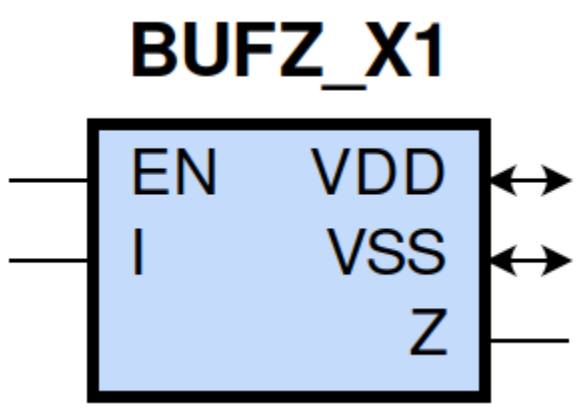

gf180mcu_fd_sc_mcu9t5v0__bufz_1 schematic

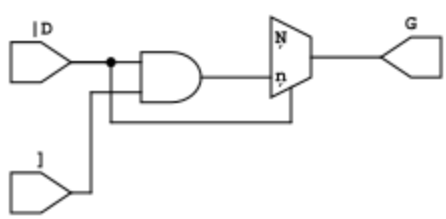

gf180mcu_fd_sc_mcu9t5v0__bufz_1 layout

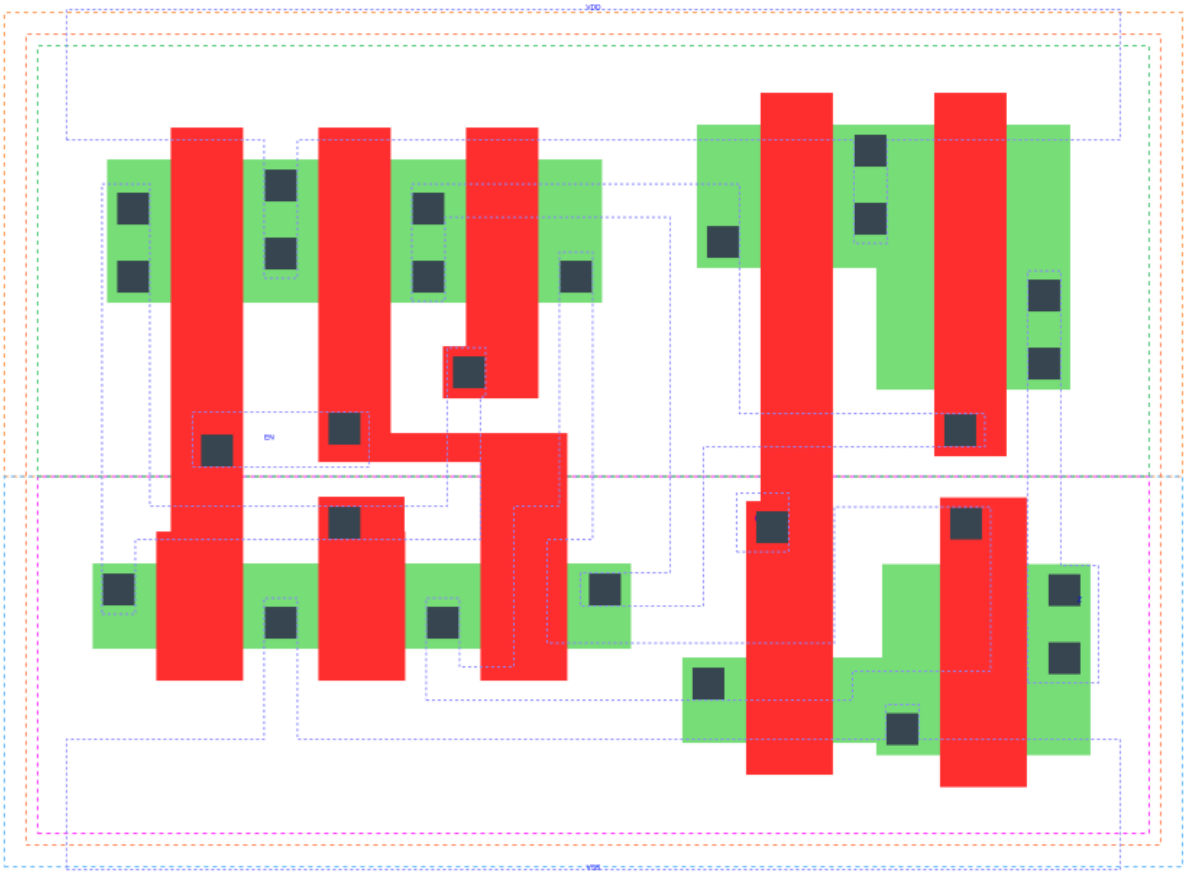

BUFZ_X1 is a tri-state buffer with 1X drive strength

Attributes

Attribute	Value
area	36.691200 μm^2

OUTPUT FUNCTIONS

Output Pin	Function
Z	I

TRUTH TABLE FOR Z

EN	I	Z
1	1	1
1	0	0
0	?	z

FUNCTIONAL SCHEMATIC

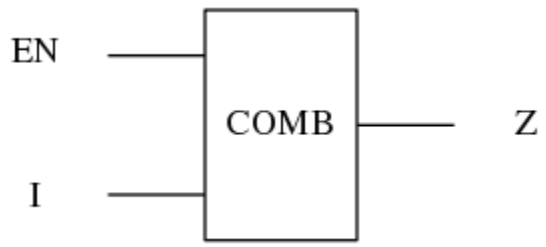

PIN CAPACITANCE (pf)

Pin	Type	Capacitance (pf)
EN	input	0.0080
I	input	0.0041

DELAY AND OUTPUT TRANSITION TIME corresponding to min slew and load

Input Pin	Output	When Condition	Tin (ns)	Out Load (pf)	Delay (ns)	Tout (ns)
EN(LH)	Z(ZL)	!I	0.0100	0.0010	0.1601	0.0420
EN(LH)	Z(ZH)	I	0.0100	0.0010	0.1364	0.0413
EN(HL)	Z(LZ)	!I	0.0100		0.2070	0.0000
EN(HL)	Z(HZ)	I	0.0100		0.1270	0.0000
I(HL)	Z(HL)	EN	0.0100	0.0010	0.2486	0.0460
I(LH)	Z(LH)	EN	0.0100	0.0010	0.2443	0.0438

DYNAMIC ENERGY

Input Pin	When Condition	Tin (ns)	Output	Out Load (pf)	Energy (uW/MHz)
I	EN	0.0100	Z(HL)	0.0010	0.4105
I	EN	0.0100	Z(LH)	0.0010	0.1834
EN(HL)	!I	0.0100	n/a	n/a	0.2138
EN(HL)	I	0.0100	n/a	n/a	0.2831
I(LH)	!EN	0.0100	n/a	n/a	-0.0316
EN	I	0.0100	Z(LH)	0.0010	0.1463
I(HL)	!EN	0.0100	n/a	n/a	0.0318
EN	!I	0.0100	Z(HL)	0.0010	0.2617

LEAKAGE POWER

When Condition	Power (nW)
!EN&!I	0.1387
!EN&I	0.1387
EN&!I	0.2042
EN&I	0.2046

gf180mcu_fd_sc_mcu9t5v0__bufz_x12

gf180mcu_fd_sc_mcu9t5v0__bufz_x12 symbol

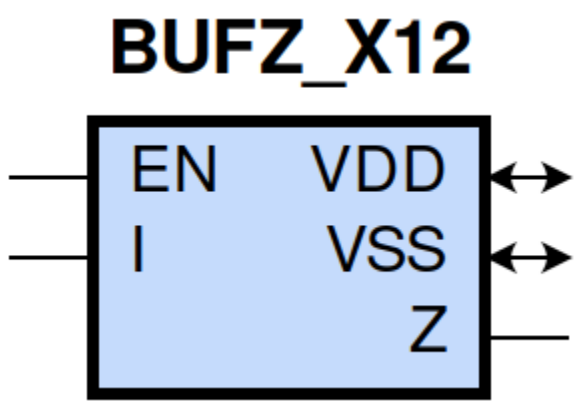

gf180mcu_fd_sc_mcu9t5v0__bufz_x12 schematic

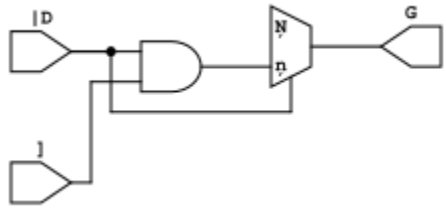

gf180mcu_fd_sc_mcu9t5v0__bufz_x12 layout

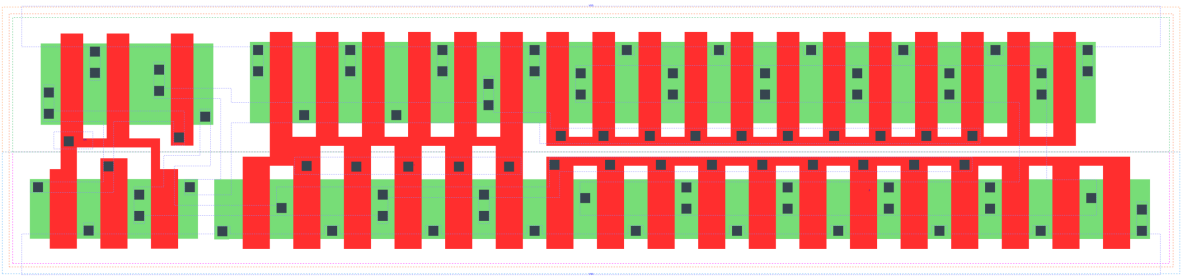

BUFZ_X12 is a tri-state buffer with 12X drive strength

Attributes

Attribute	Value
area	127.008000 μm^2

OUTPUT FUNCTIONS

Output Pin	Function
Z	I

TRUTH TABLE FOR Z

EN	I	Z
1	1	1
1	0	0
0	?	z

FUNCTIONAL SCHEMATIC

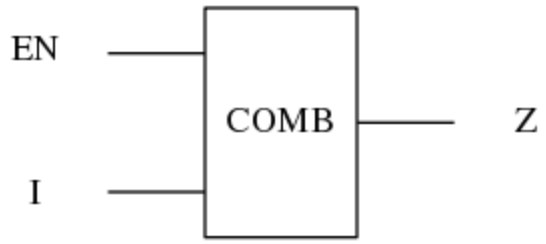

PIN CAPACITANCE (pf)

Pin	Type	Capacitance (pf)
EN	input	0.0136
I	input	0.0402

DELAY AND OUTPUT TRANSITION TIME corresponding to min slew and load

Input Pin	Output	When Condition	Tin (ns)	Out Load (pf)	Delay (ns)	Tout (ns)
EN(LH)	Z(ZL)	!I	0.0100	0.0010	0.1655	0.0402
EN(LH)	Z(ZH)	I	0.0100	0.0010	0.1891	0.0467
EN(HL)	Z(LZ)	!I	0.0100		0.3470	0.0000
EN(HL)	Z(HZ)	I	0.0100		0.4040	0.0000
I(HL)	Z(HL)	EN	0.0100	0.0010	0.2117	0.0383
I(LH)	Z(LH)	EN	0.0100	0.0010	0.2363	0.0438

DYNAMIC ENERGY

Input Pin	When Condition	Tin (ns)	Output	Out Load (pf)	Energy (uW/MHz)
I	EN	0.0100	Z(HL)	0.0010	2.4587
I	EN	0.0100	Z(LH)	0.0010	1.3190
EN(HL)	!I	0.0100	n/a	n/a	0.3662
EN(HL)	I	0.0100	n/a	n/a	0.7006
I(LH)	!EN	0.0100	n/a	n/a	-0.3499
EN	I	0.0100	Z(LH)	0.0010	1.4014
I(HL)	!EN	0.0100	n/a	n/a	0.3524
EN	!I	0.0100	Z(HL)	0.0010	1.5291

LEAKAGE POWER

When Condition	Power (nW)
!EN&!I	0.2848
!EN&I	0.2848
EN&!I	0.6280
EN&I	0.6217

gf180mcu_fd_sc_mcu9t5v0__bufz_x16

gf180mcu_fd_sc_mcu9t5v0__bufz_x16 symbol

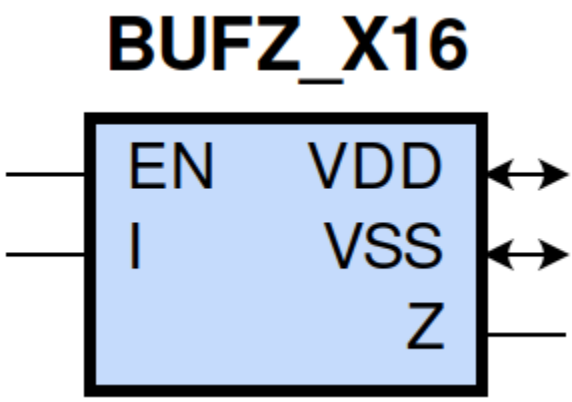

gf180mcu_fd_sc_mcu9t5v0__bufz_x16 schematic

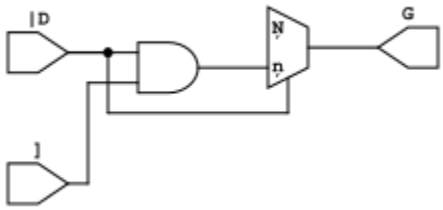

gf180mcu_fd_sc_mcu9t5v0__bufz_x16 layout

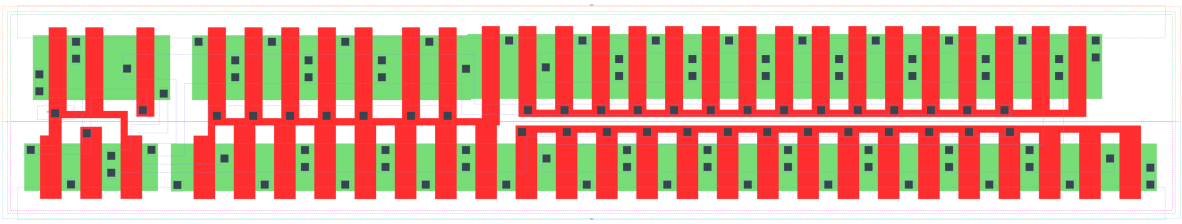

BUFZ_X16 is a tri-state buffer with 16X drive strength

Attributes

Attribute	Value
area	160.876800 μm^2

OUTPUT FUNCTIONS

Output Pin	Function
Z	I

TRUTH TABLE FOR Z

EN	I	Z
1	1	1
1	0	0
0	?	z

FUNCTIONAL SCHEMATIC

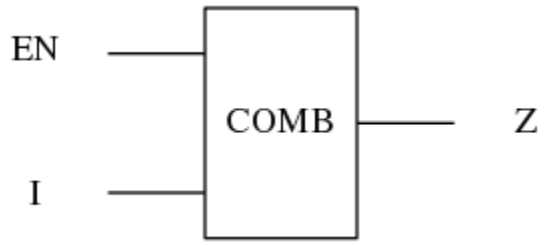

PIN CAPACITANCE (pf)

Pin	Type	Capacitance (pf)
EN	input	0.0137
I	input	0.0530

DELAY AND OUTPUT TRANSITION TIME corresponding to min slew and load

Input Pin	Output	When Condition	Tin (ns)	Out Load (pf)	Delay (ns)	Tout (ns)
EN(LH)	Z(ZL)	!I	0.0100	0.0010	0.1849	0.0457
EN(LH)	Z(ZH)	I	0.0100	0.0010	0.2211	0.0542
EN(HL)	Z(LZ)	!I	0.0100		0.4170	0.0000
EN(HL)	Z(HZ)	I	0.0100		0.5300	0.0000
I(HL)	Z(HL)	EN	0.0100	0.0010	0.2362	0.0430
I(LH)	Z(LH)	EN	0.0100	0.0010	0.2754	0.0509

DYNAMIC ENERGY

Input Pin	When Condition	Tin (ns)	Output	Out Load (pf)	Energy (uW/MHz)
I	EN	0.0100	Z(HL)	0.0010	3.2105
I	EN	0.0100	Z(LH)	0.0010	1.7621
EN(HL)	!I	0.0100	n/a	n/a	0.3683
EN(HL)	I	0.0100	n/a	n/a	0.8109
I(LH)	!EN	0.0100	n/a	n/a	-0.4670
EN	I	0.0100	Z(LH)	0.0010	1.8856
I(HL)	!EN	0.0100	n/a	n/a	0.4690
EN	!I	0.0100	Z(HL)	0.0010	1.9994

LEAKAGE POWER

When Condition	Power (nW)
!EN&!I	0.3373
!EN&I	0.3373
EN&!I	0.7865
EN&I	0.7777

gf180mcu_fd_sc_mcu9t5v0__bufz_2

gf180mcu_fd_sc_mcu9t5v0__bufz_2 symbol

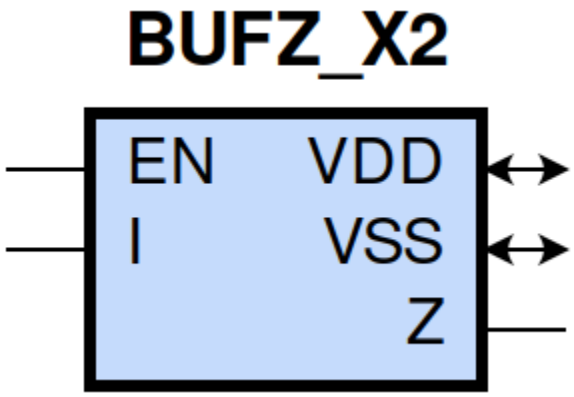

gf180mcu_fd_sc_mcu9t5v0__bufz_2 schematic

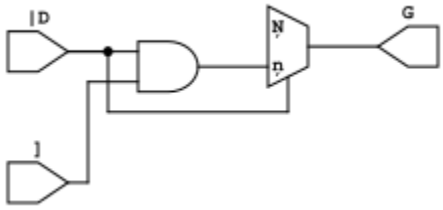

gf180mcu_fd_sc_mcu9t5v0__bufz_2 layout

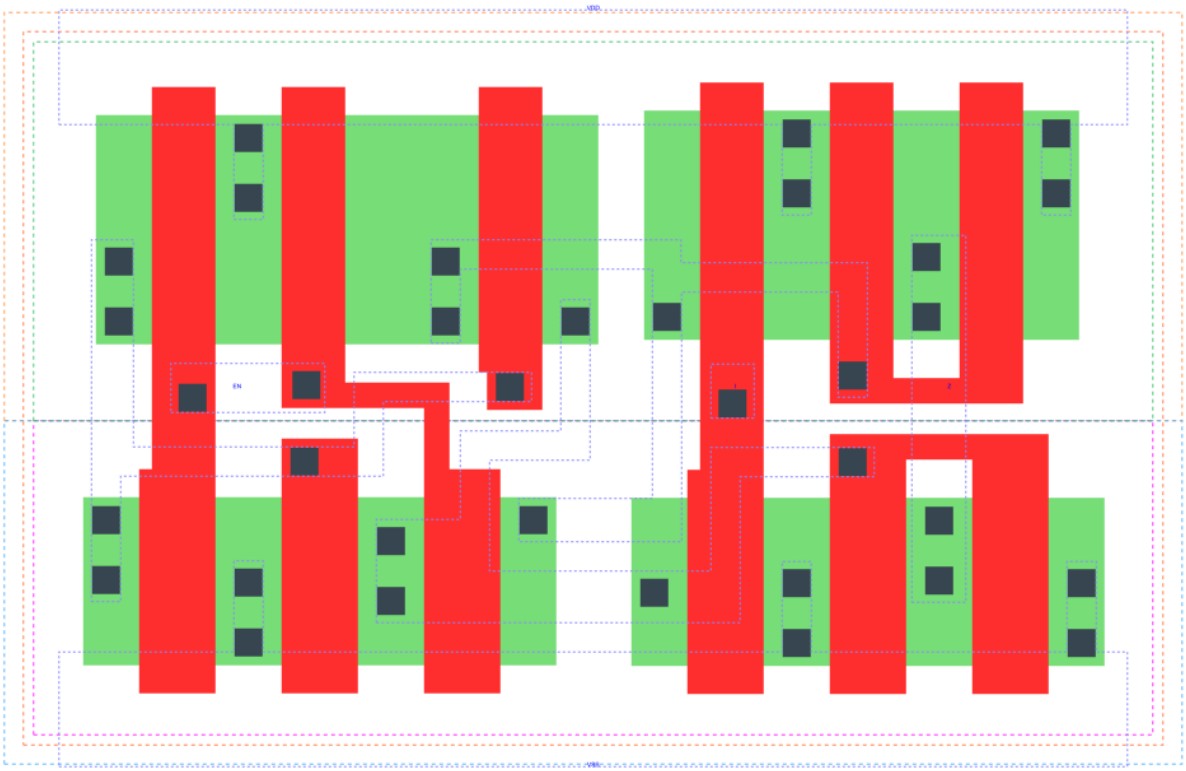

BUFZ_X2 is a tri-state buffer with 2X drive strength

Attributes

Attribute	Value
area	42.336000 μm^2

OUTPUT FUNCTIONS

Output Pin	Function
Z	I

TRUTH TABLE FOR Z

EN	I	Z
1	1	1
1	0	0
0	?	z

FUNCTIONAL SCHEMATIC

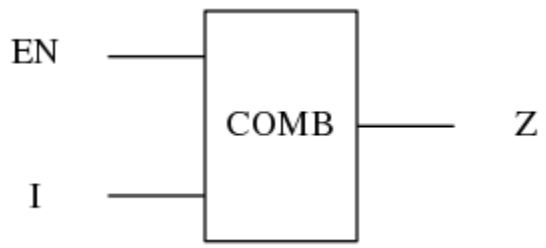

PIN CAPACITANCE (pf)

Pin	Type	Capacitance (pf)
EN	input	0.0137
I	input	0.0068

DELAY AND OUTPUT TRANSITION TIME corresponding to min slew and load

Input Pin	Output	When Condition	Tin (ns)	Out Load (pf)	Delay (ns)	Tout (ns)
EN(LH)	Z(ZL)	!I	0.0100	0.0010	0.1262	0.0318
EN(LH)	Z(ZH)	I	0.0100	0.0010	0.1068	0.0295
EN(HL)	Z(LZ)	!I	0.0100		0.1790	0.0000
EN(HL)	Z(HZ)	I	0.0100		0.1240	0.0000
I(HL)	Z(HL)	EN	0.0100	0.0010	0.2242	0.0368
I(LH)	Z(LH)	EN	0.0100	0.0010	0.1974	0.0314

DYNAMIC ENERGY

Input Pin	When Condition	Tin (ns)	Output	Out Load (pf)	Energy (uW/MHz)
I	EN	0.0100	Z(HL)	0.0010	0.7164
I	EN	0.0100	Z(LH)	0.0010	0.3225
EN(HL)	!I	0.0100	n/a	n/a	0.3658
EN(HL)	I	0.0100	n/a	n/a	0.4635
I(LH)	!EN	0.0100	n/a	n/a	-0.0583
EN	I	0.0100	Z(LH)	0.0010	0.2582
I(HL)	!EN	0.0100	n/a	n/a	0.0585
EN	!I	0.0100	Z(HL)	0.0010	0.4467

LEAKAGE POWER

When Condition	Power (nW)
!EN&!I	0.1542
!EN&I	0.1542
EN&!I	0.2317
EN&I	0.2317

gf180mcu_fd_sc_mcu9t5v0__bufz_3

gf180mcu_fd_sc_mcu9t5v0__bufz_3 symbol

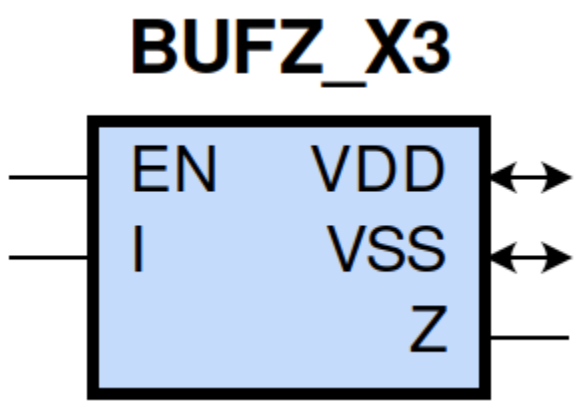

gf180mcu_fd_sc_mcu9t5v0__bufz_3 schematic

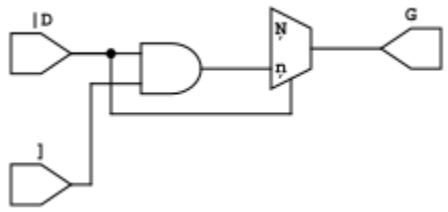

gf180mcu_fd_sc_mcu9t5v0__bufz_3 layout

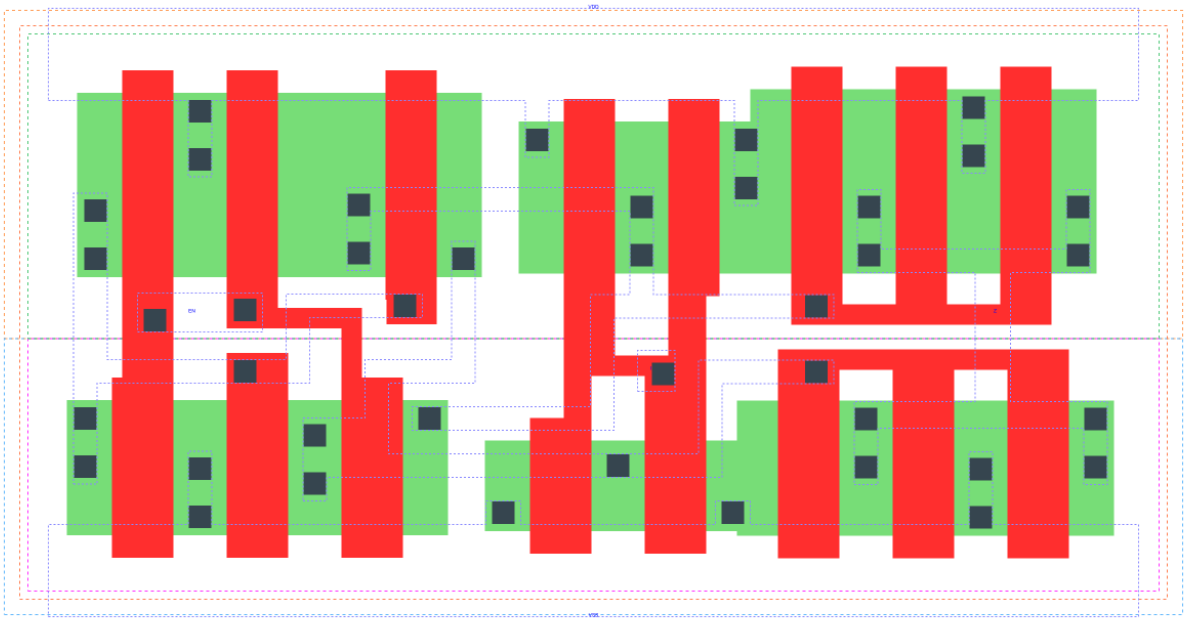

BUFZ_X3 is a tri-state buffer with 3X drive strength

Attributes

Attribute	Value
area	53.625600 μm^2

OUTPUT FUNCTIONS

Output Pin	Function
Z	I

TRUTH TABLE FOR Z

EN	I	Z
1	1	1
1	0	0
0	?	z

FUNCTIONAL SCHEMATIC

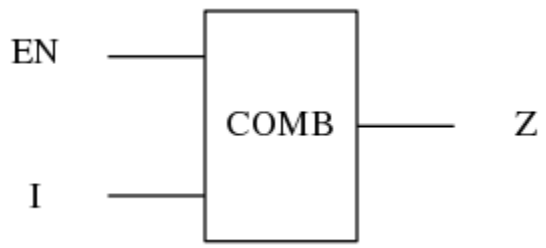

PIN CAPACITANCE (pf)

Pin	Type	Capacitance (pf)
EN	input	0.0137
I	input	0.0105

DELAY AND OUTPUT TRANSITION TIME corresponding to min slew and load

Input Pin	Output	When Condition	Tin (ns)	Out Load (pf)	Delay (ns)	Tout (ns)
EN(LH)	Z(ZL)	!I	0.0100	0.0010	0.1256	0.0303
EN(LH)	Z(ZH)	I	0.0100	0.0010	0.1192	0.0325
EN(HL)	Z(LZ)	!I	0.0100		0.1920	0.0000
EN(HL)	Z(HZ)	I	0.0100		0.1500	0.0000
I(HL)	Z(HL)	EN	0.0100	0.0010	0.1874	0.0325
I(LH)	Z(LH)	EN	0.0100	0.0010	0.1906	0.0329

DYNAMIC ENERGY

Input Pin	When Condition	Tin (ns)	Output	Out Load (pf)	Energy (uW/MHz)
I	EN	0.0100	Z(HL)	0.0010	0.8805
I	EN	0.0100	Z(LH)	0.0010	0.4072
EN(HL)	!I	0.0100	n/a	n/a	0.3658
EN(HL)	I	0.0100	n/a	n/a	0.4936
I(LH)	!EN	0.0100	n/a	n/a	-0.0958
EN	I	0.0100	Z(LH)	0.0010	0.3716
I(HL)	!EN	0.0100	n/a	n/a	0.0962
EN	!I	0.0100	Z(HL)	0.0010	0.5283

LEAKAGE POWER

When Condition	Power (nW)
!EN&!I	0.1680
!EN&I	0.1680
EN&!I	0.2839
EN&I	0.2837

gf180mcu_fd_sc_mcu9t5v0__bufz_4

gf180mcu_fd_sc_mcu9t5v0__bufz_4 symbol

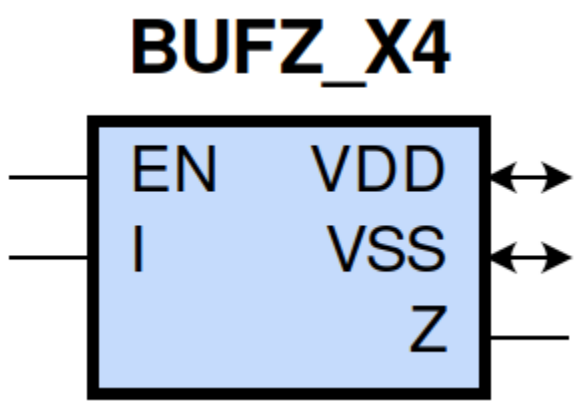

gf180mcu_fd_sc_mcu9t5v0__bufz_4 schematic

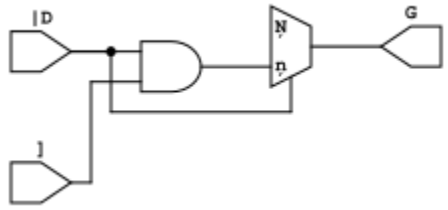

gf180mcu_fd_sc_mcu9t5v0__bufz_4 layout

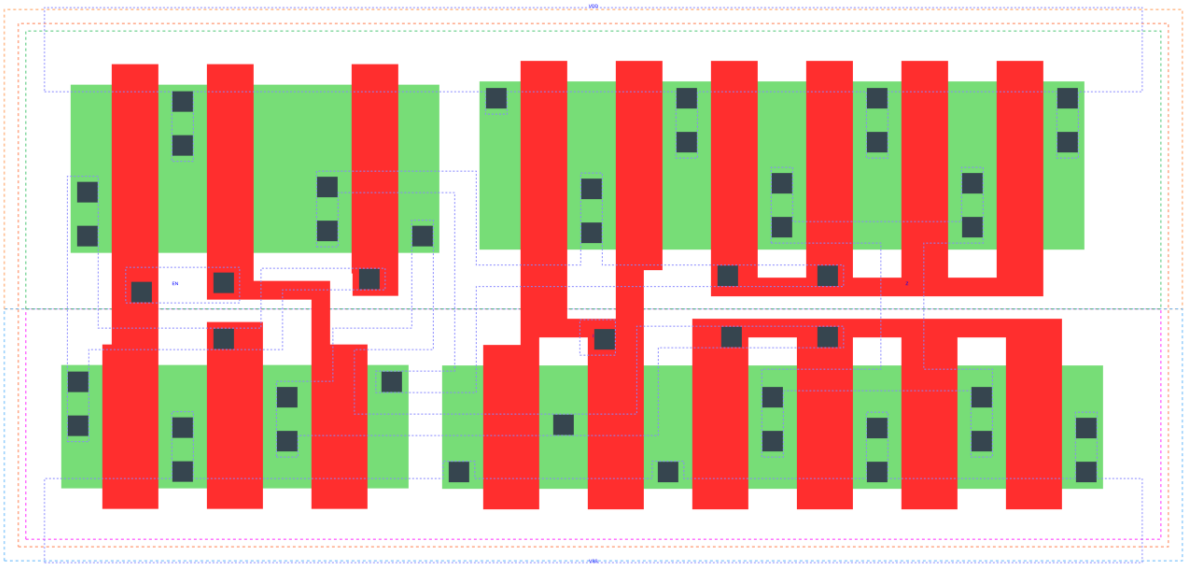

BUFZ_X4 is a tri-state buffer with 4X drive strength

Attributes

Attribute	Value
area	59.270400 μm^2

OUTPUT FUNCTIONS

Output Pin	Function
Z	I

TRUTH TABLE FOR Z

EN	I	Z
1	1	1
1	0	0
0	?	z

FUNCTIONAL SCHEMATIC

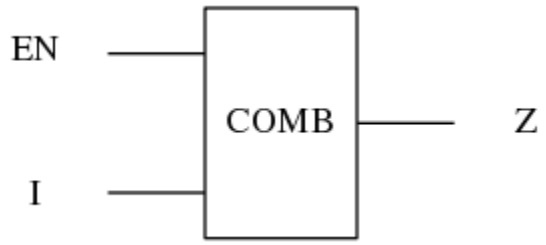

PIN CAPACITANCE (pf)

Pin	Type	Capacitance (pf)
EN	input	0.0137
I	input	0.0133

DELAY AND OUTPUT TRANSITION TIME corresponding to min slew and load

Input Pin	Output	When Condition	Tin (ns)	Out Load (pf)	Delay (ns)	Tout (ns)
EN(LH)	Z(ZL)	!I	0.0100	0.0010	0.1257	0.0294
EN(LH)	Z(ZH)	I	0.0100	0.0010	0.1222	0.0311
EN(HL)	Z(LZ)	!I	0.0100		0.2100	0.0000
EN(HL)	Z(HZ)	I	0.0100		0.1760	0.0000
I(HL)	Z(HL)	EN	0.0100	0.0010	0.1865	0.0308
I(LH)	Z(LH)	EN	0.0100	0.0010	0.1736	0.0311

DYNAMIC ENERGY

Input Pin	When Condition	Tin (ns)	Output	Out Load (pf)	Energy (uW/MHz)
I	EN	0.0100	Z(HL)	0.0010	1.0522
I	EN	0.0100	Z(LH)	0.0010	0.4796
EN(HL)	!I	0.0100	n/a	n/a	0.3657
EN(HL)	I	0.0100	n/a	n/a	0.5140
I(LH)	!EN	0.0100	n/a	n/a	-0.1167
EN	I	0.0100	Z(LH)	0.0010	0.4647
I(HL)	!EN	0.0100	n/a	n/a	0.1174
EN	!I	0.0100	Z(HL)	0.0010	0.6231

LEAKAGE POWER

When Condition	Power (nW)
!EN&!I	0.1807
!EN&I	0.1807
EN&!I	0.3109
EN&I	0.3097

gf180mcu_fd_sc_mcu9t5v0__bufz_8

gf180mcu_fd_sc_mcu9t5v0__bufz_8 symbol

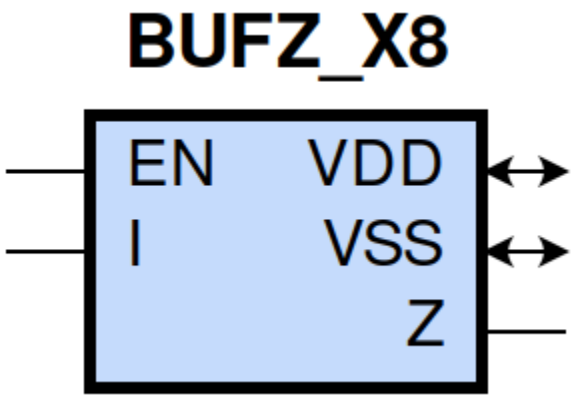

gf180mcu_fd_sc_mcu9t5v0__bufz_8 schematic

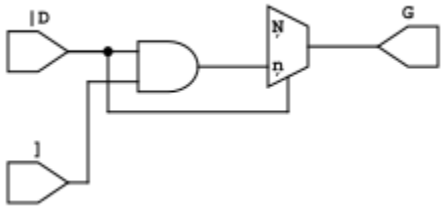

gf180mcu_fd_sc_mcu9t5v0__bufz_8 layout

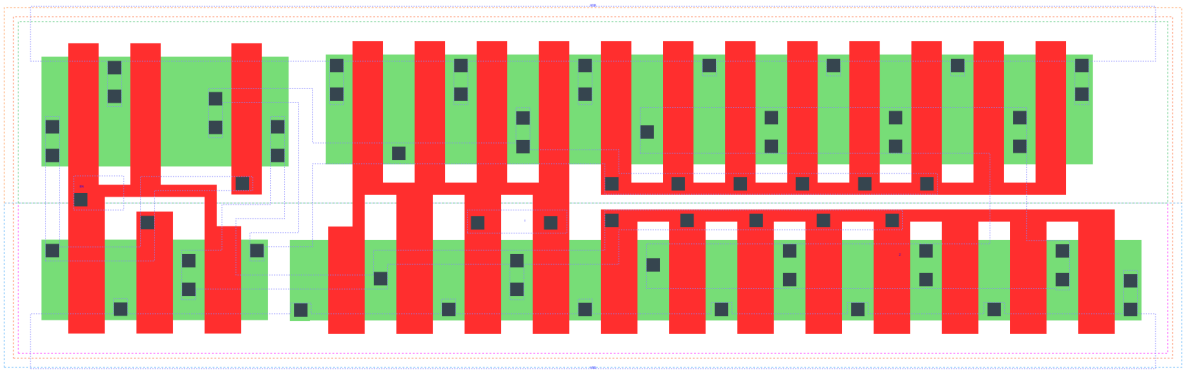

BUFZ_X8 is a tri-state buffer with 8X drive strength

Attributes

Attribute	Value
area	93.139200 μm^2

OUTPUT FUNCTIONS

Output Pin	Function
Z	I

TRUTH TABLE FOR Z

EN	I	Z
1	1	1
1	0	0
0	?	z

FUNCTIONAL SCHEMATIC

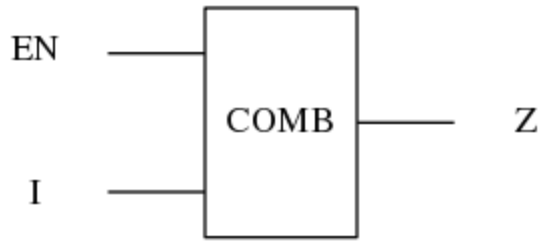

PIN CAPACITANCE (pf)

Pin	Type	Capacitance (pf)
EN	input	0.0136
I	input	0.0266

DELAY AND OUTPUT TRANSITION TIME corresponding to min slew and load

Input Pin	Output	When Condition	Tin (ns)	Out Load (pf)	Delay (ns)	Tout (ns)
EN(LH)	Z(ZL)	!I	0.0100	0.0010	0.1454	0.0345
EN(LH)	Z(ZH)	I	0.0100	0.0010	0.1590	0.0394
EN(HL)	Z(LZ)	!I	0.0100		0.2780	0.0000
EN(HL)	Z(HZ)	I	0.0100		0.2920	0.0000
I(HL)	Z(HL)	EN	0.0100	0.0010	0.1923	0.0332
I(LH)	Z(LH)	EN	0.0100	0.0010	0.2027	0.0374

DYNAMIC ENERGY

Input Pin	When Condition	Tin (ns)	Output	Out Load (pf)	Energy (uW/MHz)
I	EN	0.0100	Z(HL)	0.0010	1.7537
I	EN	0.0100	Z(LH)	0.0010	0.9000
EN(HL)	!I	0.0100	n/a	n/a	0.3634
EN(HL)	I	0.0100	n/a	n/a	0.6091
I(LH)	!EN	0.0100	n/a	n/a	-0.2337
EN	I	0.0100	Z(LH)	0.0010	0.9379
I(HL)	!EN	0.0100	n/a	n/a	0.2347
EN	!I	0.0100	Z(HL)	0.0010	1.0694

LEAKAGE POWER

When Condition	Power (nW)
!EN&!I	0.2326
!EN&I	0.2326
EN&!I	0.4695
EN&I	0.4657

gf180mcu_fd_sc_mcu9t5v0__clkbuf_1

gf180mcu_fd_sc_mcu9t5v0__clkbuf_1 symbol

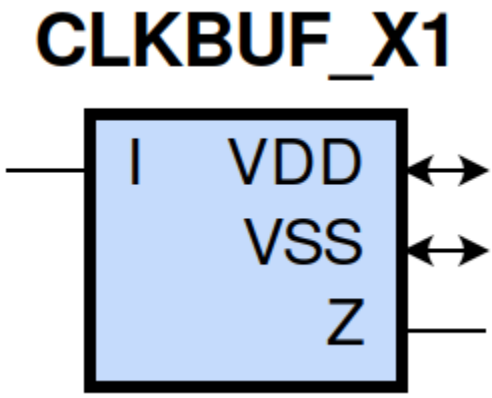

gf180mcu_fd_sc_mcu9t5v0__clkbuf_1 schematic

gf180mcu_fd_sc_mcu9t5v0__clkbuf_1 layout

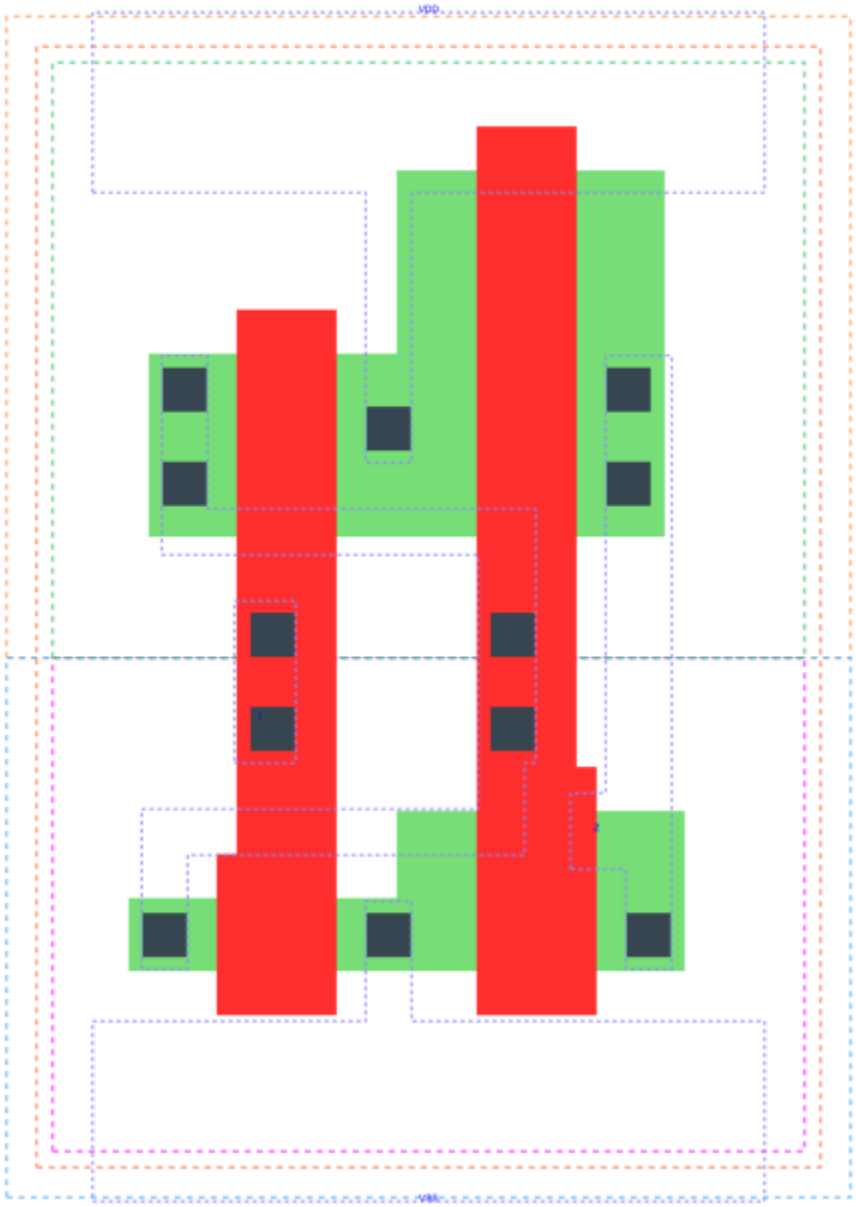

CLKBUF_X1 is a clock buffer with 1X drive strength

Attributes

Attribute	Value
area	16.934400 μm^2

OUTPUT FUNCTIONS

Output Pin	Function
Z	I

TRUTH TABLE FOR Z

I	Z
1	1
0	0

FUNCTIONAL SCHEMATIC

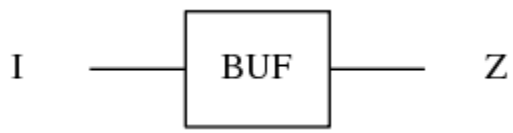

PIN CAPACITANCE (pf)

Pin	Type	Capacitance (pf)
I	input	0.0033

DELAY AND OUTPUT TRANSITION TIME corresponding to min slew and load

Input Pin	Output	When Condition	Tin (ns)	Out Load (pf)	Delay (ns)	Tout (ns)
I(LH)	Z(LH)	default	0.0100	0.0010	0.1611	0.0354
I(HL)	Z(HL)	default	0.0100	0.0010	0.1630	0.0349

DYNAMIC ENERGY

Input Pin	When Condition	Tin (ns)	Output	Out Load (pf)	Energy (uW/MHz)
I	default	0.0100	Z(LH)	0.0010	0.1317
I	default	0.0100	Z(HL)	0.0010	0.2033

LEAKAGE POWER

When Condition	Power (nW)
!I	0.1042
I	0.1018

gf180mcu_fd_sc_mcu9t5v0__clkbuf_x12

gf180mcu_fd_sc_mcu9t5v0__clkbuf_x12 symbol

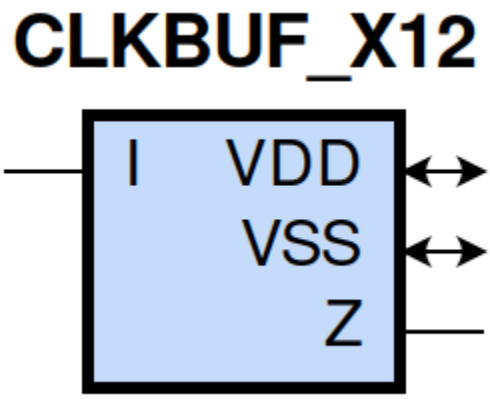

gf180mcu_fd_sc_mcu9t5v0__clkbuf_x12 schematic

gf180mcu_fd_sc_mcu9t5v0__clkbuf_x12 layout

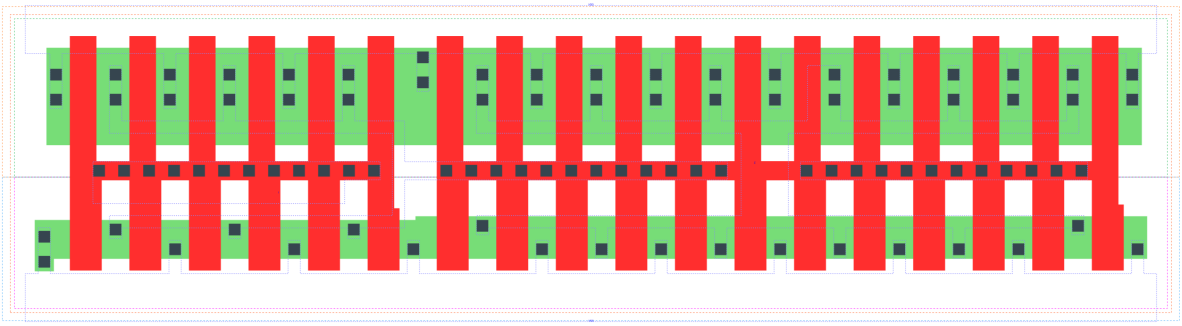

CLKBUF_X12 is a clock buffer with 12X drive strength

Attributes

Attribute	Value
area	107.251200 μm^2

OUTPUT FUNCTIONS

Output Pin	Function
Z	I

TRUTH TABLE FOR Z

I	Z
1	1
0	0

FUNCTIONAL SCHEMATIC

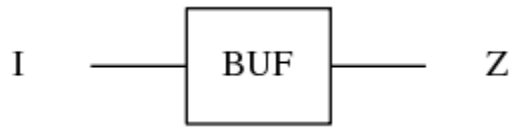

PIN CAPACITANCE (pf)

Pin	Type	Capacitance (pf)
I	input	0.0334

DELAY AND OUTPUT TRANSITION TIME corresponding to min slew and load

Input Pin	Output	When Condition	Tin (ns)	Out Load (pf)	Delay (ns)	Tout (ns)
I(LH)	Z(LH)	default	0.0100	0.0010	0.1393	0.0253
I(HL)	Z(HL)	default	0.0100	0.0010	0.1291	0.0231

DYNAMIC ENERGY

Input Pin	When Condition	Tin (ns)	Output	Out Load (pf)	Energy (uW/MHz)
I	default	0.0100	Z(LH)	0.0010	1.3690
I	default	0.0100	Z(HL)	0.0010	2.0390

LEAKAGE POWER

When Condition	Power (nW)
!I	0.5249
I	0.5165

gf180mcu_fd_sc_mcu9t5v0__clkbuf_x16

gf180mcu_fd_sc_mcu9t5v0__clkbuf_x16 symbol

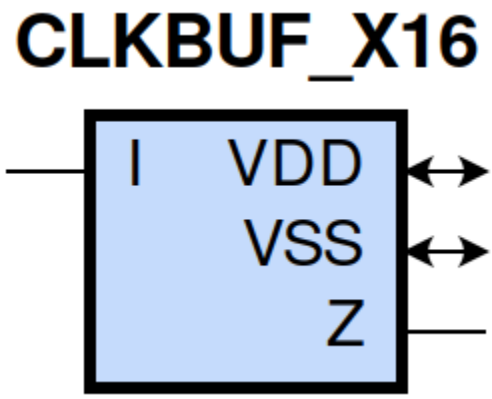

gf180mcu_fd_sc_mcu9t5v0__clkbuf_x16 schematic

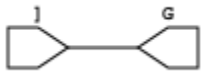

gf180mcu_fd_sc_mcu9t5v0__clkbuf_x16 layout

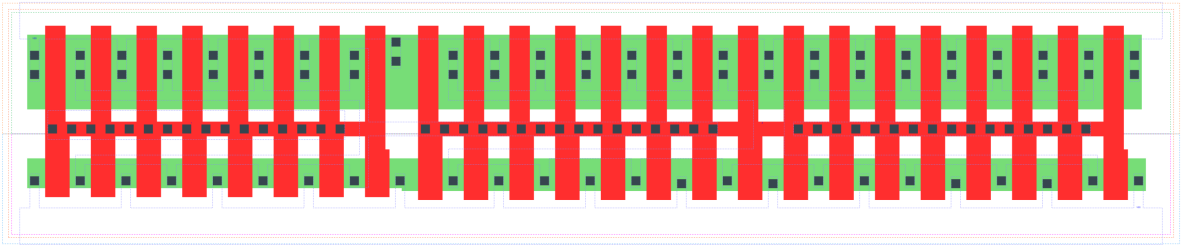

CLKBUF_X16 is a clock buffer with 16X drive strength

Attributes

Attribute	Value
area	141.120000 μm^2

OUTPUT FUNCTIONS

Output Pin	Function
Z	I

TRUTH TABLE FOR Z

I	Z
1	1
0	0

FUNCTIONAL SCHEMATIC

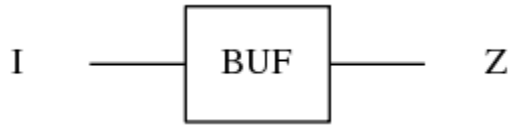

PIN CAPACITANCE (pf)

Pin	Type	Capacitance (pf)
I	input	0.0444

DELAY AND OUTPUT TRANSITION TIME corresponding to min slew and load

Input Pin	Output	When Condition	Tin (ns)	Out Load (pf)	Delay (ns)	Tout (ns)
I(LH)	Z(LH)	default	0.0100	0.0010	0.1395	0.0252
I(HL)	Z(HL)	default	0.0100	0.0010	0.1293	0.0231

DYNAMIC ENERGY

Input Pin	When Condition	Tin (ns)	Output	Out Load (pf)	Energy (uW/MHz)
I	default	0.0100	Z(LH)	0.0010	1.8317
I	default	0.0100	Z(HL)	0.0010	2.7241

LEAKAGE POWER

When Condition	Power (nW)
!I	0.6832
I	0.6720

gf180mcu_fd_sc_mcu9t5v0__clkbuf_2

gf180mcu_fd_sc_mcu9t5v0__clkbuf_2 symbol

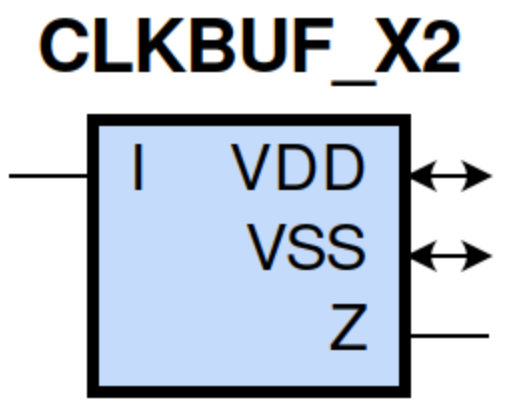

gf180mcu_fd_sc_mcu9t5v0__clkbuf_2 schematic

gf180mcu_fd_sc_mcu9t5v0__clkbuf_2 layout

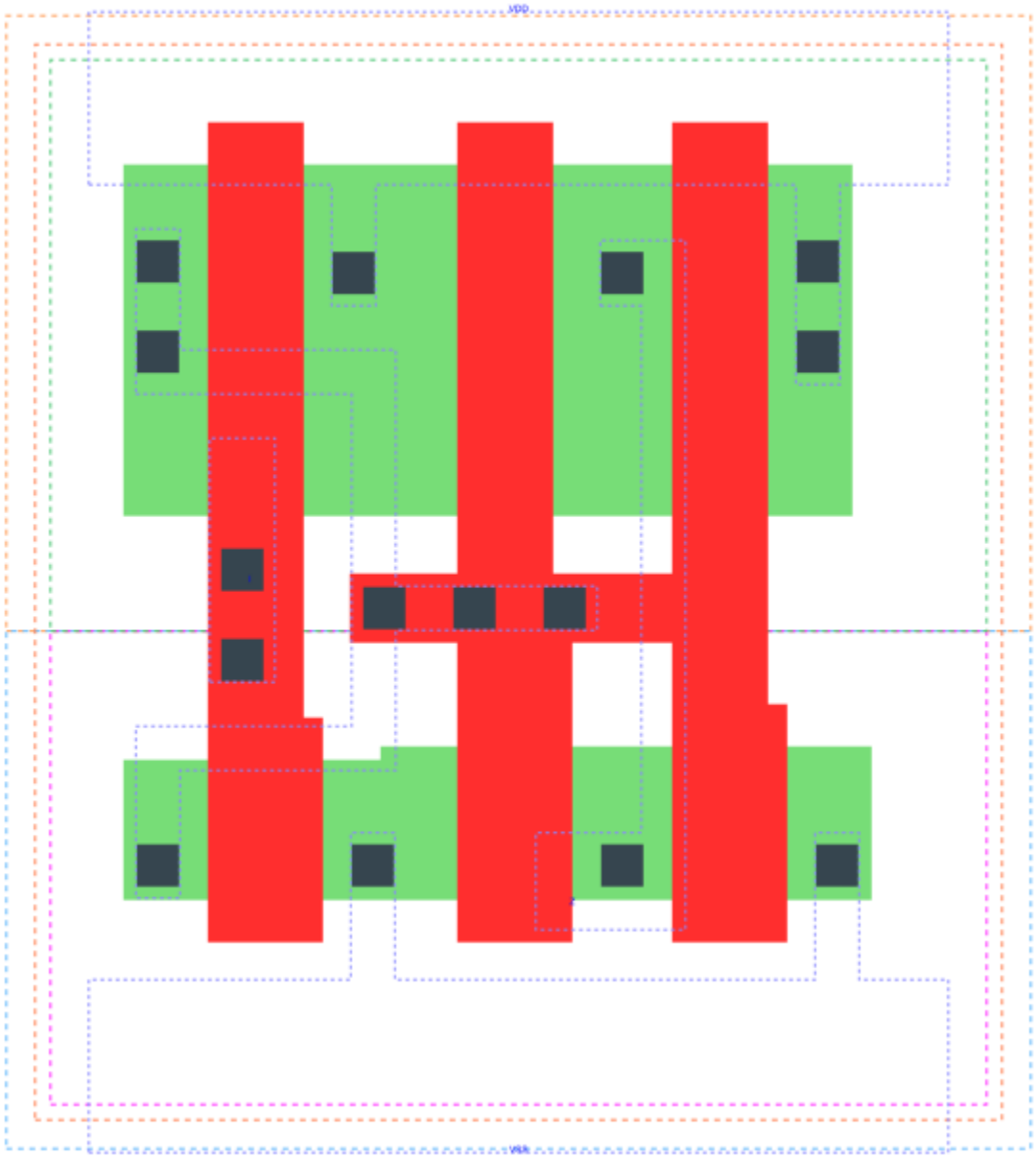

CLKBUF_X2 is a clock buffer with 2X drive strength

Attributes

Attribute	Value
area	22.579200 μm^2

OUTPUT FUNCTIONS

Output Pin	Function
Z	I

TRUTH TABLE FOR Z

I	Z
1	1
0	0

FUNCTIONAL SCHEMATIC

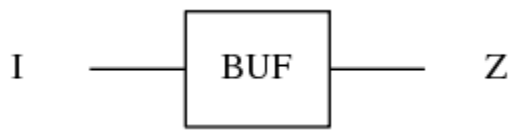

PIN CAPACITANCE (pf)

Pin	Type	Capacitance (pf)
I	input	0.0057

DELAY AND OUTPUT TRANSITION TIME corresponding to min slew and load

Input Pin	Output	When Condition	Tin (ns)	Out Load (pf)	Delay (ns)	Tout (ns)
I(LH)	Z(LH)	default	0.0100	0.0010	0.1503	0.0278
I(HL)	Z(HL)	default	0.0100	0.0010	0.1387	0.0257

DYNAMIC ENERGY

Input Pin	When Condition	Tin (ns)	Output	Out Load (pf)	Energy (uW/MHz)
I	default	0.0100	Z(LH)	0.0010	0.2373
I	default	0.0100	Z(HL)	0.0010	0.3572

LEAKAGE POWER

When Condition	Power (nW)
!I	0.1292
I	0.1277

gf180mcu_fd_sc_mcu9t5v0__clkbuf_x20

gf180mcu_fd_sc_mcu9t5v0__clkbuf_x20 symbol

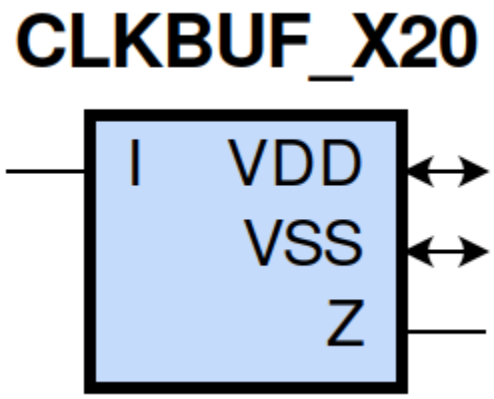

gf180mcu_fd_sc_mcu9t5v0__clkbuf_x20 schematic

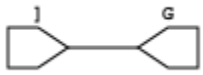

gf180mcu_fd_sc_mcu9t5v0__clkbuf_x20 layout

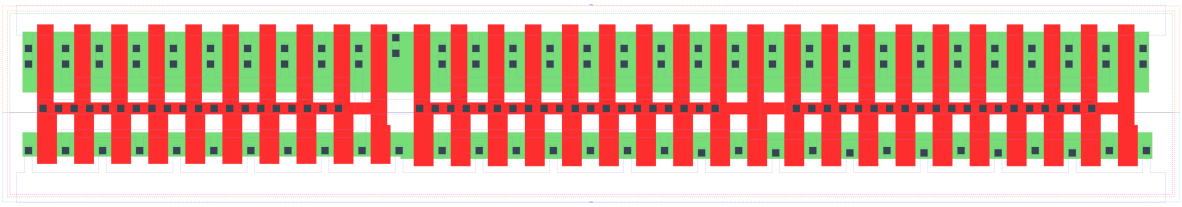

CLKBUF_X20 is a clock buffer with 20X drive strength

Attributes

Attribute	Value
area	174.988800 μm^2

OUTPUT FUNCTIONS

Output Pin	Function
Z	I

TRUTH TABLE FOR Z

I	Z
1	1
0	0

FUNCTIONAL SCHEMATIC

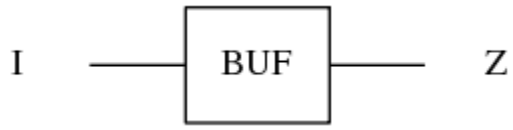

PIN CAPACITANCE (pf)

Pin	Type	Capacitance (pf)
I	input	0.0549

DELAY AND OUTPUT TRANSITION TIME corresponding to min slew and load

Input Pin	Output	When Condition	Tin (ns)	Out Load (pf)	Delay (ns)	Tout (ns)
I(LH)	Z(LH)	default	0.0100	0.0010	0.1394	0.0251
I(HL)	Z(HL)	default	0.0100	0.0010	0.1296	0.0232

DYNAMIC ENERGY

Input Pin	When Condition	Tin (ns)	Output	Out Load (pf)	Energy (uW/MHz)
I	default	0.0100	Z(LH)	0.0010	2.2908
I	default	0.0100	Z(HL)	0.0010	3.3937

LEAKAGE POWER

When Condition	Power (nW)
!I	0.8415
I	0.8275

gf180mcu_fd_sc_mcu9t5v0__clkbuf_3

gf180mcu_fd_sc_mcu9t5v0__clkbuf_3 symbol

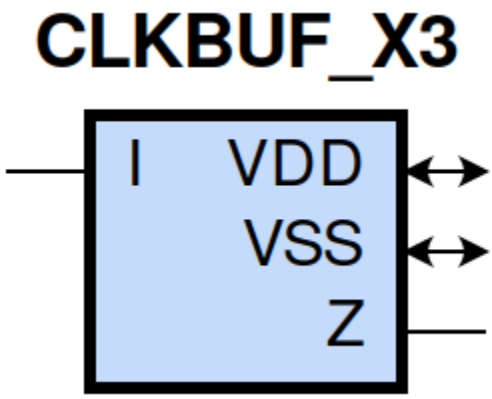

gf180mcu_fd_sc_mcu9t5v0__clkbuf_3 schematic

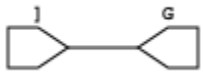

gf180mcu_fd_sc_mcu9t5v0__clkbuf_3 layout

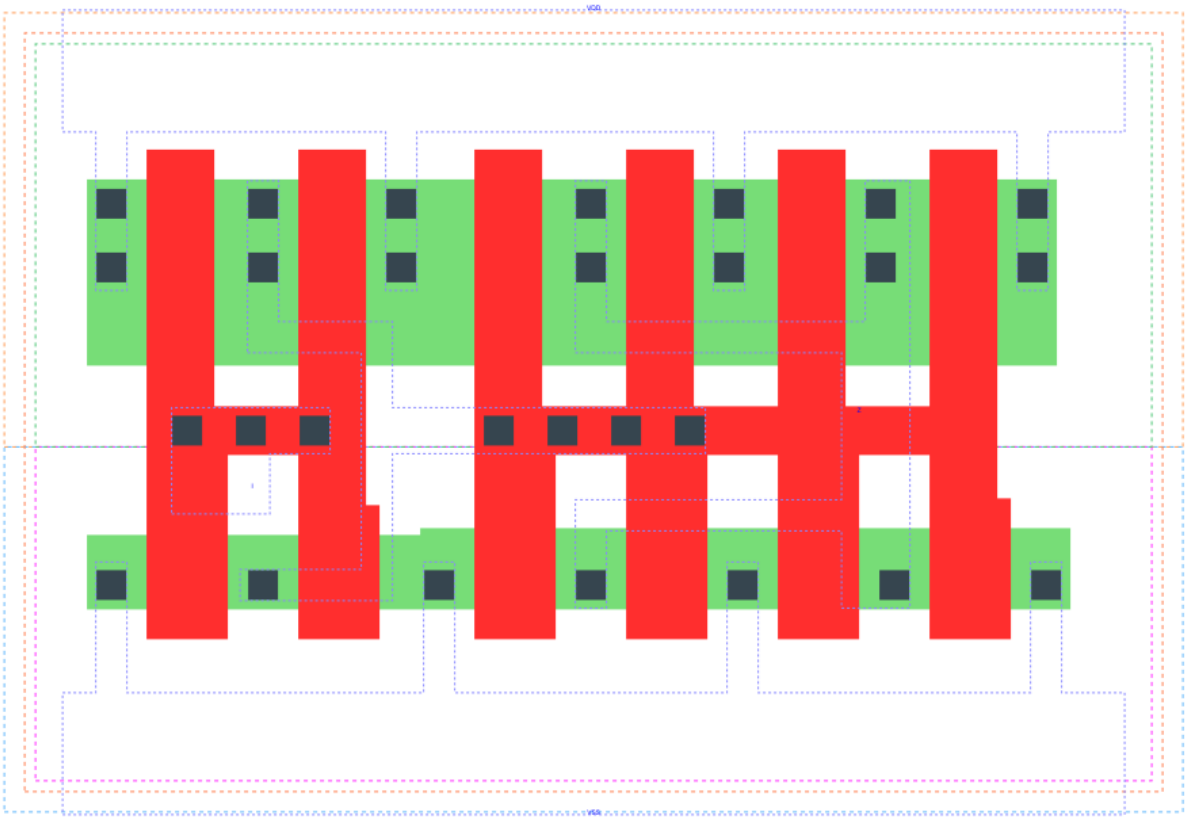

CLKBUF_X3 is a clock buffer with 3X drive strength

Attributes

Attribute	Value
area	39.513600 μm^2

OUTPUT FUNCTIONS

Output Pin	Function
Z	I

TRUTH TABLE FOR Z

I	Z
1	1
0	0

FUNCTIONAL SCHEMATIC

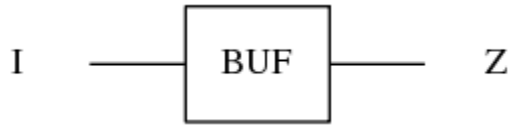

PIN CAPACITANCE (pf)

Pin	Type	Capacitance (pf)
I	input	0.0087

DELAY AND OUTPUT TRANSITION TIME corresponding to min slew and load

Input Pin	Output	When Condition	Tin (ns)	Out Load (pf)	Delay (ns)	Tout (ns)
I(LH)	Z(LH)	default	0.0100	0.0010	0.1433	0.0273
I(HL)	Z(HL)	default	0.0100	0.0010	0.1348	0.0253

DYNAMIC ENERGY

Input Pin	When Condition	Tin (ns)	Output	Out Load (pf)	Energy (uW/MHz)
I	default	0.0100	Z(LH)	0.0010	0.3496
I	default	0.0100	Z(HL)	0.0010	0.5317

LEAKAGE POWER

When Condition	Power (nW)
!I	0.2074
I	0.2051

gf180mcu_fd_sc_mcu9t5v0__clkbuf_4

gf180mcu_fd_sc_mcu9t5v0__clkbuf_4 symbol

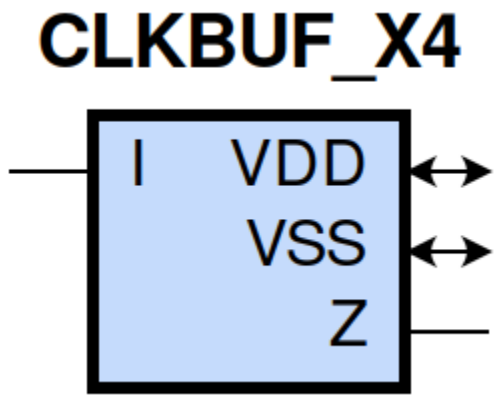

gf180mcu_fd_sc_mcu9t5v0__clkbuf_4 schematic

gf180mcu_fd_sc_mcu9t5v0__clkbuf_4 layout

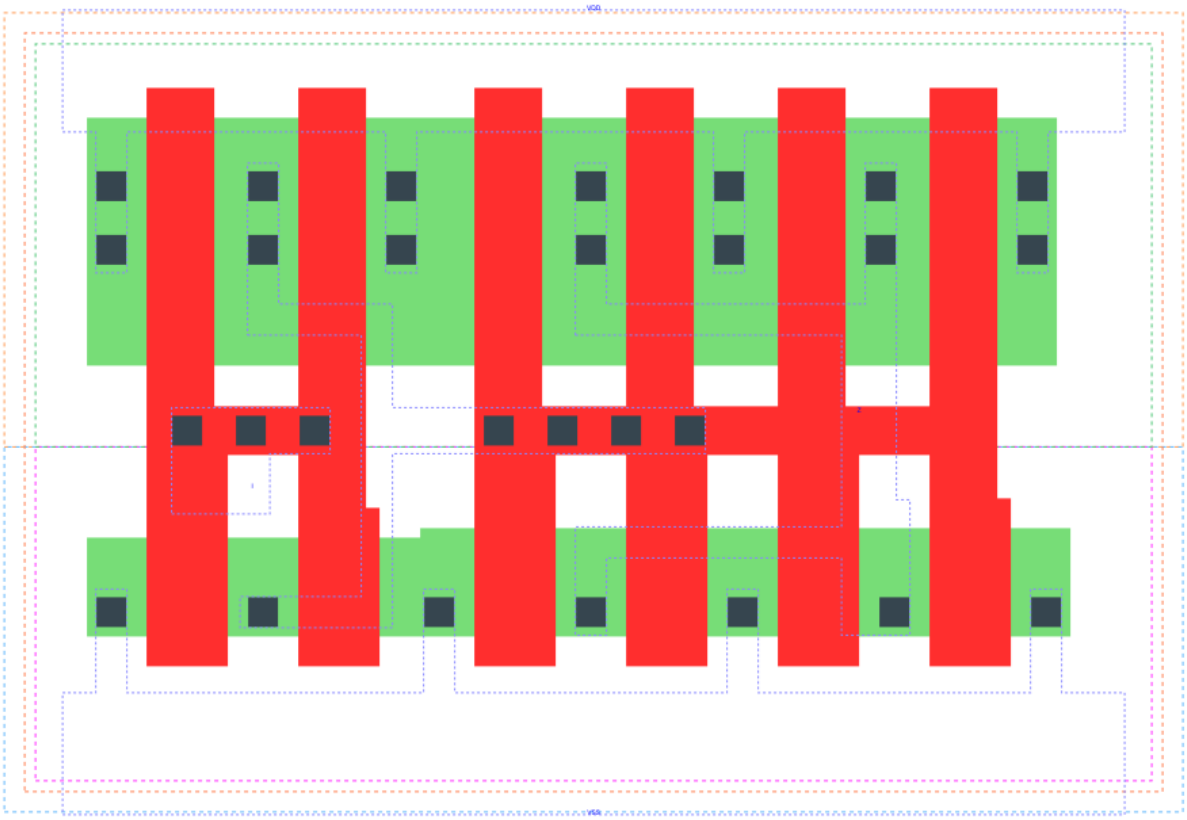

CLKBUF_X4 is a clock buffer with 4X drive strength

Attributes

Attribute	Value
area	39.513600 μm^2

OUTPUT FUNCTIONS

Output Pin	Function
Z	I

TRUTH TABLE FOR Z

I	Z
1	1
0	0

FUNCTIONAL SCHEMATIC

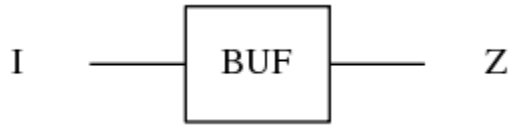

PIN CAPACITANCE (pf)

Pin	Type	Capacitance (pf)
I	input	0.0111

DELAY AND OUTPUT TRANSITION TIME corresponding to min slew and load

Input Pin	Output	When Condition	Tin (ns)	Out Load (pf)	Delay (ns)	Tout (ns)
I(LH)	Z(LH)	default	0.0100	0.0010	0.1384	0.0254
I(HL)	Z(HL)	default	0.0100	0.0010	0.1285	0.0233

DYNAMIC ENERGY

Input Pin	When Condition	Tin (ns)	Output	Out Load (pf)	Energy (uW/MHz)
I	default	0.0100	Z(LH)	0.0010	0.4468
I	default	0.0100	Z(HL)	0.0010	0.6684

LEAKAGE POWER

When Condition	Power (nW)
!I	0.2083
I	0.2055

gf180mcu_fd_sc_mcu9t5v0__clkbuf_8

gf180mcu_fd_sc_mcu9t5v0__clkbuf_8 symbol

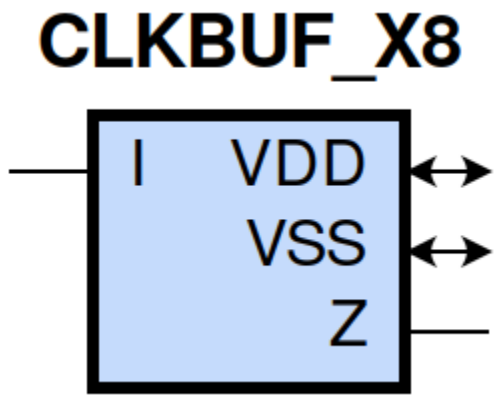

gf180mcu_fd_sc_mcu9t5v0__clkbuf_8 schematic

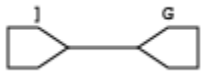

gf180mcu_fd_sc_mcu9t5v0__clkbuf_8 layout

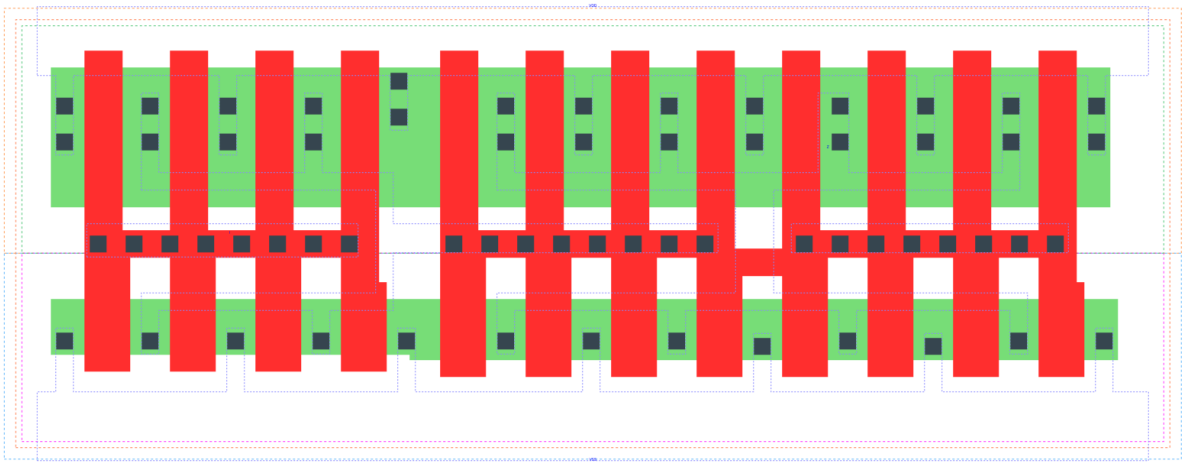

CLKBUF_X8 is a clock buffer with 8X drive strength

Attributes

Attribute	Value
area	73.382400 μm^2

OUTPUT FUNCTIONS

Output Pin	Function
Z	I

TRUTH TABLE FOR Z

I	Z
1	1
0	0

FUNCTIONAL SCHEMATIC

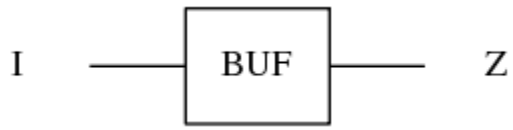

PIN CAPACITANCE (pf)

Pin	Type	Capacitance (pf)
I	input	0.0221

DELAY AND OUTPUT TRANSITION TIME corresponding to min slew and load

Input Pin	Output	When Condition	Tin (ns)	Out Load (pf)	Delay (ns)	Tout (ns)
I(LH)	Z(LH)	default	0.0100	0.0010	0.1392	0.0253
I(HL)	Z(HL)	default	0.0100	0.0010	0.1291	0.0232

DYNAMIC ENERGY

Input Pin	When Condition	Tin (ns)	Output	Out Load (pf)	Energy (uW/MHz)
I	default	0.0100	Z(LH)	0.0010	0.9098
I	default	0.0100	Z(HL)	0.0010	1.3568

LEAKAGE POWER

When Condition	Power (nW)
!I	0.3666
I	0.3610

gf180mcu_fd_sc_mcu9t5v0__clkinv_1

gf180mcu_fd_sc_mcu9t5v0__clkinv_1 symbol

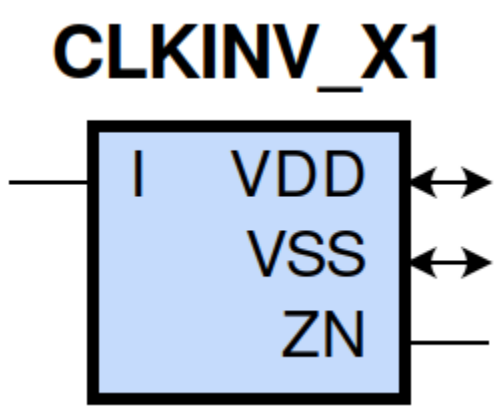

gf180mcu_fd_sc_mcu9t5v0__clkinv_1 schematic

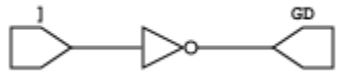

gf180mcu_fd_sc_mcu9t5v0__clkinv_1 layout

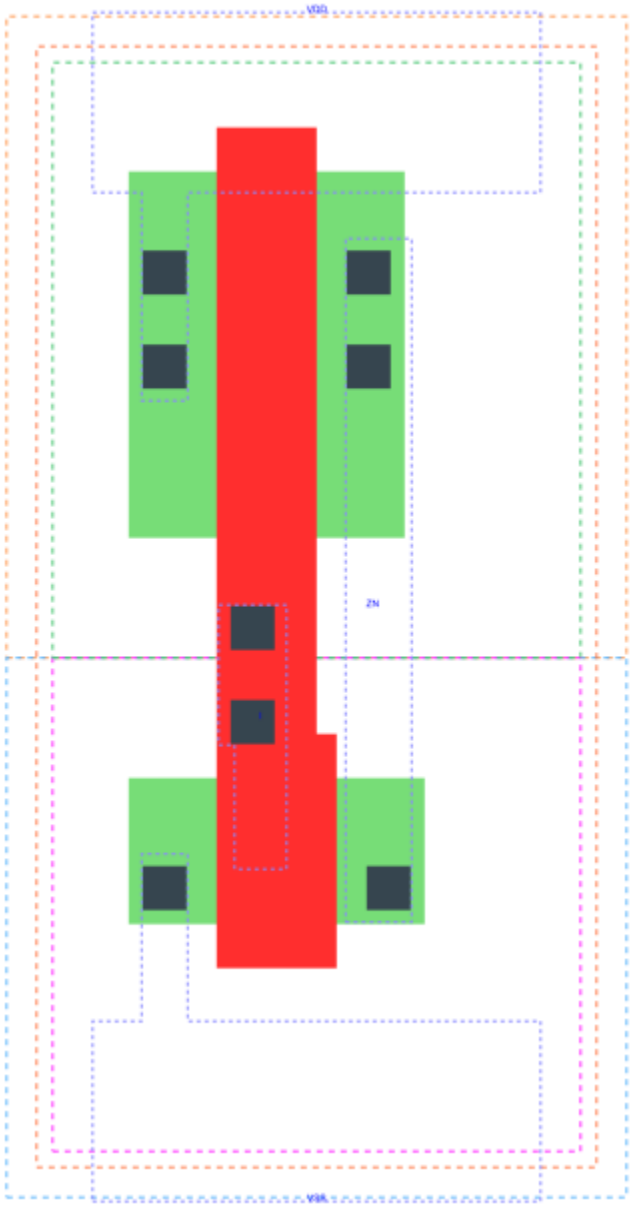

CLKINV_X1 is a clock inverter with 1X drive strength

Attributes

Attribute	Value
area	11.289600 μm^2

OUTPUT FUNCTIONS

Output Pin	Function
ZN	(!I)

TRUTH TABLE FOR ZN

I	ZN
0	1
1	0

FUNCTIONAL SCHEMATIC

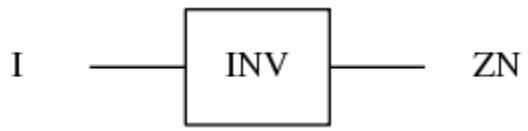

PIN CAPACITANCE (pf)

Pin	Type	Capacitance (pf)
I	input	0.0057

DELAY AND OUTPUT TRANSITION TIME corresponding to min slew and load

Input Pin	Output	When Condition	Tin (ns)	Out Load (pf)	Delay (ns)	Tout (ns)
I(LH)	ZN(HL)	default	0.0100	0.0010	0.0480	0.0234
I(HL)	ZN(LH)	default	0.0100	0.0010	0.0383	0.0250

DYNAMIC ENERGY

Input Pin	When Condition	Tin (ns)	Output	Out Load (pf)	Energy (uW/MHz)
I	default	0.0100	ZN(HL)	0.0010	-0.0059
I	default	0.0100	ZN(LH)	0.0010	0.1172

LEAKAGE POWER

When Condition	Power (nW)
!I	0.0754
I	0.0769

gf180mcu_fd_sc_mcu9t5v0__clkinv_x12

gf180mcu_fd_sc_mcu9t5v0__clkinv_x12 symbol

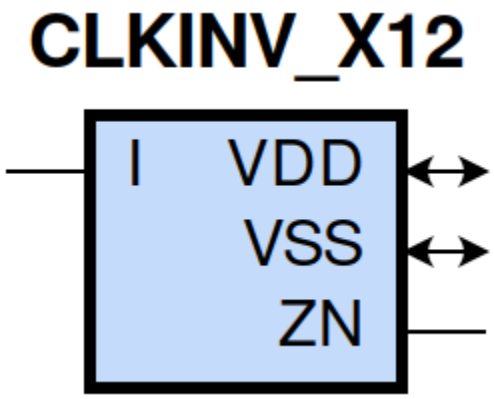

gf180mcu_fd_sc_mcu9t5v0__clkinv_x12 schematic

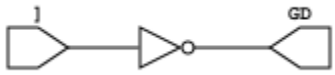

gf180mcu_fd_sc_mcu9t5v0__clkinv_x12 layout

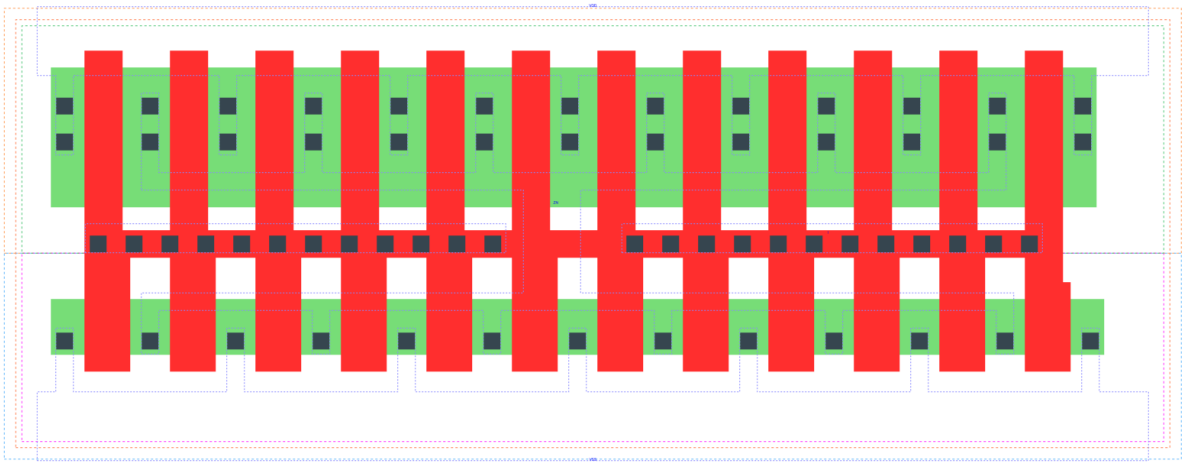

CLKINV_X12 is a clock inverter with 12X drive strength

Attributes

Attribute	Value
area	73.382400 μm^2

OUTPUT FUNCTIONS

Output Pin	Function
ZN	(!I)

TRUTH TABLE FOR ZN

I	ZN
0	1
1	0

FUNCTIONAL SCHEMATIC

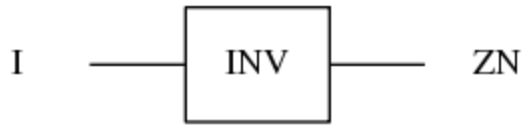

PIN CAPACITANCE (pf)

Pin	Type	Capacitance (pf)
I	input	0.0661

DELAY AND OUTPUT TRANSITION TIME corresponding to min slew and load

Input Pin	Output	When Condition	Tin (ns)	Out Load (pf)	Delay (ns)	Tout (ns)
I(LH)	ZN(HL)	default	0.0100	0.0010	0.0352	0.0132
I(HL)	ZN(LH)	default	0.0100	0.0010	0.0266	0.0149

DYNAMIC ENERGY

Input Pin	When Condition	Tin (ns)	Output	Out Load (pf)	Energy (uW/MHz)
I	default	0.0100	ZN(HL)	0.0010	-0.2203
I	default	0.0100	ZN(LH)	0.0010	1.2242

LEAKAGE POWER

When Condition	Power (nW)
!I	0.3553
I	0.3723

gf180mcu_fd_sc_mcu9t5v0__clkinv_x16

gf180mcu_fd_sc_mcu9t5v0__clkinv_x16 symbol

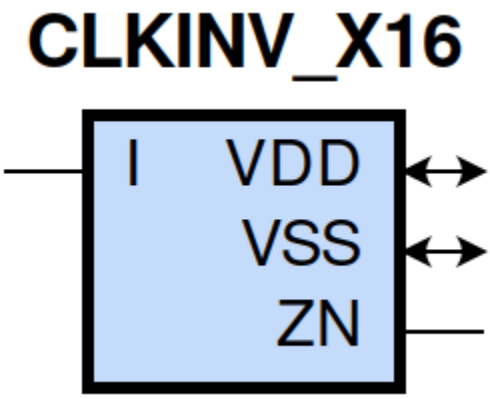

gf180mcu_fd_sc_mcu9t5v0__clkinv_x16 schematic

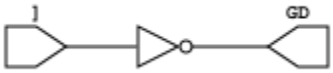

gf180mcu_fd_sc_mcu9t5v0__clkinv_x16 layout

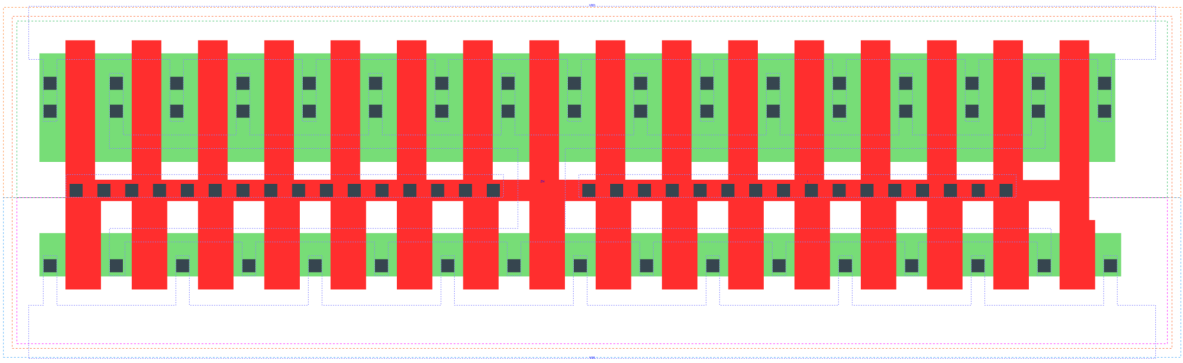

CLKINV_X16 is a clock inverter with 16X drive strength

Attributes

Attribute	Value
area	95.961600 μm^2

OUTPUT FUNCTIONS

Output Pin	Function
ZN	(!I)

TRUTH TABLE FOR ZN

I	ZN
0	1
1	0

FUNCTIONAL SCHEMATIC

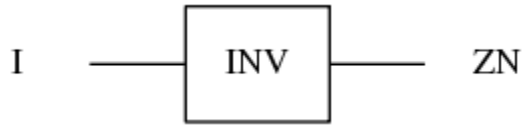

PIN CAPACITANCE (pf)

Pin	Type	Capacitance (pf)
I	input	0.0881

DELAY AND OUTPUT TRANSITION TIME corresponding to min slew and load

Input Pin	Output	When Condition	Tin (ns)	Out Load (pf)	Delay (ns)	Tout (ns)
I(LH)	ZN(HL)	default	0.0100	0.0010	0.0352	0.0131
I(HL)	ZN(LH)	default	0.0100	0.0010	0.0265	0.0149

DYNAMIC ENERGY

Input Pin	When Condition	Tin (ns)	Output	Out Load (pf)	Energy (uW/MHz)
I	default	0.0100	ZN(HL)	0.0010	-0.2941
I	default	0.0100	ZN(LH)	0.0010	1.6352

LEAKAGE POWER

When Condition	Power (nW)
!I	0.4570
I	0.4797

gf180mcu_fd_sc_mcu9t5v0__clkinv_2

gf180mcu_fd_sc_mcu9t5v0__clkinv_2 symbol

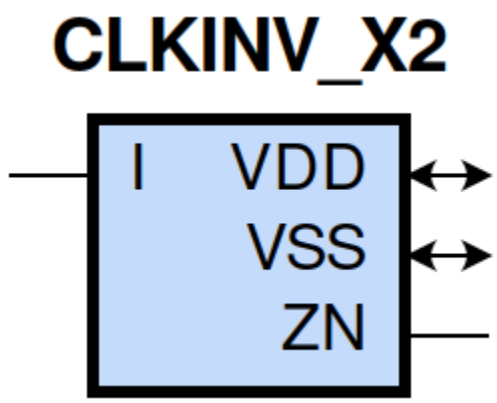

gf180mcu_fd_sc_mcu9t5v0__clkinv_2 schematic

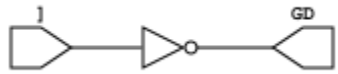

gf180mcu_fd_sc_mcu9t5v0__clkinv_2 layout

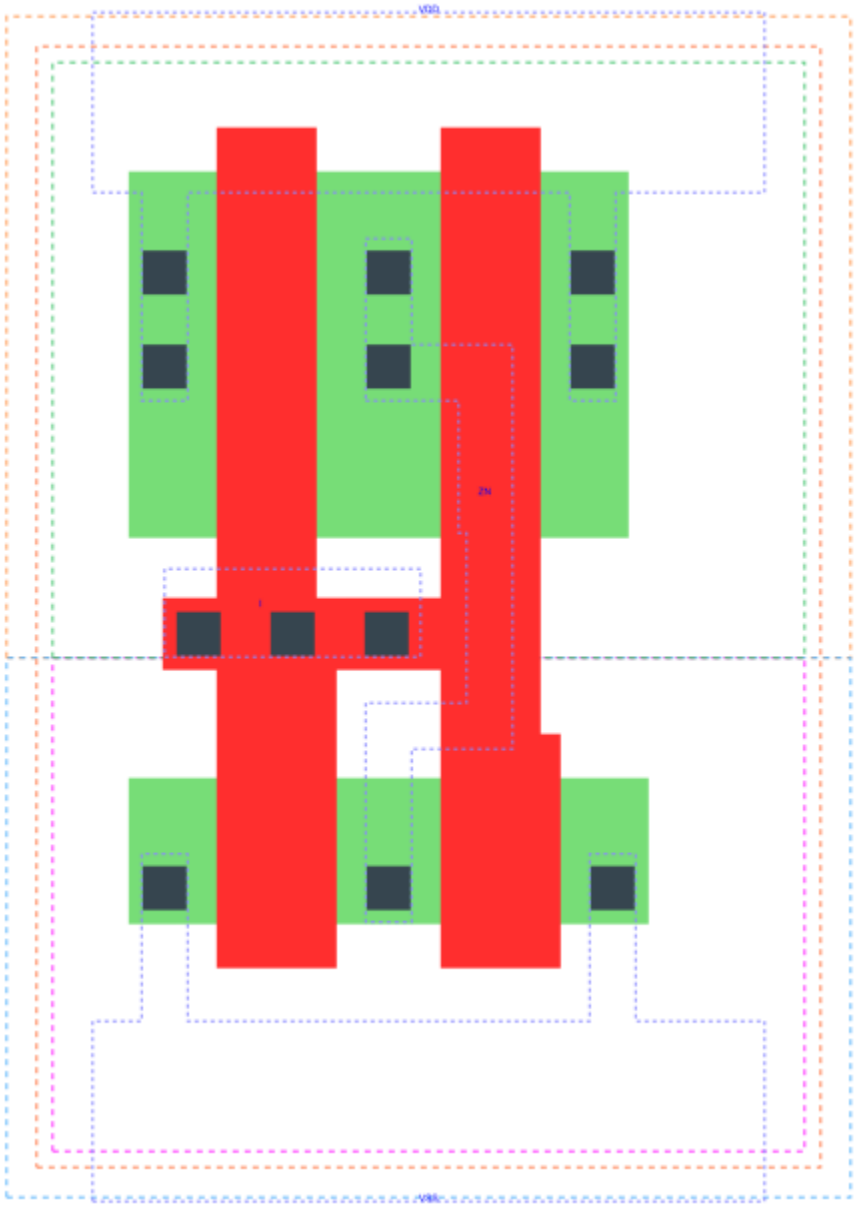

CLKINV_X2 is a clock inverter with 2X drive strength

Attributes

Attribute	Value
area	16.934400 μm^2

OUTPUT FUNCTIONS

Output Pin	Function
ZN	(!I)

TRUTH TABLE FOR ZN

I	ZN
0	1
1	0

FUNCTIONAL SCHEMATIC

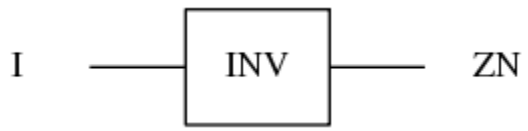

PIN CAPACITANCE (pf)

Pin	Type	Capacitance (pf)
I	input	0.0111

DELAY AND OUTPUT TRANSITION TIME corresponding to min slew and load

Input Pin	Output	When Condition	Tin (ns)	Out Load (pf)	Delay (ns)	Tout (ns)
I(LH)	ZN(HL)	default	0.0100	0.0010	0.0371	0.0150
I(HL)	ZN(LH)	default	0.0100	0.0010	0.0283	0.0168

DYNAMIC ENERGY

Input Pin	When Condition	Tin (ns)	Output	Out Load (pf)	Energy (uW/MHz)
I	default	0.0100	ZN(HL)	0.0010	-0.0358
I	default	0.0100	ZN(LH)	0.0010	0.2015

LEAKAGE POWER

When Condition	Power (nW)
!I	0.1009
I	0.1037

gf180mcu_fd_sc_mcu9t5v0__clkinv_x20

gf180mcu_fd_sc_mcu9t5v0__clkinv_x20 symbol

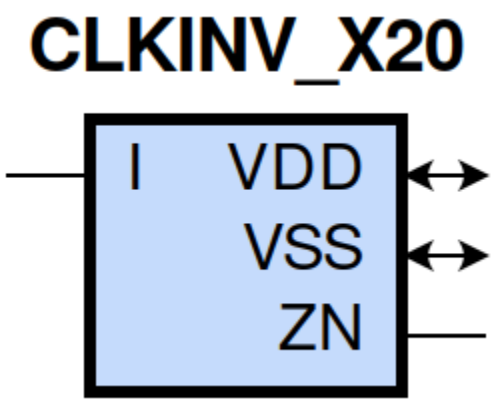

gf180mcu_fd_sc_mcu9t5v0__clkinv_x20 schematic

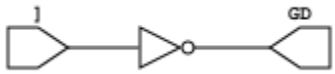

gf180mcu_fd_sc_mcu9t5v0__clkinv_x20 layout

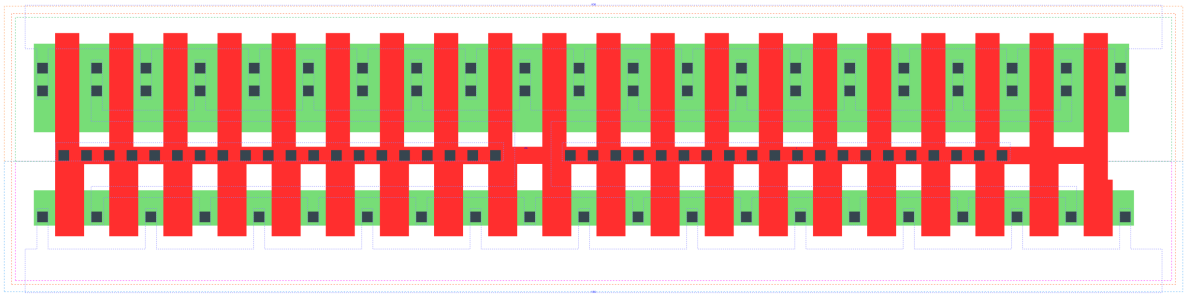

CLKINV_X20 is a clock inverter with 20X drive strength

Attributes

Attribute	Value
area	118.540800 μm^2

OUTPUT FUNCTIONS

Output Pin	Function
ZN	(!I)

TRUTH TABLE FOR ZN

I	ZN
0	1
1	0

FUNCTIONAL SCHEMATIC

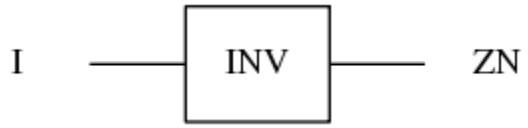

PIN CAPACITANCE (pf)

Pin	Type	Capacitance (pf)
I	input	0.1101

DELAY AND OUTPUT TRANSITION TIME corresponding to min slew and load

Input Pin	Output	When Condition	Tin (ns)	Out Load (pf)	Delay (ns)	Tout (ns)
I(LH)	ZN(HL)	default	0.0100	0.0010	0.0353	0.0131
I(HL)	ZN(LH)	default	0.0100	0.0010	0.0267	0.0148

DYNAMIC ENERGY

Input Pin	When Condition	Tin (ns)	Output	Out Load (pf)	Energy (uW/MHz)
I	default	0.0100	ZN(HL)	0.0010	-0.3685
I	default	0.0100	ZN(LH)	0.0010	2.0444

LEAKAGE POWER

When Condition	Power (nW)
!I	0.5588
I	0.5871

gf180mcu_fd_sc_mcu9t5v0__clkinv_3

gf180mcu_fd_sc_mcu9t5v0__clkinv_3 symbol

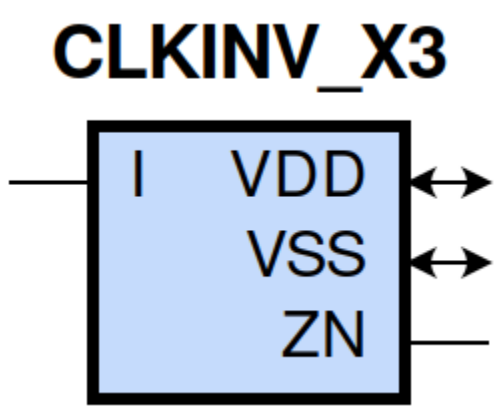

gf180mcu_fd_sc_mcu9t5v0__clkinv_3 schematic

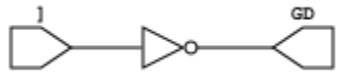

gf180mcu_fd_sc_mcu9t5v0__clkinv_3 layout

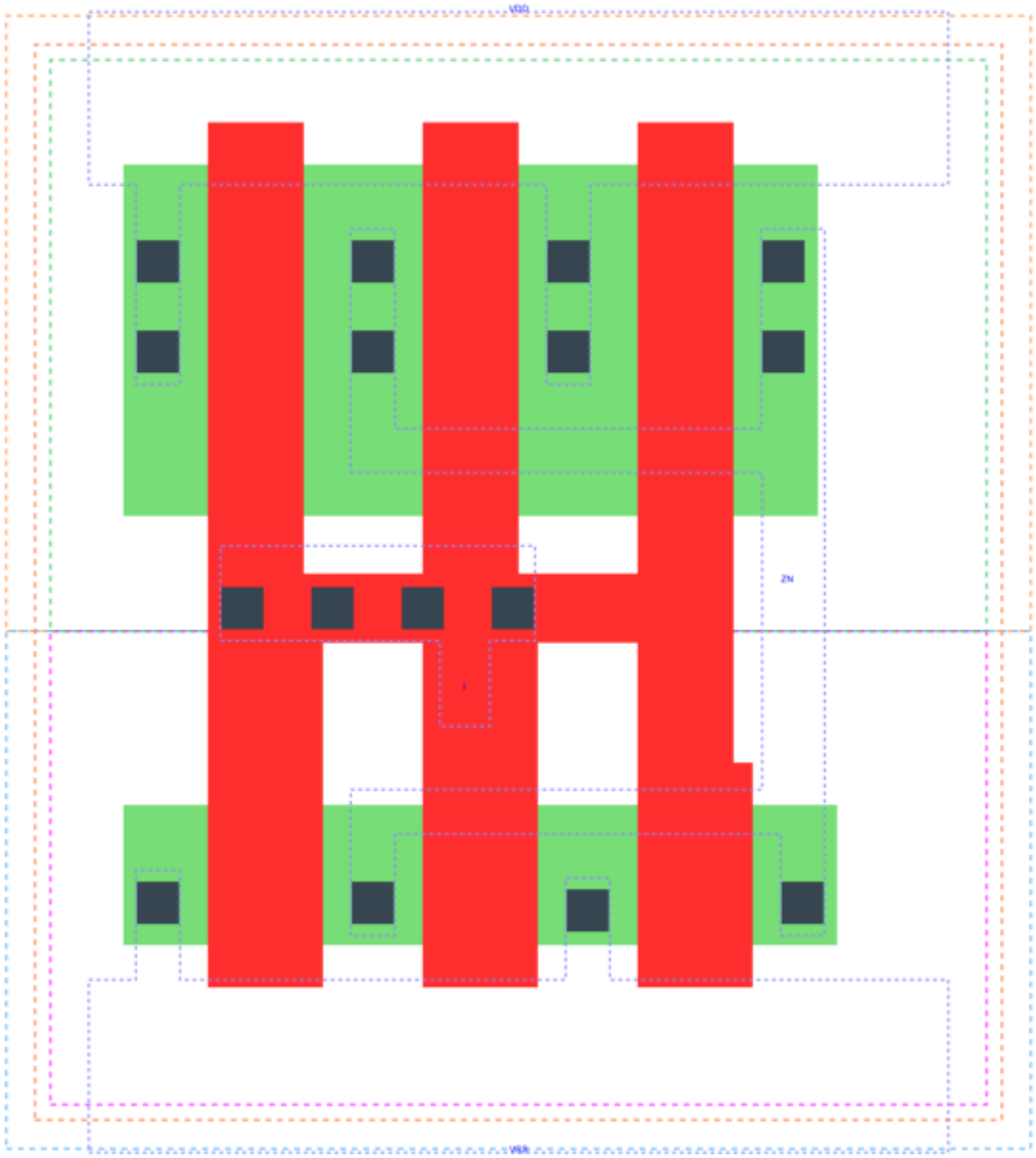

CLKINV_X3 is a clock inverter with 3X drive strength

Attributes

Attribute	Value
area	22.579200 μm^2

OUTPUT FUNCTIONS

Output Pin	Function
ZN	(!I)

TRUTH TABLE FOR ZN

I	ZN
0	1
1	0

FUNCTIONAL SCHEMATIC

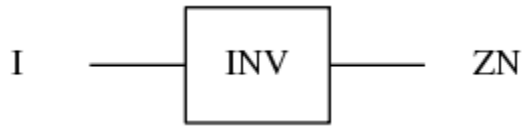

PIN CAPACITANCE (pf)

Pin	Type	Capacitance (pf)
I	input	0.0167

DELAY AND OUTPUT TRANSITION TIME corresponding to min slew and load

Input Pin	Output	When Condition	Tin (ns)	Out Load (pf)	Delay (ns)	Tout (ns)
I(LH)	ZN(HL)	default	0.0100	0.0010	0.0388	0.0162
I(HL)	ZN(LH)	default	0.0100	0.0010	0.0298	0.0179

DYNAMIC ENERGY

Input Pin	When Condition	Tin (ns)	Output	Out Load (pf)	Energy (uW/MHz)
I	default	0.0100	ZN(HL)	0.0010	-0.0423
I	default	0.0100	ZN(LH)	0.0010	0.3212

LEAKAGE POWER

When Condition	Power (nW)
!I	0.1263
I	0.1306

gf180mcu_fd_sc_mcu9t5v0__clkinv_4

gf180mcu_fd_sc_mcu9t5v0__clkinv_4 symbol

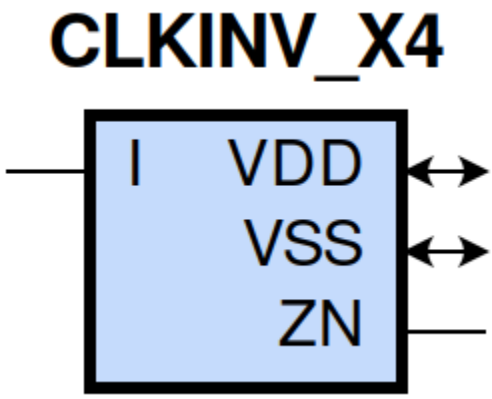

gf180mcu_fd_sc_mcu9t5v0__clkinv_4 schematic

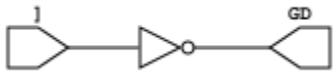

gf180mcu_fd_sc_mcu9t5v0__clkinv_4 layout

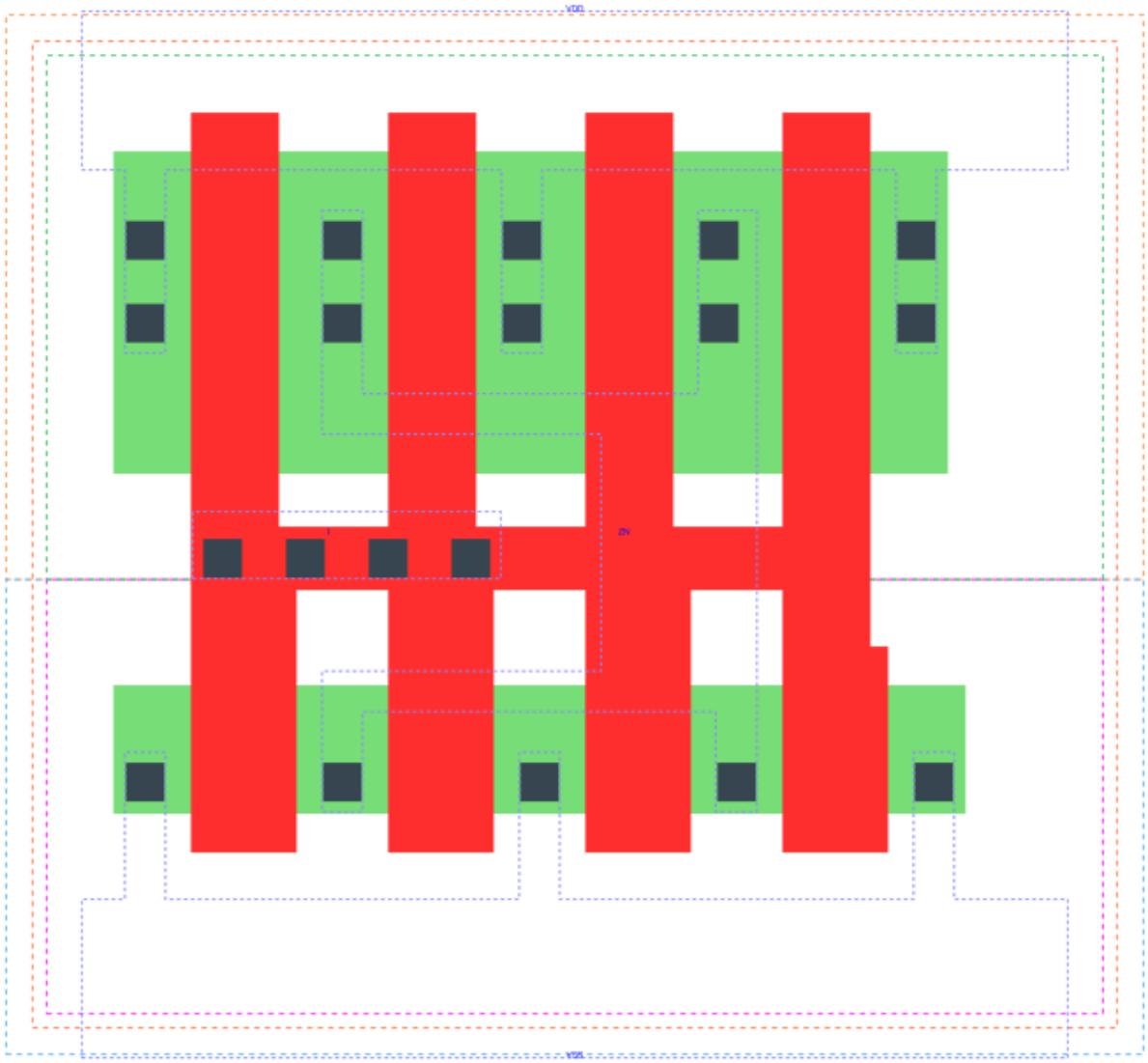

CLKINV_X4 is a clock inverter with 4X drive strength

Attributes

Attribute	Value
area	28.224000 μm^2

OUTPUT FUNCTIONS

Output Pin	Function
ZN	(!I)

TRUTH TABLE FOR ZN

I	ZN
0	1
1	0

FUNCTIONAL SCHEMATIC

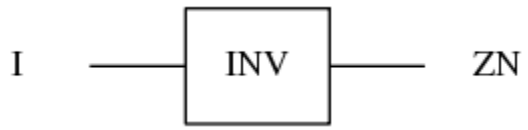

PIN CAPACITANCE (pf)

Pin	Type	Capacitance (pf)
I	input	0.0218

DELAY AND OUTPUT TRANSITION TIME corresponding to min slew and load

Input Pin	Output	When Condition	Tin (ns)	Out Load (pf)	Delay (ns)	Tout (ns)
I(LH)	ZN(HL)	default	0.0100	0.0010	0.0355	0.0138
I(HL)	ZN(LH)	default	0.0100	0.0010	0.0268	0.0155

DYNAMIC ENERGY

Input Pin	When Condition	Tin (ns)	Output	Out Load (pf)	Energy (uW/MHz)
I	default	0.0100	ZN(HL)	0.0010	-0.0727
I	default	0.0100	ZN(LH)	0.0010	0.4030

LEAKAGE POWER

When Condition	Power (nW)
!I	0.1518
I	0.1574

gf180mcu_fd_sc_mcu9t5v0__clkinv_8

gf180mcu_fd_sc_mcu9t5v0__clkinv_8 symbol

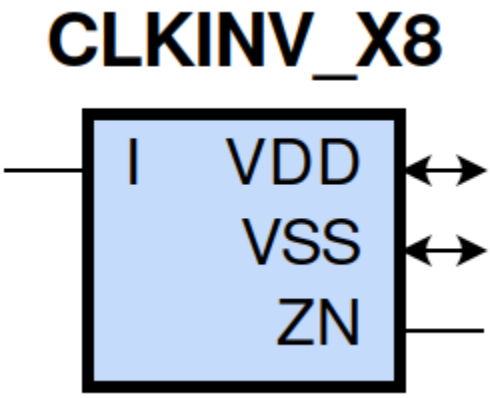

gf180mcu_fd_sc_mcu9t5v0__clkinv_8 schematic

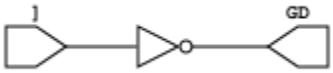

gf180mcu_fd_sc_mcu9t5v0__clkinv_8 layout

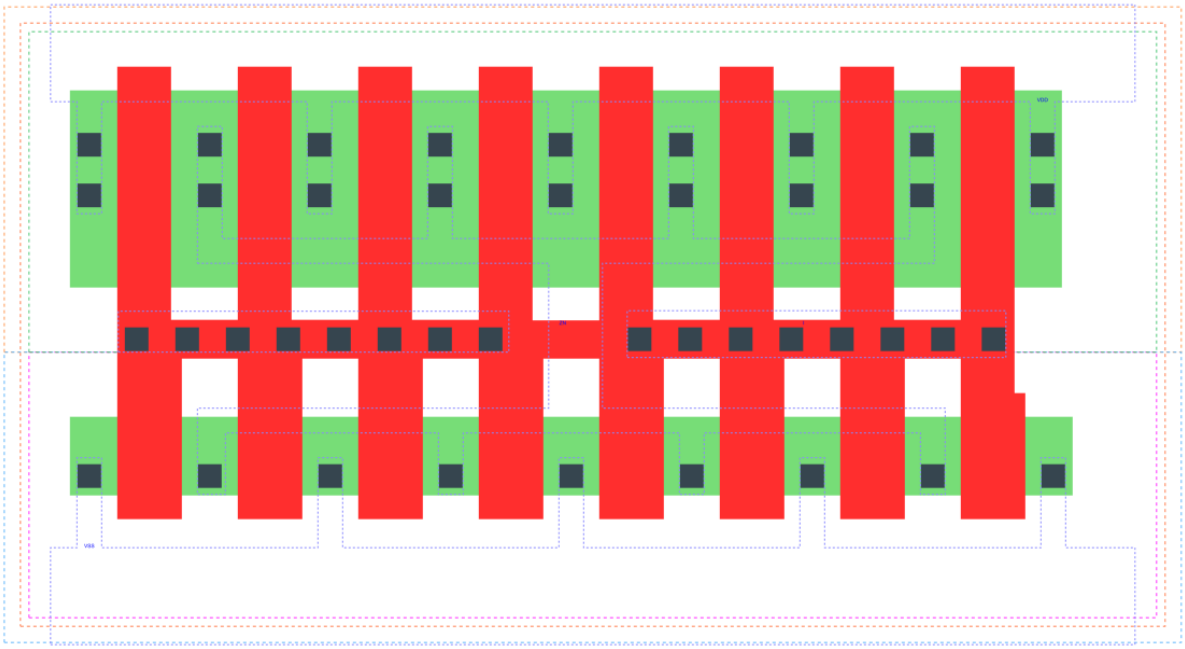

CLKINV_X8 is a clock inverter with 8X drive strength

Attributes

Attribute	Value
area	50.803200 μm^2

OUTPUT FUNCTIONS

Output Pin	Function
ZN	(!I)

TRUTH TABLE FOR ZN

I	ZN
0	1
1	0

FUNCTIONAL SCHEMATIC

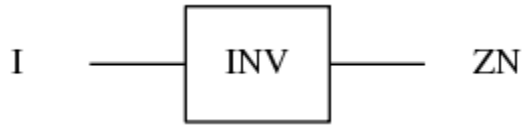

PIN CAPACITANCE (pf)

Pin	Type	Capacitance (pf)
I	input	0.0440

DELAY AND OUTPUT TRANSITION TIME corresponding to min slew and load

Input Pin	Output	When Condition	Tin (ns)	Out Load (pf)	Delay (ns)	Tout (ns)
I(LH)	ZN(HL)	default	0.0100	0.0010	0.0351	0.0133
I(HL)	ZN(LH)	default	0.0100	0.0010	0.0265	0.0150

DYNAMIC ENERGY

Input Pin	When Condition	Tin (ns)	Output	Out Load (pf)	Energy (uW/MHz)
I	default	0.0100	ZN(HL)	0.0010	-0.1466
I	default	0.0100	ZN(LH)	0.0010	0.8135

LEAKAGE POWER

When Condition	Power (nW)
!I	0.2535
I	0.2649

gf180mcu_fd_sc_mcu9t5v0__dffnq_1

gf180mcu_fd_sc_mcu9t5v0__dffnq_1 symbol

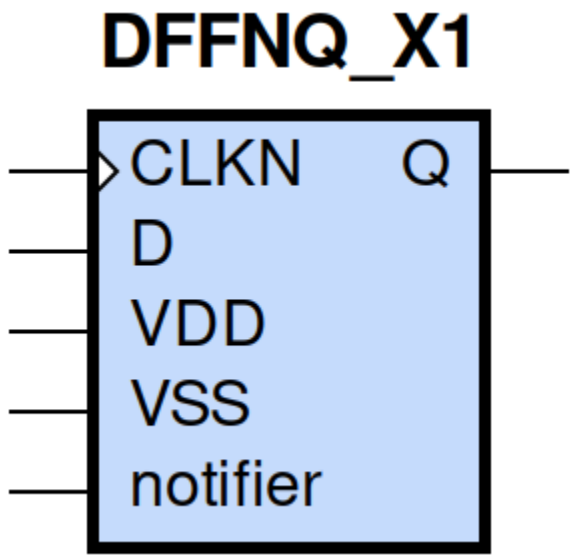

gf180mcu_fd_sc_mcu9t5v0__dffnq_1 schematic

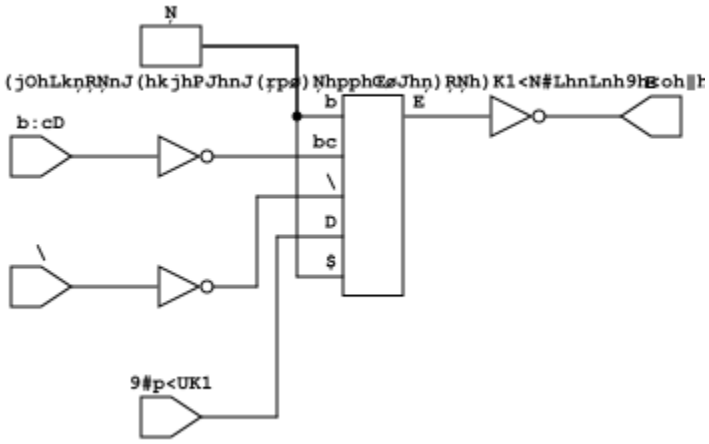

gf180mcu_fd_sc_mcu9t5v0__dffnq_1 layout

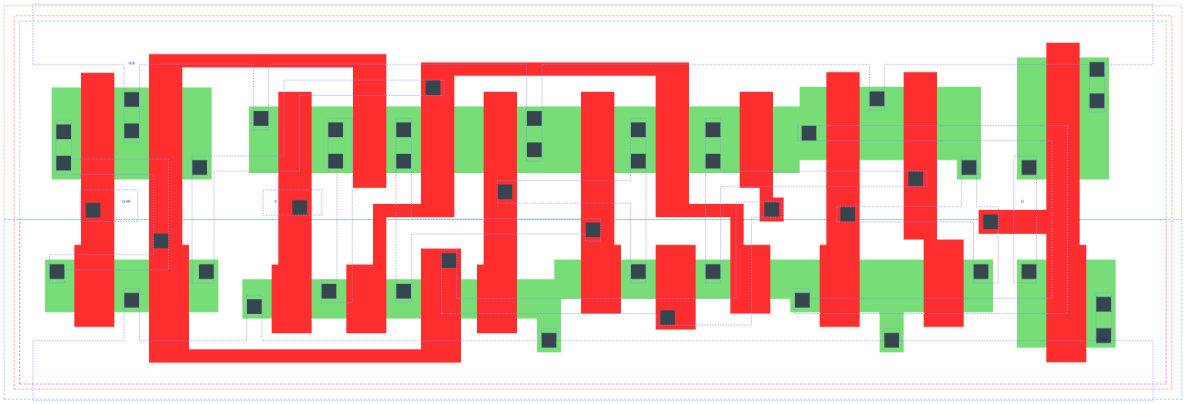

DFFNQ_X1 is a negative edge triggered D-type flip flop with 1X drive strength

Attributes

Attribute	Value
area	84.672000 μm^2

TRUTH TABLE

Input		Output
D	CLKN	Q
L	↓	L
H	↓	H

FUNCTIONAL SCHEMATIC

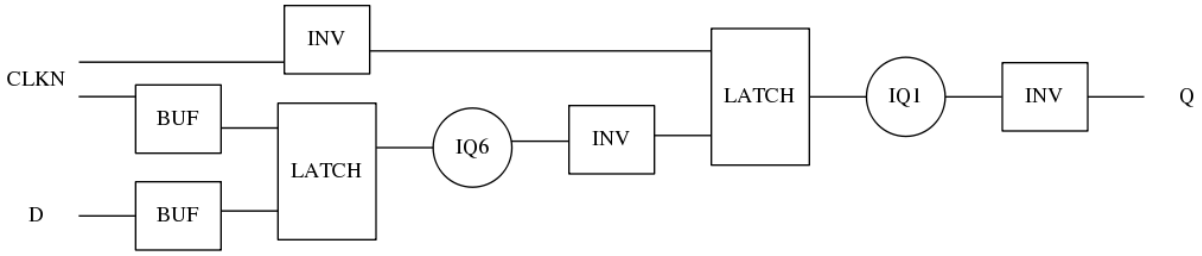

CONSTRAINTS

Constraint Pin	Related Pin	setup(ns)	hold(ns)
D(HL)	CLKN(HL)	0.2060	0.0060
D(LH)	CLKN(HL)	0.1320	0.1030

Constraint Pin	Related Pin	Minimum Pulse Width(ns)
CLKN(LHL)	CLKN(LH)	0.3150
CLKN(LHL)	CLKN(LH)	0.2780
CLKN(HLH)	CLKN(HL)	0.3290
CLKN(HLH)	CLKN(HL)	0.3490

PIN CAPACITANCE (pf)

Pin	Type	Capacitance (pf)
CLKN	input	0.0051
D	input	0.0039

DELAY AND OUTPUT TRANSITION TIME corresponding to min slew and load

Input Pin	Output	When Condition	Tin (ns)	Out Load (pf)	Delay (ns)	Tout (ns)
CLKN(HL)	Q(LH)	D	0.0100	0.0010	0.5565	0.0378
CLKN(HL)	Q(HL)	!D	0.0100	0.0010	0.5012	0.0380

DYNAMIC ENERGY

Input Pin	When Condition	Tin (ns)	Output	Out Load (pf)	Energy (uW/MHz)
CLKN	D	0.0100	Q(LH)	0.0010	0.9838
CLKN	!D	0.0100	Q(HL)	0.0010	0.8891
D(LH)	!CLKN	0.0100	n/a	n/a	0.0086
D(LH)	CLKN	0.0100	n/a	n/a	0.1984
CLKN(LH)	!D	0.0100	n/a	n/a	0.2587
CLKN(LH)	D	0.0100	n/a	n/a	0.2583
CLKN(HL)	!D	0.0100	n/a	n/a	0.4081
CLKN(HL)	D	0.0100	n/a	n/a	0.4086
D(HL)	!CLKN	0.0100	n/a	n/a	0.0861
D(HL)	CLKN	0.0100	n/a	n/a	0.3015

LEAKAGE POWER

When Condition	Power (nW)
!CLKN&!D	0.4915
CLKN&!D	0.4103
!CLKN&D	0.5192
CLKN&D	0.4078

gf180mcu_fd_sc_mcu9t5v0__dffnq_2

gf180mcu_fd_sc_mcu9t5v0__dffnq_2 symbol

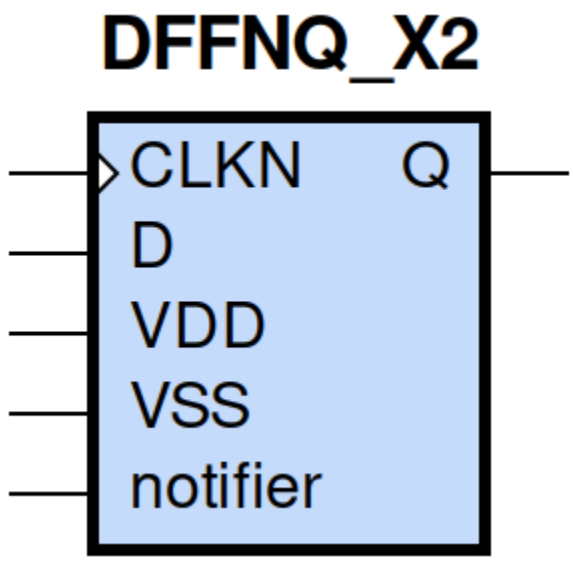

gf180mcu_fd_sc_mcu9t5v0__dffnq_2 schematic

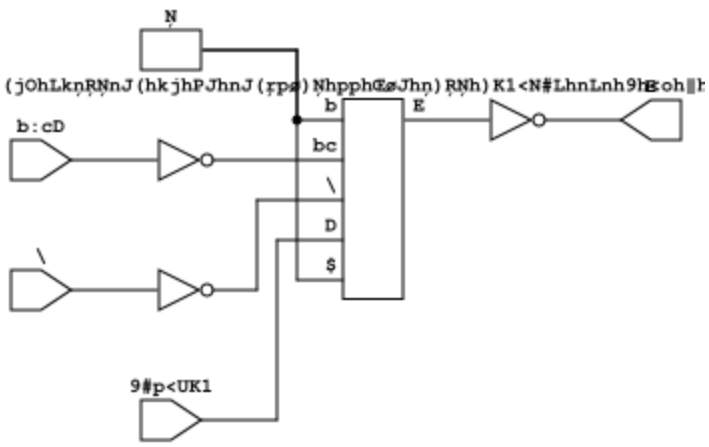

gf180mcu_fd_sc_mcu9t5v0__dffnq_2 layout

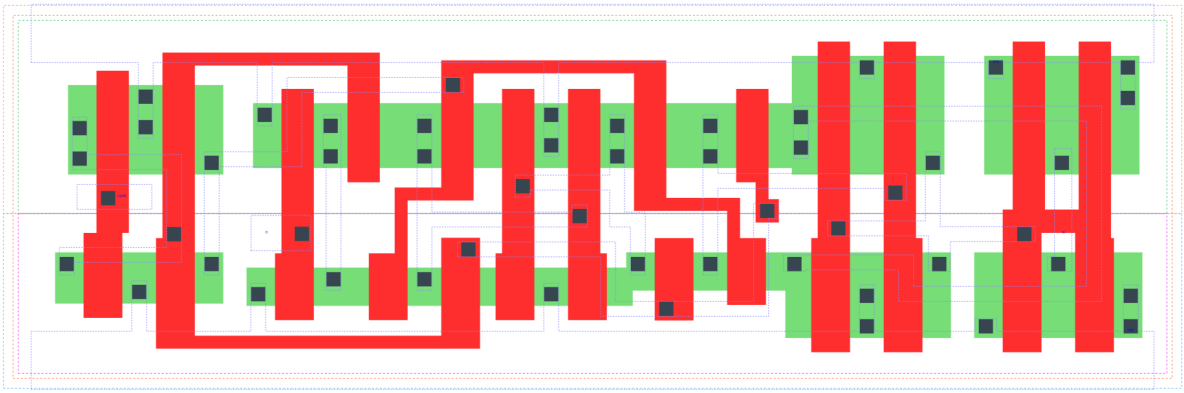

DFFNQ_X2 is a negative edge triggered D-type flip flop with 2X drive strength

Attributes

Attribute	Value
area	87.494400 μm^2

TRUTH TABLE

Input		Output
D	CLKN	Q
L	↓	L
H	↓	H

FUNCTIONAL SCHEMATIC

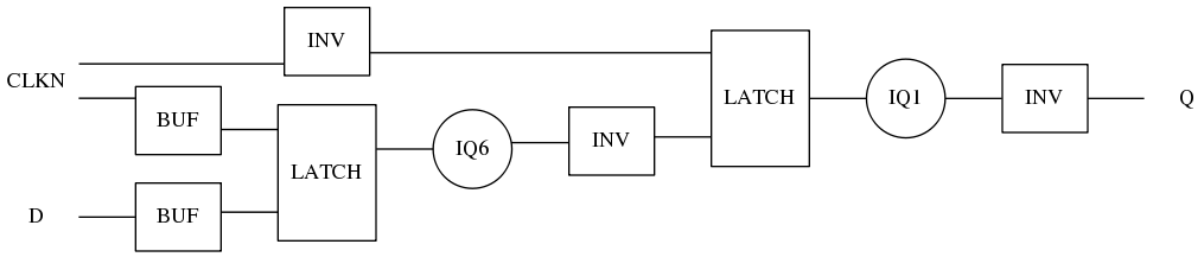

CONSTRAINTS

Constraint Pin	Related Pin	setup(ns)	hold(ns)
D(HL)	CLKN(HL)	0.2230	0.0230
D(LH)	CLKN(HL)	0.1550	0.1030

Constraint Pin	Related Pin	Minimum Pulse Width(ns)
CLKN(LHL)	CLKN(LH)	0.3330
CLKN(LHL)	CLKN(LH)	0.3020
CLKN(HLH)	CLKN(HL)	0.3580
CLKN(HLH)	CLKN(HL)	0.3780

PIN CAPACITANCE (pf)

Pin	Type	Capacitance (pf)
CLKN	input	0.0051
D	input	0.0039

DELAY AND OUTPUT TRANSITION TIME corresponding to min slew and load

Input Pin	Output	When Condition	Tin (ns)	Out Load (pf)	Delay (ns)	Tout (ns)
CLKN(HL)	Q(LH)	D	0.0100	0.0010	0.5765	0.0305
CLKN(HL)	Q(HL)	!D	0.0100	0.0010	0.5219	0.0313

DYNAMIC ENERGY

Input Pin	When Condition	Tin (ns)	Output	Out Load (pf)	Energy (uW/MHz)
CLKN	D	0.0100	Q(LH)	0.0010	1.2661
CLKN	!D	0.0100	Q(HL)	0.0010	1.1907
D(LH)	!CLKN	0.0100	n/a	n/a	0.0063
D(LH)	CLKN	0.0100	n/a	n/a	0.2128
CLKN(LH)	!D	0.0100	n/a	n/a	0.2580
CLKN(LH)	D	0.0100	n/a	n/a	0.2575
CLKN(HL)	!D	0.0100	n/a	n/a	0.4070
CLKN(HL)	D	0.0100	n/a	n/a	0.4077
D(HL)	!CLKN	0.0100	n/a	n/a	0.0895
D(HL)	CLKN	0.0100	n/a	n/a	0.3077

LEAKAGE POWER

When Condition	Power (nW)
!CLKN&!D	0.5192
CLKN&!D	0.4377
!CLKN&D	0.5453
CLKN&D	0.4339

gf180mcu_fd_sc_mcu9t5v0__dffnq_4

gf180mcu_fd_sc_mcu9t5v0__dffnq_4 symbol

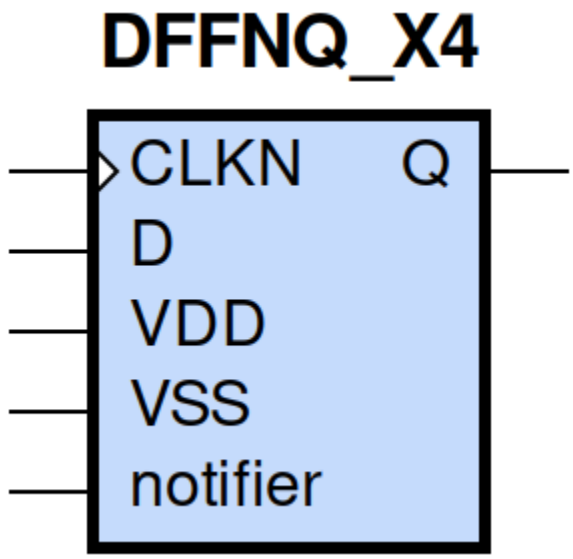

gf180mcu_fd_sc_mcu9t5v0__dffnq_4 schematic

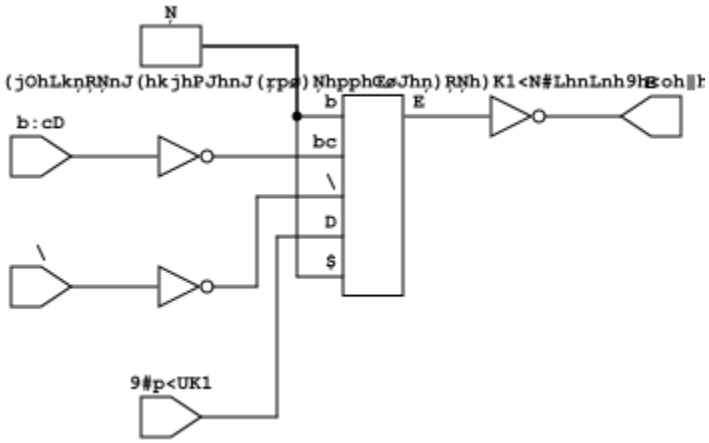

gf180mcu_fd_sc_mcu9t5v0__dffnq_4 layout

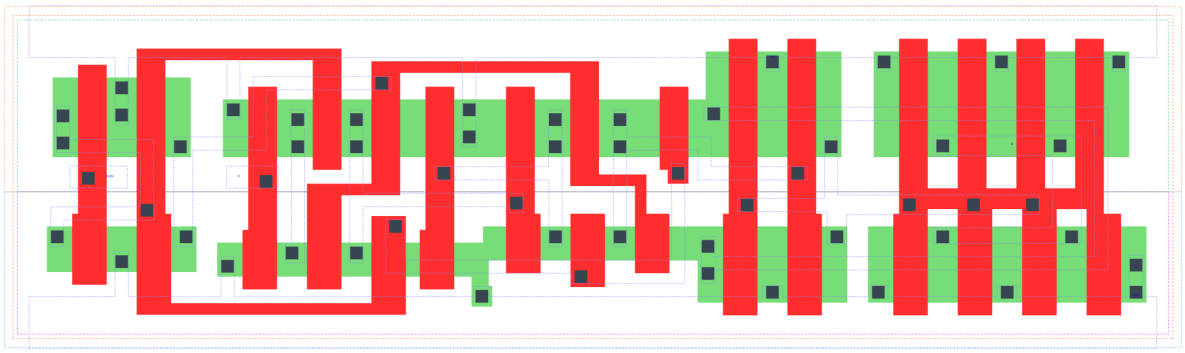

DFFNQ_X4 is a negative edge triggered D-type flip flop with 4X drive strength

Attributes

Attribute	Value
area	98.784000 μm^2

TRUTH TABLE

Input		Output
D	CLKN	Q
L	↓	L
H	↓	H

FUNCTIONAL SCHEMATIC

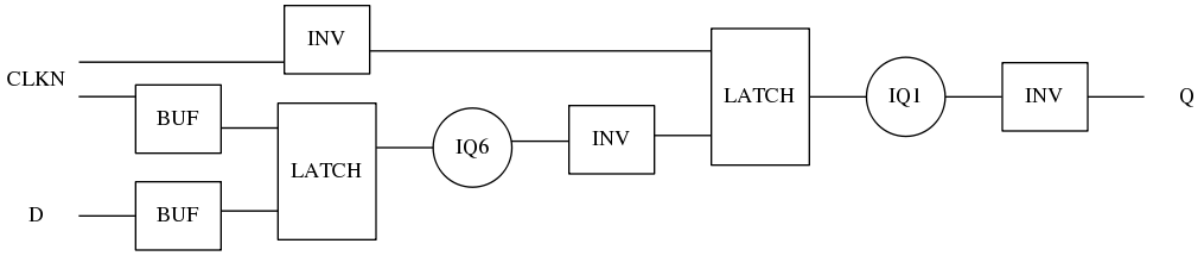

CONSTRAINTS

Constraint Pin	Related Pin	setup(ns)	hold(ns)
D(HL)	CLKN(HL)	0.2060	0.0290
D(LH)	CLKN(HL)	0.1430	0.1090

Constraint Pin	Related Pin	Minimum Pulse Width(ns)
CLKN(LHL)	CLKN(LH)	0.3150
CLKN(LHL)	CLKN(LH)	0.2900
CLKN(HLH)	CLKN(HL)	0.3980
CLKN(HLH)	CLKN(HL)	0.4370

PIN CAPACITANCE (pf)

Pin	Type	Capacitance (pf)
CLKN	input	0.0050
D	input	0.0038

DELAY AND OUTPUT TRANSITION TIME corresponding to min slew and load

Input Pin	Output	When Condition	Tin (ns)	Out Load (pf)	Delay (ns)	Tout (ns)
CLKN(HL)	Q(LH)	D	0.0100	0.0010	0.6450	0.0357
CLKN(HL)	Q(HL)	!D	0.0100	0.0010	0.5884	0.0415

DYNAMIC ENERGY

Input Pin	When Condition	Tin (ns)	Output	Out Load (pf)	Energy (uW/MHz)
CLKN	D	0.0100	Q(LH)	0.0010	1.7233
CLKN	!D	0.0100	Q(HL)	0.0010	1.7311
D(LH)	!CLKN	0.0100	n/a	n/a	0.0084
D(LH)	CLKN	0.0100	n/a	n/a	0.1962
CLKN(LH)	!D	0.0100	n/a	n/a	0.2588
CLKN(LH)	D	0.0100	n/a	n/a	0.2582
CLKN(HL)	!D	0.0100	n/a	n/a	0.4076
CLKN(HL)	D	0.0100	n/a	n/a	0.4085
D(HL)	!CLKN	0.0100	n/a	n/a	0.0835
D(HL)	CLKN	0.0100	n/a	n/a	0.2980

LEAKAGE POWER

When Condition	Power (nW)
!CLKN&!D	0.5727
CLKN&!D	0.4915
!CLKN&D	0.5965
CLKN&D	0.4850

gf180mcu_fd_sc_mcu9t5v0__dffnrnq_1

gf180mcu_fd_sc_mcu9t5v0__dffnrnq_1 symbol

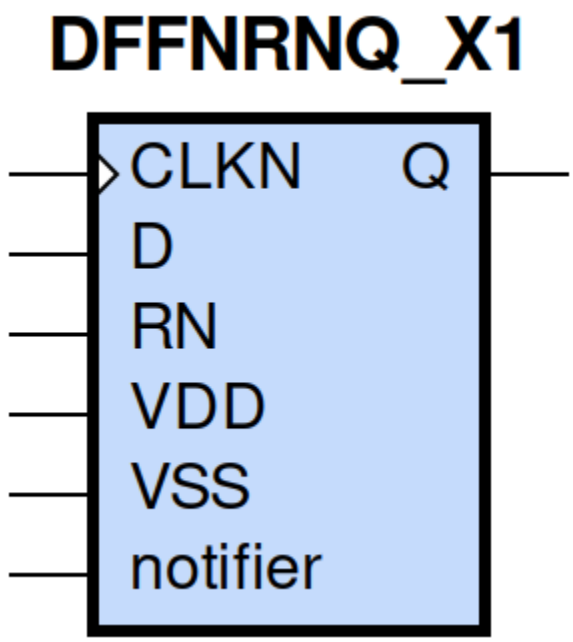

gf180mcu_fd_sc_mcu9t5v0__dffnrnq_1 schematic

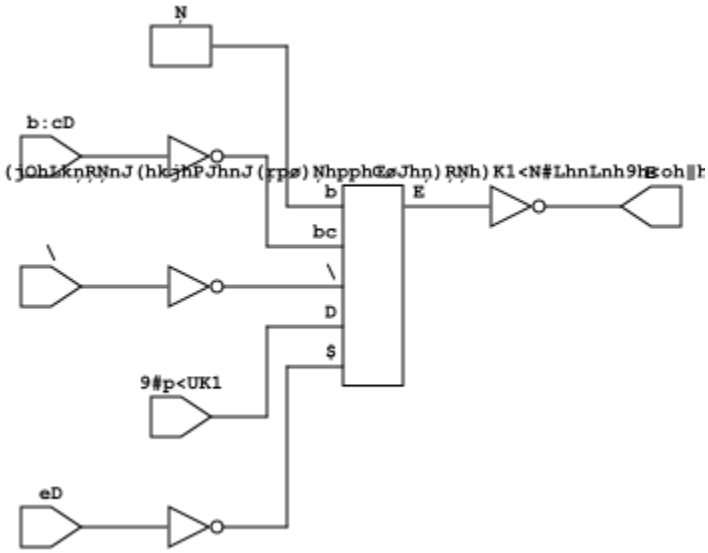

gf180mcu_fd_sc_mcu9t5v0__dffnrnq_1 layout

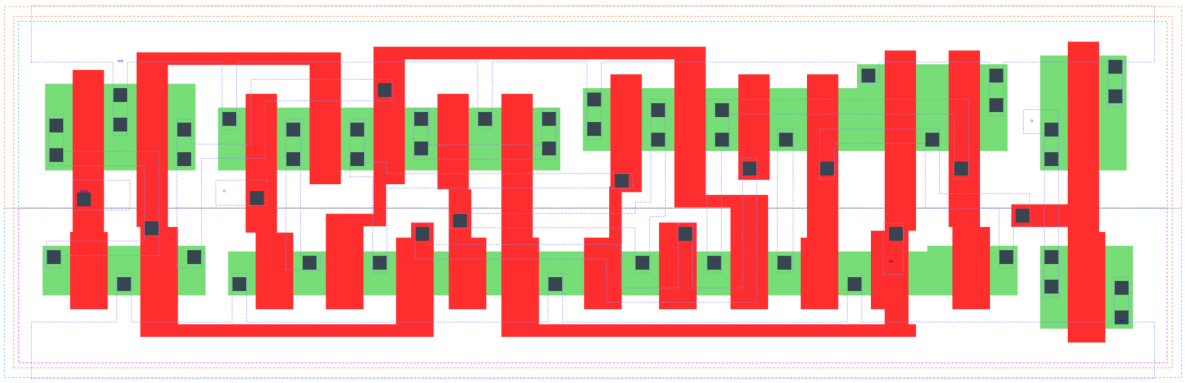

DFFNRNQ_X1 is a negative edge triggered D-type flip flop with active low reset and 1X drive strength

Attributes

Attribute	Value
area	90.316800 μm^2

TRUTH TABLE

Input			Output
RN	D	CLKN	Q
H	L	↓	L
H	H	↓	H
L	X	X	L

FUNCTIONAL SCHEMATIC

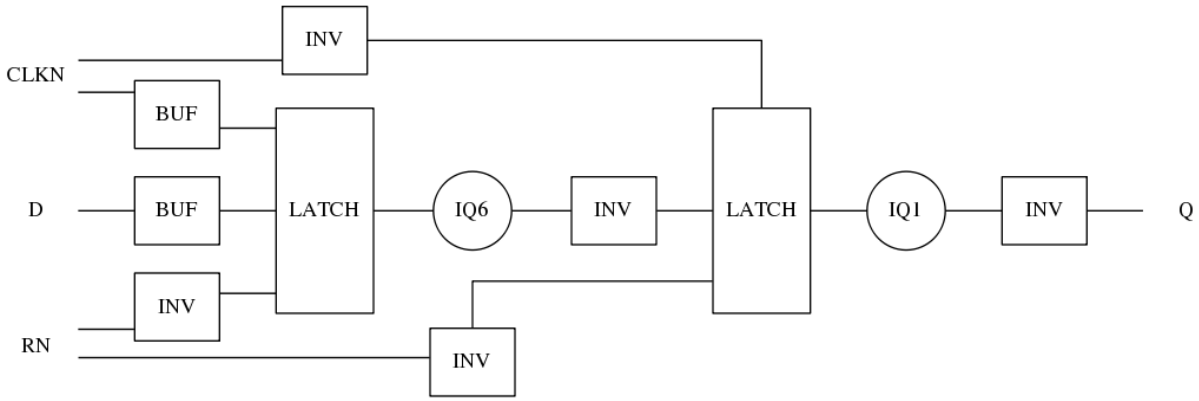

CONSTRAINTS

Constraint Pin	Related Pin	setup(ns)	hold(ns)
D(HL)	CLKN(HL)	0.2180	0.0690
D(LH)	CLKN(HL)	0.1260	0.1150

Constraint Pin	Related Pin	recovery(ns)	removal(ns)
RN(LH)	CLKN(HL)	-0.3210	0.5040

Constraint Pin	Related Pin	Minimum Pulse Width(ns)
CLKN(LHL)	CLKN(LH)	0.3450
CLKN(LHL)	CLKN(LH)	0.3020
CLKN(HLH)	CLKN(HL)	0.3000
CLKN(HLH)	CLKN(HL)	0.4170
RN(HLH)	RN(HL)	0.3680
RN(HLH)	RN(HL)	0.2610
RN(HLH)	RN(HL)	0.3680
RN(HLH)	RN(HL)	0.2610

PIN CAPACITANCE (pf)

Pin	Type	Capacitance (pf)
CLKN	input	0.0051
D	input	0.0042
RN	input	0.0089

DELAY AND OUTPUT TRANSITION TIME corresponding to min slew and load

Input Pin	Output	When Condition	Tin (ns)	Out Load (pf)	Delay (ns)	Tout (ns)
CLKN(HL)	Q(LH)	D&RN	0.0100	0.0010	0.6584	0.0465
CLKN(HL)	Q(HL)	!D&RN	0.0100	0.0010	0.4712	0.0339
RN(HL)	Q(HL)	!CLKN&!D	0.0100	0.0010	0.1762	0.0351
RN(HL)	Q(HL)	CLKN&!D	0.0100	0.0010	0.1760	0.0351
RN(HL)	Q(HL)	!CLKN&D	0.0100	0.0010	0.1763	0.0351
RN(HL)	Q(HL)	CLKN&D	0.0100	0.0010	0.1759	0.0352

DYNAMIC ENERGY

Input Pin	When Condition	Tin (ns)	Output	Out Load (pf)	Energy (uW/MHz)
RN	!CLKN&!D	0.0100	Q(HL)	0.0010	0.8676
RN	CLKN&!D	0.0100	Q(HL)	0.0010	0.5619
RN	!CLKN&D	0.0100	Q(HL)	0.0010	0.8673
RN	CLKN&D	0.0100	Q(HL)	0.0010	0.5802
CLKN	D&RN	0.0100	Q(LH)	0.0010	1.0475
CLKN	!D&RN	0.0100	Q(HL)	0.0010	0.8968
CLKN(LH)	!D&!RN	0.0100	n/a	n/a	0.2771
CLKN(LH)	D&!RN	0.0100	n/a	n/a	0.5094
CLKN(LH)	!D&RN	0.0100	n/a	n/a	0.2770
CLKN(LH)	D&RN	0.0100	n/a	n/a	0.2784
CLKN(HL)	!D&!RN	0.0100	n/a	n/a	0.4355
CLKN(HL)	D&!RN	0.0100	n/a	n/a	0.8944
CLKN(HL)	!D&RN	0.0100	n/a	n/a	0.4356
CLKN(HL)	D&RN	0.0100	n/a	n/a	0.4250
D(HL)	!CLKN&!RN	0.0100	n/a	n/a	0.0874
D(HL)	CLKN&!RN	0.0100	n/a	n/a	0.3369
D(HL)	!CLKN&RN	0.0100	n/a	n/a	0.0874
D(HL)	CLKN&RN	0.0100	n/a	n/a	0.3188
RN(HL)	!CLKN&!D	0.0100	n/a	n/a	0.0834
RN(HL)	CLKN&!D	0.0100	n/a	n/a	0.0808
RN(HL)	!CLKN&D	0.0100	n/a	n/a	0.0832
RN(HL)	CLKN&D	0.0100	n/a	n/a	0.0803
D(LH)	!CLKN&!RN	0.0100	n/a	n/a	0.0063
D(LH)	CLKN&!RN	0.0100	n/a	n/a	0.2086
D(LH)	!CLKN&RN	0.0100	n/a	n/a	0.0062

continues on next page

Table 187 – continued from previous page

D(LH)	CLKN&RN	0.0100	n/a	n/a	0.2211
RN(LH)	!CLKN&!D	0.0100	n/a	n/a	-0.0766
RN(LH)	!CLKN&D	0.0100	n/a	n/a	-0.0766
RN(LH)	CLKN&!D	0.0100	n/a	n/a	-0.0766
RN(LH)	CLKN&D	0.0100	n/a	n/a	-0.0716

LEAKAGE POWER

When Condition	Power (nW)
!CLKN&!D&!RN	0.4503
!CLKN&D&!RN	0.4530
CLKN&!D&!RN	0.4102
CLKN&D&!RN	0.4104
!CLKN&!D&RN	0.4999
CLKN&!D&RN	0.4104
CLKN&D&RN	0.5583
!CLKN&D&RN	0.6413

gf180mcu_fd_sc_mcu9t5v0__dffnrnq_2

gf180mcu_fd_sc_mcu9t5v0__dffnrnq_2 symbol

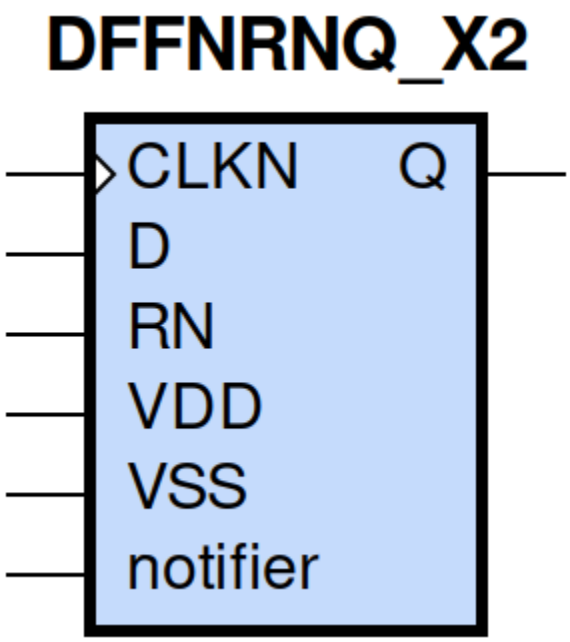

gf180mcu_fd_sc_mcu9t5v0__dffnrnq_2 schematic

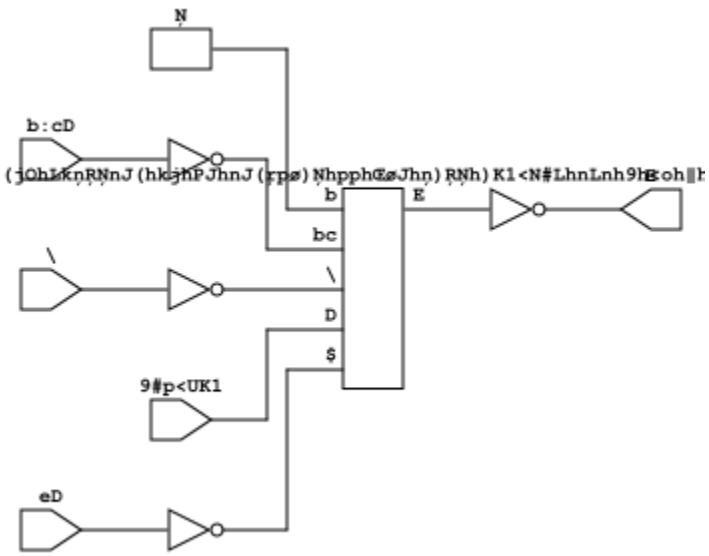

gf180mcu_fd_sc_mcu9t5v0__dffnrnq_2 layout

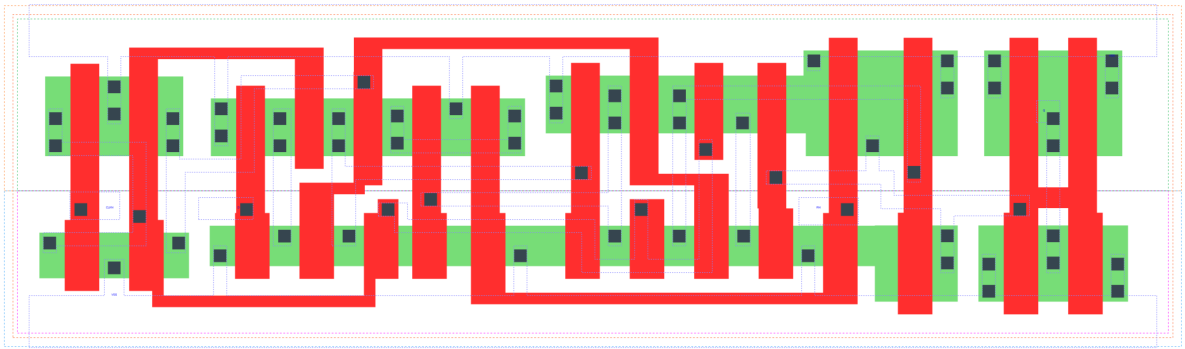

DFFNRNQ_X2 is a negative edge triggered D-type flip flop with active low reset and 2X drive strength

Attributes

Attribute	Value
area	98.784000 μm^2

TRUTH TABLE

Input			Output
RN	D	CLKN	Q
H	L	↓	L
H	H	↓	H
L	X	X	L

FUNCTIONAL SCHEMATIC

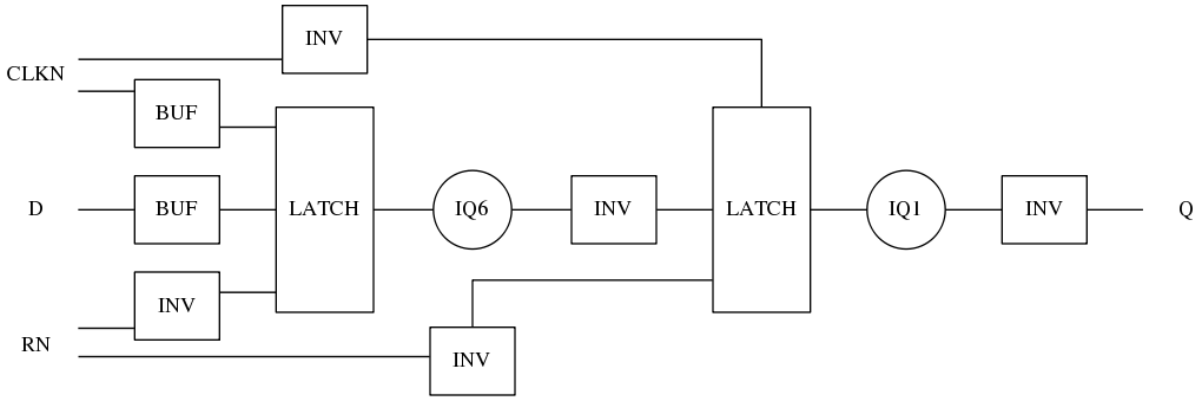

CONSTRAINTS

Constraint Pin	Related Pin	setup(ns)	hold(ns)
D(HL)	CLKN(HL)	0.2290	0.0800
D(LH)	CLKN(HL)	0.1320	0.1200

Constraint Pin	Related Pin	recovery(ns)	removal(ns)
RN(LH)	CLKN(HL)	-0.3150	0.5100

Constraint Pin	Related Pin	Minimum Pulse Width(ns)
CLKN(LHL)	CLKN(LH)	0.3570
CLKN(LHL)	CLKN(LH)	0.3150
CLKN(HLH)	CLKN(HL)	0.3290
CLKN(HLH)	CLKN(HL)	0.4460
RN(HLH)	RN(HL)	0.3780
RN(HLH)	RN(HL)	0.2410
RN(HLH)	RN(HL)	0.3780
RN(HLH)	RN(HL)	0.2410

PIN CAPACITANCE (pf)

Pin	Type	Capacitance (pf)
CLKN	input	0.0051
D	input	0.0041
RN	input	0.0099

DELAY AND OUTPUT TRANSITION TIME corresponding to min slew and load

Input Pin	Output	When Condition	Tin (ns)	Out Load (pf)	Delay (ns)	Tout (ns)
CLKN(HL)	Q(LH)	D&RN	0.0100	0.0010	0.6941	0.0418
CLKN(HL)	Q(HL)	!D&RN	0.0100	0.0010	0.4997	0.0299
RN(HL)	Q(HL)	!CLKN&!D	0.0100	0.0010	0.1782	0.0309
RN(HL)	Q(HL)	CLKN&!D	0.0100	0.0010	0.1781	0.0312
RN(HL)	Q(HL)	!CLKN&D	0.0100	0.0010	0.1782	0.0309
RN(HL)	Q(HL)	CLKN&D	0.0100	0.0010	0.1781	0.0312

DYNAMIC ENERGY

Input Pin	When Condition	Tin (ns)	Output	Out Load (pf)	Energy (uW/MHz)
RN	!CLKN&!D	0.0100	Q(HL)	0.0010	1.1194
RN	CLKN&!D	0.0100	Q(HL)	0.0010	0.8111
RN	!CLKN&D	0.0100	Q(HL)	0.0010	1.1193
RN	CLKN&D	0.0100	Q(HL)	0.0010	0.8282
CLKN	D&RN	0.0100	Q(LH)	0.0010	1.3158
CLKN	!D&RN	0.0100	Q(HL)	0.0010	1.1261
CLKN(LH)	!D&!RN	0.0100	n/a	n/a	0.2790
CLKN(LH)	D&!RN	0.0100	n/a	n/a	0.5150

continues on next page

Table 188 – continued from previous page

CLKN(LH)	!D&RN	0.0100	n/a	n/a	0.2789
CLKN(LH)	D&RN	0.0100	n/a	n/a	0.2803
CLKN(HL)	!D&!RN	0.0100	n/a	n/a	0.4374
CLKN(HL)	D&!RN	0.0100	n/a	n/a	0.9097
CLKN(HL)	!D&RN	0.0100	n/a	n/a	0.4373
CLKN(HL)	D&RN	0.0100	n/a	n/a	0.4271
D(HL)	!CLKN&!RN	0.0100	n/a	n/a	0.0883
D(HL)	CLKN&!RN	0.0100	n/a	n/a	0.3409
D(HL)	!CLKN&RN	0.0100	n/a	n/a	0.0883
D(HL)	CLKN&RN	0.0100	n/a	n/a	0.3233
RN(HL)	!CLKN&!D	0.0100	n/a	n/a	0.0989
RN(HL)	CLKN&!D	0.0100	n/a	n/a	0.0963
RN(HL)	!CLKN&D	0.0100	n/a	n/a	0.0987
RN(HL)	CLKN&D	0.0100	n/a	n/a	0.0960
D(LH)	!CLKN&!RN	0.0100	n/a	n/a	0.0062
D(LH)	CLKN&!RN	0.0100	n/a	n/a	0.2118
D(LH)	!CLKN&RN	0.0100	n/a	n/a	0.0063
D(LH)	CLKN&RN	0.0100	n/a	n/a	0.2236
RN(LH)	!CLKN&!D	0.0100	n/a	n/a	-0.0916
RN(LH)	!CLKN&D	0.0100	n/a	n/a	-0.0916
RN(LH)	CLKN&!D	0.0100	n/a	n/a	-0.0916
RN(LH)	CLKN&D	0.0100	n/a	n/a	-0.0867

LEAKAGE POWER

When Condition	Power (nW)
!CLKN&!D&!RN	0.4771
!CLKN&D&!RN	0.4799
CLKN&!D&!RN	0.4371
CLKN&D&!RN	0.4373
!CLKN&!D&RN	0.5264
CLKN&!D&RN	0.4374
CLKN&D&RN	0.5882
!CLKN&D&RN	0.6669

gf180mcu_fd_sc_mcu9t5v0__dffnrnq_4

gf180mcu_fd_sc_mcu9t5v0__dffnrnq_4 symbol

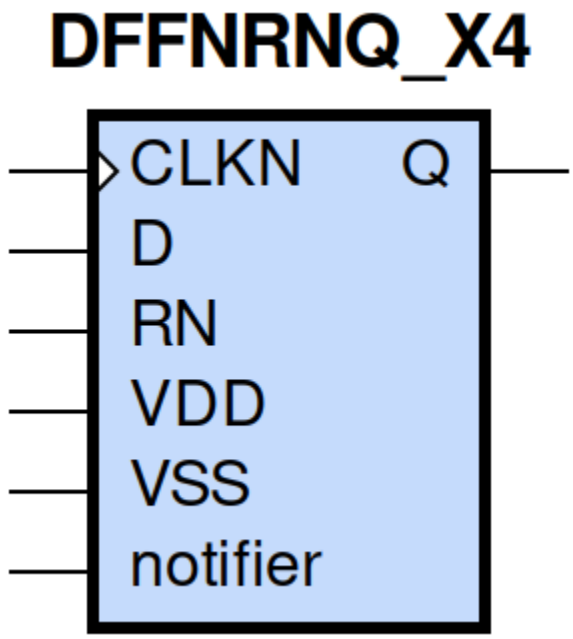

gf180mcu_fd_sc_mcu9t5v0__dffnrnq_4 schematic

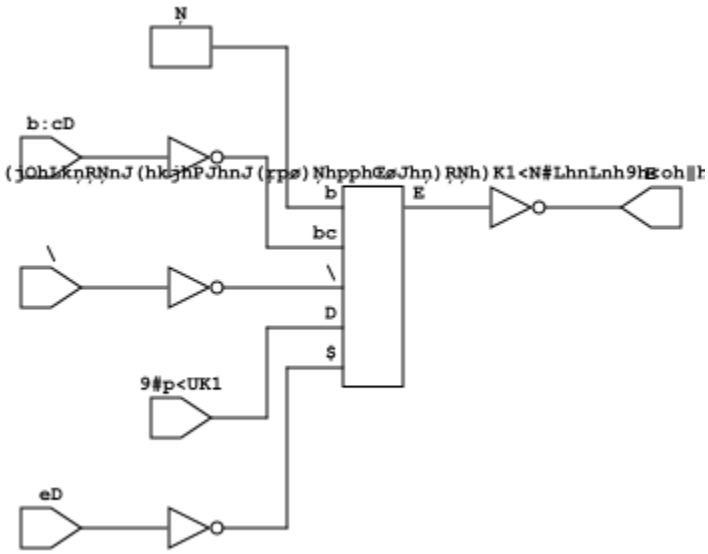

gf180mcu_fd_sc_mcu9t5v0__dffnrnq_4 layout

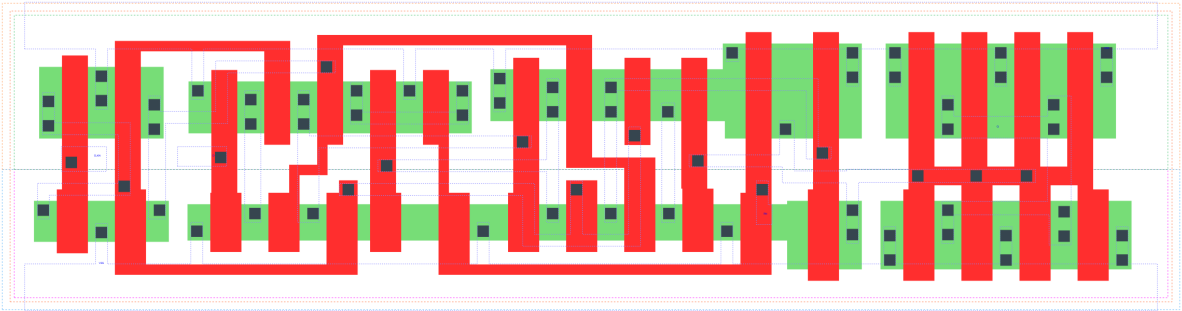

DFFNRNQ_X4 is a negative edge triggered D-type flip flop with active low reset and 4X drive strength

Attributes

Attribute	Value
area	110.073600 μm^2

TRUTH TABLE

Input			Output
RN	D	CLKN	Q
H	L	↓	L
H	H	↓	H
L	X	X	L

FUNCTIONAL SCHEMATIC

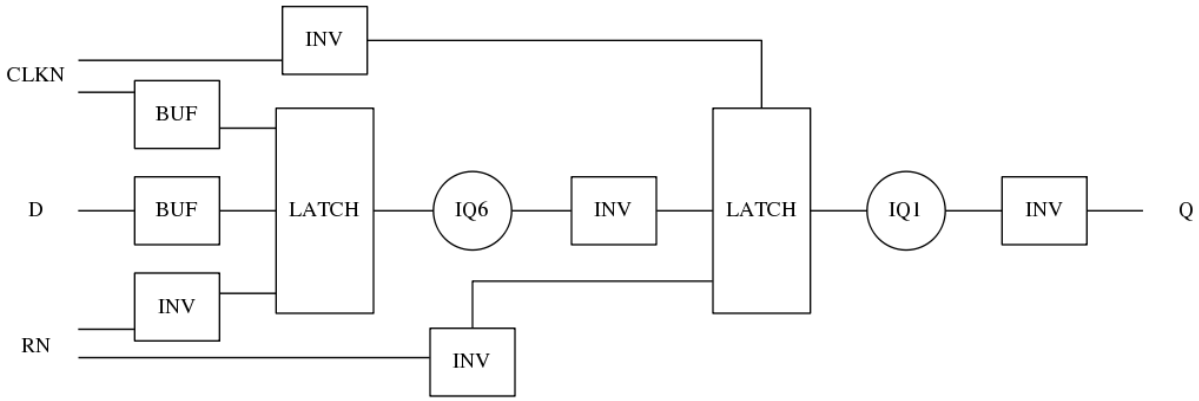

CONSTRAINTS

Constraint Pin	Related Pin	setup(ns)	hold(ns)
D(HL)	CLKN(HL)	0.2290	0.0690
D(LH)	CLKN(HL)	0.1320	0.1200

Constraint Pin	Related Pin	recovery(ns)	removal(ns)
RN(LH)	CLKN(HL)	-0.3150	0.5100

Constraint Pin	Related Pin	Minimum Pulse Width(ns)
CLKN(LHL)	CLKN(LH)	0.3570
CLKN(LHL)	CLKN(LH)	0.3080
CLKN(HLH)	CLKN(HL)	0.3580
CLKN(HLH)	CLKN(HL)	0.5340
RN(HLH)	RN(HL)	0.3880
RN(HLH)	RN(HL)	0.3100
RN(HLH)	RN(HL)	0.3880
RN(HLH)	RN(HL)	0.3100

PIN CAPACITANCE (pf)

Pin	Type	Capacitance (pf)
CLKN	input	0.0051
D	input	0.0041
RN	input	0.0096

DELAY AND OUTPUT TRANSITION TIME corresponding to min slew and load

Input Pin	Output	When Condition	Tin (ns)	Out Load (pf)	Delay (ns)	Tout (ns)
CLKN(HL)	Q(LH)	D&RN	0.0100	0.0010	0.8102	0.0535
CLKN(HL)	Q(HL)	!D&RN	0.0100	0.0010	0.5681	0.0405
RN(HL)	Q(HL)	!CLKN&!D	0.0100	0.0010	0.2430	0.0420
RN(HL)	Q(HL)	CLKN&!D	0.0100	0.0010	0.2433	0.0422
RN(HL)	Q(HL)	!CLKN&D	0.0100	0.0010	0.2430	0.0420
RN(HL)	Q(HL)	CLKN&D	0.0100	0.0010	0.2433	0.0423

DYNAMIC ENERGY

Input Pin	When Condition	Tin (ns)	Output	Out Load (pf)	Energy (uW/MHz)
RN	!CLKN&!D	0.0100	Q(HL)	0.0010	1.6775
RN	CLKN&!D	0.0100	Q(HL)	0.0010	1.3491
RN	!CLKN&D	0.0100	Q(HL)	0.0010	1.6775
RN	CLKN&D	0.0100	Q(HL)	0.0010	1.3668
CLKN	D&RN	0.0100	Q(LH)	0.0010	1.9663
CLKN	!D&RN	0.0100	Q(HL)	0.0010	1.6596
CLKN(LH)	!D&!RN	0.0100	n/a	n/a	0.2750
CLKN(LH)	D&!RN	0.0100	n/a	n/a	0.5120
CLKN(LH)	!D&RN	0.0100	n/a	n/a	0.2747
CLKN(LH)	D&RN	0.0100	n/a	n/a	0.2765
CLKN(HL)	!D&!RN	0.0100	n/a	n/a	0.4384
CLKN(HL)	D&!RN	0.0100	n/a	n/a	0.9146
CLKN(HL)	!D&RN	0.0100	n/a	n/a	0.4384
CLKN(HL)	D&RN	0.0100	n/a	n/a	0.4279
D(HL)	!CLKN&!RN	0.0100	n/a	n/a	0.0884
D(HL)	CLKN&!RN	0.0100	n/a	n/a	0.3416
D(HL)	!CLKN&RN	0.0100	n/a	n/a	0.0884
D(HL)	CLKN&RN	0.0100	n/a	n/a	0.3246
RN(HL)	!CLKN&!D	0.0100	n/a	n/a	0.0991
RN(HL)	CLKN&!D	0.0100	n/a	n/a	0.0963
RN(HL)	!CLKN&D	0.0100	n/a	n/a	0.0988
RN(HL)	CLKN&D	0.0100	n/a	n/a	0.0958
D(LH)	!CLKN&!RN	0.0100	n/a	n/a	0.0062
D(LH)	CLKN&!RN	0.0100	n/a	n/a	0.2130
D(LH)	!CLKN&RN	0.0100	n/a	n/a	0.0063

continues on next page

Table 189 – continued from previous page

D(LH)	CLKN&RN	0.0100	n/a	n/a	0.2243
RN(LH)	!CLKN&!D	0.0100	n/a	n/a	-0.0917
RN(LH)	!CLKN&D	0.0100	n/a	n/a	-0.0917
RN(LH)	CLKN&!D	0.0100	n/a	n/a	-0.0916
RN(LH)	CLKN&D	0.0100	n/a	n/a	-0.0866

LEAKAGE POWER

When Condition	Power (nW)
!CLKN&!D&!RN	0.5308
!CLKN&D&!RN	0.5336
CLKN&!D&!RN	0.4908
CLKN&D&!RN	0.4910
!CLKN&!D&RN	0.5802
CLKN&!D&RN	0.4911
CLKN&D&RN	0.6394
!CLKN&D&RN	0.7185

gf180mcu_fd_sc_mcu9t5v0__dffnrsnq_1

gf180mcu_fd_sc_mcu9t5v0__dffnrsnq_1 symbol

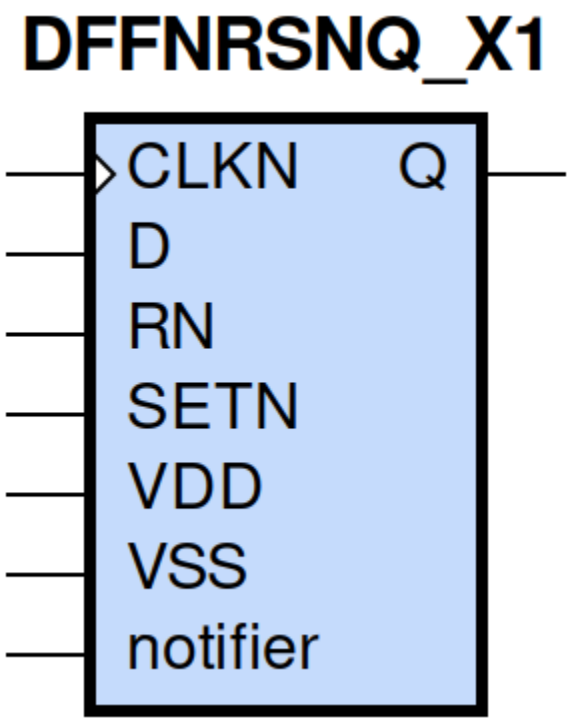

gf180mcu_fd_sc_mcu9t5v0__dffnrsnq_1 schematic

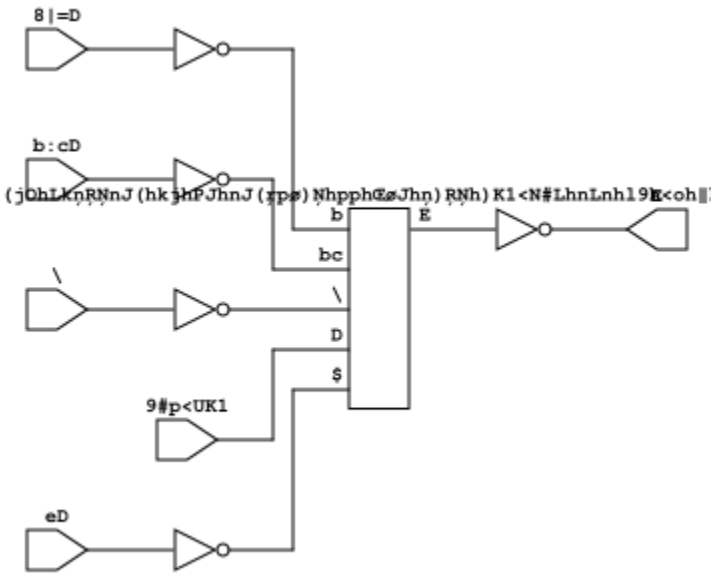

gf180mcu_fd_sc_mcu9t5v0__dffnrsnq_1 layout

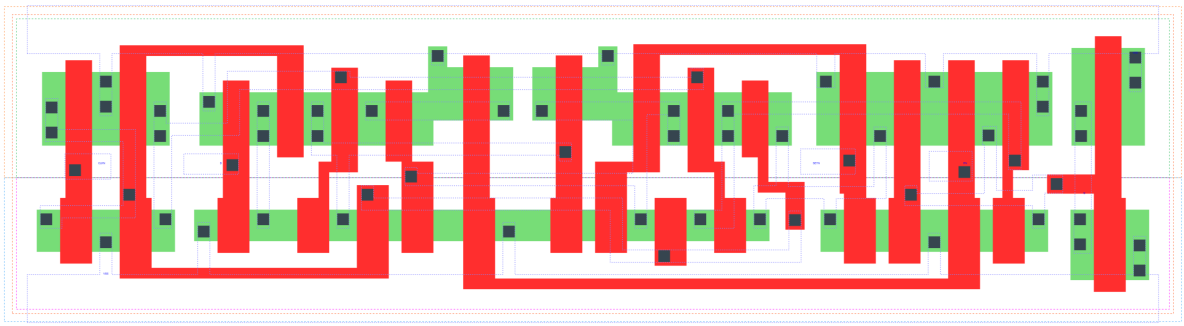

DFFNRSNQ_X1 is a negative edge triggered D-type flip flop with active low set/reset and 1X drive strength

Attributes

Attribute	Value
area	107.251200 μm^2

TRUTH TABLE

Input				Output
RN	SETN	D	CLKN	Q
H	H	L	↓	L
H	H	H	↓	H
L	H	X	X	L
H	L	X	X	H
L	L	X	X	L

FUNCTIONAL SCHEMATIC

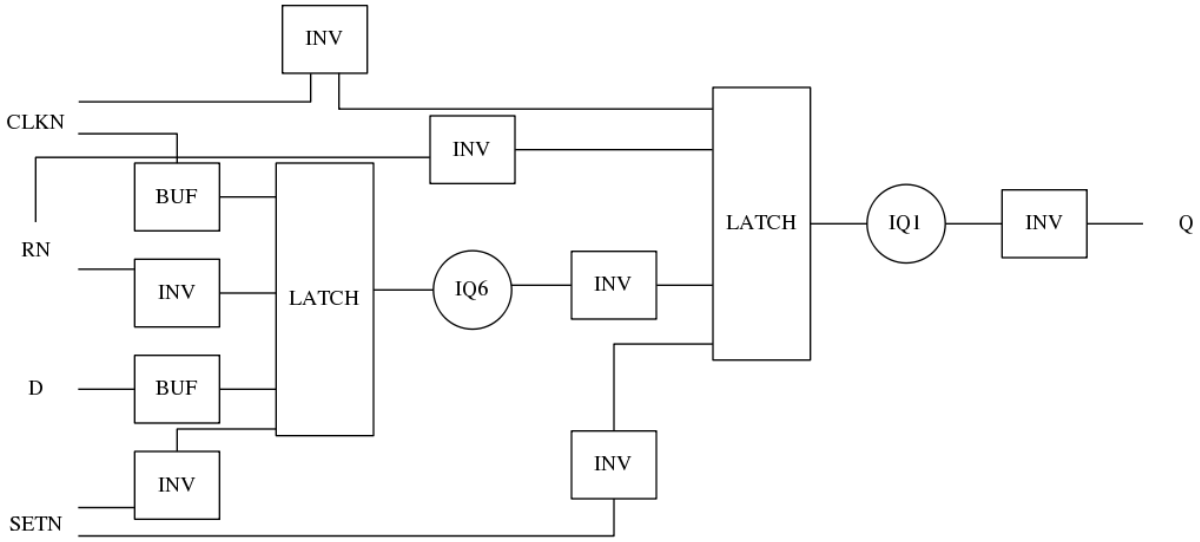

CONSTRAINTS

Constraint Pin	Related Pin	setup(ns)	hold(ns)
D(HL)	CLKN(HL)	0.3090	0.0570
D(LH)	CLKN(HL)	0.1890	0.1090
SETN(LH)	RN(LH)	-0.0340	0.0970
SETN(LH)	RN(LH)	-0.0110	0.0740
SETN(LH)	RN(LH)	-0.0340	0.0970
SETN(LH)	RN(LH)	-0.0110	0.0740
RN(LH)	SETN(LH)	0.0970	-0.0340
RN(LH)	SETN(LH)	0.0740	-0.0110
RN(LH)	SETN(LH)	0.0970	-0.0340
RN(LH)	SETN(LH)	0.0740	-0.0110

Constraint Pin	Related Pin	recovery(ns)	removal(ns)
SETN(LH)	CLKN(HL)	0.1090	0.1490
RN(LH)	CLKN(HL)	-0.3260	0.5270

Constraint Pin	Related Pin	Minimum Pulse Width(ns)
CLKN(LHL)	CLKN(LH)	0.4430
CLKN(LHL)	CLKN(LH)	0.3690
CLKN(HLH)	CLKN(HL)	0.3780
CLKN(HLH)	CLKN(HL)	0.4170
SETN(HLH)	SETN(HL)	0.3880
SETN(HLH)	SETN(HL)	0.3100
SETN(HLH)	SETN(HL)	0.3880
SETN(HLH)	SETN(HL)	0.3000
RN(HLH)	RN(HL)	0.3880
RN(HLH)	RN(HL)	0.2800
RN(HLH)	RN(HL)	0.3880
RN(HLH)	RN(HL)	0.2800

PIN CAPACITANCE (pf)

Pin	Type	Capacitance (pf)
CLKN	input	0.0051
D	input	0.0039
SETN	input	0.0096
RN	input	0.0099

DELAY AND OUTPUT TRANSITION TIME corresponding to min slew and load

Input Pin	Output	When Condition	Tin (ns)	Out Load (pf)	Delay (ns)	Tout (ns)
CLKN(HL)	Q(LH)	D&RN&SETN	0.0100	0.0010	0.6554	0.0456
CLKN(HL)	Q(HL)	!D&RN&SETN	0.0100	0.0010	0.5380	0.0372
SETN(HL)	Q(LH)	!CLKN&!D&RN	0.0100	0.0010	0.5526	0.0451
SETN(HL)	Q(LH)	CLKN&!D&RN	0.0100	0.0010	0.4554	0.0443
SETN(HL)	Q(LH)	!CLKN&D&RN	0.0100	0.0010	0.5526	0.0448
SETN(HL)	Q(LH)	CLKN&D&RN	0.0100	0.0010	0.4555	0.0446
RN(HL)	Q(HL)	!CLKN&!D&SETN	0.0100	0.0010	0.1792	0.0355
RN(HL)	Q(HL)	CLKN&!D&SETN	0.0100	0.0010	0.1790	0.0356
RN(HL)	Q(HL)	!CLKN&D&SETN	0.0100	0.0010	0.1791	0.0354
RN(HL)	Q(HL)	CLKN&D&SETN	0.0100	0.0010	0.1790	0.0355
RN(HL)	Q(HL)	!CLKN&!D&!SETN	0.0100	0.0010	0.1791	0.0350
RN(HL)	Q(HL)	!CLKN&D&!SETN	0.0100	0.0010	0.1791	0.0350
RN(HL)	Q(HL)	CLKN&!D&!SETN	0.0100	0.0010	0.1787	0.0349
RN(HL)	Q(HL)	CLKN&D&!SETN	0.0100	0.0010	0.1788	0.0349
RN(LH)	Q(LH)	!CLKN&!D&!SETN	0.0100	0.0010	0.2489	0.0434
RN(LH)	Q(LH)	!CLKN&D&!SETN	0.0100	0.0010	0.2489	0.0434
RN(LH)	Q(LH)	CLKN&!D&!SETN	0.0100	0.0010	0.2464	0.0434
RN(LH)	Q(LH)	CLKN&D&!SETN	0.0100	0.0010	0.2464	0.0434

DYNAMIC ENERGY

Input Pin	When Condition	Tin (ns)	Output	Out Load (pf)	Energy (uW/MHz)
SETN	!CLKN&!D&RN	0.0100	Q(LH)	0.0010	0.8975
SETN	CLKN&!D&RN	0.0100	Q(LH)	0.0010	0.7472
SETN	!CLKN&D&RN	0.0100	Q(LH)	0.0010	0.8974
SETN	CLKN&D&RN	0.0100	Q(LH)	0.0010	0.6115
RN	!CLKN&!D&SETN	0.0100	Q(HL)	0.0010	0.8771
RN	CLKN&!D&SETN	0.0100	Q(HL)	0.0010	0.5828
RN	!CLKN&D&SETN	0.0100	Q(HL)	0.0010	0.8764
RN	CLKN&D&SETN	0.0100	Q(HL)	0.0010	0.5832
RN	!CLKN&!D&!SETN	0.0100	Q(HL)	0.0010	0.5614
RN	!CLKN&D&!SETN	0.0100	Q(HL)	0.0010	0.5614
RN	CLKN&!D&!SETN	0.0100	Q(HL)	0.0010	0.3843
RN	CLKN&D&!SETN	0.0100	Q(HL)	0.0010	0.3821
RN	!CLKN&!D&!SETN	0.0100	Q(LH)	0.0010	0.3626
RN	!CLKN&D&!SETN	0.0100	Q(LH)	0.0010	0.3626
RN	CLKN&!D&!SETN	0.0100	Q(LH)	0.0010	0.2217
RN	CLKN&D&!SETN	0.0100	Q(LH)	0.0010	0.2240
CLKN	D&RN&SETN	0.0100	Q(LH)	0.0010	1.1160
CLKN	!D&RN&SETN	0.0100	Q(HL)	0.0010	0.9551
SETN(HL)	!CLKN&!D&!RN	0.0100	n/a	n/a	0.4287
SETN(HL)	!CLKN&D&!RN	0.0100	n/a	n/a	0.4287
SETN(HL)	CLKN&!D&!RN	0.0100	n/a	n/a	0.4264
SETN(HL)	CLKN&D&!RN	0.0100	n/a	n/a	0.3003
SETN(HL)	!CLKN&!D&RN	0.0100	n/a	n/a	0.0845
SETN(HL)	CLKN&!D&RN	0.0100	n/a	n/a	0.2200

continues on next page

Table 190 – continued from previous page

SETN(HL)	!CLKN&D&RN	0.0100	n/a	n/a	0.0845
SETN(HL)	CLKN&D&RN	0.0100	n/a	n/a	0.0844
CLKN(LH)	!D&!RN&!SETN	0.0100	n/a	n/a	0.2901
CLKN(LH)	!D&!RN&SETN	0.0100	n/a	n/a	0.2845
CLKN(LH)	D&!RN&!SETN	0.0100	n/a	n/a	0.3963
CLKN(LH)	D&!RN&SETN	0.0100	n/a	n/a	0.5552
CLKN(LH)	!D&RN&!SETN	0.0100	n/a	n/a	0.4073
CLKN(LH)	D&RN&!SETN	0.0100	n/a	n/a	0.2856
CLKN(LH)	!D&RN&SETN	0.0100	n/a	n/a	0.2842
CLKN(LH)	D&RN&SETN	0.0100	n/a	n/a	0.2852
CLKN(HL)	!D&!RN&!SETN	0.0100	n/a	n/a	0.4665
CLKN(HL)	!D&!RN&SETN	0.0100	n/a	n/a	0.4449
CLKN(HL)	D&!RN&!SETN	0.0100	n/a	n/a	0.5947
CLKN(HL)	D&!RN&SETN	0.0100	n/a	n/a	0.8759
CLKN(HL)	!D&RN&!SETN	0.0100	n/a	n/a	0.5448
CLKN(HL)	D&RN&!SETN	0.0100	n/a	n/a	0.4652
CLKN(HL)	!D&RN&SETN	0.0100	n/a	n/a	0.4449
CLKN(HL)	D&RN&SETN	0.0100	n/a	n/a	0.4652
D(HL)	!CLKN&!RN&!SETN	0.0100	n/a	n/a	0.0893
D(HL)	!CLKN&!RN&SETN	0.0100	n/a	n/a	0.0893
D(HL)	CLKN&!RN&!SETN	0.0100	n/a	n/a	0.2157
D(HL)	CLKN&!RN&SETN	0.0100	n/a	n/a	0.3328
D(HL)	!CLKN&RN&!SETN	0.0100	n/a	n/a	0.0893
D(HL)	CLKN&RN&!SETN	0.0100	n/a	n/a	0.2157
D(HL)	!CLKN&RN&SETN	0.0100	n/a	n/a	0.0893
D(HL)	CLKN&RN&SETN	0.0100	n/a	n/a	0.3198
RN(HL)	!CLKN&!D&SETN	0.0100	n/a	n/a	0.0831
RN(HL)	CLKN&!D&SETN	0.0100	n/a	n/a	0.0808
RN(HL)	!CLKN&D&SETN	0.0100	n/a	n/a	0.0829
RN(HL)	CLKN&D&SETN	0.0100	n/a	n/a	0.0800
D(LH)	!CLKN&!RN&!SETN	0.0100	n/a	n/a	0.0063
D(LH)	!CLKN&!RN&SETN	0.0100	n/a	n/a	0.0063
D(LH)	CLKN&!RN&!SETN	0.0100	n/a	n/a	0.0847
D(LH)	CLKN&!RN&SETN	0.0100	n/a	n/a	0.2464
D(LH)	!CLKN&RN&!SETN	0.0100	n/a	n/a	0.0064
D(LH)	CLKN&RN&!SETN	0.0100	n/a	n/a	0.0847
D(LH)	!CLKN&RN&SETN	0.0100	n/a	n/a	0.0063
D(LH)	CLKN&RN&SETN	0.0100	n/a	n/a	0.2558
RN(LH)	!CLKN&!D&SETN	0.0100	n/a	n/a	-0.0766
RN(LH)	!CLKN&D&SETN	0.0100	n/a	n/a	-0.0766
RN(LH)	CLKN&!D&SETN	0.0100	n/a	n/a	-0.0766
RN(LH)	CLKN&D&SETN	0.0100	n/a	n/a	-0.0716
SETN(LH)	!CLKN&!D&!RN	0.0100	n/a	n/a	0.1882
SETN(LH)	!CLKN&D&!RN	0.0100	n/a	n/a	0.1882
SETN(LH)	CLKN&!D&!RN	0.0100	n/a	n/a	0.1977
SETN(LH)	CLKN&D&!RN	0.0100	n/a	n/a	0.0989
SETN(LH)	!CLKN&!D&RN	0.0100	n/a	n/a	-0.0613
SETN(LH)	!CLKN&D&RN	0.0100	n/a	n/a	-0.0613
SETN(LH)	CLKN&!D&RN	0.0100	n/a	n/a	0.0253
SETN(LH)	CLKN&D&RN	0.0100	n/a	n/a	-0.0613

LEAKAGE POWER

When Condition	Power (nW)
!CLKN&!D&!RN&!SETN	0.5255
!CLKN&!D&!RN&SETN	0.5036
!CLKN&D&!RN&!SETN	0.5282
!CLKN&D&!RN&SETN	0.5063
CLKN&!D&!RN&!SETN	0.4459
CLKN&!D&!RN&SETN	0.4634
CLKN&D&!RN&!SETN	0.4477
CLKN&D&!RN&SETN	0.4774
!CLKN&D&RN&SETN	0.8012
!CLKN&!D&RN&!SETN	0.4895
!CLKN&D&RN&!SETN	0.4913
CLKN&!D&RN&!SETN	0.4324
CLKN&D&RN&!SETN	0.4340
!CLKN&!D&RN&SETN	0.5445
CLKN&!D&RN&SETN	0.6847
CLKN&D&RN&SETN	0.6512

gf180mcu_fd_sc_mcu9t5v0__dffnrsnq_2

gf180mcu_fd_sc_mcu9t5v0__dffnrsnq_2 symbol

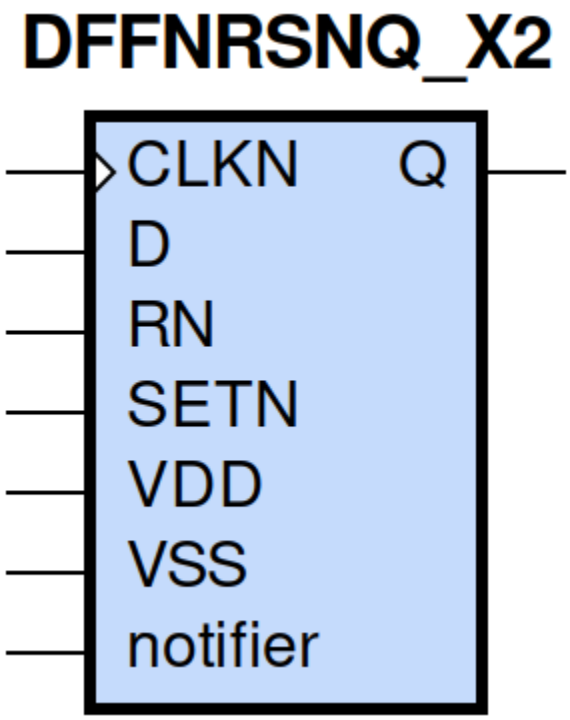

gf180mcu_fd_sc_mcu9t5v0__dffnrsnq_2 schematic

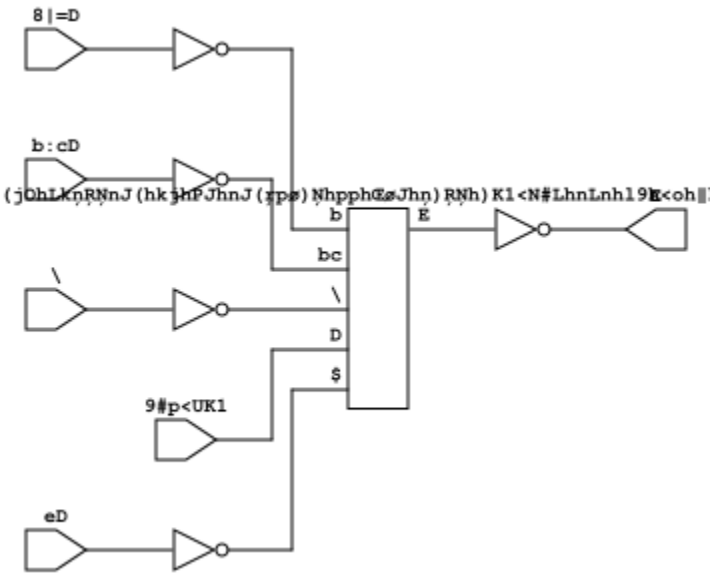

gf180mcu_fd_sc_mcu9t5v0__dffnrsnq_2 layout

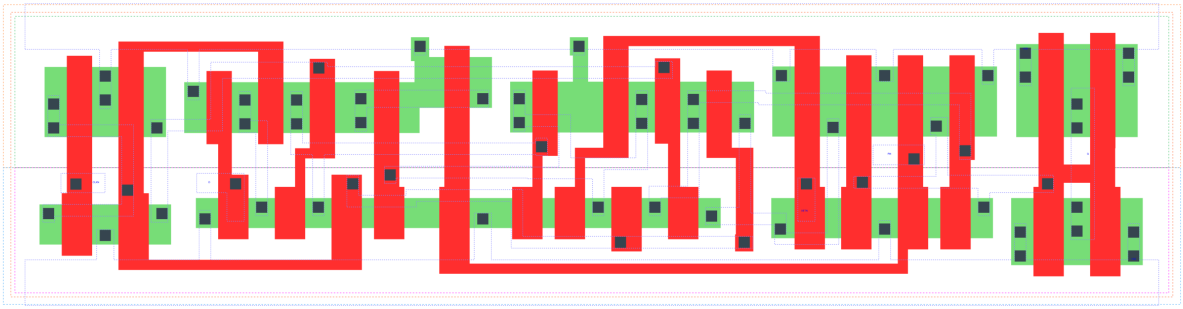

DFFNRSNQ_X2 is a negative edge triggered D-type flip flop with active low set/reset and 2X drive strength

Attributes

Attribute	Value
area	112.896000 μm^2

TRUTH TABLE

Input				Output
RN	SETN	D	CLKN	Q
H	H	L	↓	L
H	H	H	↓	H
L	H	X	X	L
H	L	X	X	H
L	L	X	X	L

FUNCTIONAL SCHEMATIC

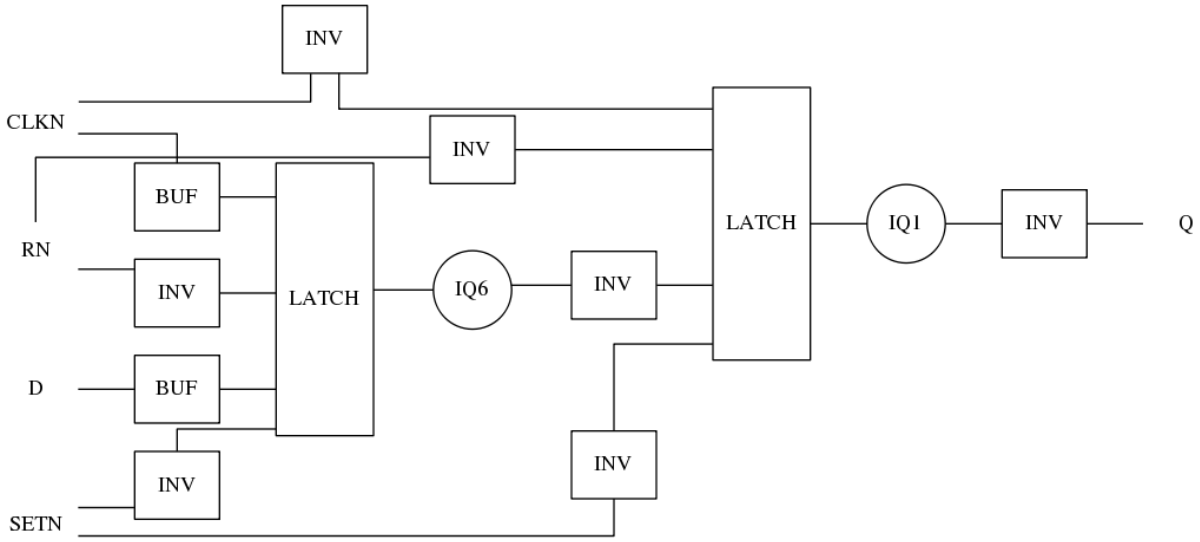

CONSTRAINTS

Constraint Pin	Related Pin	setup(ns)	hold(ns)
D(HL)	CLKN(HL)	0.3150	0.0690
D(LH)	CLKN(HL)	0.1950	0.1090
SETN(LH)	RN(LH)	-0.0460	0.1260
SETN(LH)	RN(LH)	-0.0460	0.1260
SETN(LH)	RN(LH)	-0.0460	0.1260
SETN(LH)	RN(LH)	-0.0460	0.1260
RN(LH)	SETN(LH)	0.1260	-0.0460
RN(LH)	SETN(LH)	0.1260	-0.0460
RN(LH)	SETN(LH)	0.1260	-0.0460
RN(LH)	SETN(LH)	0.1260	-0.0460

Constraint Pin	Related Pin	recovery(ns)	removal(ns)
SETN(LH)	CLKN(HL)	0.1090	0.1490
RN(LH)	CLKN(HL)	-0.3150	0.5270

Constraint Pin	Related Pin	Minimum Pulse Width(ns)
CLKN(LHL)	CLKN(LH)	0.4490
CLKN(LHL)	CLKN(LH)	0.3760
CLKN(HLH)	CLKN(HL)	0.4070
CLKN(HLH)	CLKN(HL)	0.4760
SETN(HLH)	SETN(HL)	0.4070
SETN(HLH)	SETN(HL)	0.3490
SETN(HLH)	SETN(HL)	0.4070
SETN(HLH)	SETN(HL)	0.3490
RN(HLH)	RN(HL)	0.3980
RN(HLH)	RN(HL)	0.2800
RN(HLH)	RN(HL)	0.3980
RN(HLH)	RN(HL)	0.2800

PIN CAPACITANCE (pf)

Pin	Type	Capacitance (pf)
CLKN	input	0.0050
D	input	0.0040
SETN	input	0.0094
RN	input	0.0100

DELAY AND OUTPUT TRANSITION TIME corresponding to min slew and load

Input Pin	Output	When Condition	Tin (ns)	Out Load (pf)	Delay (ns)	Tout (ns)
CLKN(HL)	Q(LH)	D&RN&SETN	0.0100	0.0010	0.7067	0.0433
CLKN(HL)	Q(HL)	!D&RN&SETN	0.0100	0.0010	0.5712	0.0378
SETN(HL)	Q(LH)	!CLKN&!D&RN	0.0100	0.0010	0.6039	0.0426
SETN(HL)	Q(LH)	CLKN&!D&RN	0.0100	0.0010	0.5091	0.0422
SETN(HL)	Q(LH)	!CLKN&D&RN	0.0100	0.0010	0.6041	0.0427
SETN(HL)	Q(LH)	CLKN&D&RN	0.0100	0.0010	0.5094	0.0422
RN(HL)	Q(HL)	!CLKN&!D&SETN	0.0100	0.0010	0.2072	0.0360
RN(HL)	Q(HL)	CLKN&!D&SETN	0.0100	0.0010	0.2070	0.0363
RN(HL)	Q(HL)	!CLKN&D&SETN	0.0100	0.0010	0.2071	0.0361
RN(HL)	Q(HL)	CLKN&D&SETN	0.0100	0.0010	0.2071	0.0363
RN(HL)	Q(HL)	!CLKN&!D&!SETN	0.0100	0.0010	0.2070	0.0356
RN(HL)	Q(HL)	!CLKN&D&!SETN	0.0100	0.0010	0.2070	0.0356
RN(HL)	Q(HL)	CLKN&!D&!SETN	0.0100	0.0010	0.2069	0.0355
RN(HL)	Q(HL)	CLKN&D&!SETN	0.0100	0.0010	0.2069	0.0355
RN(LH)	Q(LH)	!CLKN&!D&!SETN	0.0100	0.0010	0.2973	0.0416
RN(LH)	Q(LH)	!CLKN&D&!SETN	0.0100	0.0010	0.2973	0.0416
RN(LH)	Q(LH)	CLKN&!D&!SETN	0.0100	0.0010	0.2941	0.0416
RN(LH)	Q(LH)	CLKN&D&!SETN	0.0100	0.0010	0.2939	0.0415

DYNAMIC ENERGY

Input Pin	When Condition	Tin (ns)	Output	Out Load (pf)	Energy (uW/MHz)
SETN	!CLKN&!D&RN	0.0100	Q(LH)	0.0010	1.1180
SETN	CLKN&!D&RN	0.0100	Q(LH)	0.0010	0.9626
SETN	!CLKN&D&RN	0.0100	Q(LH)	0.0010	1.1181
SETN	CLKN&D&RN	0.0100	Q(LH)	0.0010	0.8286
RN	!CLKN&!D&SETN	0.0100	Q(HL)	0.0010	1.1024
RN	CLKN&!D&SETN	0.0100	Q(HL)	0.0010	0.7962
RN	!CLKN&D&SETN	0.0100	Q(HL)	0.0010	1.1017
RN	CLKN&D&SETN	0.0100	Q(HL)	0.0010	0.7968
RN	!CLKN&!D&!SETN	0.0100	Q(HL)	0.0010	0.7698
RN	!CLKN&D&!SETN	0.0100	Q(HL)	0.0010	0.7698
RN	CLKN&!D&!SETN	0.0100	Q(HL)	0.0010	0.5871
RN	CLKN&D&!SETN	0.0100	Q(HL)	0.0010	0.5849
RN	!CLKN&!D&!SETN	0.0100	Q(LH)	0.0010	0.5741
RN	!CLKN&D&!SETN	0.0100	Q(LH)	0.0010	0.5741
RN	CLKN&!D&!SETN	0.0100	Q(LH)	0.0010	0.4282
RN	CLKN&D&!SETN	0.0100	Q(LH)	0.0010	0.4303
CLKN	D&RN&SETN	0.0100	Q(LH)	0.0010	1.3569
CLKN	!D&RN&SETN	0.0100	Q(HL)	0.0010	1.1747
SETN(HL)	!CLKN&!D&!RN	0.0100	n/a	n/a	0.4344
SETN(HL)	!CLKN&D&!RN	0.0100	n/a	n/a	0.4344
SETN(HL)	CLKN&!D&!RN	0.0100	n/a	n/a	0.4305
SETN(HL)	CLKN&D&!RN	0.0100	n/a	n/a	0.3058
SETN(HL)	!CLKN&!D&RN	0.0100	n/a	n/a	0.0845
SETN(HL)	CLKN&!D&RN	0.0100	n/a	n/a	0.2182

continues on next page

Table 191 – continued from previous page

SETN(HL)	!CLKN&D&RN	0.0100	n/a	n/a	0.0845
SETN(HL)	CLKN&D&RN	0.0100	n/a	n/a	0.0844
CLKN(LH)	!D&!RN&!SETN	0.0100	n/a	n/a	0.2867
CLKN(LH)	!D&!RN&SETN	0.0100	n/a	n/a	0.2811
CLKN(LH)	D&!RN&!SETN	0.0100	n/a	n/a	0.3923
CLKN(LH)	D&!RN&SETN	0.0100	n/a	n/a	0.5504
CLKN(LH)	!D&RN&!SETN	0.0100	n/a	n/a	0.4074
CLKN(LH)	D&RN&!SETN	0.0100	n/a	n/a	0.2818
CLKN(LH)	!D&RN&SETN	0.0100	n/a	n/a	0.2810
CLKN(LH)	D&RN&SETN	0.0100	n/a	n/a	0.2820
CLKN(HL)	!D&!RN&!SETN	0.0100	n/a	n/a	0.4634
CLKN(HL)	!D&!RN&SETN	0.0100	n/a	n/a	0.4399
CLKN(HL)	D&!RN&!SETN	0.0100	n/a	n/a	0.5951
CLKN(HL)	D&!RN&SETN	0.0100	n/a	n/a	0.8772
CLKN(HL)	!D&RN&!SETN	0.0100	n/a	n/a	0.5437
CLKN(HL)	D&RN&!SETN	0.0100	n/a	n/a	0.4642
CLKN(HL)	!D&RN&SETN	0.0100	n/a	n/a	0.4400
CLKN(HL)	D&RN&SETN	0.0100	n/a	n/a	0.4642
D(HL)	!CLKN&!RN&!SETN	0.0100	n/a	n/a	0.0856
D(HL)	!CLKN&!RN&SETN	0.0100	n/a	n/a	0.0856
D(HL)	CLKN&!RN&!SETN	0.0100	n/a	n/a	0.2157
D(HL)	CLKN&!RN&SETN	0.0100	n/a	n/a	0.3327
D(HL)	!CLKN&RN&!SETN	0.0100	n/a	n/a	0.0856
D(HL)	CLKN&RN&!SETN	0.0100	n/a	n/a	0.2157
D(HL)	!CLKN&RN&SETN	0.0100	n/a	n/a	0.0856
D(HL)	CLKN&RN&SETN	0.0100	n/a	n/a	0.3200
RN(HL)	!CLKN&!D&SETN	0.0100	n/a	n/a	0.0832
RN(HL)	CLKN&!D&SETN	0.0100	n/a	n/a	0.0808
RN(HL)	!CLKN&D&SETN	0.0100	n/a	n/a	0.0830
RN(HL)	CLKN&D&SETN	0.0100	n/a	n/a	0.0800
D(LH)	!CLKN&!RN&!SETN	0.0100	n/a	n/a	0.0062
D(LH)	!CLKN&!RN&SETN	0.0100	n/a	n/a	0.0063
D(LH)	CLKN&!RN&!SETN	0.0100	n/a	n/a	0.0847
D(LH)	CLKN&!RN&SETN	0.0100	n/a	n/a	0.2452
D(LH)	!CLKN&RN&!SETN	0.0100	n/a	n/a	0.0062
D(LH)	CLKN&RN&!SETN	0.0100	n/a	n/a	0.0847
D(LH)	!CLKN&RN&SETN	0.0100	n/a	n/a	0.0062
D(LH)	CLKN&RN&SETN	0.0100	n/a	n/a	0.2541
RN(LH)	!CLKN&!D&SETN	0.0100	n/a	n/a	-0.0766
RN(LH)	!CLKN&D&SETN	0.0100	n/a	n/a	-0.0766
RN(LH)	CLKN&!D&SETN	0.0100	n/a	n/a	-0.0766
RN(LH)	CLKN&D&SETN	0.0100	n/a	n/a	-0.0719
SETN(LH)	!CLKN&!D&!RN	0.0100	n/a	n/a	0.1882
SETN(LH)	!CLKN&D&!RN	0.0100	n/a	n/a	0.1882
SETN(LH)	CLKN&!D&!RN	0.0100	n/a	n/a	0.1976
SETN(LH)	CLKN&D&!RN	0.0100	n/a	n/a	0.0991
SETN(LH)	!CLKN&!D&RN	0.0100	n/a	n/a	-0.0598
SETN(LH)	!CLKN&D&RN	0.0100	n/a	n/a	-0.0598
SETN(LH)	CLKN&!D&RN	0.0100	n/a	n/a	0.0266
SETN(LH)	CLKN&D&RN	0.0100	n/a	n/a	-0.0598

LEAKAGE POWER

When Condition	Power (nW)
!CLKN&!D&!RN&!SETN	0.5524
!CLKN&!D&!RN&SETN	0.5304
!CLKN&D&!RN&!SETN	0.5551
!CLKN&D&!RN&SETN	0.5331
CLKN&!D&!RN&!SETN	0.4728
CLKN&!D&!RN&SETN	0.4903
CLKN&D&!RN&!SETN	0.4745
CLKN&D&!RN&SETN	0.5042
!CLKN&D&RN&SETN	0.8548
!CLKN&!D&RN&!SETN	0.5151
!CLKN&D&RN&!SETN	0.5168
CLKN&!D&RN&!SETN	0.4580
CLKN&D&RN&!SETN	0.4595
!CLKN&!D&RN&SETN	0.5710
CLKN&!D&RN&SETN	0.7174
CLKN&D&RN&SETN	0.6848

gf180mcu_fd_sc_mcu9t5v0__dffnrsnq_4

gf180mcu_fd_sc_mcu9t5v0__dffnrsnq_4 symbol

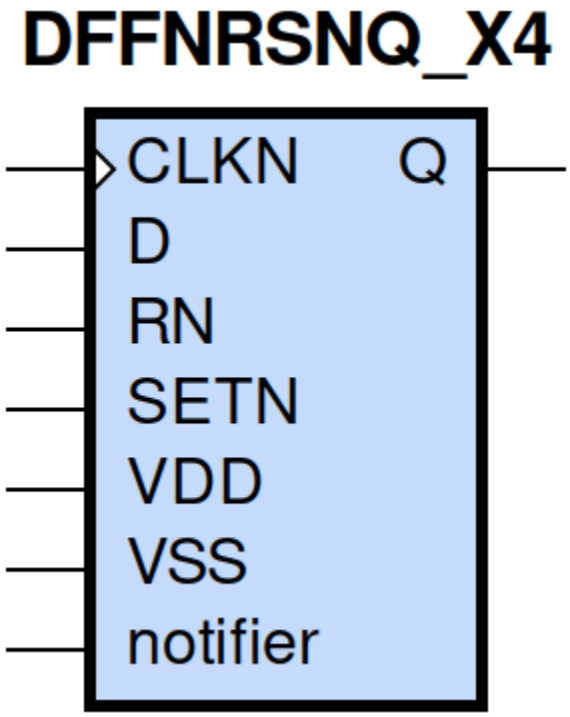

gf180mcu_fd_sc_mcu9t5v0__dffnrsnq_4 schematic

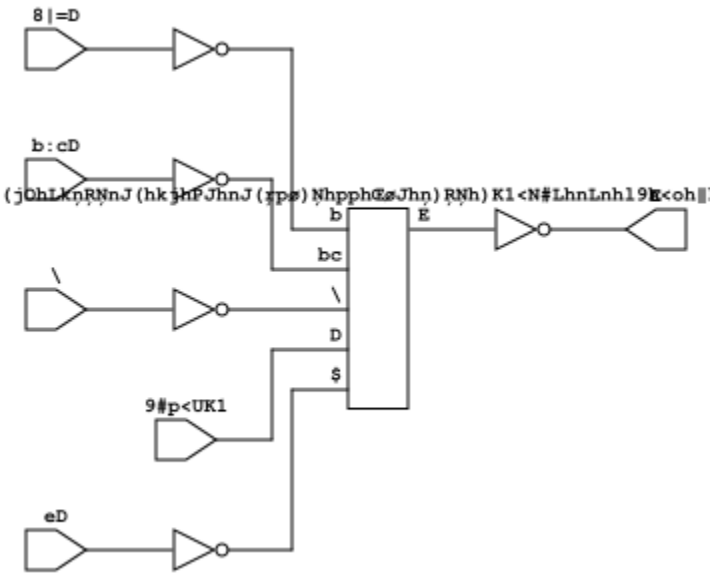

gf180mcu_fd_sc_mcu9t5v0__dffnrsnq_4 layout

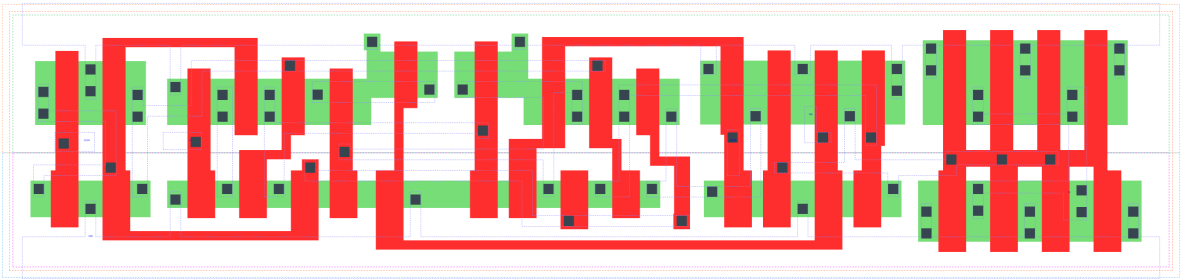

DFFNRSNQ_X4 is a negative edge triggered D-type flip flop with active low set/reset and 4X drive strength

Attributes

Attribute	Value
area	124.185600 μm^2

TRUTH TABLE

Input				Output
RN	SETN	D	CLKN	Q
H	H	L	↓	L
H	H	H	↓	H
L	H	X	X	L
H	L	X	X	H
L	L	X	X	L

FUNCTIONAL SCHEMATIC

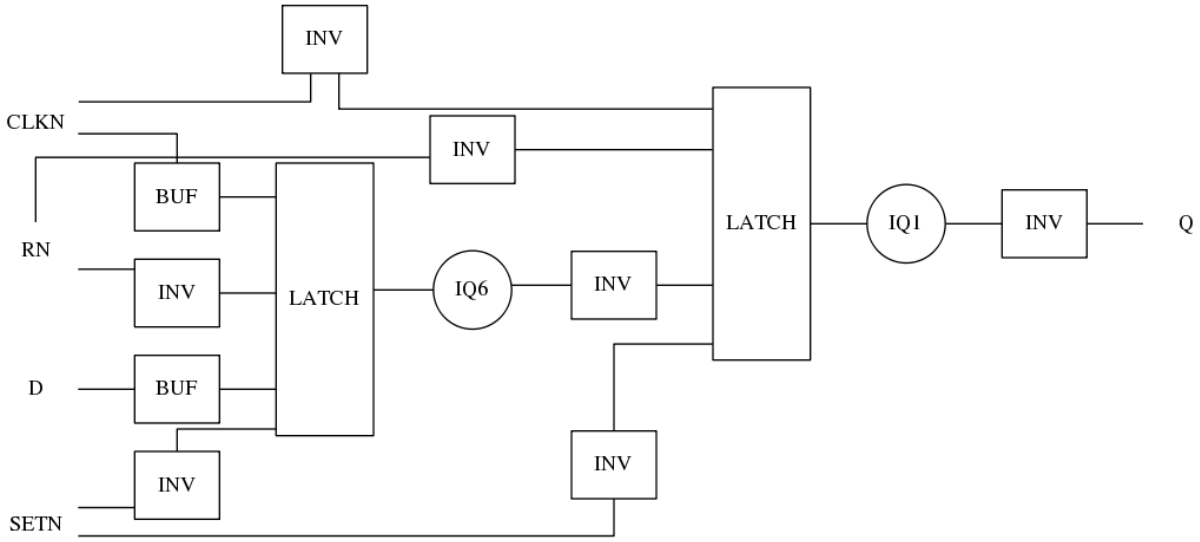

CONSTRAINTS

Constraint Pin	Related Pin	setup(ns)	hold(ns)
D(HL)	CLKN(HL)	0.3090	0.0570
D(LH)	CLKN(HL)	0.1830	0.1090
SETN(LH)	RN(LH)	-0.0400	0.1720
SETN(LH)	RN(LH)	-0.1200	0.2230
SETN(LH)	RN(LH)	-0.0400	0.1720
SETN(LH)	RN(LH)	-0.1200	0.2230
RN(LH)	SETN(LH)	0.1720	-0.0400
RN(LH)	SETN(LH)	0.2230	-0.1200
RN(LH)	SETN(LH)	0.1720	-0.0400
RN(LH)	SETN(LH)	0.2230	-0.1200

Constraint Pin	Related Pin	recovery(ns)	removal(ns)
SETN(LH)	CLKN(HL)	0.1090	0.1490
RN(LH)	CLKN(HL)	-0.3150	0.5210

Constraint Pin	Related Pin	Minimum Pulse Width(ns)
CLKN(LHL)	CLKN(LH)	0.4430
CLKN(LHL)	CLKN(LH)	0.3630
CLKN(HLH)	CLKN(HL)	0.4660
CLKN(HLH)	CLKN(HL)	0.5930
SETN(HLH)	SETN(HL)	0.4270
SETN(HLH)	SETN(HL)	0.4370
SETN(HLH)	SETN(HL)	0.4270
SETN(HLH)	SETN(HL)	0.4370
RN(HLH)	RN(HL)	0.3880
RN(HLH)	RN(HL)	0.3880
RN(HLH)	RN(HL)	0.3880
RN(HLH)	RN(HL)	0.3880

PIN CAPACITANCE (pf)

Pin	Type	Capacitance (pf)
CLKN	input	0.0051
D	input	0.0038
SETN	input	0.0095
RN	input	0.0098

DELAY AND OUTPUT TRANSITION TIME corresponding to min slew and load

Input Pin	Output	When Condition	Tin (ns)	Out Load (pf)	Delay (ns)	Tout (ns)
CLKN(HL)	Q(LH)	D&RN&SETN	0.0100	0.0010	0.8432	0.0570
CLKN(HL)	Q(HL)	!D&RN&SETN	0.0100	0.0010	0.6658	0.0508
SETN(HL)	Q(LH)	!CLKN&!D&RN	0.0100	0.0010	0.7354	0.0554
SETN(HL)	Q(LH)	CLKN&!D&RN	0.0100	0.0010	0.6367	0.0557
SETN(HL)	Q(LH)	!CLKN&D&RN	0.0100	0.0010	0.7355	0.0554
SETN(HL)	Q(LH)	CLKN&D&RN	0.0100	0.0010	0.6369	0.0553
RN(HL)	Q(HL)	!CLKN&!D&SETN	0.0100	0.0010	0.2928	0.0503
RN(HL)	Q(HL)	CLKN&!D&SETN	0.0100	0.0010	0.2928	0.0503
RN(HL)	Q(HL)	!CLKN&D&SETN	0.0100	0.0010	0.2928	0.0502
RN(HL)	Q(HL)	CLKN&D&SETN	0.0100	0.0010	0.2928	0.0503
RN(HL)	Q(HL)	!CLKN&!D&!SETN	0.0100	0.0010	0.2917	0.0493
RN(HL)	Q(HL)	!CLKN&D&!SETN	0.0100	0.0010	0.2917	0.0493
RN(HL)	Q(HL)	CLKN&!D&!SETN	0.0100	0.0010	0.2918	0.0493
RN(HL)	Q(HL)	CLKN&D&!SETN	0.0100	0.0010	0.2918	0.0493
RN(LH)	Q(LH)	!CLKN&!D&!SETN	0.0100	0.0010	0.4267	0.0553
RN(LH)	Q(LH)	!CLKN&D&!SETN	0.0100	0.0010	0.4267	0.0553
RN(LH)	Q(LH)	CLKN&!D&!SETN	0.0100	0.0010	0.4218	0.0549
RN(LH)	Q(LH)	CLKN&D&!SETN	0.0100	0.0010	0.4219	0.0550

DYNAMIC ENERGY

Input Pin	When Condition	Tin (ns)	Output	Out Load (pf)	Energy (uW/MHz)
SETN	!CLKN&!D&RN	0.0100	Q(LH)	0.0010	1.7631
SETN	CLKN&!D&RN	0.0100	Q(LH)	0.0010	1.6110
SETN	!CLKN&D&RN	0.0100	Q(LH)	0.0010	1.7631
SETN	CLKN&D&RN	0.0100	Q(LH)	0.0010	1.4761
RN	!CLKN&!D&SETN	0.0100	Q(HL)	0.0010	1.7560
RN	CLKN&!D&SETN	0.0100	Q(HL)	0.0010	1.4409
RN	!CLKN&D&SETN	0.0100	Q(HL)	0.0010	1.7551
RN	CLKN&D&SETN	0.0100	Q(HL)	0.0010	1.4414
RN	!CLKN&!D&!SETN	0.0100	Q(HL)	0.0010	1.3778
RN	!CLKN&D&!SETN	0.0100	Q(HL)	0.0010	1.3778
RN	CLKN&!D&!SETN	0.0100	Q(HL)	0.0010	1.2023
RN	CLKN&D&!SETN	0.0100	Q(HL)	0.0010	1.1999
RN	!CLKN&!D&!SETN	0.0100	Q(LH)	0.0010	1.2267
RN	!CLKN&D&!SETN	0.0100	Q(LH)	0.0010	1.2267
RN	CLKN&!D&!SETN	0.0100	Q(LH)	0.0010	1.0816
RN	CLKN&D&!SETN	0.0100	Q(LH)	0.0010	1.0838
CLKN	D&RN&SETN	0.0100	Q(LH)	0.0010	2.0557
CLKN	!D&RN&SETN	0.0100	Q(HL)	0.0010	1.8340
SETN(HL)	!CLKN&!D&!RN	0.0100	n/a	n/a	0.4245
SETN(HL)	!CLKN&D&!RN	0.0100	n/a	n/a	0.4245
SETN(HL)	CLKN&!D&!RN	0.0100	n/a	n/a	0.4239
SETN(HL)	CLKN&D&!RN	0.0100	n/a	n/a	0.2991
SETN(HL)	!CLKN&!D&RN	0.0100	n/a	n/a	0.0845
SETN(HL)	CLKN&!D&RN	0.0100	n/a	n/a	0.2193

continues on next page

Table 192 – continued from previous page

SETN(HL)	!CLKN&D&RN	0.0100	n/a	n/a	0.0845
SETN(HL)	CLKN&D&RN	0.0100	n/a	n/a	0.0844
CLKN(LH)	!D&!RN&!SETN	0.0100	n/a	n/a	0.2909
CLKN(LH)	!D&!RN&SETN	0.0100	n/a	n/a	0.2853
CLKN(LH)	D&!RN&!SETN	0.0100	n/a	n/a	0.3972
CLKN(LH)	D&!RN&SETN	0.0100	n/a	n/a	0.5550
CLKN(LH)	!D&RN&!SETN	0.0100	n/a	n/a	0.4086
CLKN(LH)	D&RN&!SETN	0.0100	n/a	n/a	0.2863
CLKN(LH)	!D&RN&SETN	0.0100	n/a	n/a	0.2851
CLKN(LH)	D&RN&SETN	0.0100	n/a	n/a	0.2863
CLKN(HL)	!D&!RN&!SETN	0.0100	n/a	n/a	0.4620
CLKN(HL)	!D&!RN&SETN	0.0100	n/a	n/a	0.4423
CLKN(HL)	D&!RN&!SETN	0.0100	n/a	n/a	0.5909
CLKN(HL)	D&!RN&SETN	0.0100	n/a	n/a	0.8727
CLKN(HL)	!D&RN&!SETN	0.0100	n/a	n/a	0.5427
CLKN(HL)	D&RN&!SETN	0.0100	n/a	n/a	0.4631
CLKN(HL)	!D&RN&SETN	0.0100	n/a	n/a	0.4425
CLKN(HL)	D&RN&SETN	0.0100	n/a	n/a	0.4631
D(HL)	!CLKN&!RN&!SETN	0.0100	n/a	n/a	0.0834
D(HL)	!CLKN&!RN&SETN	0.0100	n/a	n/a	0.0834
D(HL)	CLKN&!RN&!SETN	0.0100	n/a	n/a	0.2104
D(HL)	CLKN&!RN&SETN	0.0100	n/a	n/a	0.3275
D(HL)	!CLKN&RN&!SETN	0.0100	n/a	n/a	0.0834
D(HL)	CLKN&RN&!SETN	0.0100	n/a	n/a	0.2104
D(HL)	!CLKN&RN&SETN	0.0100	n/a	n/a	0.0835
D(HL)	CLKN&RN&SETN	0.0100	n/a	n/a	0.3143
RN(HL)	!CLKN&!D&SETN	0.0100	n/a	n/a	0.0830
RN(HL)	CLKN&!D&SETN	0.0100	n/a	n/a	0.0808
RN(HL)	!CLKN&D&SETN	0.0100	n/a	n/a	0.0829
RN(HL)	CLKN&D&SETN	0.0100	n/a	n/a	0.0800
D(LH)	!CLKN&!RN&!SETN	0.0100	n/a	n/a	0.0061
D(LH)	!CLKN&!RN&SETN	0.0100	n/a	n/a	0.0061
D(LH)	CLKN&!RN&!SETN	0.0100	n/a	n/a	0.0847
D(LH)	CLKN&!RN&SETN	0.0100	n/a	n/a	0.2451
D(LH)	!CLKN&RN&!SETN	0.0100	n/a	n/a	0.0062
D(LH)	CLKN&RN&!SETN	0.0100	n/a	n/a	0.0847
D(LH)	!CLKN&RN&SETN	0.0100	n/a	n/a	0.0063
D(LH)	CLKN&RN&SETN	0.0100	n/a	n/a	0.2549
RN(LH)	!CLKN&!D&SETN	0.0100	n/a	n/a	-0.0767
RN(LH)	!CLKN&D&SETN	0.0100	n/a	n/a	-0.0767
RN(LH)	CLKN&!D&SETN	0.0100	n/a	n/a	-0.0767
RN(LH)	CLKN&D&SETN	0.0100	n/a	n/a	-0.0717
SETN(LH)	!CLKN&!D&!RN	0.0100	n/a	n/a	0.1881
SETN(LH)	!CLKN&D&!RN	0.0100	n/a	n/a	0.1881
SETN(LH)	CLKN&!D&!RN	0.0100	n/a	n/a	0.1980
SETN(LH)	CLKN&D&!RN	0.0100	n/a	n/a	0.0989
SETN(LH)	!CLKN&!D&RN	0.0100	n/a	n/a	-0.0612
SETN(LH)	!CLKN&D&RN	0.0100	n/a	n/a	-0.0612
SETN(LH)	CLKN&!D&RN	0.0100	n/a	n/a	0.0253
SETN(LH)	CLKN&D&RN	0.0100	n/a	n/a	-0.0612

LEAKAGE POWER

When Condition	Power (nW)
!CLKN&!D&!RN&!SETN	0.6061
!CLKN&!D&!RN&SETN	0.5841
!CLKN&D&!RN&!SETN	0.6088
!CLKN&D&!RN&SETN	0.5868
CLKN&!D&!RN&!SETN	0.5265
CLKN&!D&!RN&SETN	0.5440
CLKN&D&!RN&!SETN	0.5282
CLKN&D&!RN&SETN	0.5579
!CLKN&D&RN&SETN	0.7996
!CLKN&!D&RN&!SETN	0.5662
!CLKN&D&RN&!SETN	0.5680
CLKN&!D&RN&!SETN	0.5092
CLKN&D&RN&!SETN	0.5107
!CLKN&!D&RN&SETN	0.6250
CLKN&!D&RN&SETN	0.7620
CLKN&D&RN&SETN	0.7286

gf180mcu_fd_sc_mcu9t5v0__dffnsnq_1

gf180mcu_fd_sc_mcu9t5v0__dffnsnq_1 symbol

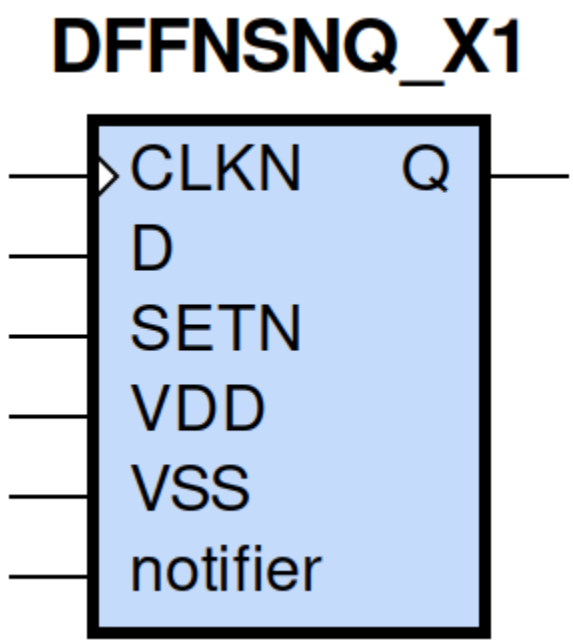

gf180mcu_fd_sc_mcu9t5v0__dffnsnq_1 schematic

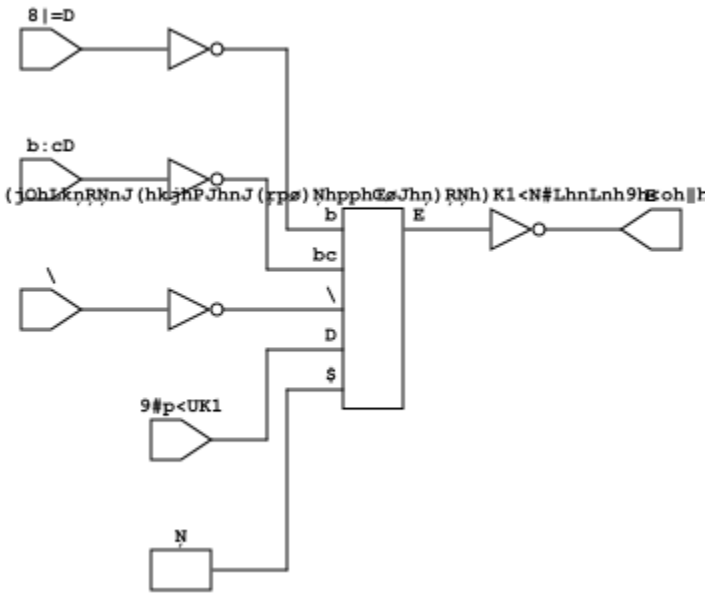

gf180mcu_fd_sc_mcu9t5v0__dffnsnq_1 layout

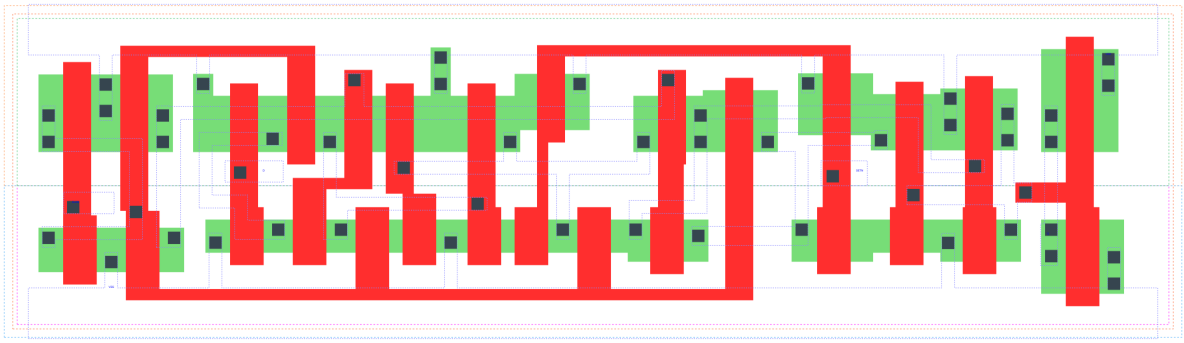

DFFNSNQ_X1 is a negative edge triggered D-type flip flop with active low set and 1X drive strength

Attributes

Attribute	Value
area	101.606400 μm^2

TRUTH TABLE

Input			Output
SETN	D	CLKN	Q
H	L	↓	L
H	H	↓	H
L	X	X	H

FUNCTIONAL SCHEMATIC

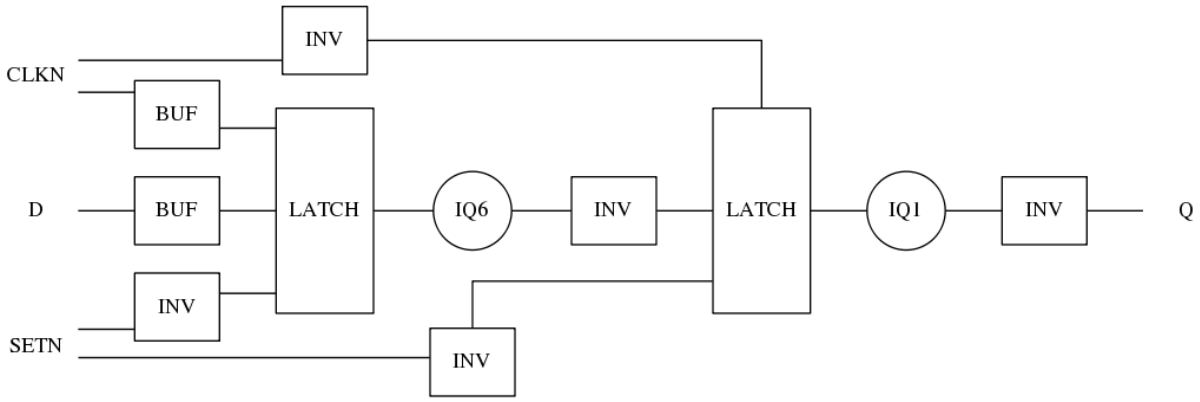

CONSTRAINTS

Constraint Pin	Related Pin	setup(ns)	hold(ns)
D(HL)	CLKN(HL)	0.2810	-0.0110
D(LH)	CLKN(HL)	0.1770	0.0970

Constraint Pin	Related Pin	recovery(ns)	removal(ns)
SETN(LH)	CLKN(HL)	0.0920	0.0970

Constraint Pin	Related Pin	Minimum Pulse Width(ns)
CLKN(LHL)	CLKN(LH)	0.4000
CLKN(LHL)	CLKN(LH)	0.3270
CLKN(HLH)	CLKN(HL)	0.3980
CLKN(HLH)	CLKN(HL)	0.3580
SETN(HLH)	SETN(HL)	0.3290
SETN(HLH)	SETN(HL)	0.3000
SETN(HLH)	SETN(HL)	0.3290
SETN(HLH)	SETN(HL)	0.3000

PIN CAPACITANCE (pf)

Pin	Type	Capacitance (pf)
CLKN	input	0.0051
D	input	0.0039
SETN	input	0.0089

DELAY AND OUTPUT TRANSITION TIME corresponding to min slew and load

Input Pin	Output	When Condition	Tin (ns)	Out Load (pf)	Delay (ns)	Tout (ns)
CLKN(HL)	Q(LH)	D&SETN	0.0100	0.0010	0.5634	0.0379
CLKN(HL)	Q(HL)	!D&SETN	0.0100	0.0010	0.5511	0.0389
SETN(HL)	Q(LH)	!CLKN&!D	0.0100	0.0010	0.4666	0.0375
SETN(HL)	Q(LH)	CLKN&!D	0.0100	0.0010	0.4174	0.0372
SETN(HL)	Q(LH)	!CLKN&D	0.0100	0.0010	0.4666	0.0374
SETN(HL)	Q(LH)	CLKN&D	0.0100	0.0010	0.4177	0.0373

DYNAMIC ENERGY

Input Pin	When Condition	Tin (ns)	Output	Out Load (pf)	Energy (uW/MHz)
SETN	!CLKN&!D	0.0100	Q(LH)	0.0010	0.8168
SETN	CLKN&!D	0.0100	Q(LH)	0.0010	0.6906
SETN	!CLKN&D	0.0100	Q(LH)	0.0010	0.8167
SETN	CLKN&D	0.0100	Q(LH)	0.0010	0.5786
CLKN	D&SETN	0.0100	Q(LH)	0.0010	1.0104
CLKN	!D&SETN	0.0100	Q(HL)	0.0010	0.8961
SETN(HL)	!CLKN&!D	0.0100	n/a	n/a	0.0749
SETN(HL)	CLKN&!D	0.0100	n/a	n/a	0.1850

continues on next page

Table 193 – continued from previous page

SETN(HL)	!CLKN&D	0.0100	n/a	n/a	0.0749
SETN(HL)	CLKN&D	0.0100	n/a	n/a	0.0749
CLKN(LH)	!D&!SETN	0.0100	n/a	n/a	0.3725
CLKN(LH)	D&!SETN	0.0100	n/a	n/a	0.2701
CLKN(LH)	!D&SETN	0.0100	n/a	n/a	0.2727
CLKN(LH)	D&SETN	0.0100	n/a	n/a	0.2699
CLKN(HL)	!D&!SETN	0.0100	n/a	n/a	0.4933
CLKN(HL)	D&!SETN	0.0100	n/a	n/a	0.4127
CLKN(HL)	!D&SETN	0.0100	n/a	n/a	0.4003
CLKN(HL)	D&SETN	0.0100	n/a	n/a	0.4128
D(HL)	!CLKN&!SETN	0.0100	n/a	n/a	0.0930
D(HL)	CLKN&!SETN	0.0100	n/a	n/a	0.2018
D(HL)	!CLKN&SETN	0.0100	n/a	n/a	0.0930
D(HL)	CLKN&SETN	0.0100	n/a	n/a	0.3130
D(LH)	!CLKN&!SETN	0.0100	n/a	n/a	0.0063
D(LH)	CLKN&!SETN	0.0100	n/a	n/a	0.0847
D(LH)	!CLKN&SETN	0.0100	n/a	n/a	0.0063
D(LH)	CLKN&SETN	0.0100	n/a	n/a	0.2302
SETN(LH)	!CLKN&!D	0.0100	n/a	n/a	-0.0472
SETN(LH)	!CLKN&D	0.0100	n/a	n/a	-0.0472
SETN(LH)	CLKN&!D	0.0100	n/a	n/a	0.0472
SETN(LH)	CLKN&D	0.0100	n/a	n/a	-0.0473

LEAKAGE POWER

When Condition	Power (nW)
!CLKN&!D&!SETN	0.4439
!CLKN&D&!SETN	0.4456
CLKN&!D&!SETN	0.4057
CLKN&D&!SETN	0.4072
!CLKN&!D&SETN	0.5442
CLKN&!D&SETN	0.6811
CLKN&D&SETN	0.6474
!CLKN&D&SETN	0.6894

gf180mcu_fd_sc_mcu9t5v0__dffnsnq_2

gf180mcu_fd_sc_mcu9t5v0__dffnsnq_2 symbol

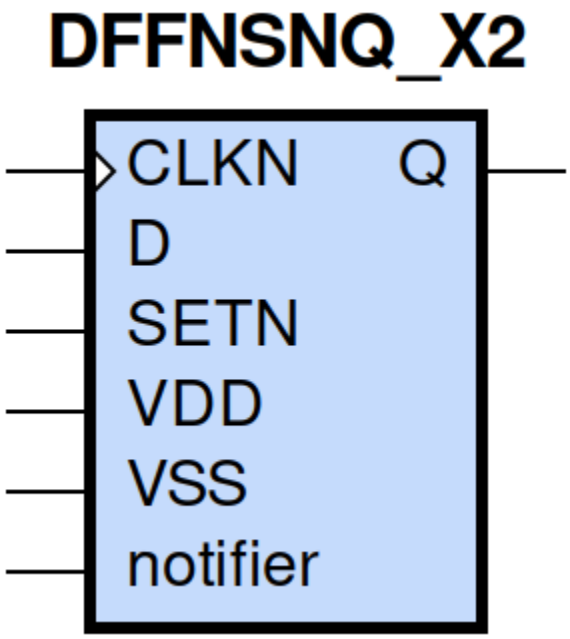

gf180mcu_fd_sc_mcu9t5v0__dffnsnq_2 schematic

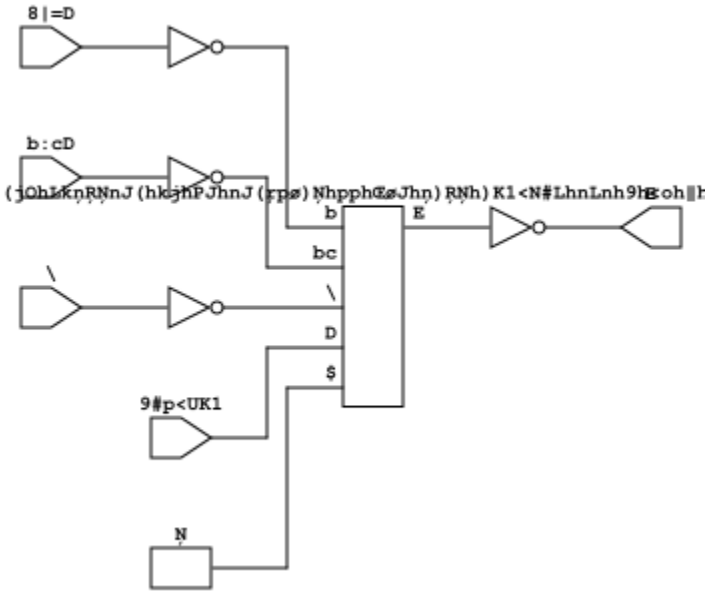

gf180mcu_fd_sc_mcu9t5v0__dffnsnq_2 layout

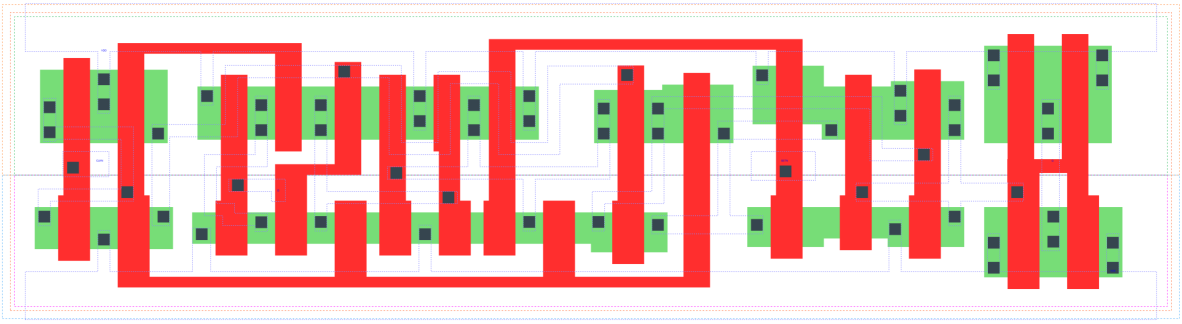

DFFNSNQ_X2 is a negative edge triggered D-type flip flop with active low set and 2X drive strength

Attributes

Attribute	Value
area	107.251200 μm^2

TRUTH TABLE

Input			Output
SETN	D	CLKN	Q
H	L	↓	L
H	H	↓	H
L	X	X	H

FUNCTIONAL SCHEMATIC

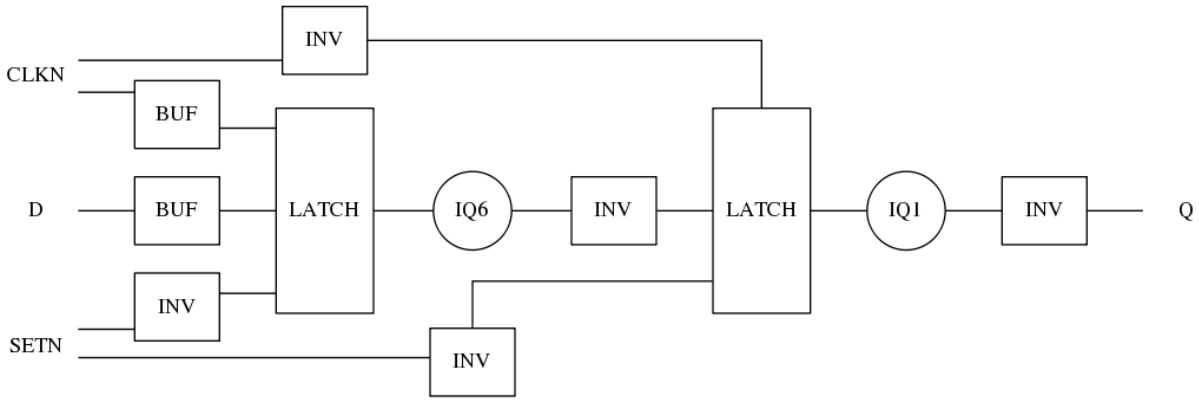

CONSTRAINTS

Constraint Pin	Related Pin	setup(ns)	hold(ns)
D(HL)	CLKN(HL)	0.3090	0.0060
D(LH)	CLKN(HL)	0.1950	0.1030

Constraint Pin	Related Pin	recovery(ns)	removal(ns)
SETN(LH)	CLKN(HL)	0.1090	0.0970

Constraint Pin	Related Pin	Minimum Pulse Width(ns)
CLKN(LHL)	CLKN(LH)	0.4240
CLKN(LHL)	CLKN(LH)	0.3570
CLKN(HLH)	CLKN(HL)	0.4270
CLKN(HLH)	CLKN(HL)	0.4170
SETN(HLH)	SETN(HL)	0.3490
SETN(HLH)	SETN(HL)	0.3390
SETN(HLH)	SETN(HL)	0.3490
SETN(HLH)	SETN(HL)	0.3390

PIN CAPACITANCE (pf)

Pin	Type	Capacitance (pf)
CLKN	input	0.0051
D	input	0.0040
SETN	input	0.0090

DELAY AND OUTPUT TRANSITION TIME corresponding to min slew and load

Input Pin	Output	When Condition	Tin (ns)	Out Load (pf)	Delay (ns)	Tout (ns)
CLKN(HL)	Q(LH)	D&SETN	0.0100	0.0010	0.6128	0.0342
CLKN(HL)	Q(HL)	!D&SETN	0.0100	0.0010	0.5928	0.0408
SETN(HL)	Q(LH)	!CLKN&!D	0.0100	0.0010	0.5102	0.0338
SETN(HL)	Q(LH)	CLKN&!D	0.0100	0.0010	0.4584	0.0337
SETN(HL)	Q(LH)	!CLKN&D	0.0100	0.0010	0.5102	0.0339
SETN(HL)	Q(LH)	CLKN&D	0.0100	0.0010	0.4585	0.0337

DYNAMIC ENERGY

Input Pin	When Condition	Tin (ns)	Output	Out Load (pf)	Energy (uW/MHz)
SETN	!CLKN&!D	0.0100	Q(LH)	0.0010	1.0005
SETN	CLKN&!D	0.0100	Q(LH)	0.0010	0.8706
SETN	!CLKN&D	0.0100	Q(LH)	0.0010	1.0005
SETN	CLKN&D	0.0100	Q(LH)	0.0010	0.7442
CLKN	D&SETN	0.0100	Q(LH)	0.0010	1.1914
CLKN	!D&SETN	0.0100	Q(HL)	0.0010	1.1314
SETN(HL)	!CLKN&!D	0.0100	n/a	n/a	0.0750
SETN(HL)	CLKN&!D	0.0100	n/a	n/a	0.1988
SETN(HL)	!CLKN&D	0.0100	n/a	n/a	0.0750
SETN(HL)	CLKN&D	0.0100	n/a	n/a	0.0749
CLKN(LH)	!D&!SETN	0.0100	n/a	n/a	0.4102
CLKN(LH)	D&!SETN	0.0100	n/a	n/a	0.3012
CLKN(LH)	!D&SETN	0.0100	n/a	n/a	0.3039
CLKN(LH)	D&SETN	0.0100	n/a	n/a	0.3011
CLKN(HL)	!D&!SETN	0.0100	n/a	n/a	0.4956
CLKN(HL)	D&!SETN	0.0100	n/a	n/a	0.4131
CLKN(HL)	!D&SETN	0.0100	n/a	n/a	0.3992
CLKN(HL)	D&SETN	0.0100	n/a	n/a	0.4131
D(HL)	!CLKN&!SETN	0.0100	n/a	n/a	0.0941
D(HL)	CLKN&!SETN	0.0100	n/a	n/a	0.2094
D(HL)	!CLKN&SETN	0.0100	n/a	n/a	0.0940
D(HL)	CLKN&SETN	0.0100	n/a	n/a	0.3138
D(LH)	!CLKN&!SETN	0.0100	n/a	n/a	0.0064
D(LH)	CLKN&!SETN	0.0100	n/a	n/a	0.0869
D(LH)	!CLKN&SETN	0.0100	n/a	n/a	0.0064

continues on next page

Table 194 – continued from previous page

D(LH)	CLKN&SETN	0.0100	n/a	n/a	0.2463
SETN(LH)	!CLKN&!D	0.0100	n/a	n/a	-0.0475
SETN(LH)	!CLKN&D	0.0100	n/a	n/a	-0.0475
SETN(LH)	CLKN&!D	0.0100	n/a	n/a	0.0395
SETN(LH)	CLKN&D	0.0100	n/a	n/a	-0.0475

LEAKAGE POWER

When Condition	Power (nW)
!CLKN&!D&!SETN	0.4695
!CLKN&D&!SETN	0.4712
CLKN&!D&!SETN	0.4313
CLKN&D&!SETN	0.4328
!CLKN&!D&SETN	0.5710
CLKN&!D&SETN	0.7055
CLKN&D&SETN	0.6718
!CLKN&D&SETN	0.7206

gf180mcu_fd_sc_mcu9t5v0__dffnsnq_4

gf180mcu_fd_sc_mcu9t5v0__dffnsnq_4 symbol

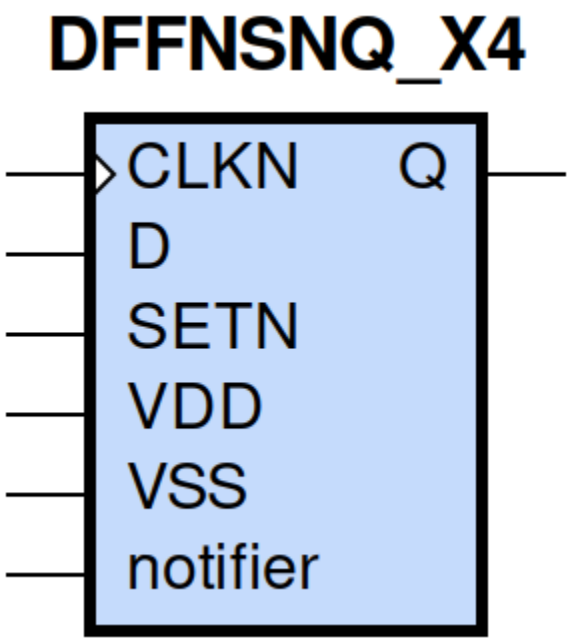

gf180mcu_fd_sc_mcu9t5v0__dffnsnq_4 schematic

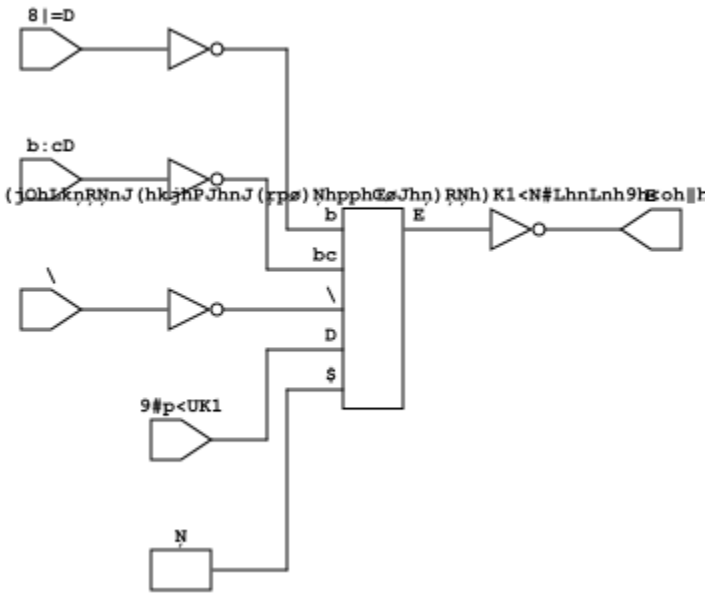

gf180mcu_fd_sc_mcu9t5v0__dffnsnq_4 layout

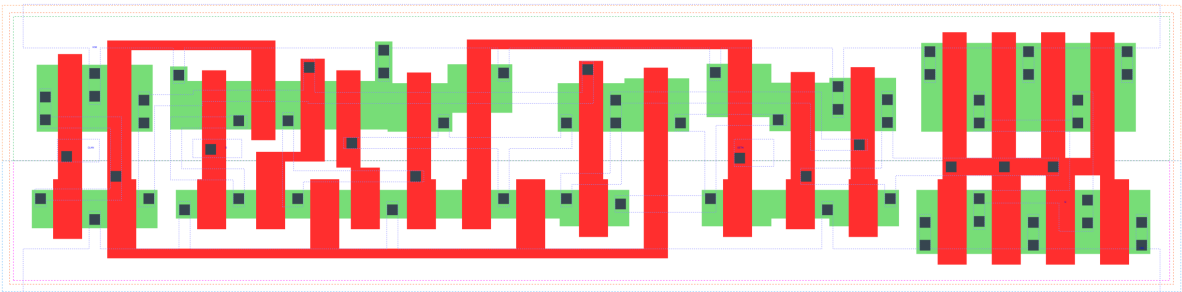

DFFNSNQ_X4 is a negative edge triggered D-type flip flop with active low set and 4X drive strength

Attributes

Attribute	Value
area	118.540800 μm^2

TRUTH TABLE

Input			Output
SETN	D	CLKN	Q
H	L	↓	L
H	H	↓	H
L	X	X	H

FUNCTIONAL SCHEMATIC

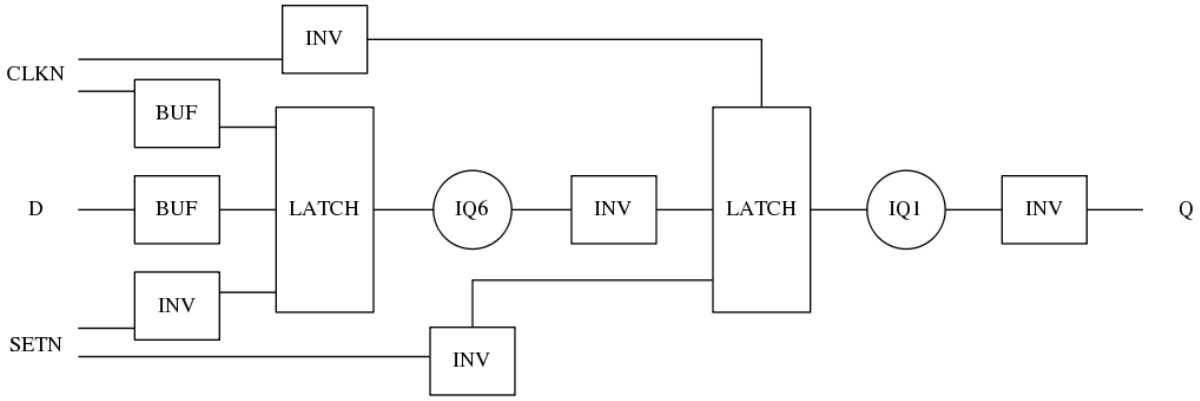

CONSTRAINTS

Constraint Pin	Related Pin	setup(ns)	hold(ns)
D(HL)	CLKN(HL)	0.2810	0.0060
D(LH)	CLKN(HL)	0.1950	0.0970

Constraint Pin	Related Pin	recovery(ns)	removal(ns)
SETN(LH)	CLKN(HL)	0.0860	0.0970

Constraint Pin	Related Pin	Minimum Pulse Width(ns)
CLKN(LHL)	CLKN(LH)	0.3940
CLKN(LHL)	CLKN(LH)	0.3390
CLKN(HLH)	CLKN(HL)	0.5050
CLKN(HLH)	CLKN(HL)	0.5050
SETN(HLH)	SETN(HL)	0.3580
SETN(HLH)	SETN(HL)	0.4170
SETN(HLH)	SETN(HL)	0.3580
SETN(HLH)	SETN(HL)	0.4070

PIN CAPACITANCE (pf)

Pin	Type	Capacitance (pf)
CLKN	input	0.0051
D	input	0.0040
SETN	input	0.0089

DELAY AND OUTPUT TRANSITION TIME corresponding to min slew and load

Input Pin	Output	When Condition	Tin (ns)	Out Load (pf)	Delay (ns)	Tout (ns)
CLKN(HL)	Q(LH)	D&SETN	0.0100	0.0010	0.7094	0.0436
CLKN(HL)	Q(HL)	!D&SETN	0.0100	0.0010	0.7076	0.0577
SETN(HL)	Q(LH)	!CLKN&!D	0.0100	0.0010	0.6058	0.0425
SETN(HL)	Q(LH)	CLKN&!D	0.0100	0.0010	0.5595	0.0427
SETN(HL)	Q(LH)	!CLKN&D	0.0100	0.0010	0.6060	0.0427
SETN(HL)	Q(LH)	CLKN&D	0.0100	0.0010	0.5598	0.0427

DYNAMIC ENERGY

Input Pin	When Condition	Tin (ns)	Output	Out Load (pf)	Energy (uW/MHz)
SETN	!CLKN&!D	0.0100	Q(LH)	0.0010	1.4674
SETN	CLKN&!D	0.0100	Q(LH)	0.0010	1.3489
SETN	!CLKN&D	0.0100	Q(LH)	0.0010	1.4677
SETN	CLKN&D	0.0100	Q(LH)	0.0010	1.2364
CLKN	D&SETN	0.0100	Q(LH)	0.0010	1.7051
CLKN	!D&SETN	0.0100	Q(HL)	0.0010	1.8744
SETN(HL)	!CLKN&!D	0.0100	n/a	n/a	0.0749
SETN(HL)	CLKN&!D	0.0100	n/a	n/a	0.1848

continues on next page

Table 195 – continued from previous page

SETN(HL)	!CLKN&D	0.0100	n/a	n/a	0.0750
SETN(HL)	CLKN&D	0.0100	n/a	n/a	0.0749
CLKN(LH)	!D&!SETN	0.0100	n/a	n/a	0.3684
CLKN(LH)	D&!SETN	0.0100	n/a	n/a	0.2676
CLKN(LH)	!D&SETN	0.0100	n/a	n/a	0.2702
CLKN(LH)	D&SETN	0.0100	n/a	n/a	0.2674
CLKN(HL)	!D&!SETN	0.0100	n/a	n/a	0.4961
CLKN(HL)	D&!SETN	0.0100	n/a	n/a	0.4152
CLKN(HL)	!D&SETN	0.0100	n/a	n/a	0.4029
CLKN(HL)	D&SETN	0.0100	n/a	n/a	0.4152
D(HL)	!CLKN&!SETN	0.0100	n/a	n/a	0.0954
D(HL)	CLKN&!SETN	0.0100	n/a	n/a	0.2024
D(HL)	!CLKN&SETN	0.0100	n/a	n/a	0.0954
D(HL)	CLKN&SETN	0.0100	n/a	n/a	0.3129
D(LH)	!CLKN&!SETN	0.0100	n/a	n/a	0.0064
D(LH)	CLKN&!SETN	0.0100	n/a	n/a	0.0847
D(LH)	!CLKN&SETN	0.0100	n/a	n/a	0.0064
D(LH)	CLKN&SETN	0.0100	n/a	n/a	0.2336
SETN(LH)	!CLKN&!D	0.0100	n/a	n/a	-0.0435
SETN(LH)	!CLKN&D	0.0100	n/a	n/a	-0.0435
SETN(LH)	CLKN&!D	0.0100	n/a	n/a	0.0472
SETN(LH)	CLKN&D	0.0100	n/a	n/a	-0.0436

LEAKAGE POWER

When Condition	Power (nW)
!CLKN&!D&!SETN	0.5207
!CLKN&D&!SETN	0.5224
CLKN&!D&!SETN	0.4824
CLKN&D&!SETN	0.4840
!CLKN&!D&SETN	0.6247
CLKN&!D&SETN	0.7579
CLKN&D&SETN	0.7435
!CLKN&D&SETN	0.7653

gf180mcu_fd_sc_mcu9t5v0__dffq_1

gf180mcu_fd_sc_mcu9t5v0__dffq_1 symbol

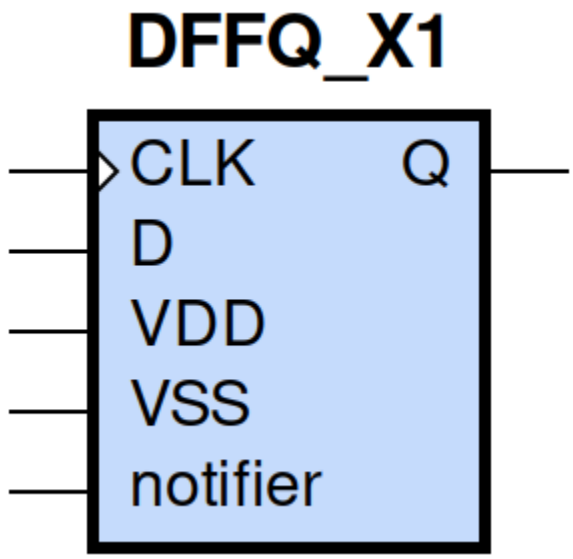

gf180mcu_fd_sc_mcu9t5v0__dffq_1 schematic

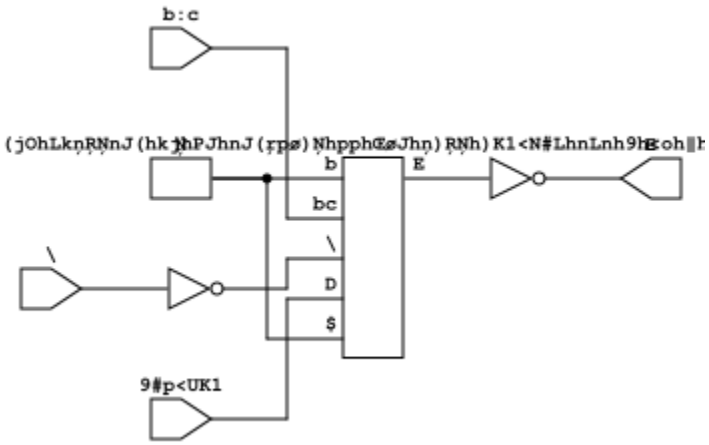

gf180mcu_fd_sc_mcu9t5v0__dffq_1 layout

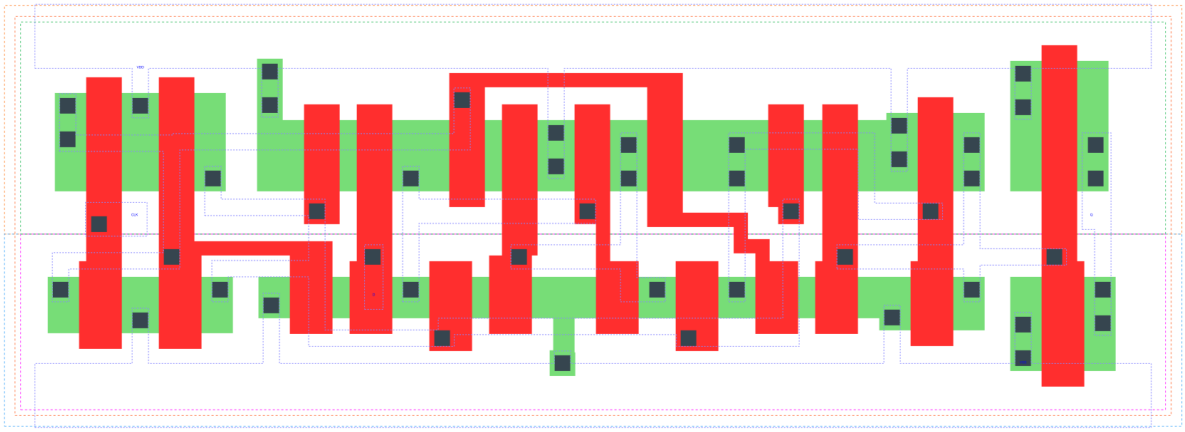

DFFQ_X1 is a positive edge triggered D-type flip flop with 1X drive strength

Attributes

Attribute	Value
area	79.027200 μm^2

TRUTH TABLE

Input		Output
D	CLK	Q
L	↑	L
H	↑	H

FUNCTIONAL SCHEMATIC

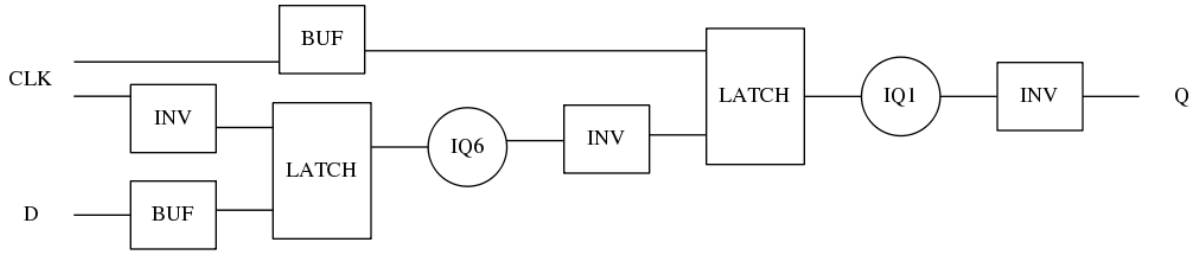

CONSTRAINTS

Constraint Pin	Related Pin	setup(ns)	hold(ns)
D(LH)	CLK(LH)	0.1830	0.0110
D(HL)	CLK(LH)	0.1370	0.1090

Constraint Pin	Related Pin	Minimum Pulse Width(ns)
CLK(LHL)	CLK(LH)	0.2710
CLK(LHL)	CLK(LH)	0.3100
CLK(HLH)	CLK(HL)	0.3940
CLK(HLH)	CLK(HL)	0.3150

PIN CAPACITANCE (pf)

Pin	Type	Capacitance (pf)
CLK	input	0.0050
D	input	0.0038

DELAY AND OUTPUT TRANSITION TIME corresponding to min slew and load

Input Pin	Output	When Condition	Tin (ns)	Out Load (pf)	Delay (ns)	Tout (ns)
CLK(LH)	Q(HL)	!D	0.0100	0.0010	0.5297	0.0354
CLK(LH)	Q(LH)	D	0.0100	0.0010	0.4865	0.0364

DYNAMIC ENERGY

Input Pin	When Condition	Tin (ns)	Output	Out Load (pf)	Energy (uW/MHz)
CLK	!D	0.0100	Q(HL)	0.0010	0.6822
CLK	D	0.0100	Q(LH)	0.0010	0.6376
D(LH)	!CLK	0.0100	n/a	n/a	0.1550
D(LH)	CLK	0.0100	n/a	n/a	-0.0240
CLK(LH)	!D	0.0100	n/a	n/a	0.2611
CLK(LH)	D	0.0100	n/a	n/a	0.2603
D(HL)	!CLK	0.0100	n/a	n/a	0.2291
D(HL)	CLK	0.0100	n/a	n/a	0.0223
CLK(HL)	!D	0.0100	n/a	n/a	0.3959
CLK(HL)	D	0.0100	n/a	n/a	0.4088

LEAKAGE POWER

When Condition	Power (nW)
!CLK&!D	0.3461
!CLK&D	0.3876
CLK&!D	0.4899
CLK&D	0.5995

gf180mcu_fd_sc_mcu9t5v0__dffq_2

gf180mcu_fd_sc_mcu9t5v0__dffq_2 symbol

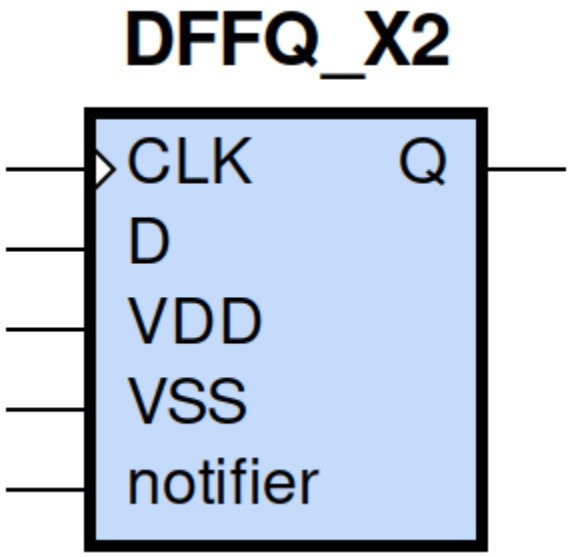

gf180mcu_fd_sc_mcu9t5v0__dffq_2 schematic

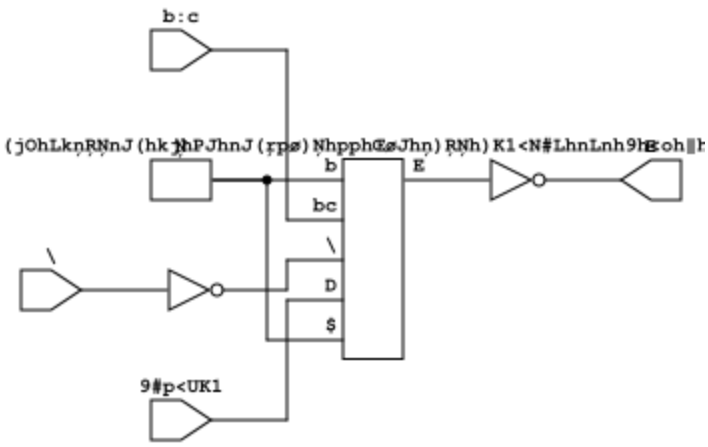

gf180mcu_fd_sc_mcu9t5v0__dffq_2 layout

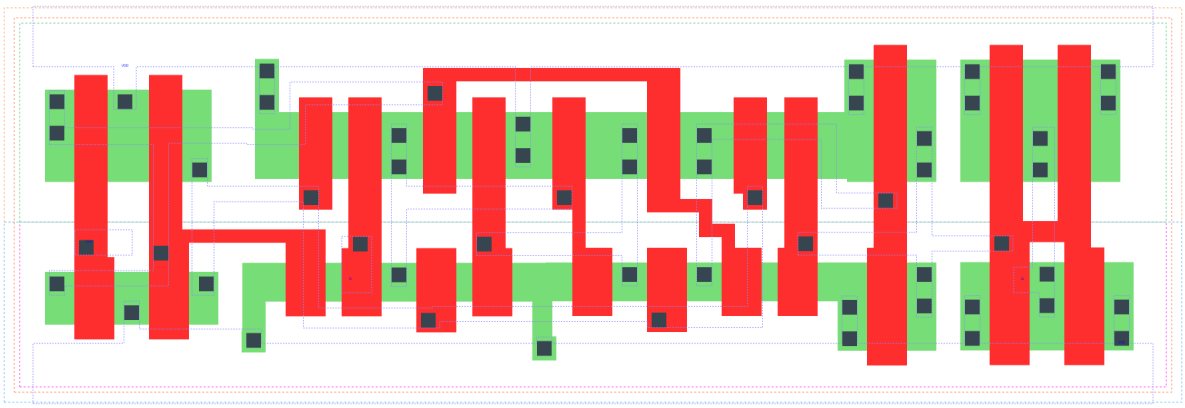

DFFQ_X2 is a Poisitive edge triggered D-type flip flop with 2X drive strength

Attributes

Attribute	Value
area	84.672000 μm^2

TRUTH TABLE

Input		Output
D	CLK	Q
L	↑	L
H	↑	H

FUNCTIONAL SCHEMATIC

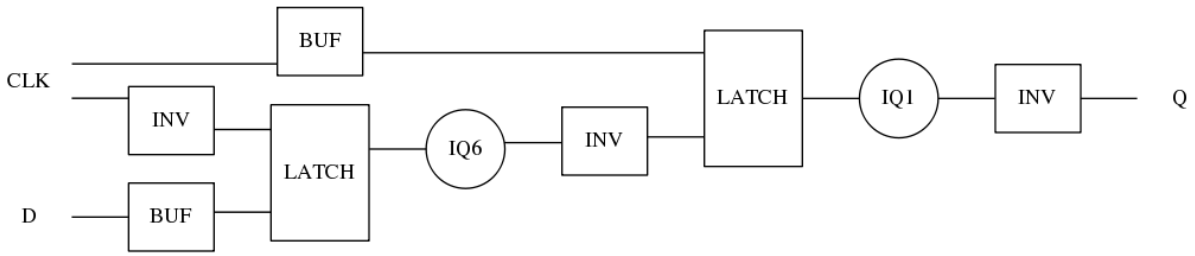

CONSTRAINTS

Constraint Pin	Related Pin	setup(ns)	hold(ns)
D(LH)	CLK(LH)	0.1890	0.0170
D(HL)	CLK(LH)	0.1370	0.1200

Constraint Pin	Related Pin	Minimum Pulse Width(ns)
CLK(LHL)	CLK(LH)	0.2800
CLK(LHL)	CLK(LH)	0.3490
CLK(HLH)	CLK(HL)	0.3940
CLK(HLH)	CLK(HL)	0.3150

PIN CAPACITANCE (pf)

Pin	Type	Capacitance (pf)
CLK	input	0.0050
D	input	0.0039

DELAY AND OUTPUT TRANSITION TIME corresponding to min slew and load

Input Pin	Output	When Condition	Tin (ns)	Out Load (pf)	Delay (ns)	Tout (ns)
CLK(LH)	Q(HL)	!D	0.0100	0.0010	0.5404	0.0292
CLK(LH)	Q(LH)	D	0.0100	0.0010	0.5033	0.0290

DYNAMIC ENERGY

Input Pin	When Condition	Tin (ns)	Output	Out Load (pf)	Energy (uW/MHz)
CLK	!D	0.0100	Q(HL)	0.0010	0.9049
CLK	D	0.0100	Q(LH)	0.0010	0.8547
D(LH)	!CLK	0.0100	n/a	n/a	0.1496
D(LH)	CLK	0.0100	n/a	n/a	-0.0240
CLK(LH)	!D	0.0100	n/a	n/a	0.2620
CLK(LH)	D	0.0100	n/a	n/a	0.2612
D(HL)	!CLK	0.0100	n/a	n/a	0.2364
D(HL)	CLK	0.0100	n/a	n/a	0.0223
CLK(HL)	!D	0.0100	n/a	n/a	0.4056
CLK(HL)	D	0.0100	n/a	n/a	0.4186

LEAKAGE POWER

When Condition	Power (nW)
!CLK&!D	0.3731
!CLK&D	0.4138
CLK&!D	0.5170
CLK&D	0.6259

gf180mcu_fd_sc_mcu9t5v0__dffq_4

gf180mcu_fd_sc_mcu9t5v0__dffq_4 symbol

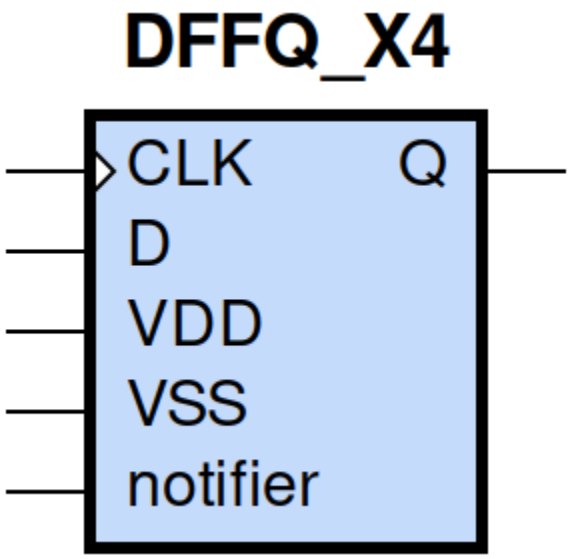

gf180mcu_fd_sc_mcu9t5v0__dffq_4 schematic

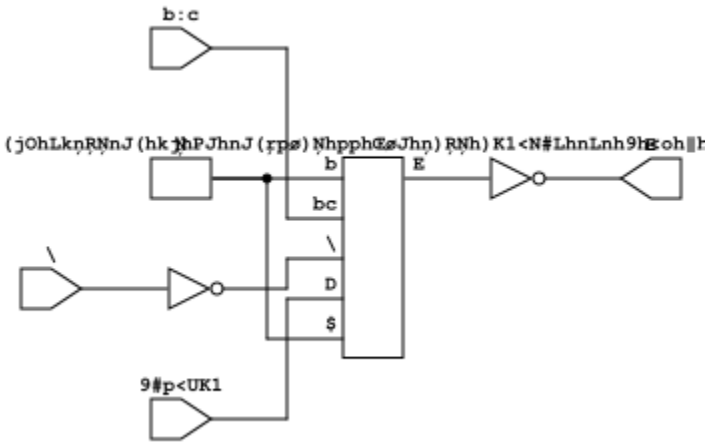

gf180mcu_fd_sc_mcu9t5v0__dffq_4 layout

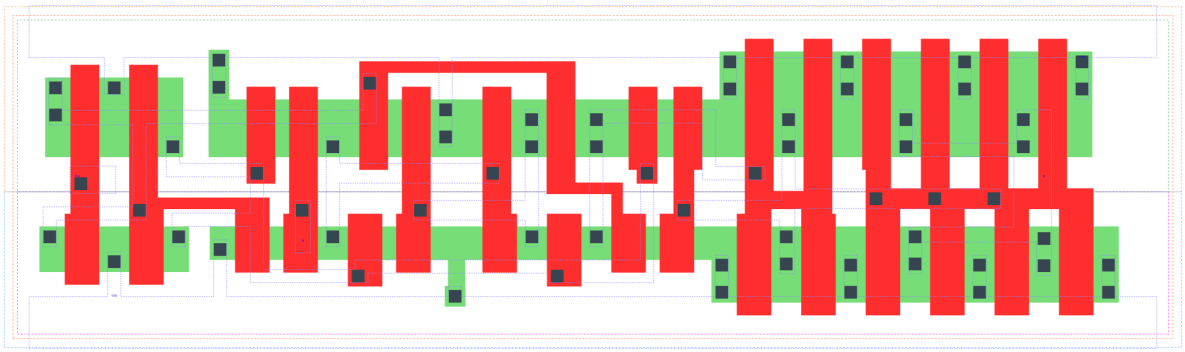

DFFQ_X4 is a Poisitive edge triggered D-type flip flop with 4X drive strength

Attributes

Attribute	Value
area	98.784000 μm^2

TRUTH TABLE

Input		Output
D	CLK	Q
L	↑	L
H	↑	H

FUNCTIONAL SCHEMATIC

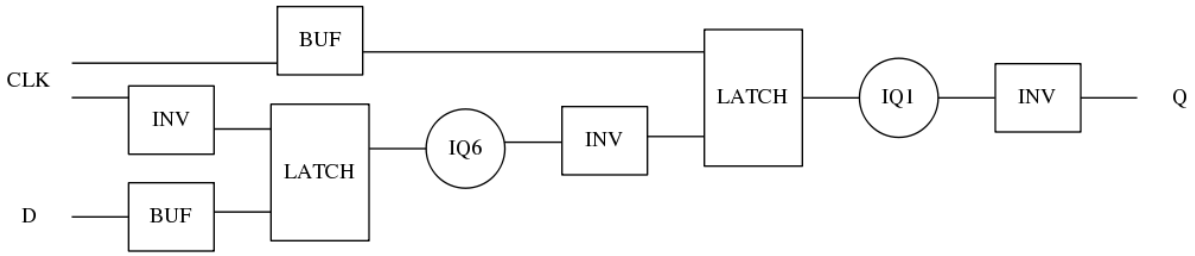

CONSTRAINTS

Constraint Pin	Related Pin	setup(ns)	hold(ns)
D(LH)	CLK(LH)	0.1830	0.0230
D(HL)	CLK(LH)	0.1430	0.1260

Constraint Pin	Related Pin	Minimum Pulse Width(ns)
CLK(LHL)	CLK(LH)	0.3290
CLK(LHL)	CLK(LH)	0.4070
CLK(HLH)	CLK(HL)	0.4000
CLK(HLH)	CLK(HL)	0.3080

PIN CAPACITANCE (pf)

Pin	Type	Capacitance (pf)
CLK	input	0.0050
D	input	0.0038

DELAY AND OUTPUT TRANSITION TIME corresponding to min slew and load

Input Pin	Output	When Condition	Tin (ns)	Out Load (pf)	Delay (ns)	Tout (ns)
CLK(LH)	Q(HL)	!D	0.0100	0.0010	0.5931	0.0283
CLK(LH)	Q(LH)	D	0.0100	0.0010	0.5667	0.0297

DYNAMIC ENERGY

Input Pin	When Condition	Tin (ns)	Output	Out Load (pf)	Energy (uW/MHz)
CLK	!D	0.0100	Q(HL)	0.0010	1.4348
CLK	D	0.0100	Q(LH)	0.0010	1.4368
D(LH)	!CLK	0.0100	n/a	n/a	0.1531
D(LH)	CLK	0.0100	n/a	n/a	-0.0240
CLK(LH)	!D	0.0100	n/a	n/a	0.2599
CLK(LH)	D	0.0100	n/a	n/a	0.2592
D(HL)	!CLK	0.0100	n/a	n/a	0.2293
D(HL)	CLK	0.0100	n/a	n/a	0.0223
CLK(HL)	!D	0.0100	n/a	n/a	0.3947
CLK(HL)	D	0.0100	n/a	n/a	0.4077

LEAKAGE POWER

When Condition	Power (nW)
!CLK&!D	0.4524
!CLK&D	0.4916
CLK&!D	0.5962
CLK&D	0.7034

gf180mcu_fd_sc_mcu9t5v0__dffrnq_1

gf180mcu_fd_sc_mcu9t5v0__dffrnq_1 symbol

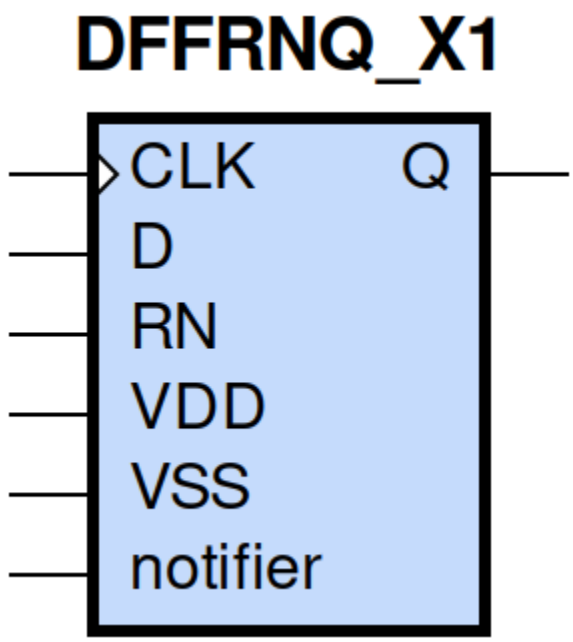

gf180mcu_fd_sc_mcu9t5v0__dffrnq_1 schematic

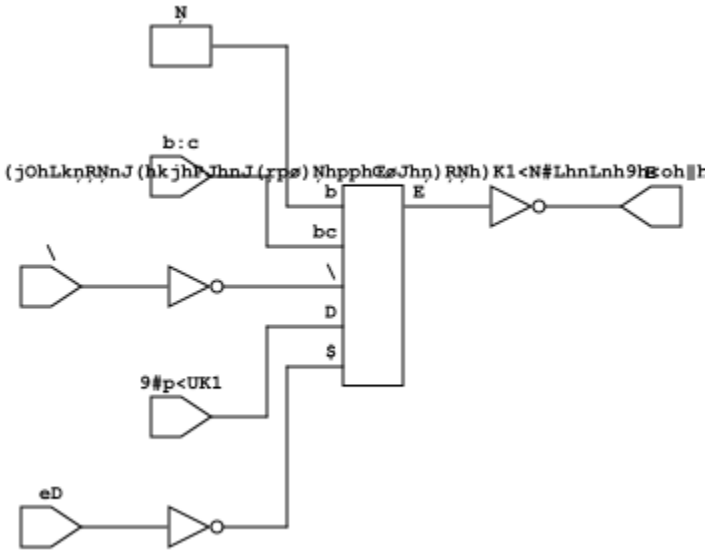

gf180mcu_fd_sc_mcu9t5v0__dffrnq_1 layout

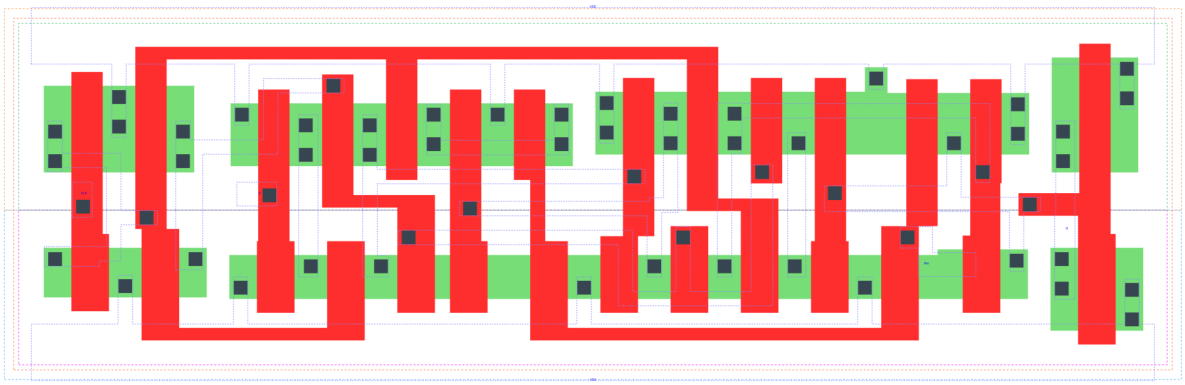

DFFRNQ_X1 is a positive edge triggered D-type flip flop with active low reset and 1X drive strength

Attributes

Attribute	Value
area	90.316800 μm^2

TRUTH TABLE

Input			Output
RN	D	CLK	Q
H	L	↑	L
H	H	↑	H
L	X	X	L

FUNCTIONAL SCHEMATIC

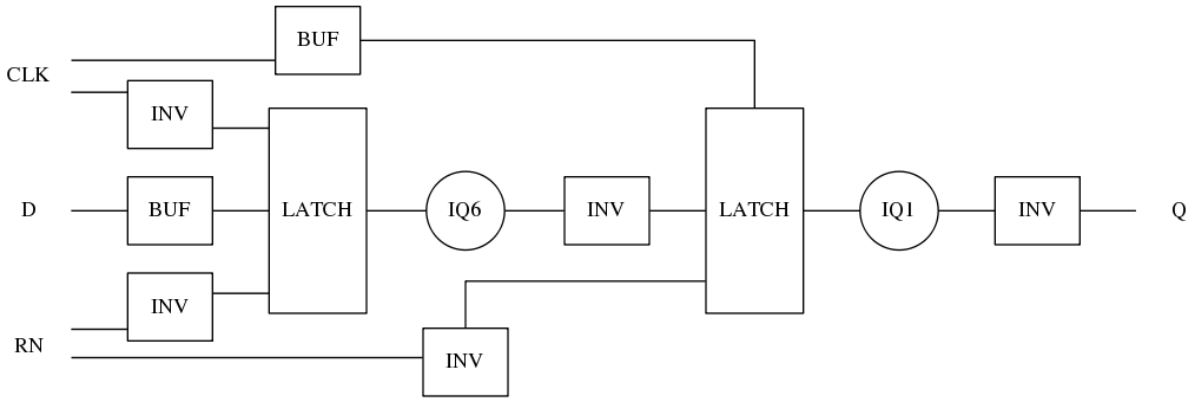

CONSTRAINTS

Constraint Pin	Related Pin	setup(ns)	hold(ns)
D(HL)	CLK(LH)	0.1600	0.0630
D(LH)	CLK(LH)	0.2230	-0.0570

Constraint Pin	Related Pin	recovery(ns)	removal(ns)
RN(LH)	CLK(LH)	-0.2000	0.3550

Constraint Pin	Related Pin	Minimum Pulse Width(ns)
CLK(HLH)	CLK(HL)	0.3270
CLK(HLH)	CLK(HL)	0.3390
CLK(LHL)	CLK(LH)	0.3290
CLK(LHL)	CLK(LH)	0.3490
RN(HLH)	RN(HL)	0.3290
RN(HLH)	RN(HL)	0.3290
RN(HLH)	RN(HL)	0.3780
RN(HLH)	RN(HL)	0.3780

PIN CAPACITANCE (pf)

Pin	Type	Capacitance (pf)
CLK	input	0.0050
D	input	0.0041
RN	input	0.0083

DELAY AND OUTPUT TRANSITION TIME corresponding to min slew and load

Input Pin	Output	When Condition	Tin (ns)	Out Load (pf)	Delay (ns)	Tout (ns)
CLK(LH)	Q(HL)	!D&RN	0.0100	0.0010	0.5526	0.0403
CLK(LH)	Q(LH)	D&RN	0.0100	0.0010	0.5626	0.0457
RN(HL)	Q(HL)	!CLK&!D	0.0100	0.0010	0.2251	0.0432
RN(HL)	Q(HL)	!CLK&D	0.0100	0.0010	0.2251	0.0433
RN(HL)	Q(HL)	CLK&!D	0.0100	0.0010	0.2251	0.0431
RN(HL)	Q(HL)	CLK&D	0.0100	0.0010	0.2251	0.0432

DYNAMIC ENERGY

Input Pin	When Condition	Tin (ns)	Output	Out Load (pf)	Energy (uW/MHz)
CLK	!D&RN	0.0100	Q(HL)	0.0010	0.8161
CLK	D&RN	0.0100	Q(LH)	0.0010	0.8200
RN	!CLK&!D	0.0100	Q(HL)	0.0010	0.5646
RN	!CLK&D	0.0100	Q(HL)	0.0010	0.5827
RN	CLK&!D	0.0100	Q(HL)	0.0010	0.8887
RN	CLK&D	0.0100	Q(HL)	0.0010	0.8887
D(HL)	!CLK&!RN	0.0100	n/a	n/a	0.3431
D(HL)	CLK&!RN	0.0100	n/a	n/a	0.0891
D(HL)	!CLK&RN	0.0100	n/a	n/a	0.3259
D(HL)	CLK&RN	0.0100	n/a	n/a	0.0890
CLK(LH)	!D&!RN	0.0100	n/a	n/a	0.3151
CLK(LH)	D&!RN	0.0100	n/a	n/a	0.6745
CLK(LH)	!D&RN	0.0100	n/a	n/a	0.3150
CLK(LH)	D&RN	0.0100	n/a	n/a	0.3044
CLK(HL)	!D&!RN	0.0100	n/a	n/a	0.3898
CLK(HL)	D&!RN	0.0100	n/a	n/a	0.5989
CLK(HL)	!D&RN	0.0100	n/a	n/a	0.3899
CLK(HL)	D&RN	0.0100	n/a	n/a	0.3913
D(LH)	!CLK&!RN	0.0100	n/a	n/a	0.2135
D(LH)	CLK&!RN	0.0100	n/a	n/a	0.0062
D(LH)	!CLK&RN	0.0100	n/a	n/a	0.2247
D(LH)	CLK&RN	0.0100	n/a	n/a	0.0063
RN(HL)	!CLK&!D	0.0100	n/a	n/a	0.0677
RN(HL)	!CLK&D	0.0100	n/a	n/a	0.0671
RN(HL)	CLK&!D	0.0100	n/a	n/a	0.0705

continues on next page

Table 196 – continued from previous page

RN(HL)	CLK&D	0.0100	n/a	n/a	0.0702
RN(LH)	!CLK&!D	0.0100	n/a	n/a	-0.0634
RN(LH)	!CLK&D	0.0100	n/a	n/a	-0.0584
RN(LH)	CLK&!D	0.0100	n/a	n/a	-0.0635
RN(LH)	CLK&D	0.0100	n/a	n/a	-0.0635

LEAKAGE POWER

When Condition	Power (nW)
!CLK&!D&!RN	0.4102
!CLK&D&!RN	0.4104
CLK&!D&!RN	0.4503
CLK&D&!RN	0.4530
!CLK&!D&RN	0.4104
!CLK&D&RN	0.5585
CLK&!D&RN	0.5000
CLK&D&RN	0.6407

gf180mcu_fd_sc_mcu9t5v0__dffrnq_2

gf180mcu_fd_sc_mcu9t5v0__dffrnq_2 symbol

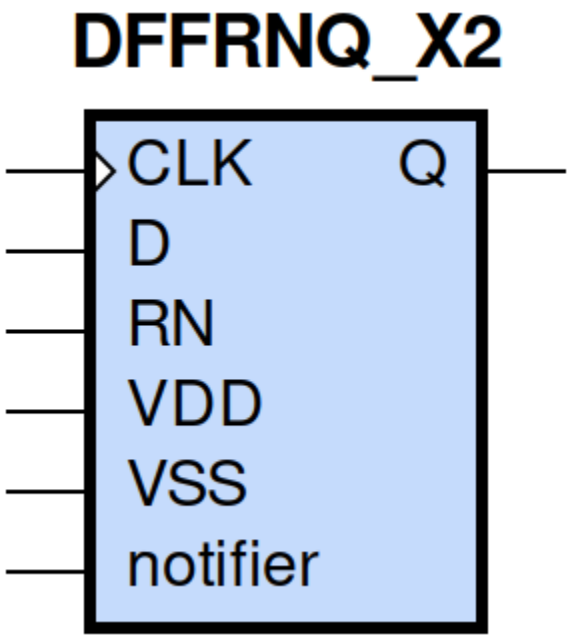

gf180mcu_fd_sc_mcu9t5v0__dffrnq_2 schematic

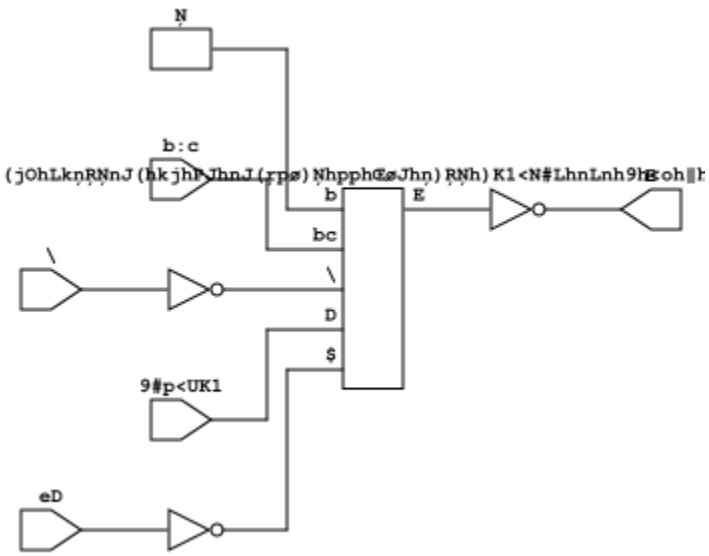

gf180mcu_fd_sc_mcu9t5v0__dffrnq_2 layout

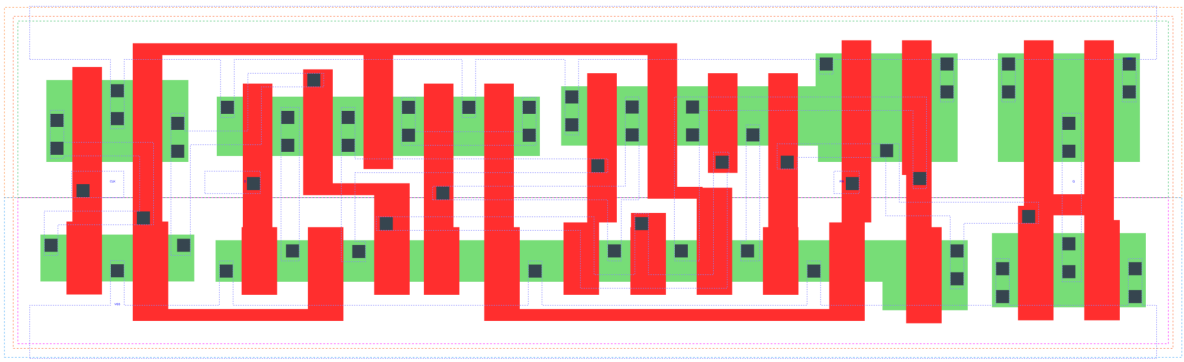

DFFRNQ_X2 is a positive edge triggered D-type flip flop with active low reset and 2X drive strength

Attributes

Attribute	Value
area	95.961600 μm^2

TRUTH TABLE

Input			Output
RN	D	CLK	Q
H	L	↑	L
H	H	↑	H
L	X	X	L

FUNCTIONAL SCHEMATIC

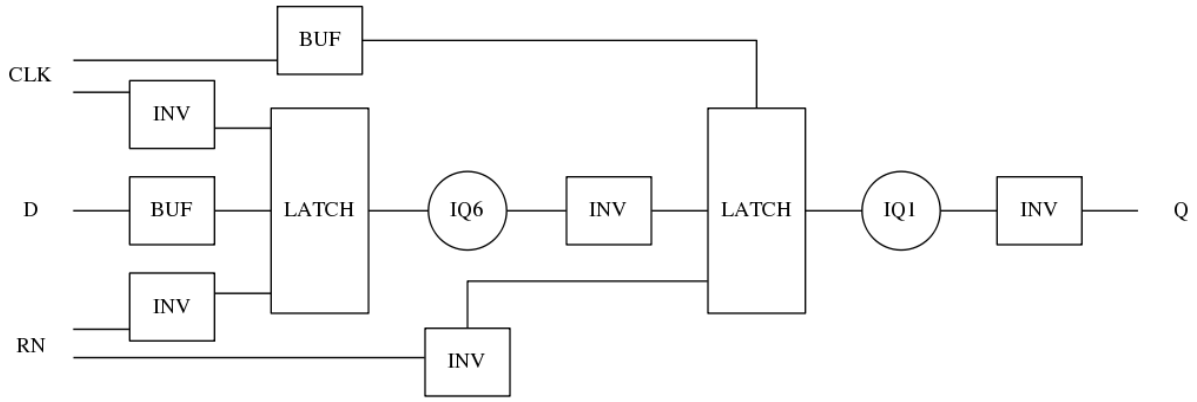

CONSTRAINTS

Constraint Pin	Related Pin	setup(ns)	hold(ns)
D(HL)	CLK(LH)	0.1660	0.0690
D(LH)	CLK(LH)	0.2120	-0.0520

Constraint Pin	Related Pin	recovery(ns)	removal(ns)
RN(LH)	CLK(LH)	-0.1950	0.3380

Constraint Pin	Related Pin	Minimum Pulse Width(ns)
CLK(HLH)	CLK(HL)	0.3330
CLK(HLH)	CLK(HL)	0.3270
CLK(LHL)	CLK(LH)	0.3190
CLK(LHL)	CLK(LH)	0.4170
RN(HLH)	RN(HL)	0.2410
RN(HLH)	RN(HL)	0.2410
RN(HLH)	RN(HL)	0.3880
RN(HLH)	RN(HL)	0.3880

PIN CAPACITANCE (pf)

Pin	Type	Capacitance (pf)
CLK	input	0.0051
D	input	0.0041
RN	input	0.0097

DELAY AND OUTPUT TRANSITION TIME corresponding to min slew and load

Input Pin	Output	When Condition	Tin (ns)	Out Load (pf)	Delay (ns)	Tout (ns)
CLK(LH)	Q(HL)	!D&RN	0.0100	0.0010	0.5351	0.0298
CLK(LH)	Q(LH)	D&RN	0.0100	0.0010	0.6368	0.0419
RN(HL)	Q(HL)	!CLK&!D	0.0100	0.0010	0.1755	0.0308
RN(HL)	Q(HL)	!CLK&D	0.0100	0.0010	0.1755	0.0308
RN(HL)	Q(HL)	CLK&!D	0.0100	0.0010	0.1756	0.0306
RN(HL)	Q(HL)	CLK&D	0.0100	0.0010	0.1756	0.0305

DYNAMIC ENERGY

Input Pin	When Condition	Tin (ns)	Output	Out Load (pf)	Energy (uW/MHz)
CLK	!D&RN	0.0100	Q(HL)	0.0010	1.0103
CLK	D&RN	0.0100	Q(LH)	0.0010	1.0971
RN	!CLK&!D	0.0100	Q(HL)	0.0010	0.7846
RN	!CLK&D	0.0100	Q(HL)	0.0010	0.8027
RN	CLK&!D	0.0100	Q(HL)	0.0010	1.0969
RN	CLK&D	0.0100	Q(HL)	0.0010	1.0969
D(HL)	!CLK&!RN	0.0100	n/a	n/a	0.3443
D(HL)	CLK&!RN	0.0100	n/a	n/a	0.0890

continues on next page

Table 197 – continued from previous page

D(HL)	!CLK&RN	0.0100	n/a	n/a	0.3265
D(HL)	CLK&RN	0.0100	n/a	n/a	0.0890
CLK(LH)	!D&!RN	0.0100	n/a	n/a	0.3147
CLK(LH)	D&!RN	0.0100	n/a	n/a	0.6734
CLK(LH)	!D&RN	0.0100	n/a	n/a	0.3147
CLK(LH)	D&RN	0.0100	n/a	n/a	0.3042
CLK(HL)	!D&!RN	0.0100	n/a	n/a	0.3933
CLK(HL)	D&!RN	0.0100	n/a	n/a	0.6021
CLK(HL)	!D&RN	0.0100	n/a	n/a	0.3932
CLK(HL)	D&RN	0.0100	n/a	n/a	0.3949
D(LH)	!CLK&!RN	0.0100	n/a	n/a	0.2135
D(LH)	CLK&!RN	0.0100	n/a	n/a	0.0063
D(LH)	!CLK&RN	0.0100	n/a	n/a	0.2254
D(LH)	CLK&RN	0.0100	n/a	n/a	0.0063
RN(HL)	!CLK&!D	0.0100	n/a	n/a	0.0962
RN(HL)	!CLK&D	0.0100	n/a	n/a	0.0957
RN(HL)	CLK&!D	0.0100	n/a	n/a	0.0989
RN(HL)	CLK&D	0.0100	n/a	n/a	0.0987
RN(LH)	!CLK&!D	0.0100	n/a	n/a	-0.0915
RN(LH)	!CLK&D	0.0100	n/a	n/a	-0.0865
RN(LH)	CLK&!D	0.0100	n/a	n/a	-0.0915
RN(LH)	CLK&D	0.0100	n/a	n/a	-0.0915

LEAKAGE POWER

When Condition	Power (nW)
!CLK&!D&!RN	0.4371
!CLK&D&!RN	0.4373
CLK&!D&!RN	0.4771
CLK&D&!RN	0.4799
!CLK&!D&RN	0.4374
!CLK&D&RN	0.5853
CLK&!D&RN	0.5269
CLK&D&RN	0.6673

gf180mcu_fd_sc_mcu9t5v0__dffrnq_4

gf180mcu_fd_sc_mcu9t5v0__dffrnq_4 symbol

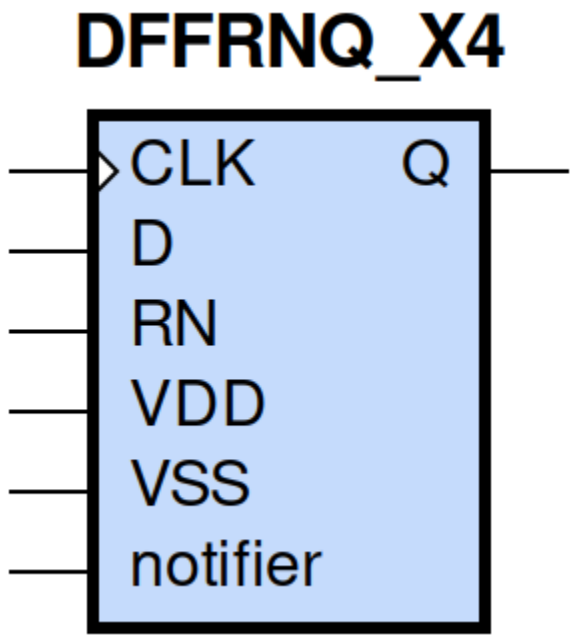

gf180mcu_fd_sc_mcu9t5v0__dffrnq_4 schematic

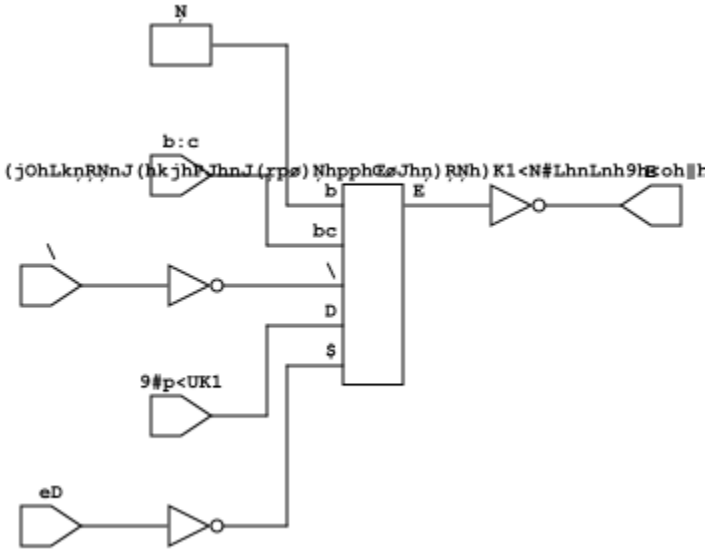

gf180mcu_fd_sc_mcu9t5v0__dffrnq_4 layout

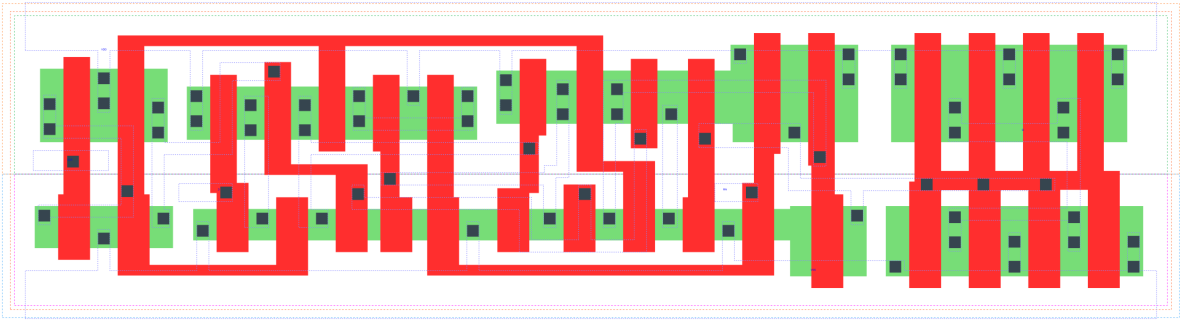

DFFRNQ_X4 is a positive edge triggered D-type flip flop with active low reset and 4X drive strength

Attributes

Attribute	Value
area	107.251200 μm^2

TRUTH TABLE

Input			Output
RN	D	CLK	Q
H	L	↑	L
H	H	↑	H
L	X	X	L

FUNCTIONAL SCHEMATIC

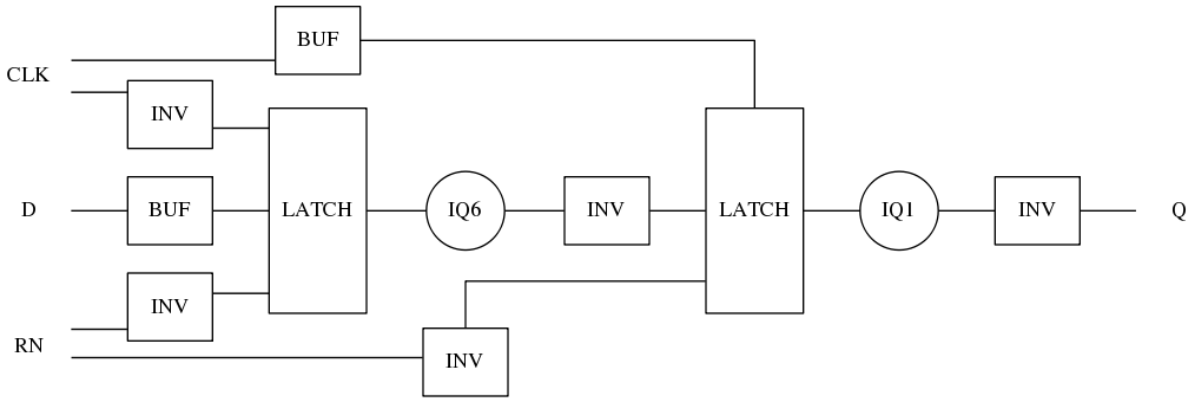

CONSTRAINTS

Constraint Pin	Related Pin	setup(ns)	hold(ns)
D(HL)	CLK(LH)	0.1720	0.0690
D(LH)	CLK(LH)	0.2230	-0.0570

Constraint Pin	Related Pin	recovery(ns)	removal(ns)
RN(LH)	CLK(LH)	-0.1770	0.3150

Constraint Pin	Related Pin	Minimum Pulse Width(ns)
CLK(HLH)	CLK(HL)	0.3390
CLK(HLH)	CLK(HL)	0.3390
CLK(LHL)	CLK(LH)	0.3980
CLK(LHL)	CLK(LH)	0.4950
RN(HLH)	RN(HL)	0.3190
RN(HLH)	RN(HL)	0.3190
RN(HLH)	RN(HL)	0.3680
RN(HLH)	RN(HL)	0.3680

PIN CAPACITANCE (pf)

Pin	Type	Capacitance (pf)
CLK	input	0.0052
D	input	0.0039
RN	input	0.0093

DELAY AND OUTPUT TRANSITION TIME corresponding to min slew and load

Input Pin	Output	When Condition	Tin (ns)	Out Load (pf)	Delay (ns)	Tout (ns)
CLK(LH)	Q(HL)	!D&RN	0.0100	0.0010	0.6148	0.0400
CLK(LH)	Q(LH)	D&RN	0.0100	0.0010	0.7695	0.0570
RN(HL)	Q(HL)	!CLK&!D	0.0100	0.0010	0.2378	0.0416
RN(HL)	Q(HL)	!CLK&D	0.0100	0.0010	0.2377	0.0415
RN(HL)	Q(HL)	CLK&!D	0.0100	0.0010	0.2376	0.0412
RN(HL)	Q(HL)	CLK&D	0.0100	0.0010	0.2376	0.0412

DYNAMIC ENERGY

Input Pin	When Condition	Tin (ns)	Output	Out Load (pf)	Energy (uW/MHz)
CLK	!D&RN	0.0100	Q(HL)	0.0010	1.5360
CLK	D&RN	0.0100	Q(LH)	0.0010	1.7984
RN	!CLK&!D	0.0100	Q(HL)	0.0010	1.3170
RN	!CLK&D	0.0100	Q(HL)	0.0010	1.3357
RN	CLK&!D	0.0100	Q(HL)	0.0010	1.6177
RN	CLK&D	0.0100	Q(HL)	0.0010	1.6178
D(HL)	!CLK&!RN	0.0100	n/a	n/a	0.3240
D(HL)	CLK&!RN	0.0100	n/a	n/a	0.0867
D(HL)	!CLK&RN	0.0100	n/a	n/a	0.3087
D(HL)	CLK&RN	0.0100	n/a	n/a	0.0867
CLK(LH)	!D&!RN	0.0100	n/a	n/a	0.3041
CLK(LH)	D&!RN	0.0100	n/a	n/a	0.6331
CLK(LH)	!D&RN	0.0100	n/a	n/a	0.3041
CLK(LH)	D&RN	0.0100	n/a	n/a	0.2957
CLK(HL)	!D&!RN	0.0100	n/a	n/a	0.3883
CLK(HL)	D&!RN	0.0100	n/a	n/a	0.5802
CLK(HL)	!D&RN	0.0100	n/a	n/a	0.3884
CLK(HL)	D&RN	0.0100	n/a	n/a	0.3894
D(LH)	!CLK&!RN	0.0100	n/a	n/a	0.2005
D(LH)	CLK&!RN	0.0100	n/a	n/a	0.0063
D(LH)	!CLK&RN	0.0100	n/a	n/a	0.2112
D(LH)	CLK&RN	0.0100	n/a	n/a	0.0063
RN(HL)	!CLK&!D	0.0100	n/a	n/a	0.0956
RN(HL)	!CLK&D	0.0100	n/a	n/a	0.0947
RN(HL)	CLK&!D	0.0100	n/a	n/a	0.0978

continues on next page

Table 198 – continued from previous page

RN(HL)	CLK&D	0.0100	n/a	n/a	0.0976
RN(LH)	!CLK&!D	0.0100	n/a	n/a	-0.0916
RN(LH)	!CLK&D	0.0100	n/a	n/a	-0.0866
RN(LH)	CLK&!D	0.0100	n/a	n/a	-0.0916
RN(LH)	CLK&D	0.0100	n/a	n/a	-0.0916

LEAKAGE POWER

When Condition	Power (nW)
!CLK&!D&!RN	0.4909
!CLK&D&!RN	0.4911
CLK&!D&!RN	0.5310
CLK&D&!RN	0.5337
!CLK&!D&RN	0.4912
!CLK&D&RN	0.6389
CLK&!D&RN	0.5719
CLK&D&RN	0.7187

gf180mcu_fd_sc_mcu9t5v0__dffrsnq_1

gf180mcu_fd_sc_mcu9t5v0__dffrsnq_1 symbol

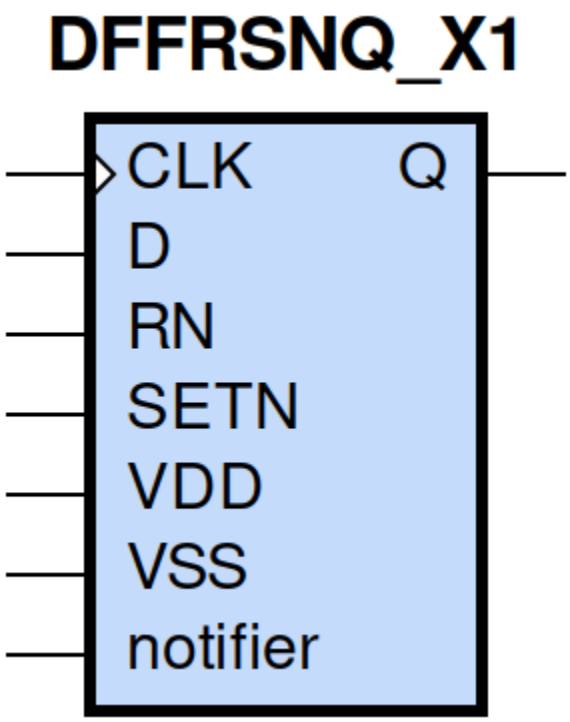

gf180mcu_fd_sc_mcu9t5v0__dffrsnq_1 schematic

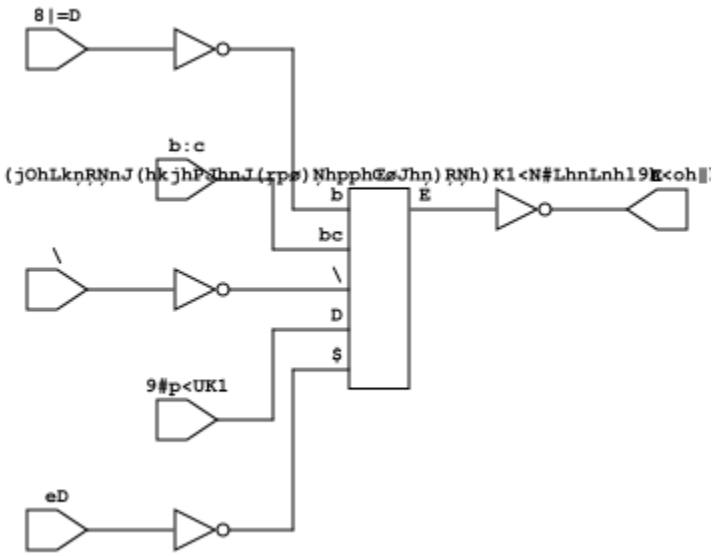

gf180mcu_fd_sc_mcu9t5v0__dffrsnq_1 layout

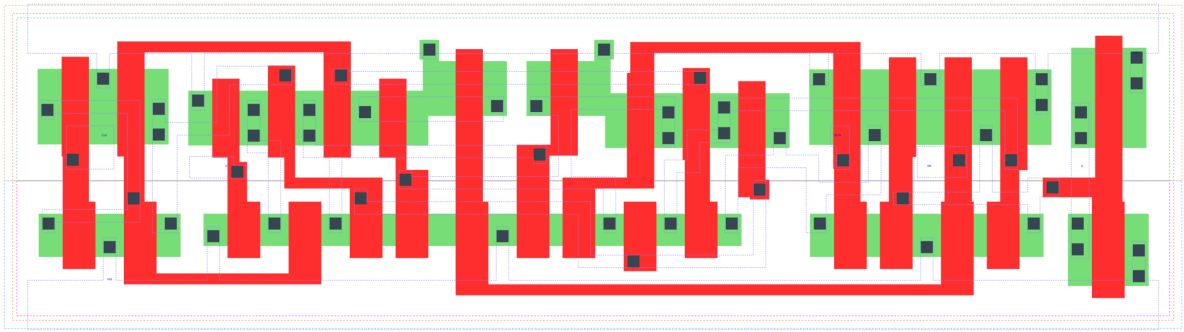

DFFRSNQ_X1 is a positive edge triggered D-type flip flop with active low set/reset and 1X drive strength

Attributes

Attribute	Value
area	104.428800 μm^2

TRUTH TABLE

Input				Output
RN	SETN	D	CLK	Q
H	H	L	↑	L
H	H	H	↑	H
L	H	X	X	L
H	L	X	X	H
L	L	X	X	L

FUNCTIONAL SCHEMATIC

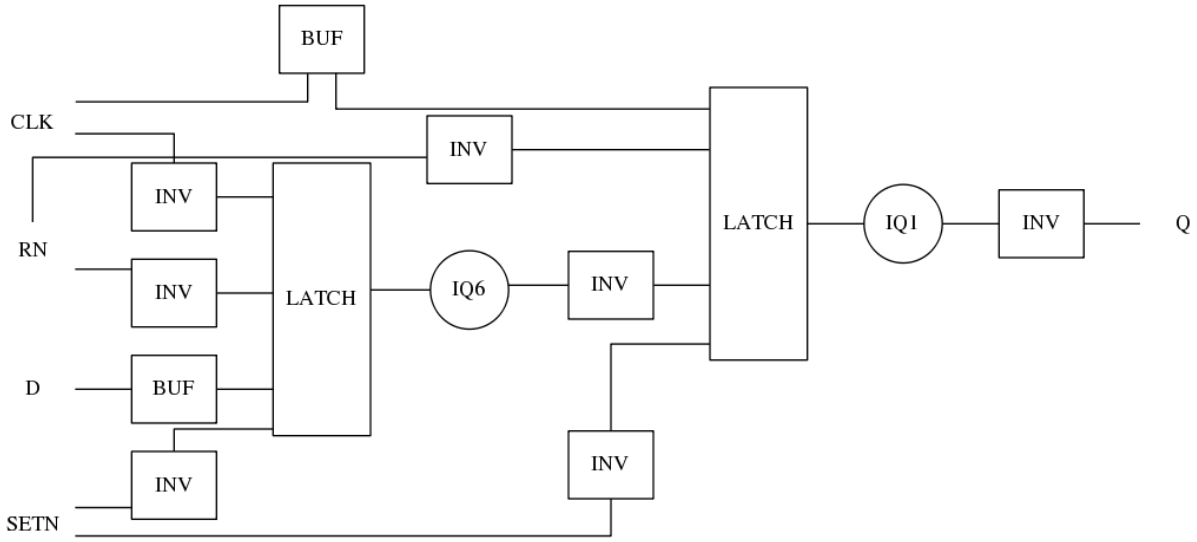

CONSTRAINTS

Constraint Pin	Related Pin	setup(ns)	hold(ns)
D(HL)	CLK(LH)	0.2230	0.0740
D(LH)	CLK(LH)	0.2920	-0.0520
SETN(LH)	RN(LH)	-0.0110	0.0740
SETN(LH)	RN(LH)	-0.0400	0.0970
SETN(LH)	RN(LH)	-0.0110	0.0740
SETN(LH)	RN(LH)	-0.0400	0.0970
RN(LH)	SETN(LH)	0.0740	-0.0110
RN(LH)	SETN(LH)	0.0970	-0.0400
RN(LH)	SETN(LH)	0.0740	-0.0110
RN(LH)	SETN(LH)	0.0970	-0.0400

Constraint Pin	Related Pin	recovery(ns)	removal(ns)
SETN(LH)	CLK(LH)	0.0110	0.2290
RN(LH)	CLK(LH)	-0.2060	0.3550

Constraint Pin	Related Pin	Minimum Pulse Width(ns)
CLK(HLH)	CLK(HL)	0.4060
CLK(HLH)	CLK(HL)	0.4180
CLK(LHL)	CLK(LH)	0.3780
CLK(LHL)	CLK(LH)	0.3780
SETN(HLH)	SETN(HL)	0.3100
SETN(HLH)	SETN(HL)	0.3880
SETN(HLH)	SETN(HL)	0.3100
SETN(HLH)	SETN(HL)	0.3880
RN(HLH)	RN(HL)	0.2800
RN(HLH)	RN(HL)	0.3880
RN(HLH)	RN(HL)	0.2800
RN(HLH)	RN(HL)	0.3880

PIN CAPACITANCE (pf)

Pin	Type	Capacitance (pf)
CLK	input	0.0051
D	input	0.0039
SETN	input	0.0096
RN	input	0.0100

DELAY AND OUTPUT TRANSITION TIME corresponding to min slew and load

Input Pin	Output	When Condition	Tin (ns)	Out Load (pf)	Delay (ns)	Tout (ns)
CLK(LH)	Q(HL)	!D&RN&SETN	0.0100	0.0010	0.5870	0.0374
CLK(LH)	Q(LH)	D&RN&SETN	0.0100	0.0010	0.5942	0.0456
SETN(HL)	Q(LH)	!CLK&!D&RN	0.0100	0.0010	0.4581	0.0445
SETN(HL)	Q(LH)	CLK&!D&RN	0.0100	0.0010	0.5546	0.0450
SETN(HL)	Q(LH)	!CLK&D&RN	0.0100	0.0010	0.4585	0.0444
SETN(HL)	Q(LH)	CLK&D&RN	0.0100	0.0010	0.5545	0.0449
RN(HL)	Q(HL)	!CLK&!D&SETN	0.0100	0.0010	0.1789	0.0355
RN(HL)	Q(HL)	CLK&!D&SETN	0.0100	0.0010	0.1792	0.0355
RN(HL)	Q(HL)	!CLK&D&SETN	0.0100	0.0010	0.1789	0.0356
RN(HL)	Q(HL)	CLK&D&SETN	0.0100	0.0010	0.1791	0.0354
RN(HL)	Q(HL)	!CLK&!D&!SETN	0.0100	0.0010	0.1789	0.0350
RN(HL)	Q(HL)	!CLK&D&!SETN	0.0100	0.0010	0.1789	0.0350
RN(HL)	Q(HL)	CLK&!D&!SETN	0.0100	0.0010	0.1790	0.0350
RN(HL)	Q(HL)	CLK&D&!SETN	0.0100	0.0010	0.1790	0.0350
RN(LH)	Q(LH)	!CLK&!D&!SETN	0.0100	0.0010	0.2463	0.0433
RN(LH)	Q(LH)	!CLK&D&!SETN	0.0100	0.0010	0.2463	0.0432
RN(LH)	Q(LH)	CLK&!D&!SETN	0.0100	0.0010	0.2486	0.0433
RN(LH)	Q(LH)	CLK&D&!SETN	0.0100	0.0010	0.2486	0.0433

DYNAMIC ENERGY

Input Pin	When Condition	Tin (ns)	Output	Out Load (pf)	Energy (uW/MHz)
CLK	!D&RN&SETN	0.0100	Q(HL)	0.0010	0.8701
CLK	D&RN&SETN	0.0100	Q(LH)	0.0010	0.9328
SETN	!CLK&!D&RN	0.0100	Q(LH)	0.0010	0.7517
SETN	CLK&!D&RN	0.0100	Q(LH)	0.0010	0.9020
SETN	!CLK&D&RN	0.0100	Q(LH)	0.0010	0.6170
SETN	CLK&D&RN	0.0100	Q(LH)	0.0010	0.9018
RN	!CLK&!D&SETN	0.0100	Q(HL)	0.0010	0.5829
RN	CLK&!D&SETN	0.0100	Q(HL)	0.0010	0.8814
RN	!CLK&D&SETN	0.0100	Q(HL)	0.0010	0.5832
RN	CLK&D&SETN	0.0100	Q(HL)	0.0010	0.8805
RN	!CLK&!D&!SETN	0.0100	Q(HL)	0.0010	0.3843
RN	!CLK&D&!SETN	0.0100	Q(HL)	0.0010	0.3820
RN	CLK&!D&!SETN	0.0100	Q(HL)	0.0010	0.5651
RN	CLK&D&!SETN	0.0100	Q(HL)	0.0010	0.5651
RN	!CLK&!D&!SETN	0.0100	Q(LH)	0.0010	0.2217
RN	!CLK&D&!SETN	0.0100	Q(LH)	0.0010	0.2238
RN	CLK&!D&!SETN	0.0100	Q(LH)	0.0010	0.3623
RN	CLK&D&!SETN	0.0100	Q(LH)	0.0010	0.3623
SETN(HL)	!CLK&!D&!RN	0.0100	n/a	n/a	0.4299
SETN(HL)	!CLK&D&!RN	0.0100	n/a	n/a	0.3055
SETN(HL)	CLK&!D&!RN	0.0100	n/a	n/a	0.4315
SETN(HL)	CLK&D&!RN	0.0100	n/a	n/a	0.4315
SETN(HL)	!CLK&!D&RN	0.0100	n/a	n/a	0.2186
SETN(HL)	CLK&!D&RN	0.0100	n/a	n/a	0.0845

continues on next page

Table 199 – continued from previous page

SETN(HL)	!CLK&D&RN	0.0100	n/a	n/a	0.0844
SETN(HL)	CLK&D&RN	0.0100	n/a	n/a	0.0845
D(HL)	!CLK&!RN&!SETN	0.0100	n/a	n/a	0.2144
D(HL)	!CLK&!RN&SETN	0.0100	n/a	n/a	0.3317
D(HL)	CLK&!RN&!SETN	0.0100	n/a	n/a	0.0840
D(HL)	CLK&!RN&SETN	0.0100	n/a	n/a	0.0840
D(HL)	!CLK&RN&!SETN	0.0100	n/a	n/a	0.2144
D(HL)	CLK&RN&!SETN	0.0100	n/a	n/a	0.0840
D(HL)	!CLK&RN&SETN	0.0100	n/a	n/a	0.3187
D(HL)	CLK&RN&SETN	0.0100	n/a	n/a	0.0840
CLK(LH)	!D&!RN&!SETN	0.0100	n/a	n/a	0.3344
CLK(LH)	!D&!RN&SETN	0.0100	n/a	n/a	0.3154
CLK(LH)	D&!RN&!SETN	0.0100	n/a	n/a	0.4537
CLK(LH)	D&!RN&SETN	0.0100	n/a	n/a	0.6578
CLK(LH)	!D&RN&!SETN	0.0100	n/a	n/a	0.4254
CLK(LH)	D&RN&!SETN	0.0100	n/a	n/a	0.3360
CLK(LH)	!D&RN&SETN	0.0100	n/a	n/a	0.3154
CLK(LH)	D&RN&SETN	0.0100	n/a	n/a	0.3362
CLK(HL)	!D&!RN&!SETN	0.0100	n/a	n/a	0.4175
CLK(HL)	!D&!RN&SETN	0.0100	n/a	n/a	0.4108
CLK(HL)	D&!RN&!SETN	0.0100	n/a	n/a	0.4931
CLK(HL)	D&!RN&SETN	0.0100	n/a	n/a	0.6499
CLK(HL)	!D&RN&!SETN	0.0100	n/a	n/a	0.5879
CLK(HL)	D&RN&!SETN	0.0100	n/a	n/a	0.4119
CLK(HL)	!D&RN&SETN	0.0100	n/a	n/a	0.4108
CLK(HL)	D&RN&SETN	0.0100	n/a	n/a	0.4118
D(LH)	!CLK&!RN&!SETN	0.0100	n/a	n/a	0.0847
D(LH)	!CLK&!RN&SETN	0.0100	n/a	n/a	0.2448
D(LH)	CLK&!RN&!SETN	0.0100	n/a	n/a	0.0063
D(LH)	CLK&!RN&SETN	0.0100	n/a	n/a	0.0063
D(LH)	!CLK&RN&!SETN	0.0100	n/a	n/a	0.0847
D(LH)	CLK&RN&!SETN	0.0100	n/a	n/a	0.0063
D(LH)	!CLK&RN&SETN	0.0100	n/a	n/a	0.2545
D(LH)	CLK&RN&SETN	0.0100	n/a	n/a	0.0063
RN(HL)	!CLK&!D&SETN	0.0100	n/a	n/a	0.0808
RN(HL)	CLK&!D&SETN	0.0100	n/a	n/a	0.0831
RN(HL)	!CLK&D&SETN	0.0100	n/a	n/a	0.0799
RN(HL)	CLK&D&SETN	0.0100	n/a	n/a	0.0829
RN(LH)	!CLK&!D&SETN	0.0100	n/a	n/a	-0.0766
RN(LH)	!CLK&D&SETN	0.0100	n/a	n/a	-0.0716
RN(LH)	CLK&!D&SETN	0.0100	n/a	n/a	-0.0766
RN(LH)	CLK&D&SETN	0.0100	n/a	n/a	-0.0766
SETN(LH)	!CLK&!D&!RN	0.0100	n/a	n/a	0.1979
SETN(LH)	!CLK&D&!RN	0.0100	n/a	n/a	0.0989
SETN(LH)	CLK&!D&!RN	0.0100	n/a	n/a	0.1882
SETN(LH)	CLK&D&!RN	0.0100	n/a	n/a	0.1882
SETN(LH)	!CLK&!D&RN	0.0100	n/a	n/a	0.0252
SETN(LH)	!CLK&D&RN	0.0100	n/a	n/a	-0.0613
SETN(LH)	CLK&!D&RN	0.0100	n/a	n/a	-0.0613
SETN(LH)	CLK&D&RN	0.0100	n/a	n/a	-0.0613

LEAKAGE POWER

When Condition	Power (nW)
!CLK&!D&!RN&!SETN	0.4459
!CLK&!D&!RN&SETN	0.4634
!CLK&D&!RN&!SETN	0.4477
!CLK&D&!RN&SETN	0.4774
CLK&!D&!RN&!SETN	0.5255
CLK&!D&!RN&SETN	0.5036
CLK&D&!RN&!SETN	0.5282
CLK&D&!RN&SETN	0.5063
CLK&D&RN&SETN	0.8019
!CLK&!D&RN&!SETN	0.4324
!CLK&D&RN&!SETN	0.4340
CLK&!D&RN&!SETN	0.4895
CLK&D&RN&!SETN	0.4913
!CLK&!D&RN&SETN	0.6846
!CLK&D&RN&SETN	0.6512
CLK&!D&RN&SETN	0.5444

gf180mcu_fd_sc_mcu9t5v0__dffrsnq_2

gf180mcu_fd_sc_mcu9t5v0__dffrsnq_2 symbol

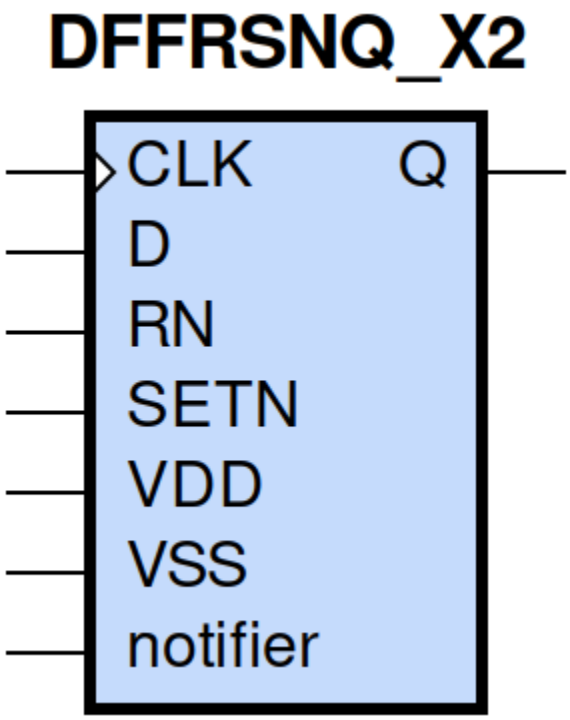

gf180mcu_fd_sc_mcu9t5v0__dffrsnq_2 schematic

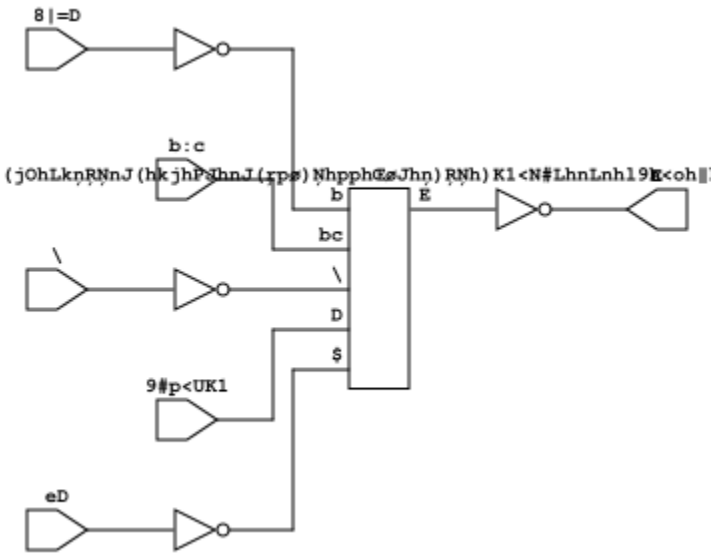

gf180mcu_fd_sc_mcu9t5v0__dffrsnq_2 layout

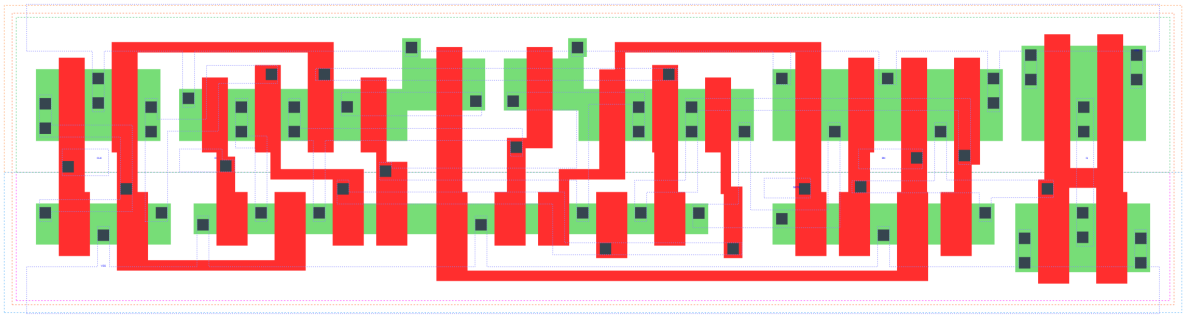

DFFRSNQ_X2 is a positive edge triggered D-type flip flop with active low set/reset and 2X drive strength

Attributes

Attribute	Value
area	110.073600 μm^2

TRUTH TABLE

Input				Output
RN	SETN	D	CLK	Q
H	H	L	↑	L
H	H	H	↑	H
L	H	X	X	L
H	L	X	X	H
L	L	X	X	L

FUNCTIONAL SCHEMATIC

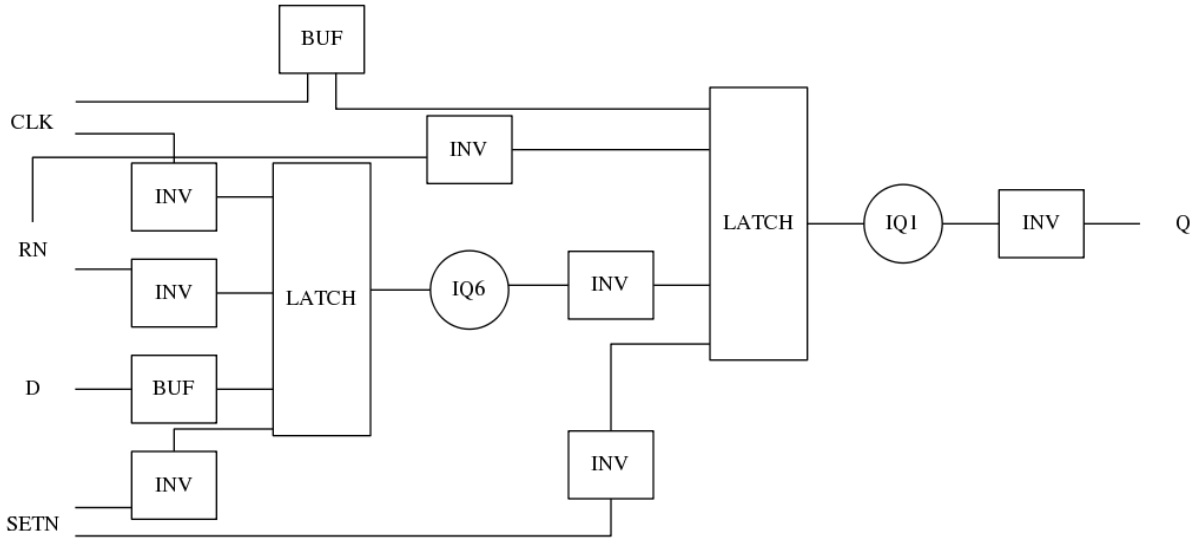

CONSTRAINTS

Constraint Pin	Related Pin	setup(ns)	hold(ns)
D(HL)	CLK(LH)	0.2230	0.0800
D(LH)	CLK(LH)	0.2980	-0.0520
SETN(LH)	RN(LH)	-0.0460	0.1260
SETN(LH)	RN(LH)	-0.0460	0.1260
SETN(LH)	RN(LH)	-0.0460	0.1260
SETN(LH)	RN(LH)	-0.0460	0.1260
RN(LH)	SETN(LH)	0.1260	-0.0460
RN(LH)	SETN(LH)	0.1260	-0.0460
RN(LH)	SETN(LH)	0.1260	-0.0460
RN(LH)	SETN(LH)	0.1260	-0.0460

Constraint Pin	Related Pin	recovery(ns)	removal(ns)
SETN(LH)	CLK(LH)	0.0170	0.2290
RN(LH)	CLK(LH)	-0.1890	0.3550

Constraint Pin	Related Pin	Minimum Pulse Width(ns)
CLK(HLH)	CLK(HL)	0.4060
CLK(HLH)	CLK(HL)	0.4310
CLK(LHL)	CLK(LH)	0.4270
CLK(LHL)	CLK(LH)	0.4170
SETN(HLH)	SETN(HL)	0.3490
SETN(HLH)	SETN(HL)	0.4070
SETN(HLH)	SETN(HL)	0.3490
SETN(HLH)	SETN(HL)	0.4070
RN(HLH)	RN(HL)	0.2800
RN(HLH)	RN(HL)	0.3880
RN(HLH)	RN(HL)	0.2800
RN(HLH)	RN(HL)	0.3880

PIN CAPACITANCE (pf)

Pin	Type	Capacitance (pf)
CLK	input	0.0051
D	input	0.0039
SETN	input	0.0095
RN	input	0.0100

DELAY AND OUTPUT TRANSITION TIME corresponding to min slew and load

Input Pin	Output	When Condition	Tin (ns)	Out Load (pf)	Delay (ns)	Tout (ns)
CLK(LH)	Q(HL)	!D&RN&SETN	0.0100	0.0010	0.6201	0.0376
CLK(LH)	Q(LH)	D&RN&SETN	0.0100	0.0010	0.6464	0.0430
SETN(HL)	Q(LH)	!CLK&!D&RN	0.0100	0.0010	0.5079	0.0419
SETN(HL)	Q(LH)	CLK&!D&RN	0.0100	0.0010	0.6039	0.0426
SETN(HL)	Q(LH)	!CLK&D&RN	0.0100	0.0010	0.5081	0.0419
SETN(HL)	Q(LH)	CLK&D&RN	0.0100	0.0010	0.6039	0.0426
RN(HL)	Q(HL)	!CLK&!D&SETN	0.0100	0.0010	0.2068	0.0359
RN(HL)	Q(HL)	CLK&!D&SETN	0.0100	0.0010	0.2068	0.0358
RN(HL)	Q(HL)	!CLK&D&SETN	0.0100	0.0010	0.2068	0.0359
RN(HL)	Q(HL)	CLK&D&SETN	0.0100	0.0010	0.2068	0.0359
RN(HL)	Q(HL)	!CLK&!D&!SETN	0.0100	0.0010	0.2066	0.0353
RN(HL)	Q(HL)	!CLK&D&!SETN	0.0100	0.0010	0.2066	0.0353
RN(HL)	Q(HL)	CLK&!D&!SETN	0.0100	0.0010	0.2066	0.0352
RN(HL)	Q(HL)	CLK&D&!SETN	0.0100	0.0010	0.2066	0.0352
RN(LH)	Q(LH)	!CLK&!D&!SETN	0.0100	0.0010	0.2935	0.0413
RN(LH)	Q(LH)	!CLK&D&!SETN	0.0100	0.0010	0.2935	0.0413
RN(LH)	Q(LH)	CLK&!D&!SETN	0.0100	0.0010	0.2968	0.0416
RN(LH)	Q(LH)	CLK&D&!SETN	0.0100	0.0010	0.2968	0.0416

DYNAMIC ENERGY

Input Pin	When Condition	Tin (ns)	Output	Out Load (pf)	Energy (uW/MHz)
CLK	!D&RN&SETN	0.0100	Q(HL)	0.0010	1.0945
CLK	D&RN&SETN	0.0100	Q(LH)	0.0010	1.1630
SETN	!CLK&!D&RN	0.0100	Q(LH)	0.0010	0.9563
SETN	CLK&!D&RN	0.0100	Q(LH)	0.0010	1.1079
SETN	!CLK&D&RN	0.0100	Q(LH)	0.0010	0.8242
SETN	CLK&D&RN	0.0100	Q(LH)	0.0010	1.1080
RN	!CLK&!D&SETN	0.0100	Q(HL)	0.0010	0.7971
RN	CLK&!D&SETN	0.0100	Q(HL)	0.0010	1.1042
RN	!CLK&D&SETN	0.0100	Q(HL)	0.0010	0.7974
RN	CLK&D&SETN	0.0100	Q(HL)	0.0010	1.1034
RN	!CLK&!D&!SETN	0.0100	Q(HL)	0.0010	0.5875
RN	!CLK&D&!SETN	0.0100	Q(HL)	0.0010	0.5852
RN	CLK&!D&!SETN	0.0100	Q(HL)	0.0010	0.7703
RN	CLK&D&!SETN	0.0100	Q(HL)	0.0010	0.7703
RN	!CLK&!D&!SETN	0.0100	Q(LH)	0.0010	0.4268
RN	!CLK&D&!SETN	0.0100	Q(LH)	0.0010	0.4290
RN	CLK&!D&!SETN	0.0100	Q(LH)	0.0010	0.5683
RN	CLK&D&!SETN	0.0100	Q(LH)	0.0010	0.5683
SETN(HL)	!CLK&!D&!RN	0.0100	n/a	n/a	0.4256
SETN(HL)	!CLK&D&!RN	0.0100	n/a	n/a	0.3033
SETN(HL)	CLK&!D&!RN	0.0100	n/a	n/a	0.4277
SETN(HL)	CLK&D&!RN	0.0100	n/a	n/a	0.4277
SETN(HL)	!CLK&!D&RN	0.0100	n/a	n/a	0.2164
SETN(HL)	CLK&!D&RN	0.0100	n/a	n/a	0.0845

continues on next page

Table 200 – continued from previous page

SETN(HL)	!CLK&D&RN	0.0100	n/a	n/a	0.0844
SETN(HL)	CLK&D&RN	0.0100	n/a	n/a	0.0845
D(HL)	!CLK&!RN&!SETN	0.0100	n/a	n/a	0.2131
D(HL)	!CLK&!RN&SETN	0.0100	n/a	n/a	0.3301
D(HL)	CLK&!RN&!SETN	0.0100	n/a	n/a	0.0837
D(HL)	CLK&!RN&SETN	0.0100	n/a	n/a	0.0837
D(HL)	!CLK&RN&!SETN	0.0100	n/a	n/a	0.2131
D(HL)	CLK&RN&!SETN	0.0100	n/a	n/a	0.0837
D(HL)	!CLK&RN&SETN	0.0100	n/a	n/a	0.3172
D(HL)	CLK&RN&SETN	0.0100	n/a	n/a	0.0837
CLK(LH)	!D&!RN&!SETN	0.0100	n/a	n/a	0.3346
CLK(LH)	!D&!RN&SETN	0.0100	n/a	n/a	0.3148
CLK(LH)	D&!RN&!SETN	0.0100	n/a	n/a	0.4529
CLK(LH)	D&!RN&SETN	0.0100	n/a	n/a	0.6564
CLK(LH)	!D&RN&!SETN	0.0100	n/a	n/a	0.4248
CLK(LH)	D&RN&!SETN	0.0100	n/a	n/a	0.3356
CLK(LH)	!D&RN&SETN	0.0100	n/a	n/a	0.3146
CLK(LH)	D&RN&SETN	0.0100	n/a	n/a	0.3354
CLK(HL)	!D&!RN&!SETN	0.0100	n/a	n/a	0.4178
CLK(HL)	!D&!RN&SETN	0.0100	n/a	n/a	0.4111
CLK(HL)	D&!RN&!SETN	0.0100	n/a	n/a	0.4934
CLK(HL)	D&!RN&SETN	0.0100	n/a	n/a	0.6481
CLK(HL)	!D&RN&!SETN	0.0100	n/a	n/a	0.5874
CLK(HL)	D&RN&!SETN	0.0100	n/a	n/a	0.4123
CLK(HL)	!D&RN&SETN	0.0100	n/a	n/a	0.4110
CLK(HL)	D&RN&SETN	0.0100	n/a	n/a	0.4123
D(LH)	!CLK&!RN&!SETN	0.0100	n/a	n/a	0.0846
D(LH)	!CLK&!RN&SETN	0.0100	n/a	n/a	0.2426
D(LH)	CLK&!RN&!SETN	0.0100	n/a	n/a	0.0062
D(LH)	CLK&!RN&SETN	0.0100	n/a	n/a	0.0062
D(LH)	!CLK&RN&!SETN	0.0100	n/a	n/a	0.0846
D(LH)	CLK&RN&!SETN	0.0100	n/a	n/a	0.0062
D(LH)	!CLK&RN&SETN	0.0100	n/a	n/a	0.2522
D(LH)	CLK&RN&SETN	0.0100	n/a	n/a	0.0062
RN(HL)	!CLK&!D&SETN	0.0100	n/a	n/a	0.0808
RN(HL)	CLK&!D&SETN	0.0100	n/a	n/a	0.0831
RN(HL)	!CLK&D&SETN	0.0100	n/a	n/a	0.0796
RN(HL)	CLK&D&SETN	0.0100	n/a	n/a	0.0829
RN(LH)	!CLK&!D&SETN	0.0100	n/a	n/a	-0.0766
RN(LH)	!CLK&D&SETN	0.0100	n/a	n/a	-0.0714
RN(LH)	CLK&!D&SETN	0.0100	n/a	n/a	-0.0766
RN(LH)	CLK&D&SETN	0.0100	n/a	n/a	-0.0766
SETN(LH)	!CLK&!D&!RN	0.0100	n/a	n/a	0.1977
SETN(LH)	!CLK&D&!RN	0.0100	n/a	n/a	0.0989
SETN(LH)	CLK&!D&!RN	0.0100	n/a	n/a	0.1881
SETN(LH)	CLK&D&!RN	0.0100	n/a	n/a	0.1881
SETN(LH)	!CLK&!D&RN	0.0100	n/a	n/a	0.0252
SETN(LH)	!CLK&D&RN	0.0100	n/a	n/a	-0.0613
SETN(LH)	CLK&!D&RN	0.0100	n/a	n/a	-0.0613
SETN(LH)	CLK&D&RN	0.0100	n/a	n/a	-0.0613

LEAKAGE POWER

When Condition	Power (nW)
!CLK&!D&!RN&!SETN	0.4728
!CLK&!D&!RN&SETN	0.4903
!CLK&D&!RN&!SETN	0.4745
!CLK&D&!RN&SETN	0.5042
CLK&!D&!RN&!SETN	0.5524
CLK&!D&!RN&SETN	0.5304
CLK&D&!RN&!SETN	0.5551
CLK&D&!RN&SETN	0.5331
CLK&D&RN&SETN	0.8286
!CLK&!D&RN&!SETN	0.4580
!CLK&D&RN&!SETN	0.4595
CLK&!D&RN&!SETN	0.5151
CLK&D&RN&!SETN	0.5168
!CLK&!D&RN&SETN	0.7100
!CLK&D&RN&SETN	0.6766
CLK&!D&RN&SETN	0.5713

gf180mcu_fd_sc_mcu9t5v0__dffrsnq_4

gf180mcu_fd_sc_mcu9t5v0__dffrsnq_4 symbol

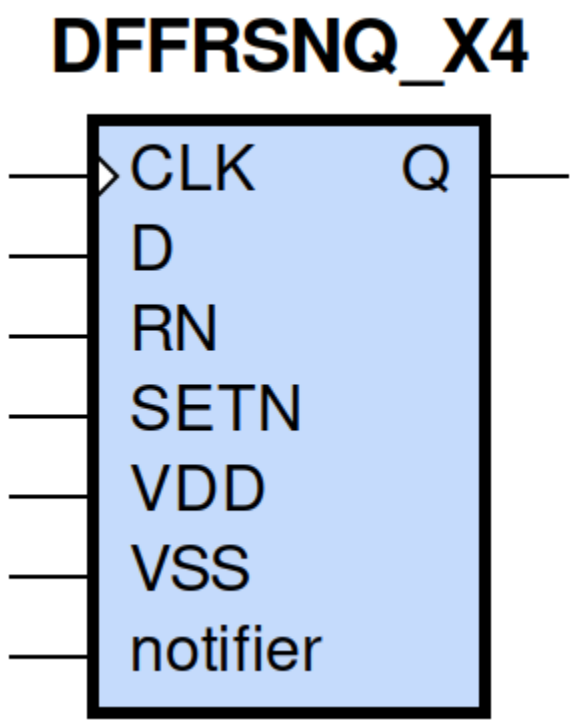

gf180mcu_fd_sc_mcu9t5v0__dffrsnq_4 schematic

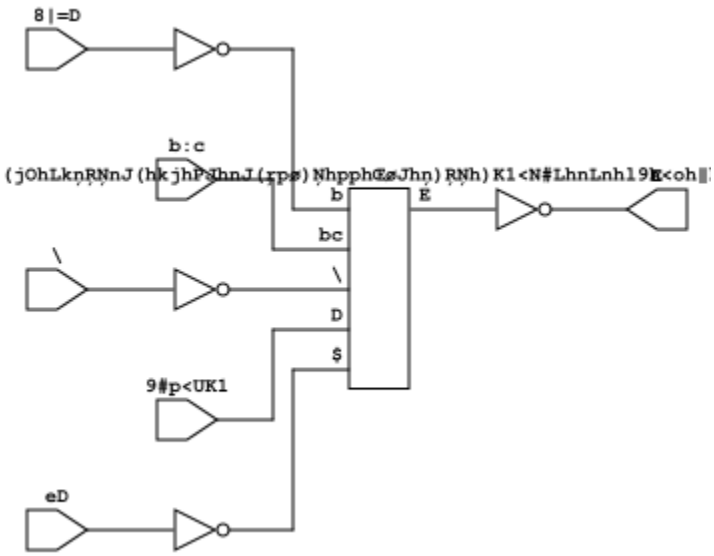

gf180mcu_fd_sc_mcu9t5v0__dffrsnq_4 layout

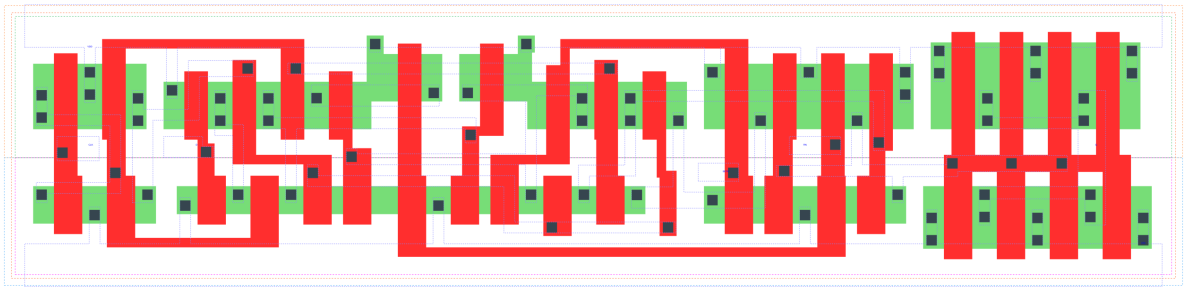

DFFRSNQ_X4 is a positive edge triggered D-type flip flop with active low set/reset and 4X drive strength

Attributes

Attribute	Value
area	121.363200 μm^2

TRUTH TABLE

Input				Output
RN	SETN	D	CLK	Q
H	H	L	↑	L
H	H	H	↑	H
L	H	X	X	L
H	L	X	X	H
L	L	X	X	L

FUNCTIONAL SCHEMATIC

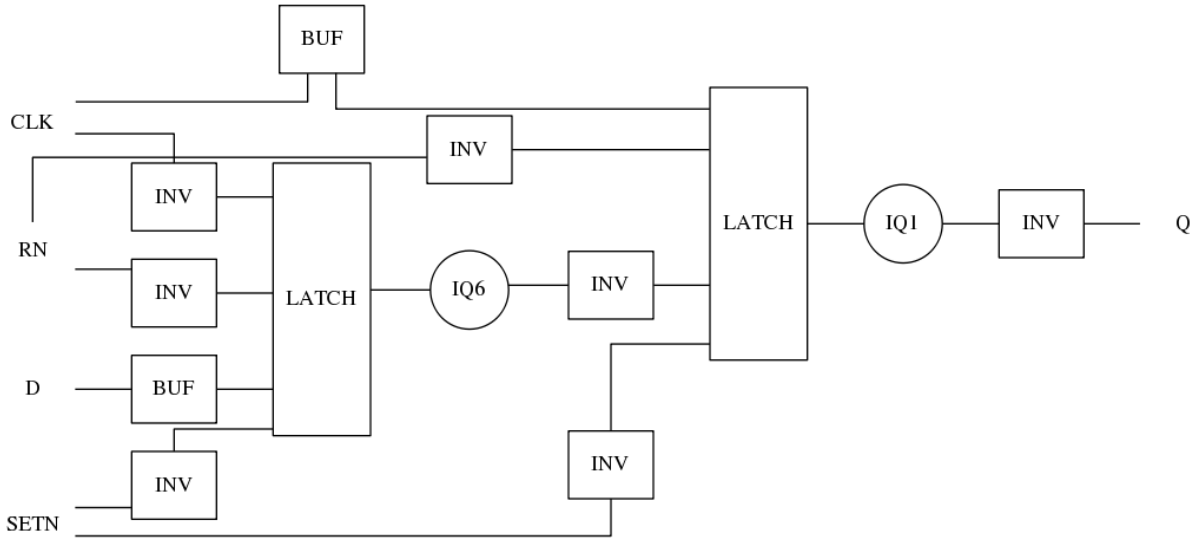

CONSTRAINTS

Constraint Pin	Related Pin	setup(ns)	hold(ns)
D(HL)	CLK(LH)	0.2180	0.0800
D(LH)	CLK(LH)	0.2920	-0.0520
SETN(LH)	RN(LH)	-0.1200	0.2290
SETN(LH)	RN(LH)	-0.0460	0.1720
SETN(LH)	RN(LH)	-0.1200	0.2290
SETN(LH)	RN(LH)	-0.0460	0.1720
RN(LH)	SETN(LH)	0.2290	-0.1200
RN(LH)	SETN(LH)	0.1720	-0.0460
RN(LH)	SETN(LH)	0.2290	-0.1200
RN(LH)	SETN(LH)	0.1720	-0.0460

Constraint Pin	Related Pin	recovery(ns)	removal(ns)
SETN(LH)	CLK(LH)	0.0110	0.2290
RN(LH)	CLK(LH)	-0.1890	0.3550

Constraint Pin	Related Pin	Minimum Pulse Width(ns)
CLK(HLH)	CLK(HL)	0.4060
CLK(HLH)	CLK(HL)	0.4180
CLK(LHL)	CLK(LH)	0.5050
CLK(LHL)	CLK(LH)	0.5150
SETN(HLH)	SETN(HL)	0.4370
SETN(HLH)	SETN(HL)	0.4270
SETN(HLH)	SETN(HL)	0.4460
SETN(HLH)	SETN(HL)	0.4270
RN(HLH)	RN(HL)	0.3980
RN(HLH)	RN(HL)	0.3980
RN(HLH)	RN(HL)	0.3980
RN(HLH)	RN(HL)	0.3880

PIN CAPACITANCE (pf)

Pin	Type	Capacitance (pf)
CLK	input	0.0051
D	input	0.0039
SETN	input	0.0095
RN	input	0.0100

DELAY AND OUTPUT TRANSITION TIME corresponding to min slew and load

Input Pin	Output	When Condition	Tin (ns)	Out Load (pf)	Delay (ns)	Tout (ns)
CLK(LH)	Q(HL)	!D&RN&SETN	0.0100	0.0010	0.7150	0.0510
CLK(LH)	Q(LH)	D&RN&SETN	0.0100	0.0010	0.7834	0.0569
SETN(HL)	Q(LH)	!CLK&!D&RN	0.0100	0.0010	0.6411	0.0556
SETN(HL)	Q(LH)	CLK&!D&RN	0.0100	0.0010	0.7373	0.0563
SETN(HL)	Q(LH)	!CLK&D&RN	0.0100	0.0010	0.6413	0.0555
SETN(HL)	Q(LH)	CLK&D&RN	0.0100	0.0010	0.7373	0.0559
RN(HL)	Q(HL)	!CLK&!D&SETN	0.0100	0.0010	0.2940	0.0505
RN(HL)	Q(HL)	CLK&!D&SETN	0.0100	0.0010	0.2937	0.0505
RN(HL)	Q(HL)	!CLK&D&SETN	0.0100	0.0010	0.2939	0.0505
RN(HL)	Q(HL)	CLK&D&SETN	0.0100	0.0010	0.2938	0.0505
RN(HL)	Q(HL)	!CLK&!D&!SETN	0.0100	0.0010	0.2929	0.0496
RN(HL)	Q(HL)	!CLK&D&!SETN	0.0100	0.0010	0.2929	0.0496
RN(HL)	Q(HL)	CLK&!D&!SETN	0.0100	0.0010	0.2928	0.0494
RN(HL)	Q(HL)	CLK&D&!SETN	0.0100	0.0010	0.2928	0.0494
RN(LH)	Q(LH)	!CLK&!D&!SETN	0.0100	0.0010	0.4236	0.0552
RN(LH)	Q(LH)	!CLK&D&!SETN	0.0100	0.0010	0.4236	0.0552
RN(LH)	Q(LH)	CLK&!D&!SETN	0.0100	0.0010	0.4284	0.0558
RN(LH)	Q(LH)	CLK&D&!SETN	0.0100	0.0010	0.4284	0.0558

DYNAMIC ENERGY

Input Pin	When Condition	Tin (ns)	Output	Out Load (pf)	Energy (uW/MHz)
CLK	!D&RN&SETN	0.0100	Q(HL)	0.0010	1.7560
CLK	D&RN&SETN	0.0100	Q(LH)	0.0010	1.8777
SETN	!CLK&!D&RN	0.0100	Q(LH)	0.0010	1.6171
SETN	CLK&!D&RN	0.0100	Q(LH)	0.0010	1.7685
SETN	!CLK&D&RN	0.0100	Q(LH)	0.0010	1.4851
SETN	CLK&D&RN	0.0100	Q(LH)	0.0010	1.7682
RN	!CLK&!D&SETN	0.0100	Q(HL)	0.0010	1.4458
RN	CLK&!D&SETN	0.0100	Q(HL)	0.0010	1.7694
RN	!CLK&D&SETN	0.0100	Q(HL)	0.0010	1.4466
RN	CLK&D&SETN	0.0100	Q(HL)	0.0010	1.7683
RN	!CLK&!D&!SETN	0.0100	Q(HL)	0.0010	1.2078
RN	!CLK&D&!SETN	0.0100	Q(HL)	0.0010	1.2055
RN	CLK&!D&!SETN	0.0100	Q(HL)	0.0010	1.3907
RN	CLK&D&!SETN	0.0100	Q(HL)	0.0010	1.3907
RN	!CLK&!D&!SETN	0.0100	Q(LH)	0.0010	1.0861
RN	!CLK&D&!SETN	0.0100	Q(LH)	0.0010	1.0882
RN	CLK&!D&!SETN	0.0100	Q(LH)	0.0010	1.2309
RN	CLK&D&!SETN	0.0100	Q(LH)	0.0010	1.2309
SETN(HL)	!CLK&!D&!RN	0.0100	n/a	n/a	0.4258
SETN(HL)	!CLK&D&!RN	0.0100	n/a	n/a	0.3036
SETN(HL)	CLK&!D&!RN	0.0100	n/a	n/a	0.4280
SETN(HL)	CLK&D&!RN	0.0100	n/a	n/a	0.4280
SETN(HL)	!CLK&!D&RN	0.0100	n/a	n/a	0.2164
SETN(HL)	CLK&!D&RN	0.0100	n/a	n/a	0.0845

continues on next page

Table 201 – continued from previous page

SETN(HL)	!CLK&D&RN	0.0100	n/a	n/a	0.0844
SETN(HL)	CLK&D&RN	0.0100	n/a	n/a	0.0845
D(HL)	!CLK&!RN&!SETN	0.0100	n/a	n/a	0.2129
D(HL)	!CLK&!RN&SETN	0.0100	n/a	n/a	0.3299
D(HL)	CLK&!RN&!SETN	0.0100	n/a	n/a	0.0831
D(HL)	CLK&!RN&SETN	0.0100	n/a	n/a	0.0831
D(HL)	!CLK&RN&!SETN	0.0100	n/a	n/a	0.2129
D(HL)	CLK&RN&!SETN	0.0100	n/a	n/a	0.0831
D(HL)	!CLK&RN&SETN	0.0100	n/a	n/a	0.3170
D(HL)	CLK&RN&SETN	0.0100	n/a	n/a	0.0831
CLK(LH)	!D&!RN&!SETN	0.0100	n/a	n/a	0.3354
CLK(LH)	!D&!RN&SETN	0.0100	n/a	n/a	0.3157
CLK(LH)	D&!RN&!SETN	0.0100	n/a	n/a	0.4541
CLK(LH)	D&!RN&SETN	0.0100	n/a	n/a	0.6578
CLK(LH)	!D&RN&!SETN	0.0100	n/a	n/a	0.4257
CLK(LH)	D&RN&!SETN	0.0100	n/a	n/a	0.3366
CLK(LH)	!D&RN&SETN	0.0100	n/a	n/a	0.3156
CLK(LH)	D&RN&SETN	0.0100	n/a	n/a	0.3366
CLK(HL)	!D&!RN&!SETN	0.0100	n/a	n/a	0.4178
CLK(HL)	!D&!RN&SETN	0.0100	n/a	n/a	0.4110
CLK(HL)	D&!RN&!SETN	0.0100	n/a	n/a	0.4934
CLK(HL)	D&!RN&SETN	0.0100	n/a	n/a	0.6480
CLK(HL)	!D&RN&!SETN	0.0100	n/a	n/a	0.5878
CLK(HL)	D&RN&!SETN	0.0100	n/a	n/a	0.4124
CLK(HL)	!D&RN&SETN	0.0100	n/a	n/a	0.4111
CLK(HL)	D&RN&SETN	0.0100	n/a	n/a	0.4122
D(LH)	!CLK&!RN&!SETN	0.0100	n/a	n/a	0.0846
D(LH)	!CLK&!RN&SETN	0.0100	n/a	n/a	0.2425
D(LH)	CLK&!RN&!SETN	0.0100	n/a	n/a	0.0062
D(LH)	CLK&!RN&SETN	0.0100	n/a	n/a	0.0062
D(LH)	!CLK&RN&!SETN	0.0100	n/a	n/a	0.0846
D(LH)	CLK&RN&!SETN	0.0100	n/a	n/a	0.0062
D(LH)	!CLK&RN&SETN	0.0100	n/a	n/a	0.2523
D(LH)	CLK&RN&SETN	0.0100	n/a	n/a	0.0062
RN(HL)	!CLK&!D&SETN	0.0100	n/a	n/a	0.0809
RN(HL)	CLK&!D&SETN	0.0100	n/a	n/a	0.0831
RN(HL)	!CLK&D&SETN	0.0100	n/a	n/a	0.0796
RN(HL)	CLK&D&SETN	0.0100	n/a	n/a	0.0829
RN(LH)	!CLK&!D&SETN	0.0100	n/a	n/a	-0.0767
RN(LH)	!CLK&D&SETN	0.0100	n/a	n/a	-0.0715
RN(LH)	CLK&!D&SETN	0.0100	n/a	n/a	-0.0767
RN(LH)	CLK&D&SETN	0.0100	n/a	n/a	-0.0767
SETN(LH)	!CLK&!D&!RN	0.0100	n/a	n/a	0.1978
SETN(LH)	!CLK&D&!RN	0.0100	n/a	n/a	0.0989
SETN(LH)	CLK&!D&!RN	0.0100	n/a	n/a	0.1882
SETN(LH)	CLK&D&!RN	0.0100	n/a	n/a	0.1882
SETN(LH)	!CLK&!D&RN	0.0100	n/a	n/a	0.0252
SETN(LH)	!CLK&D&RN	0.0100	n/a	n/a	-0.0613
SETN(LH)	CLK&!D&RN	0.0100	n/a	n/a	-0.0613
SETN(LH)	CLK&D&RN	0.0100	n/a	n/a	-0.0613

LEAKAGE POWER

When Condition	Power (nW)
!CLK&!D&!RN&!SETN	0.5265
!CLK&!D&!RN&SETN	0.5440
!CLK&D&!RN&!SETN	0.5282
!CLK&D&!RN&SETN	0.5579
CLK&!D&!RN&!SETN	0.6061
CLK&!D&!RN&SETN	0.5841
CLK&D&!RN&!SETN	0.6088
CLK&D&!RN&SETN	0.5868
CLK&D&RN&SETN	0.8034
!CLK&!D&RN&!SETN	0.5092
!CLK&D&RN&!SETN	0.5107
CLK&!D&RN&!SETN	0.5662
CLK&D&RN&!SETN	0.5680
!CLK&!D&RN&SETN	0.7612
!CLK&D&RN&SETN	0.7278
CLK&!D&RN&SETN	0.6250

gf180mcu_fd_sc_mcu9t5v0__dffsnq_1

gf180mcu_fd_sc_mcu9t5v0__dffsnq_1 symbol

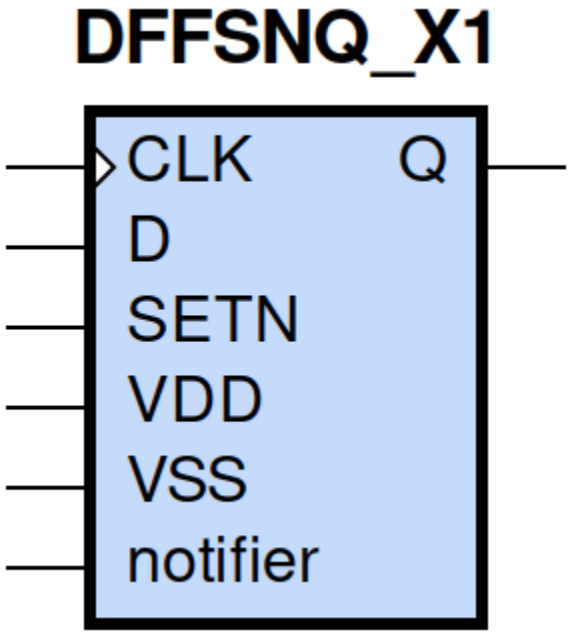

gf180mcu_fd_sc_mcu9t5v0__dffsnq_1 schematic

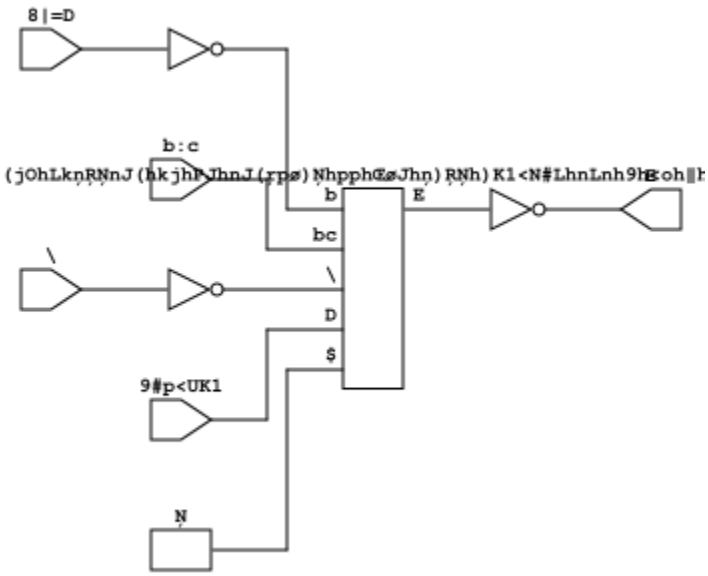

gf180mcu_fd_sc_mcu9t5v0__dffsnq_1 layout

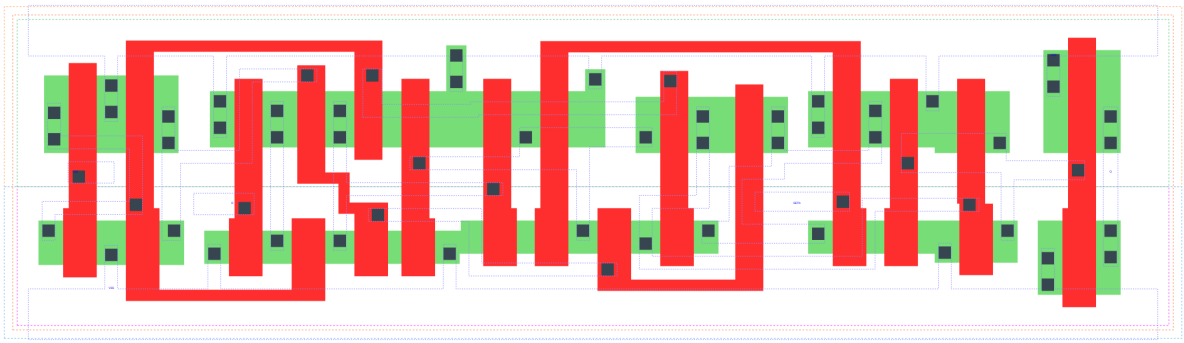

DFFSNQ_X1 is a positive edge triggered D-type flip flop with active low set and 1X drive strength

Attributes

Attribute	Value
area	101.606400 μm^2

TRUTH TABLE

Input			Output
SETN	D	CLK	Q
H	L	↑	L
H	H	↑	H
L	X	X	H

FUNCTIONAL SCHEMATIC

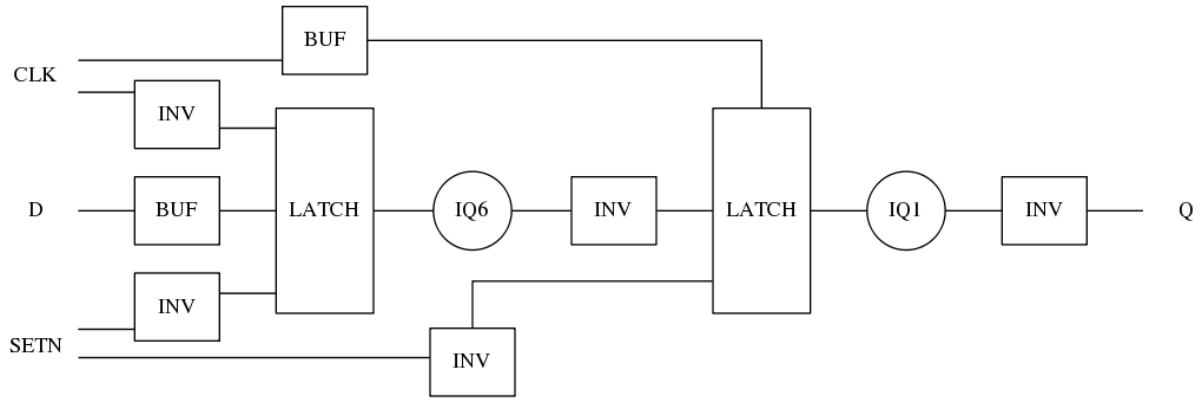

CONSTRAINTS

Constraint Pin	Related Pin	setup(ns)	hold(ns)
D(HL)	CLK(LH)	0.2060	0.0400
D(LH)	CLK(LH)	0.2750	-0.0520

Constraint Pin	Related Pin	recovery(ns)	removal(ns)
SETN(LH)	CLK(LH)	0.0060	0.1720

Constraint Pin	Related Pin	Minimum Pulse Width(ns)
CLK(HLH)	CLK(HL)	0.3820
CLK(HLH)	CLK(HL)	0.3760
CLK(LHL)	CLK(LH)	0.3980
CLK(LHL)	CLK(LH)	0.3290
SETN(HLH)	SETN(HL)	0.3100
SETN(HLH)	SETN(HL)	0.3100
SETN(HLH)	SETN(HL)	0.3290
SETN(HLH)	SETN(HL)	0.3290

PIN CAPACITANCE (pf)

Pin	Type	Capacitance (pf)
CLK	input	0.0050
D	input	0.0040
SETN	input	0.0087

DELAY AND OUTPUT TRANSITION TIME corresponding to min slew and load

Input Pin	Output	When Condition	Tin (ns)	Out Load (pf)	Delay (ns)	Tout (ns)
CLK(LH)	Q(HL)	!D&SETN	0.0100	0.0010	0.5916	0.0383
CLK(LH)	Q(LH)	D&SETN	0.0100	0.0010	0.5058	0.0364
SETN(HL)	Q(LH)	!CLK&!D	0.0100	0.0010	0.4289	0.0365
SETN(HL)	Q(LH)	!CLK&D	0.0100	0.0010	0.4292	0.0366
SETN(HL)	Q(LH)	CLK&!D	0.0100	0.0010	0.4614	0.0368
SETN(HL)	Q(LH)	CLK&D	0.0100	0.0010	0.4613	0.0368

DYNAMIC ENERGY

Input Pin	When Condition	Tin (ns)	Output	Out Load (pf)	Energy (uW/MHz)
CLK	!D&SETN	0.0100	Q(HL)	0.0010	0.8127
CLK	D&SETN	0.0100	Q(LH)	0.0010	0.8308
SETN	!CLK&!D	0.0100	Q(LH)	0.0010	0.6899
SETN	!CLK&D	0.0100	Q(LH)	0.0010	0.5737
SETN	CLK&!D	0.0100	Q(LH)	0.0010	0.8156
SETN	CLK&D	0.0100	Q(LH)	0.0010	0.8156
SETN(HL)	!CLK&!D	0.0100	n/a	n/a	0.1851
SETN(HL)	!CLK&D	0.0100	n/a	n/a	0.0708

continues on next page

Table 202 – continued from previous page

SETN(HL)	CLK&!D	0.0100	n/a	n/a	0.0708
SETN(HL)	CLK&D	0.0100	n/a	n/a	0.0708
D(HL)	!CLK&!SETN	0.0100	n/a	n/a	0.2045
D(HL)	CLK&!SETN	0.0100	n/a	n/a	0.0853
D(HL)	!CLK&SETN	0.0100	n/a	n/a	0.3081
D(HL)	CLK&SETN	0.0100	n/a	n/a	0.0853
CLK(LH)	!D&!SETN	0.0100	n/a	n/a	0.3986
CLK(LH)	D&!SETN	0.0100	n/a	n/a	0.3067
CLK(LH)	!D&SETN	0.0100	n/a	n/a	0.2935
CLK(LH)	D&SETN	0.0100	n/a	n/a	0.3066
CLK(HL)	!D&!SETN	0.0100	n/a	n/a	0.5658
CLK(HL)	D&!SETN	0.0100	n/a	n/a	0.3921
CLK(HL)	!D&SETN	0.0100	n/a	n/a	0.3926
CLK(HL)	D&SETN	0.0100	n/a	n/a	0.3921
D(LH)	!CLK&!SETN	0.0100	n/a	n/a	0.0868
D(LH)	CLK&!SETN	0.0100	n/a	n/a	0.0085
D(LH)	!CLK&SETN	0.0100	n/a	n/a	0.2381
D(LH)	CLK&SETN	0.0100	n/a	n/a	0.0086
SETN(LH)	!CLK&!D	0.0100	n/a	n/a	0.0368
SETN(LH)	!CLK&D	0.0100	n/a	n/a	-0.0486
SETN(LH)	CLK&!D	0.0100	n/a	n/a	-0.0486
SETN(LH)	CLK&D	0.0100	n/a	n/a	-0.0486

LEAKAGE POWER

When Condition	Power (nW)
!CLK&!D&!SETN	0.4057
!CLK&D&!SETN	0.4072
CLK&!D&!SETN	0.4439
CLK&D&!SETN	0.4457
!CLK&!D&SETN	0.6405
!CLK&D&SETN	0.6125
CLK&!D&SETN	0.5440
CLK&D&SETN	0.6538

gf180mcu_fd_sc_mcu9t5v0__dffsnq_2

gf180mcu_fd_sc_mcu9t5v0__dffsnq_2 symbol

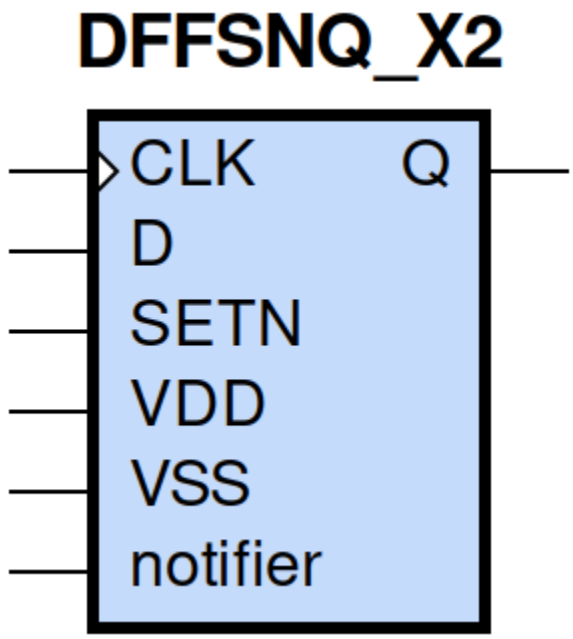

gf180mcu_fd_sc_mcu9t5v0__dffsnq_2 schematic

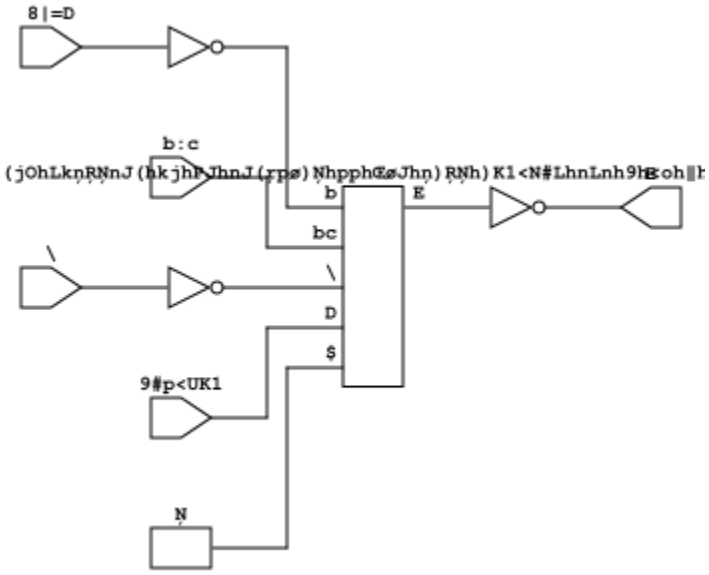

gf180mcu_fd_sc_mcu9t5v0__dffsnq_2 layout

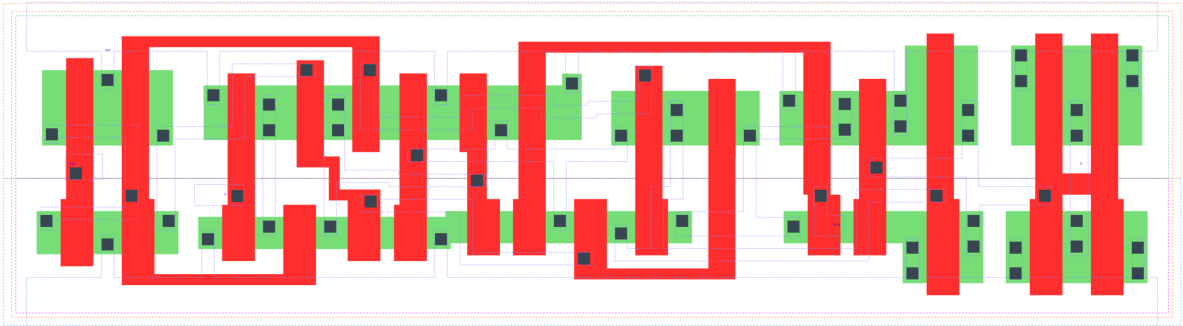

DFFSNQ_X2 is a positivee edge triggered D-type flip flop with active low set and 2X drive strength

Attributes

Attribute	Value
area	104.428800 μm^2

TRUTH TABLE

Input			Output
SETN	D	CLK	Q
H	L	↑	L
H	H	↑	H
L	X	X	H

FUNCTIONAL SCHEMATIC

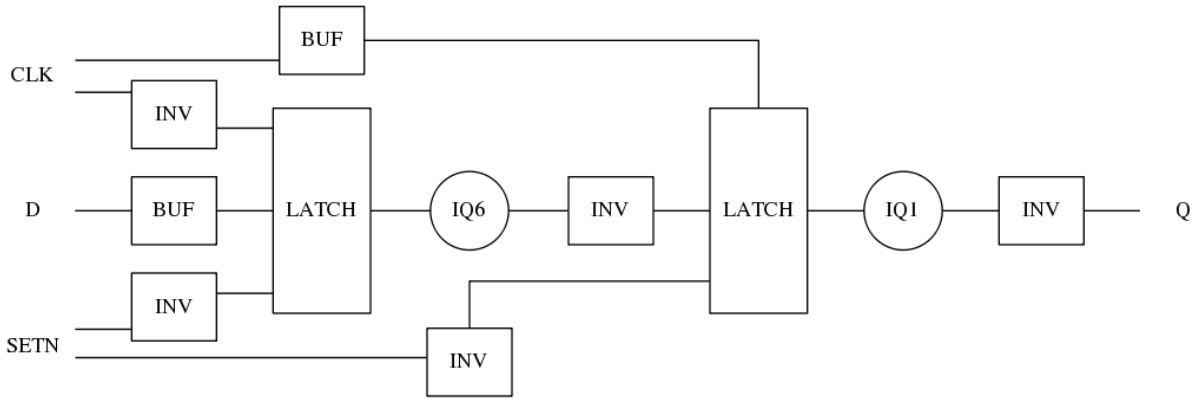

CONSTRAINTS

Constraint Pin	Related Pin	setup(ns)	hold(ns)
D(HL)	CLK(LH)	0.2180	0.0400
D(LH)	CLK(LH)	0.2690	-0.0400

Constraint Pin	Related Pin	recovery(ns)	removal(ns)
SETN(LH)	CLK(LH)	0.0110	0.1600

Constraint Pin	Related Pin	Minimum Pulse Width(ns)
CLK(HLH)	CLK(HL)	0.3880
CLK(HLH)	CLK(HL)	0.3760
CLK(LHL)	CLK(LH)	0.4170
CLK(LHL)	CLK(LH)	0.3580
SETN(HLH)	SETN(HL)	0.3390
SETN(HLH)	SETN(HL)	0.3390
SETN(HLH)	SETN(HL)	0.3490
SETN(HLH)	SETN(HL)	0.3490

PIN CAPACITANCE (pf)

Pin	Type	Capacitance (pf)
CLK	input	0.0049
D	input	0.0039
SETN	input	0.0085

DELAY AND OUTPUT TRANSITION TIME corresponding to min slew and load

Input Pin	Output	When Condition	Tin (ns)	Out Load (pf)	Delay (ns)	Tout (ns)
CLK(LH)	Q(HL)	!D&SETN	0.0100	0.0010	0.6091	0.0321
CLK(LH)	Q(LH)	D&SETN	0.0100	0.0010	0.5219	0.0293
SETN(HL)	Q(LH)	!CLK&!D	0.0100	0.0010	0.4355	0.0291
SETN(HL)	Q(LH)	!CLK&D	0.0100	0.0010	0.4358	0.0295
SETN(HL)	Q(LH)	CLK&!D	0.0100	0.0010	0.4725	0.0294
SETN(HL)	Q(LH)	CLK&D	0.0100	0.0010	0.4725	0.0293

DYNAMIC ENERGY

Input Pin	When Condition	Tin (ns)	Output	Out Load (pf)	Energy (uW/MHz)
CLK	!D&SETN	0.0100	Q(HL)	0.0010	1.0691
CLK	D&SETN	0.0100	Q(LH)	0.0010	1.0378
SETN	!CLK&!D	0.0100	Q(LH)	0.0010	0.8980
SETN	!CLK&D	0.0100	Q(LH)	0.0010	0.7866
SETN	CLK&!D	0.0100	Q(LH)	0.0010	1.0320
SETN	CLK&D	0.0100	Q(LH)	0.0010	1.0322
SETN(HL)	!CLK&!D	0.0100	n/a	n/a	0.1804
SETN(HL)	!CLK&D	0.0100	n/a	n/a	0.0707
SETN(HL)	CLK&!D	0.0100	n/a	n/a	0.0708
SETN(HL)	CLK&D	0.0100	n/a	n/a	0.0708
D(HL)	!CLK&!SETN	0.0100	n/a	n/a	0.2056
D(HL)	CLK&!SETN	0.0100	n/a	n/a	0.0841
D(HL)	!CLK&SETN	0.0100	n/a	n/a	0.3109
D(HL)	CLK&SETN	0.0100	n/a	n/a	0.0841
CLK(LH)	!D&!SETN	0.0100	n/a	n/a	0.3922
CLK(LH)	D&!SETN	0.0100	n/a	n/a	0.3007
CLK(LH)	!D&SETN	0.0100	n/a	n/a	0.2873
CLK(LH)	D&SETN	0.0100	n/a	n/a	0.3004
CLK(HL)	!D&!SETN	0.0100	n/a	n/a	0.5616
CLK(HL)	D&!SETN	0.0100	n/a	n/a	0.3872
CLK(HL)	!D&SETN	0.0100	n/a	n/a	0.3877
CLK(HL)	D&SETN	0.0100	n/a	n/a	0.3872
D(LH)	!CLK&!SETN	0.0100	n/a	n/a	0.0900
D(LH)	CLK&!SETN	0.0100	n/a	n/a	0.0118
D(LH)	!CLK&SETN	0.0100	n/a	n/a	0.2357

continues on next page

Table 203 – continued from previous page

D(LH)	CLK&SETN	0.0100	n/a	n/a	0.0117
SETN(LH)	!CLK&!D	0.0100	n/a	n/a	0.0370
SETN(LH)	!CLK&D	0.0100	n/a	n/a	-0.0508
SETN(LH)	CLK&!D	0.0100	n/a	n/a	-0.0507
SETN(LH)	CLK&D	0.0100	n/a	n/a	-0.0507

LEAKAGE POWER

When Condition	Power (nW)
!CLK&!D&!SETN	0.4317
!CLK&D&!SETN	0.4332
CLK&!D&!SETN	0.4699
CLK&D&!SETN	0.4717
!CLK&!D&SETN	0.6615
!CLK&D&SETN	0.6273
CLK&!D&SETN	0.5716
CLK&D&SETN	0.6760

gf180mcu_fd_sc_mcu9t5v0__dffsnq_4

gf180mcu_fd_sc_mcu9t5v0__dffsnq_4 symbol

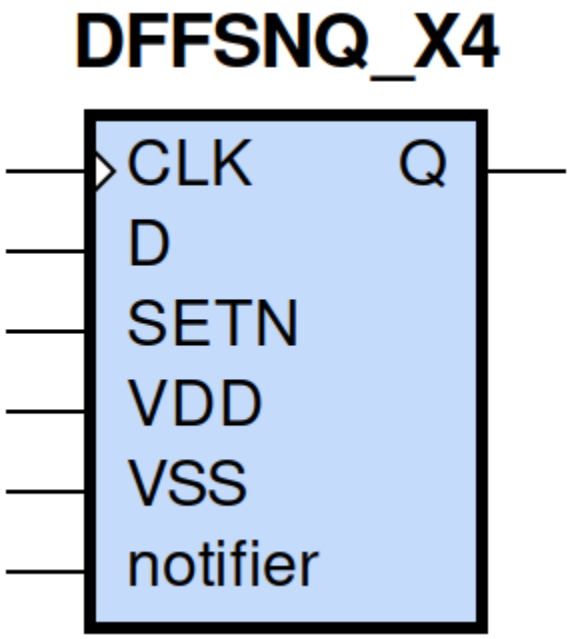

gf180mcu_fd_sc_mcu9t5v0__dffsnq_4 schematic

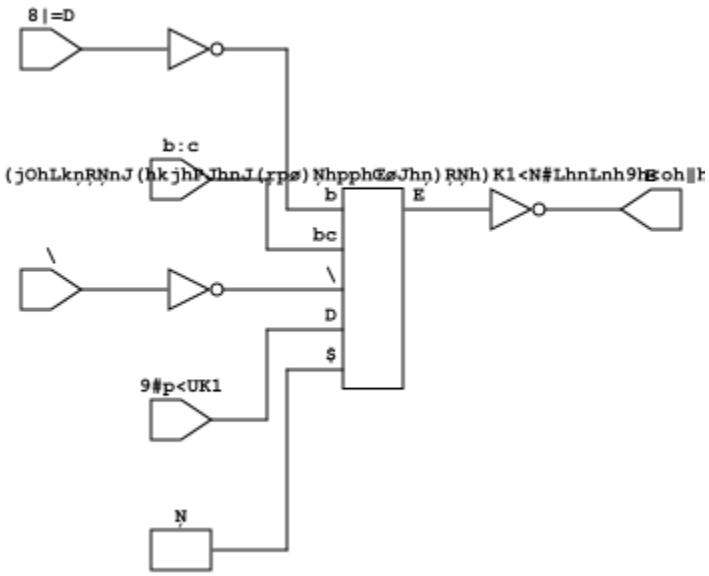

gf180mcu_fd_sc_mcu9t5v0__dffsnq_4 layout

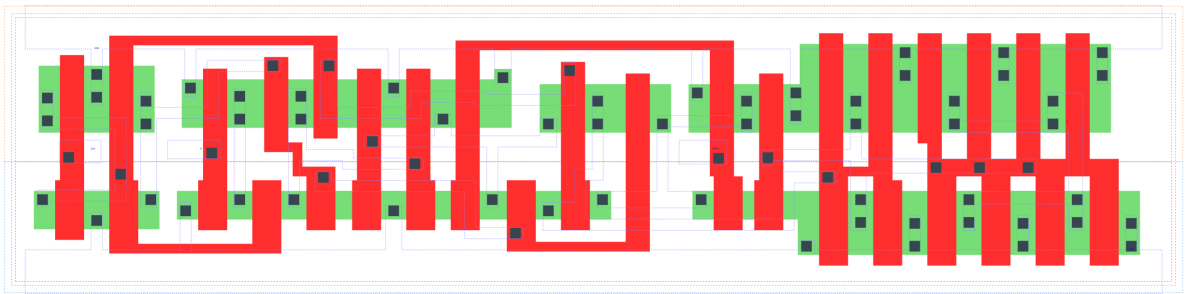

DFFSNQ_X4 is a positive edge triggered D-type flip flop with active low set and 4X drive strength

Attributes

Attribute	Value
area	118.540800 μm^2

TRUTH TABLE

Input			Output
SETN	D	CLK	Q
H	L	↑	L
H	H	↑	H
L	X	X	H

FUNCTIONAL SCHEMATIC

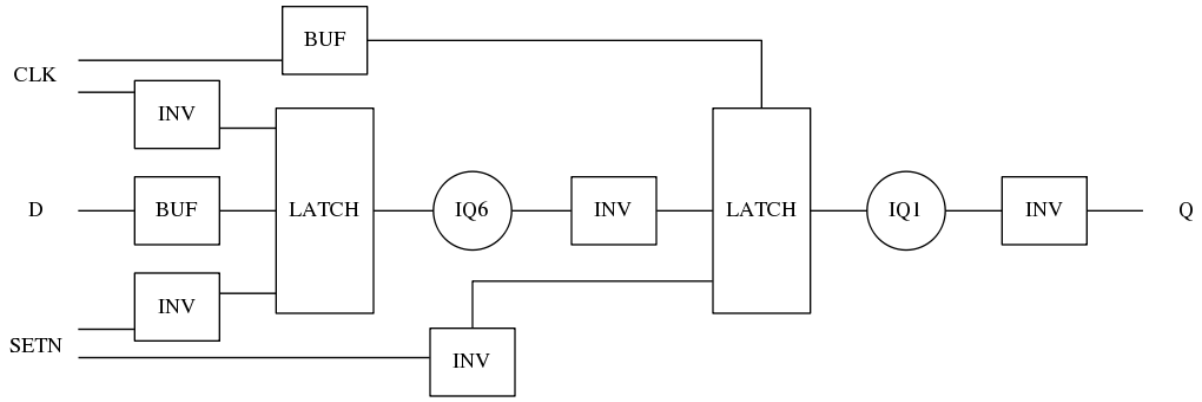

CONSTRAINTS

Constraint Pin	Related Pin	setup(ns)	hold(ns)
D(HL)	CLK(LH)	0.2180	0.0460
D(LH)	CLK(LH)	0.2630	-0.0340

Constraint Pin	Related Pin	recovery(ns)	removal(ns)
SETN(LH)	CLK(LH)	0.0110	0.1430

Constraint Pin	Related Pin	Minimum Pulse Width(ns)
CLK(HLH)	CLK(HL)	0.3880
CLK(HLH)	CLK(HL)	0.3760
CLK(LHL)	CLK(LH)	0.4760
CLK(LHL)	CLK(LH)	0.4170
SETN(HLH)	SETN(HL)	0.3980
SETN(HLH)	SETN(HL)	0.3980
SETN(HLH)	SETN(HL)	0.4070
SETN(HLH)	SETN(HL)	0.4070

PIN CAPACITANCE (pf)

Pin	Type	Capacitance (pf)
CLK	input	0.0051
D	input	0.0039
SETN	input	0.0086

DELAY AND OUTPUT TRANSITION TIME corresponding to min slew and load

Input Pin	Output	When Condition	Tin (ns)	Out Load (pf)	Delay (ns)	Tout (ns)
CLK(LH)	Q(HL)	!D&SETN	0.0100	0.0010	0.6885	0.0321
CLK(LH)	Q(LH)	D&SETN	0.0100	0.0010	0.5855	0.0301
SETN(HL)	Q(LH)	!CLK&!D	0.0100	0.0010	0.4979	0.0295
SETN(HL)	Q(LH)	!CLK&D	0.0100	0.0010	0.4982	0.0295
SETN(HL)	Q(LH)	CLK&!D	0.0100	0.0010	0.5313	0.0296
SETN(HL)	Q(LH)	CLK&D	0.0100	0.0010	0.5313	0.0295

DYNAMIC ENERGY

Input Pin	When Condition	Tin (ns)	Output	Out Load (pf)	Energy (uW/MHz)
CLK	!D&SETN	0.0100	Q(HL)	0.0010	1.7145
CLK	D&SETN	0.0100	Q(LH)	0.0010	1.6363
SETN	!CLK&!D	0.0100	Q(LH)	0.0010	1.4825
SETN	!CLK&D	0.0100	Q(LH)	0.0010	1.3710
SETN	CLK&!D	0.0100	Q(LH)	0.0010	1.6229
SETN	CLK&D	0.0100	Q(LH)	0.0010	1.6229
SETN(HL)	!CLK&!D	0.0100	n/a	n/a	0.1807
SETN(HL)	!CLK&D	0.0100	n/a	n/a	0.0707

continues on next page

Table 204 – continued from previous page

SETN(HL)	CLK&!D	0.0100	n/a	n/a	0.0708
SETN(HL)	CLK&D	0.0100	n/a	n/a	0.0708
D(HL)	!CLK&!SETN	0.0100	n/a	n/a	0.2048
D(HL)	CLK&!SETN	0.0100	n/a	n/a	0.0833
D(HL)	!CLK&SETN	0.0100	n/a	n/a	0.3086
D(HL)	CLK&SETN	0.0100	n/a	n/a	0.0832
CLK(LH)	!D&!SETN	0.0100	n/a	n/a	0.3931
CLK(LH)	D&!SETN	0.0100	n/a	n/a	0.3016
CLK(LH)	!D&SETN	0.0100	n/a	n/a	0.2877
CLK(LH)	D&SETN	0.0100	n/a	n/a	0.3015
CLK(HL)	!D&!SETN	0.0100	n/a	n/a	0.5680
CLK(HL)	D&!SETN	0.0100	n/a	n/a	0.3932
CLK(HL)	!D&SETN	0.0100	n/a	n/a	0.3935
CLK(HL)	D&SETN	0.0100	n/a	n/a	0.3931
D(LH)	!CLK&!SETN	0.0100	n/a	n/a	0.0900
D(LH)	CLK&!SETN	0.0100	n/a	n/a	0.0117
D(LH)	!CLK&SETN	0.0100	n/a	n/a	0.2374
D(LH)	CLK&SETN	0.0100	n/a	n/a	0.0117
SETN(LH)	!CLK&!D	0.0100	n/a	n/a	0.0357
SETN(LH)	!CLK&D	0.0100	n/a	n/a	-0.0494
SETN(LH)	CLK&!D	0.0100	n/a	n/a	-0.0494
SETN(LH)	CLK&D	0.0100	n/a	n/a	-0.0494

LEAKAGE POWER

When Condition	Power (nW)
!CLK&!D&!SETN	0.5097
!CLK&D&!SETN	0.5112
CLK&!D&!SETN	0.5480
CLK&D&!SETN	0.5497
!CLK&!D&SETN	0.7482
!CLK&D&SETN	0.7121
CLK&!D&SETN	0.6567
CLK&D&SETN	0.7607

gf180mcu_fd_sc_mcu9t5v0__dlya_1

gf180mcu_fd_sc_mcu9t5v0__dlya_1 symbol

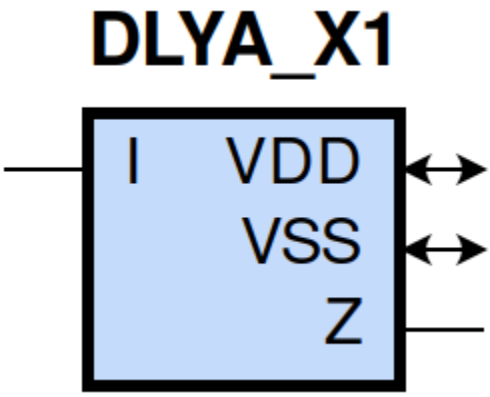

gf180mcu_fd_sc_mcu9t5v0__dlya_1 schematic

gf180mcu_fd_sc_mcu9t5v0__dlya_1 layout

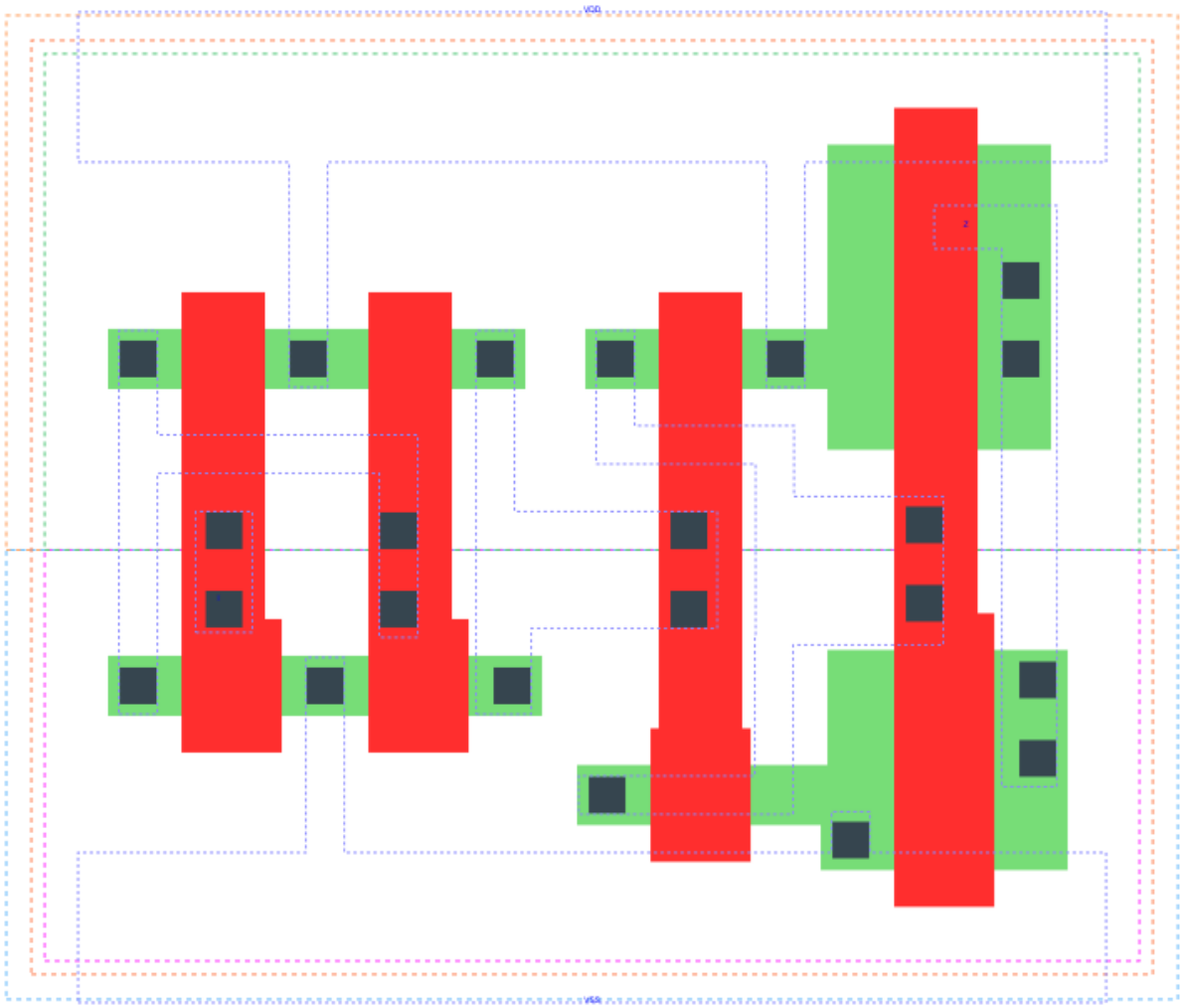

DLYA_X1 is a 2 buffer delay cell with 1X drive strength

Attributes

Attribute	Value
area	31.046400 μm^2

OUTPUT FUNCTIONS

Output Pin	Function
Z	I

TRUTH TABLE FOR Z

I	Z
1	1
0	0

FUNCTIONAL SCHEMATIC

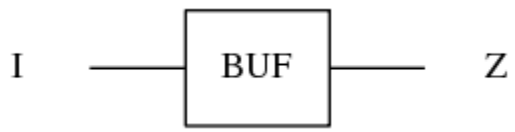

PIN CAPACITANCE (pf)

Pin	Type	Capacitance (pf)
I	input	0.0023

DELAY AND OUTPUT TRANSITION TIME corresponding to min slew and load

Input Pin	Output	When Condition	Tin (ns)	Out Load (pf)	Delay (ns)	Tout (ns)
I(LH)	Z(LH)	default	0.0100	0.0010	0.4116	0.0398
I(HL)	Z(HL)	default	0.0100	0.0010	0.5110	0.0556

DYNAMIC ENERGY

Input Pin	When Condition	Tin (ns)	Output	Out Load (pf)	Energy (uW/MHz)
I	default	0.0100	Z(LH)	0.0010	0.2751
I	default	0.0100	Z(HL)	0.0010	0.3987

LEAKAGE POWER

When Condition	Power (nW)
!I	0.1580
I	0.1551

gf180mcu_fd_sc_mcu9t5v0__dlya_2

gf180mcu_fd_sc_mcu9t5v0__dlya_2 symbol

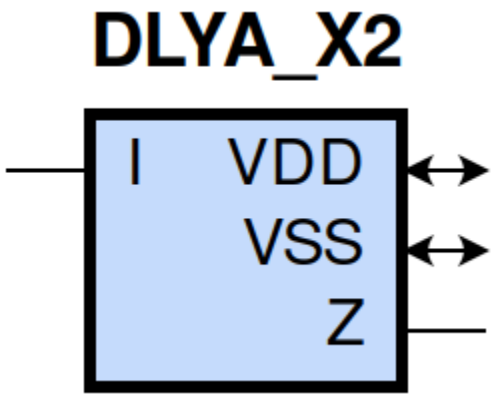

gf180mcu_fd_sc_mcu9t5v0__dlya_2 schematic

gf180mcu_fd_sc_mcu9t5v0__dlya_2 layout

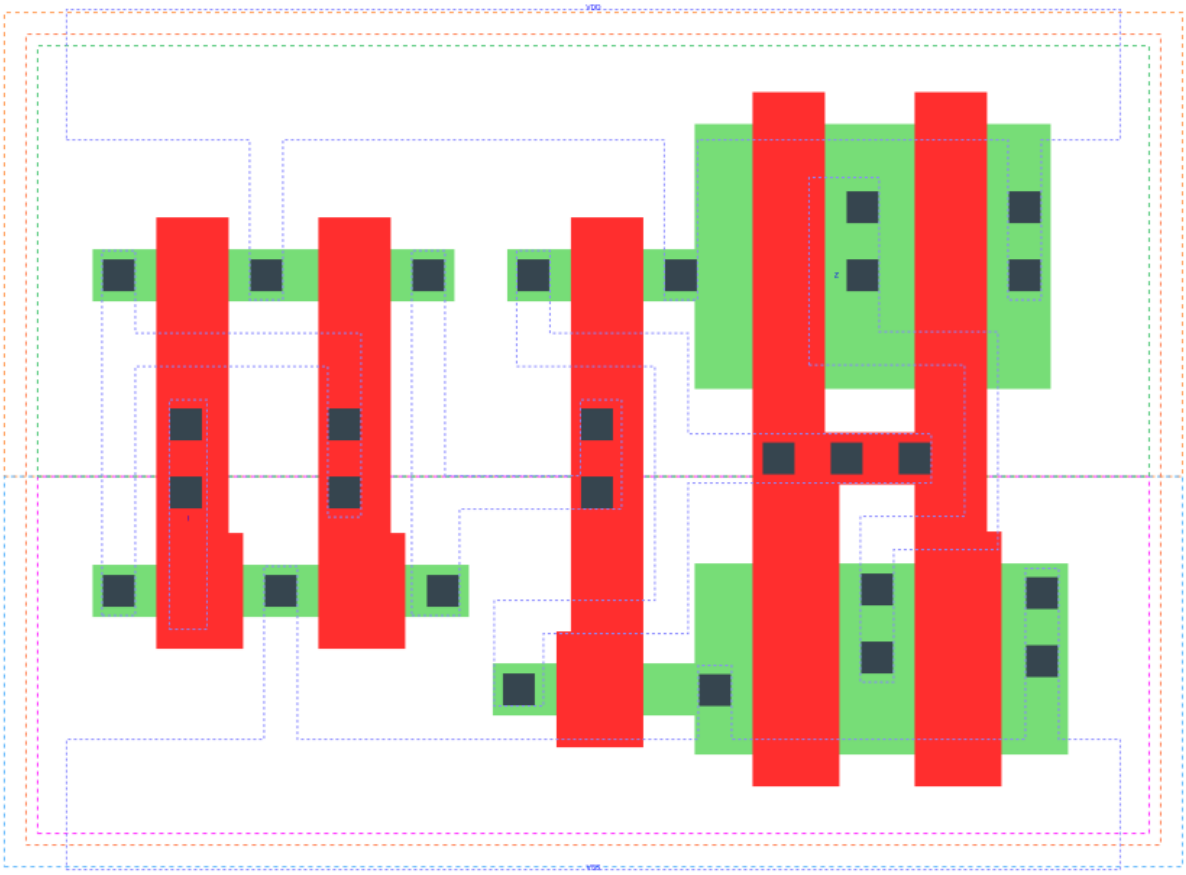

DLYA_X2 is a 2 buffer delay cell with 2X drive strength

Attributes

Attribute	Value
area	36.691200 μm^2

OUTPUT FUNCTIONS

Output Pin	Function
Z	I

TRUTH TABLE FOR Z

I	Z
1	1
0	0

FUNCTIONAL SCHEMATIC

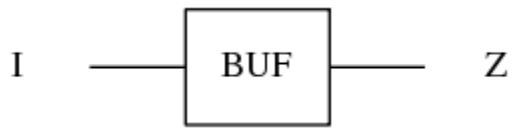

PIN CAPACITANCE (pf)

Pin	Type	Capacitance (pf)
I	input	0.0025

DELAY AND OUTPUT TRANSITION TIME corresponding to min slew and load

Input Pin	Output	When Condition	Tin (ns)	Out Load (pf)	Delay (ns)	Tout (ns)
I(LH)	Z(LH)	default	0.0100	0.0010	0.4934	0.0414
I(HL)	Z(HL)	default	0.0100	0.0010	0.6566	0.0744

DYNAMIC ENERGY

Input Pin	When Condition	Tin (ns)	Output	Out Load (pf)	Energy (uW/MHz)
I	default	0.0100	Z(LH)	0.0010	0.4846
I	default	0.0100	Z(HL)	0.0010	0.8443

LEAKAGE POWER

When Condition	Power (nW)
!I	0.1848
I	0.1807

gf180mcu_fd_sc_mcu9t5v0__dlya_4

gf180mcu_fd_sc_mcu9t5v0__dlya_4 symbol

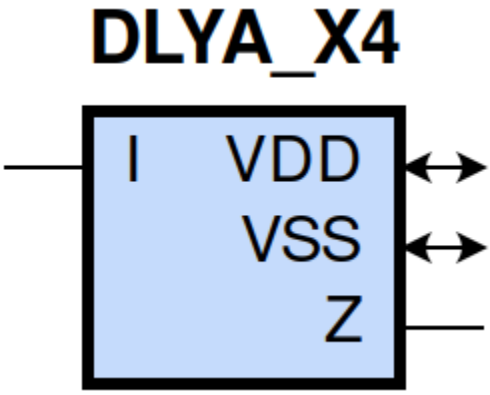

gf180mcu_fd_sc_mcu9t5v0__dlya_4 schematic

gf180mcu_fd_sc_mcu9t5v0__dlya_4 layout

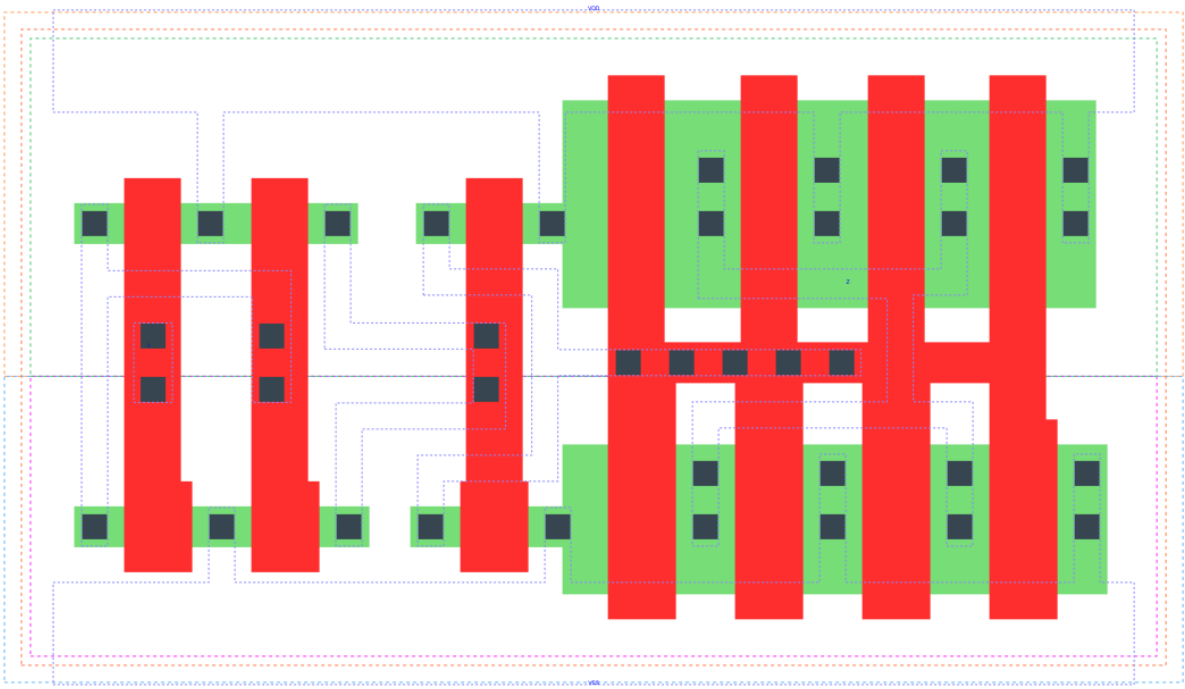

DLYA_X4 is a 2 buffer delay cell with 4X drive strength

Attributes

Attribute	Value
area	47.980800 μm^2

OUTPUT FUNCTIONS

Output Pin	Function
Z	I

TRUTH TABLE FOR Z

I	Z
1	1
0	0

FUNCTIONAL SCHEMATIC

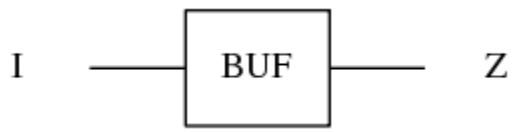

PIN CAPACITANCE (pf)

Pin	Type	Capacitance (pf)
I	input	0.0025

DELAY AND OUTPUT TRANSITION TIME corresponding to min slew and load

Input Pin	Output	When Condition	Tin (ns)	Out Load (pf)	Delay (ns)	Tout (ns)
I(LH)	Z(LH)	default	0.0100	0.0010	0.6716	0.0592
I(HL)	Z(HL)	default	0.0100	0.0010	0.9710	0.1224

DYNAMIC ENERGY

Input Pin	When Condition	Tin (ns)	Output	Out Load (pf)	Energy (uW/MHz)
I	default	0.0100	Z(LH)	0.0010	1.1941
I	default	0.0100	Z(HL)	0.0010	2.4146

LEAKAGE POWER

When Condition	Power (nW)
!I	0.2385
I	0.2318

gf180mcu_fd_sc_mcu9t5v0__dlyb_1

gf180mcu_fd_sc_mcu9t5v0__dlyb_1 symbol

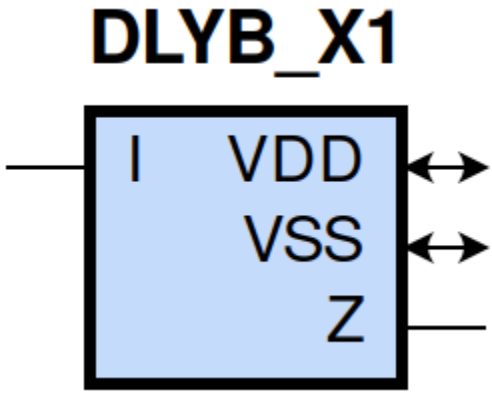

gf180mcu_fd_sc_mcu9t5v0__dlyb_1 schematic

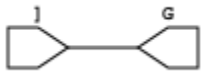

gf180mcu_fd_sc_mcu9t5v0__dlyb_1 layout

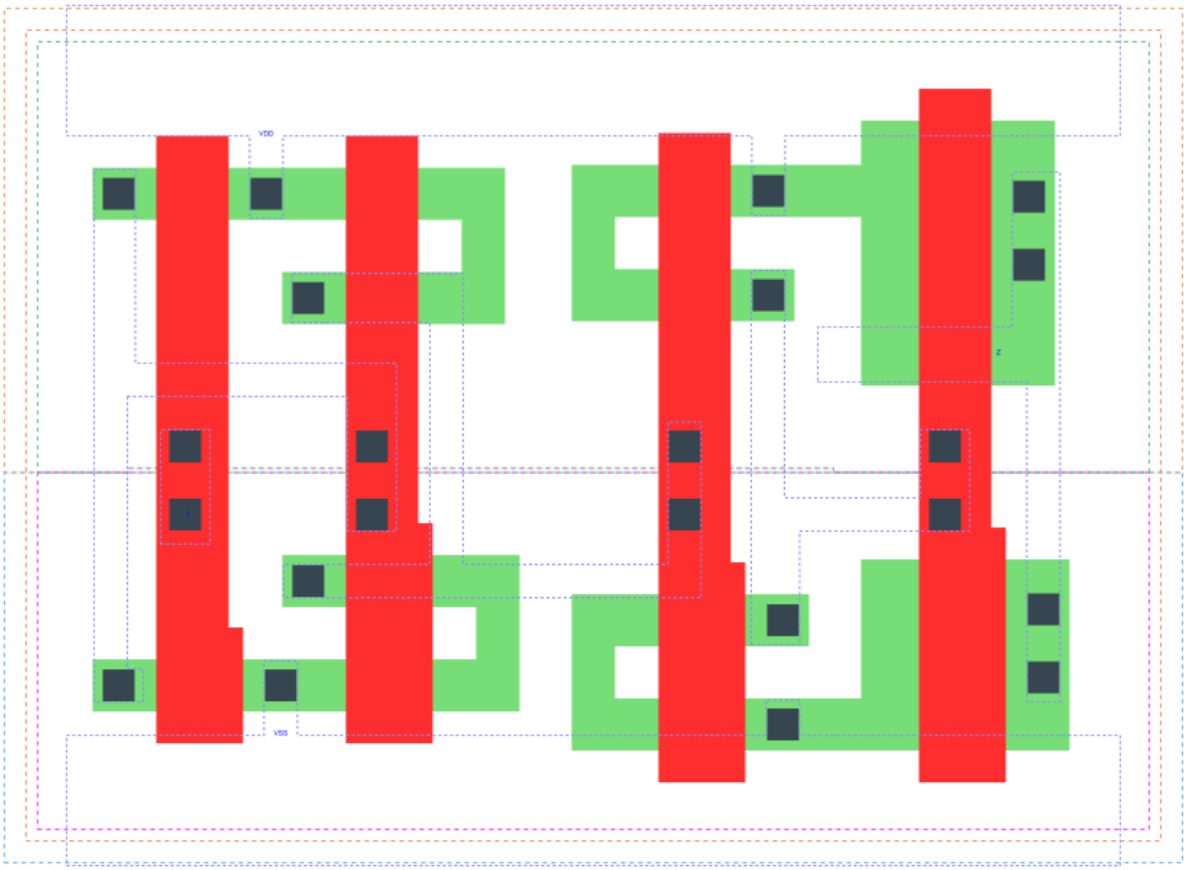

DLYB_X1 is a 4 buffer delay cell with 1X drive strength

Attributes

Attribute	Value
area	36.691200 μm^2

OUTPUT FUNCTIONS

Output Pin	Function
Z	I

TRUTH TABLE FOR Z

I	Z
1	1
0	0

FUNCTIONAL SCHEMATIC

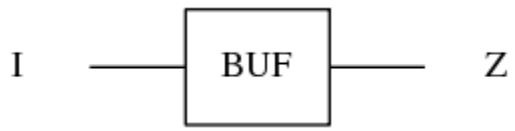

PIN CAPACITANCE (pf)

Pin	Type	Capacitance (pf)
I	input	0.0026

DELAY AND OUTPUT TRANSITION TIME corresponding to min slew and load

Input Pin	Output	When Condition	Tin (ns)	Out Load (pf)	Delay (ns)	Tout (ns)
I(LH)	Z(LH)	default	0.0100	0.0010	0.7777	0.0537
I(HL)	Z(HL)	default	0.0100	0.0010	0.8766	0.0841

DYNAMIC ENERGY

Input Pin	When Condition	Tin (ns)	Output	Out Load (pf)	Energy (uW/MHz)
I	default	0.0100	Z(LH)	0.0010	0.3723
I	default	0.0100	Z(HL)	0.0010	0.5388

LEAKAGE POWER

When Condition	Power (nW)
!I	0.1560
I	0.1531

gf180mcu_fd_sc_mcu9t5v0__dlyb_2

gf180mcu_fd_sc_mcu9t5v0__dlyb_2 symbol

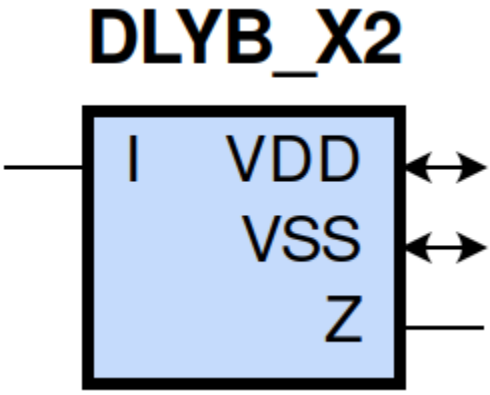

gf180mcu_fd_sc_mcu9t5v0__dlyb_2 schematic

gf180mcu_fd_sc_mcu9t5v0__dlyb_2 layout

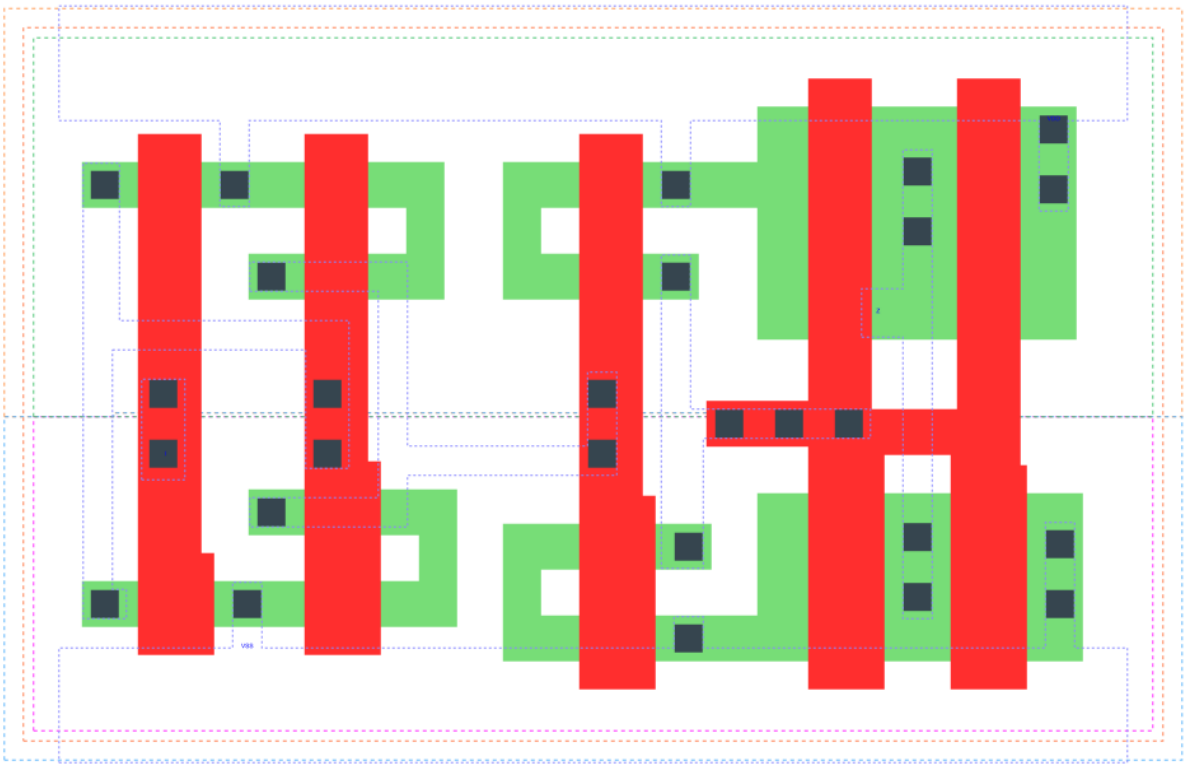

DLYB_X2 is a 4 buffer delay cell with 2X drive strength

Attributes

Attribute	Value
area	42.336000 μm^2

OUTPUT FUNCTIONS

Output Pin	Function
Z	I

TRUTH TABLE FOR Z

I	Z
1	1
0	0

FUNCTIONAL SCHEMATIC

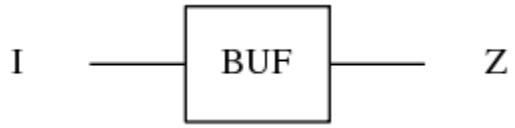

PIN CAPACITANCE (pf)

Pin	Type	Capacitance (pf)
I	input	0.0026

DELAY AND OUTPUT TRANSITION TIME corresponding to min slew and load

Input Pin	Output	When Condition	Tin (ns)	Out Load (pf)	Delay (ns)	Tout (ns)
I(LH)	Z(LH)	default	0.0100	0.0010	0.9016	0.0575
I(HL)	Z(HL)	default	0.0100	0.0010	1.1264	0.1170

DYNAMIC ENERGY

Input Pin	When Condition	Tin (ns)	Output	Out Load (pf)	Energy (uW/MHz)
I	default	0.0100	Z(LH)	0.0010	0.6725
I	default	0.0100	Z(HL)	0.0010	1.2672

LEAKAGE POWER

When Condition	Power (nW)
!I	0.1829
I	0.1787

gf180mcu_fd_sc_mcu9t5v0__dlyb_4

gf180mcu_fd_sc_mcu9t5v0__dlyb_4 symbol

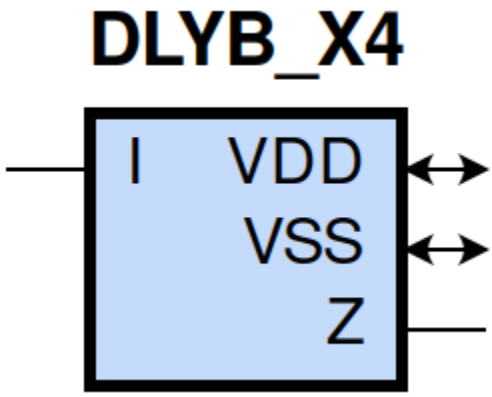

gf180mcu_fd_sc_mcu9t5v0__dlyb_4 schematic

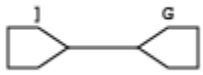

gf180mcu_fd_sc_mcu9t5v0__dlyb_4 layout

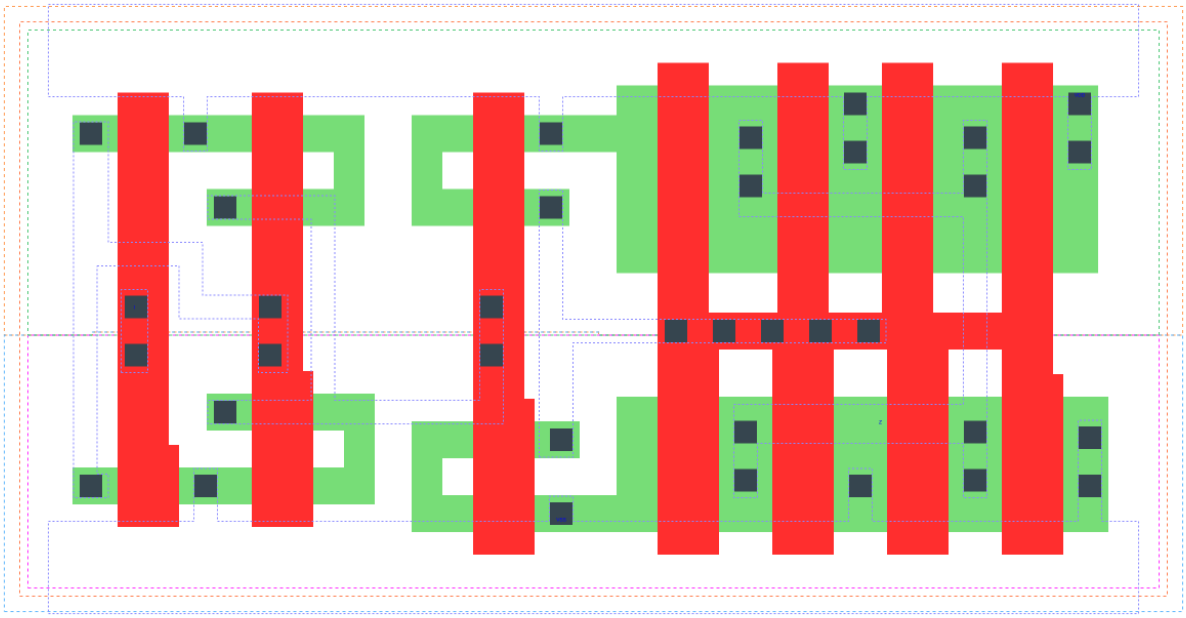

DLYB_X4 is a 4 buffer delay cell with 4X drive strength

Attributes

Attribute	Value
area	53.625600 μm^2

OUTPUT FUNCTIONS

Output Pin	Function
Z	I

TRUTH TABLE FOR Z

I	Z
1	1
0	0

FUNCTIONAL SCHEMATIC

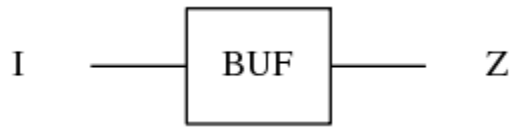

PIN CAPACITANCE (pf)

Pin	Type	Capacitance (pf)
I	input	0.0026

DELAY AND OUTPUT TRANSITION TIME corresponding to min slew and load

Input Pin	Output	When Condition	Tin (ns)	Out Load (pf)	Delay (ns)	Tout (ns)
I(LH)	Z(LH)	default	0.0100	0.0010	1.1647	0.0850
I(HL)	Z(HL)	default	0.0100	0.0010	1.6794	0.2033

DYNAMIC ENERGY

Input Pin	When Condition	Tin (ns)	Output	Out Load (pf)	Energy (uW/MHz)
I	default	0.0100	Z(LH)	0.0010	1.7077
I	default	0.0100	Z(HL)	0.0010	3.9481

LEAKAGE POWER

When Condition	Power (nW)
!I	0.2366
I	0.2298

gf180mcu_fd_sc_mcu9t5v0__dlyc_1

gf180mcu_fd_sc_mcu9t5v0__dlyc_1 symbol

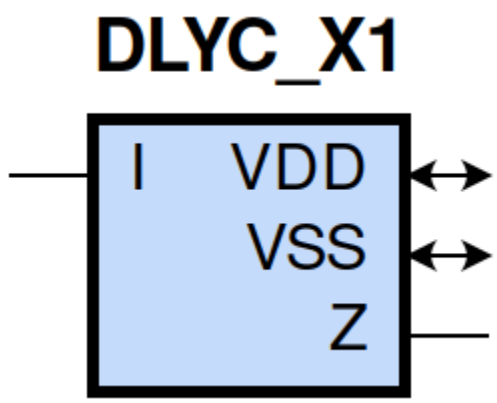

gf180mcu_fd_sc_mcu9t5v0__dlyc_1 schematic

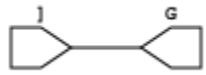

gf180mcu_fd_sc_mcu9t5v0__dlyc_1 layout

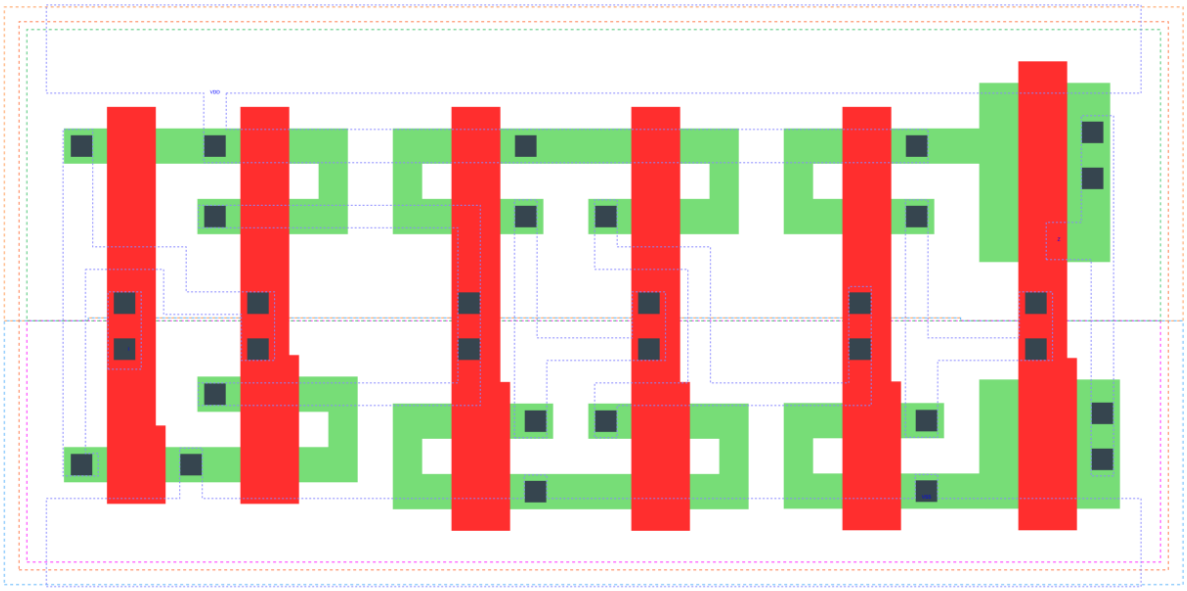

DLYC_X1 is a 8 buffer delay cell with 1X drive strength

Attributes

Attribute	Value
area	56.448000 μm^2

OUTPUT FUNCTIONS

Output Pin	Function
Z	I

TRUTH TABLE FOR Z

I	Z
1	1
0	0

FUNCTIONAL SCHEMATIC

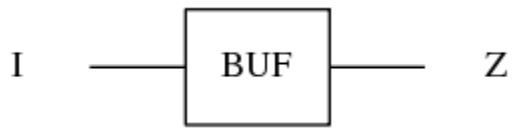

PIN CAPACITANCE (pf)

Pin	Type	Capacitance (pf)
I	input	0.0026

DELAY AND OUTPUT TRANSITION TIME corresponding to min slew and load

Input Pin	Output	When Condition	Tin (ns)	Out Load (pf)	Delay (ns)	Tout (ns)
I(LH)	Z(LH)	default	0.0100	0.0010	1.3304	0.0527
I(HL)	Z(HL)	default	0.0100	0.0010	1.4221	0.0827

DYNAMIC ENERGY

Input Pin	When Condition	Tin (ns)	Output	Out Load (pf)	Energy (uW/MHz)
I	default	0.0100	Z(LH)	0.0010	0.5199
I	default	0.0100	Z(HL)	0.0010	0.6794

LEAKAGE POWER

When Condition	Power (nW)
!I	0.2076
I	0.2046

gf180mcu_fd_sc_mcu9t5v0__dlyc_2

gf180mcu_fd_sc_mcu9t5v0__dlyc_2 symbol

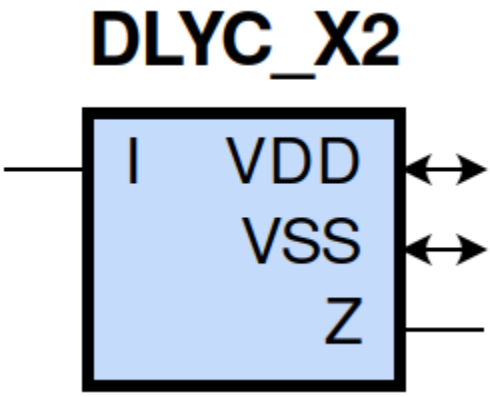

gf180mcu_fd_sc_mcu9t5v0__dlyc_2 schematic

gf180mcu_fd_sc_mcu9t5v0__dlyc_2 layout

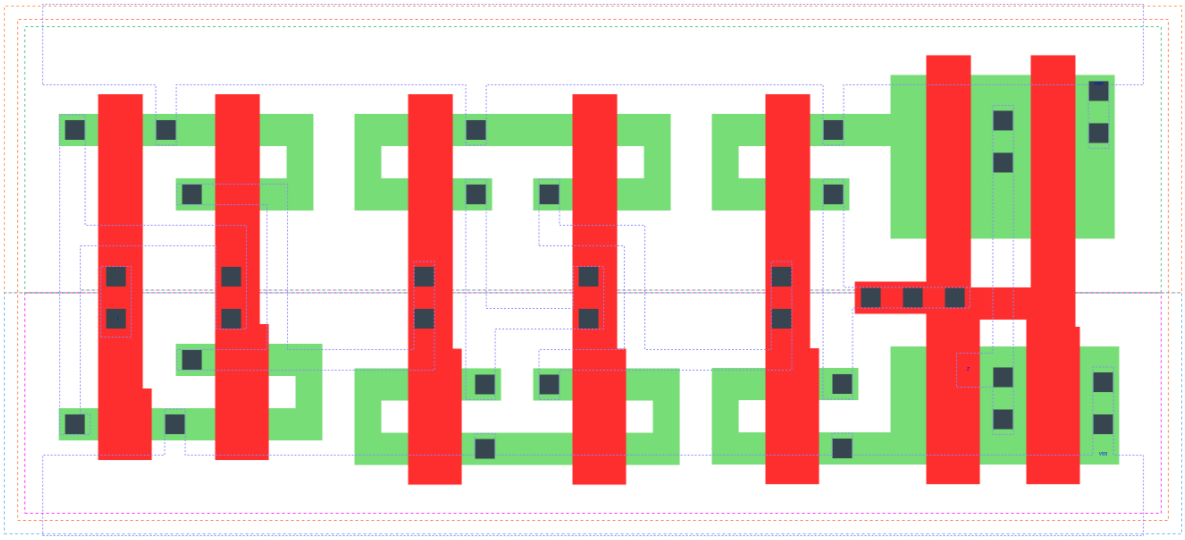

DLYC_X2 is a 8 buffer delay cell with 2X drive strength

Attributes

Attribute	Value
area	62.092800 μm^2

OUTPUT FUNCTIONS

Output Pin	Function
Z	I

TRUTH TABLE FOR Z

I	Z
1	1
0	0

FUNCTIONAL SCHEMATIC

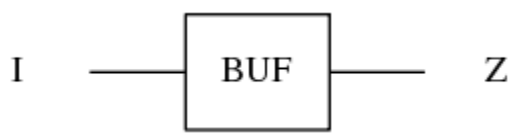

PIN CAPACITANCE (pf)

Pin	Type	Capacitance (pf)
I	input	0.0026

DELAY AND OUTPUT TRANSITION TIME corresponding to min slew and load

Input Pin	Output	When Condition	Tin (ns)	Out Load (pf)	Delay (ns)	Tout (ns)
I(LH)	Z(LH)	default	0.0100	0.0010	1.4650	0.0580
I(HL)	Z(HL)	default	0.0100	0.0010	1.6825	0.1169

DYNAMIC ENERGY

Input Pin	When Condition	Tin (ns)	Output	Out Load (pf)	Energy (uW/MHz)
I	default	0.0100	Z(LH)	0.0010	0.8259
I	default	0.0100	Z(HL)	0.0010	1.4143

LEAKAGE POWER

When Condition	Power (nW)
!I	0.2344
I	0.2302

gf180mcu_fd_sc_mcu9t5v0__dlyc_4

gf180mcu_fd_sc_mcu9t5v0__dlyc_4 symbol

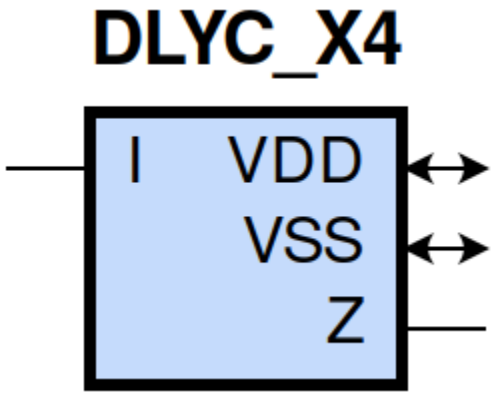

gf180mcu_fd_sc_mcu9t5v0__dlyc_4 schematic

gf180mcu_fd_sc_mcu9t5v0__dlyc_4 layout

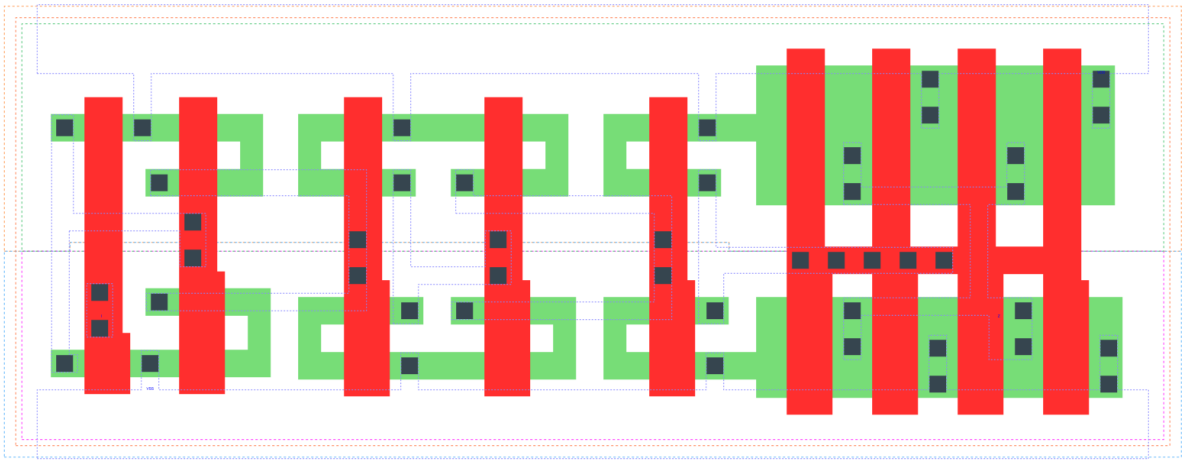

DLYC_X4 is a 8 buffer delay cell with 4X drive strength

Attributes

Attribute	Value
area	73.382400 μm^2

OUTPUT FUNCTIONS

Output Pin	Function
Z	I

TRUTH TABLE FOR Z

I	Z
1	1
0	0

FUNCTIONAL SCHEMATIC

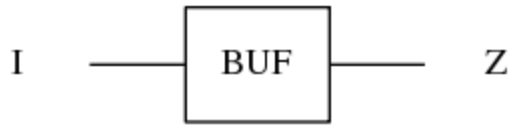

PIN CAPACITANCE (pf)

Pin	Type	Capacitance (pf)
I	input	0.0026

DELAY AND OUTPUT TRANSITION TIME corresponding to min slew and load

Input Pin	Output	When Condition	Tin (ns)	Out Load (pf)	Delay (ns)	Tout (ns)
I(LH)	Z(LH)	default	0.0100	0.0010	1.6952	0.0840
I(HL)	Z(HL)	default	0.0100	0.0010	2.2065	0.2036

DYNAMIC ENERGY

Input Pin	When Condition	Tin (ns)	Output	Out Load (pf)	Energy (uW/MHz)
I	default	0.0100	Z(LH)	0.0010	1.8508
I	default	0.0100	Z(HL)	0.0010	4.1003

LEAKAGE POWER

When Condition	Power (nW)
!I	0.2881
I	0.2814

gf180mcu_fd_sc_mcu9t5v0__dlyd_1

gf180mcu_fd_sc_mcu9t5v0__dlyd_1 symbol

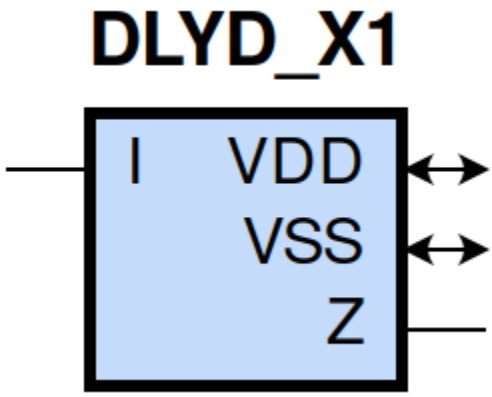

gf180mcu_fd_sc_mcu9t5v0__dlyd_1 schematic

gf180mcu_fd_sc_mcu9t5v0__dlyd_1 layout

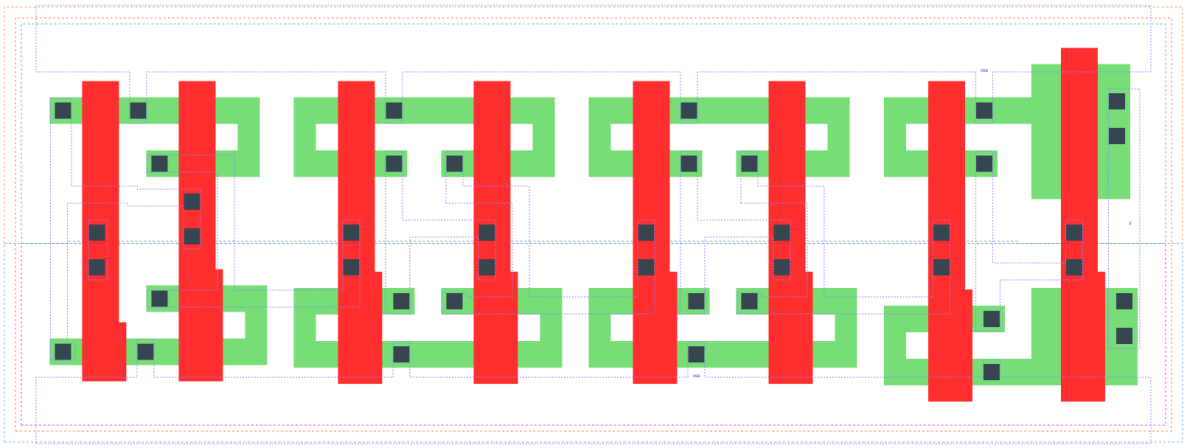

DLYD_X1 is a 16 buffer delay cell with 1X drive strength

Attributes

Attribute	Value
area	76.204800 μm^2

OUTPUT FUNCTIONS

Output Pin	Function
Z	I

TRUTH TABLE FOR Z

I	Z
1	1
0	0

FUNCTIONAL SCHEMATIC

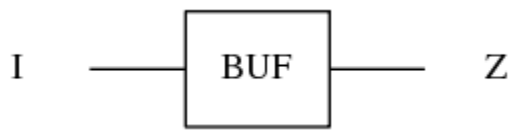

PIN CAPACITANCE (pf)

Pin	Type	Capacitance (pf)
I	input	0.0026

DELAY AND OUTPUT TRANSITION TIME corresponding to min slew and load

Input Pin	Output	When Condition	Tin (ns)	Out Load (pf)	Delay (ns)	Tout (ns)
I(LH)	Z(LH)	default	0.0100	0.0010	1.8722	0.0531
I(HL)	Z(HL)	default	0.0100	0.0010	1.9571	0.0834

DYNAMIC ENERGY

Input Pin	When Condition	Tin (ns)	Output	Out Load (pf)	Energy (uW/MHz)
I	default	0.0100	Z(LH)	0.0010	0.6698
I	default	0.0100	Z(HL)	0.0010	0.8201

LEAKAGE POWER

When Condition	Power (nW)
!I	0.2591
I	0.2562

gf180mcu_fd_sc_mcu9t5v0__dlyd_2

gf180mcu_fd_sc_mcu9t5v0__dlyd_2 symbol

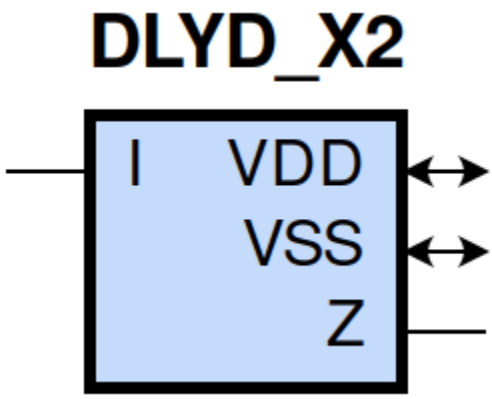

gf180mcu_fd_sc_mcu9t5v0__dlyd_2 schematic

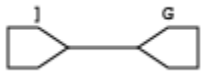

gf180mcu_fd_sc_mcu9t5v0__dlyd_2 layout

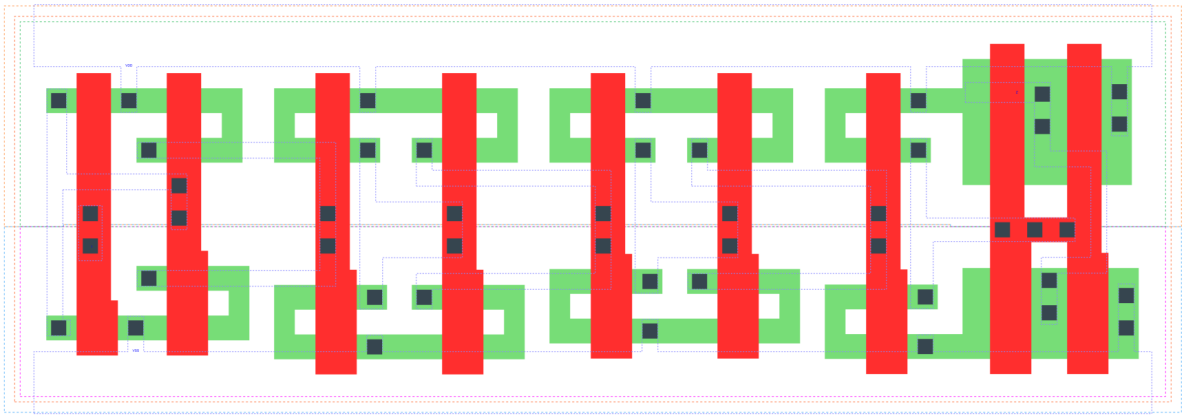

DLYD_X2 is a 16 buffer delay cell with 2X drive strength

Attributes

Attribute	Value
area	81.849600 μm^2

OUTPUT FUNCTIONS

Output Pin	Function
Z	I

TRUTH TABLE FOR Z

I	Z
1	1
0	0

FUNCTIONAL SCHEMATIC

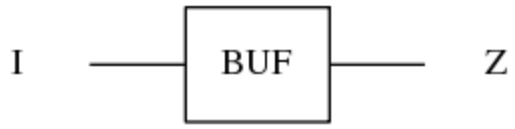

PIN CAPACITANCE (pf)

Pin	Type	Capacitance (pf)
I	input	0.0026

DELAY AND OUTPUT TRANSITION TIME corresponding to min slew and load

Input Pin	Output	When Condition	Tin (ns)	Out Load (pf)	Delay (ns)	Tout (ns)
I(LH)	Z(LH)	default	0.0100	0.0010	2.0244	0.0595
I(HL)	Z(HL)	default	0.0100	0.0010	2.2381	0.1196

DYNAMIC ENERGY

Input Pin	When Condition	Tin (ns)	Output	Out Load (pf)	Energy (uW/MHz)
I	default	0.0100	Z(LH)	0.0010	0.9891
I	default	0.0100	Z(HL)	0.0010	1.5646

LEAKAGE POWER

When Condition	Power (nW)
!I	0.2860
I	0.2818

gf180mcu_fd_sc_mcu9t5v0__dlyd_4

gf180mcu_fd_sc_mcu9t5v0__dlyd_4 symbol

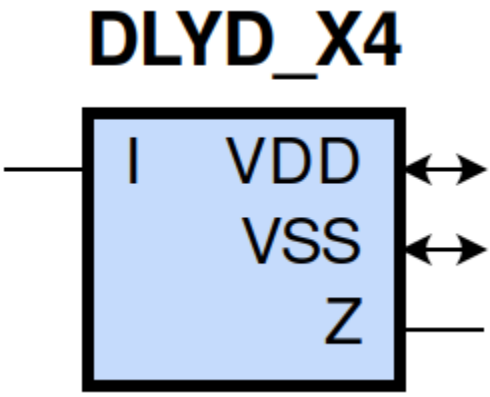

gf180mcu_fd_sc_mcu9t5v0__dlyd_4 schematic

gf180mcu_fd_sc_mcu9t5v0__dlyd_4 layout

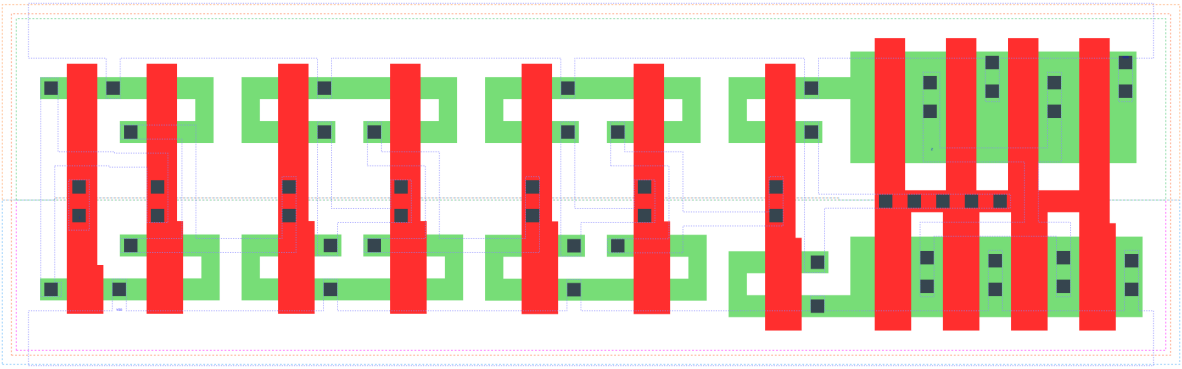

DLYD_X4 is a 16 buffer delay cell with 4X drive strength

Attributes

Attribute	Value
area	93.139200 μm^2

OUTPUT FUNCTIONS

Output Pin	Function
Z	I

TRUTH TABLE FOR Z

I	Z
1	1
0	0

FUNCTIONAL SCHEMATIC

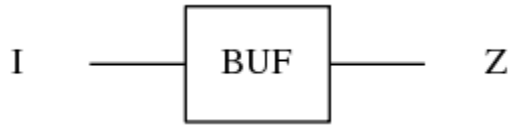

PIN CAPACITANCE (pf)

Pin	Type	Capacitance (pf)
I	input	0.0026

DELAY AND OUTPUT TRANSITION TIME corresponding to min slew and load

Input Pin	Output	When Condition	Tin (ns)	Out Load (pf)	Delay (ns)	Tout (ns)
I(LH)	Z(LH)	default	0.0100	0.0010	2.2826	0.0859
I(HL)	Z(HL)	default	0.0100	0.0010	2.7913	0.2053

DYNAMIC ENERGY

Input Pin	When Condition	Tin (ns)	Output	Out Load (pf)	Energy (uW/MHz)
I	default	0.0100	Z(LH)	0.0010	2.0253
I	default	0.0100	Z(HL)	0.0010	4.2800

LEAKAGE POWER

When Condition	Power (nW)
!I	0.3397
I	0.3329

gf180mcu_fd_sc_mcu9t5v0__endcap

gf180mcu_fd_sc_mcu9t5v0__endcap symbol

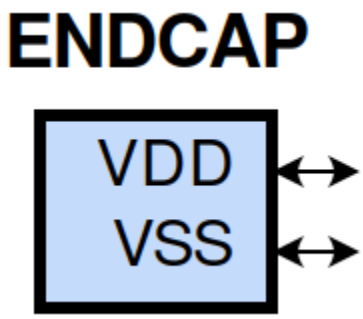

gf180mcu_fd_sc_mcu9t5v0__endcap schematic

gf180mcu_fd_sc_mcu9t5v0__endcap layout

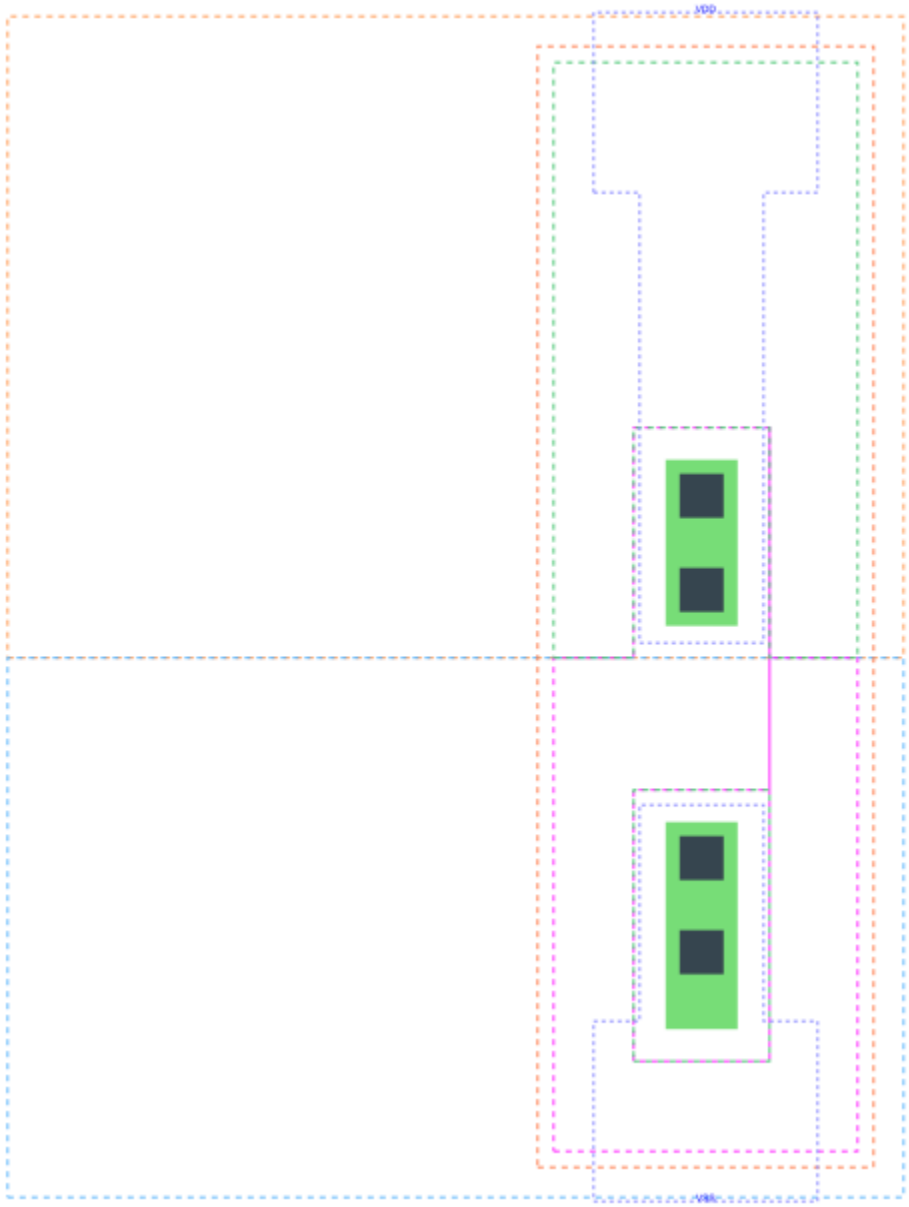

ENDCAP is a row end closure cell

Attributes

Attribute	Value
area	5.644800 μm^2

FUNCTIONAL SCHEMATIC

LEAKAGE POWER

When Condition	Power (nW)
default	0.0500

gf180mcu_fd_sc_mcu9t5v0__fill_1

gf180mcu_fd_sc_mcu9t5v0__fill_1 symbol

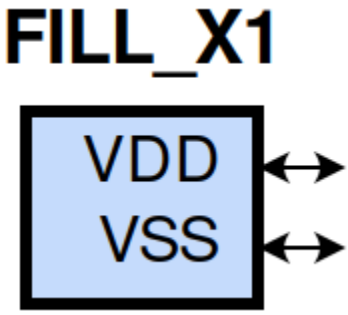

gf180mcu_fd_sc_mcu9t5v0__fill_1 schematic

gf180mcu_fd_sc_mcu9t5v0__fill_1 layout

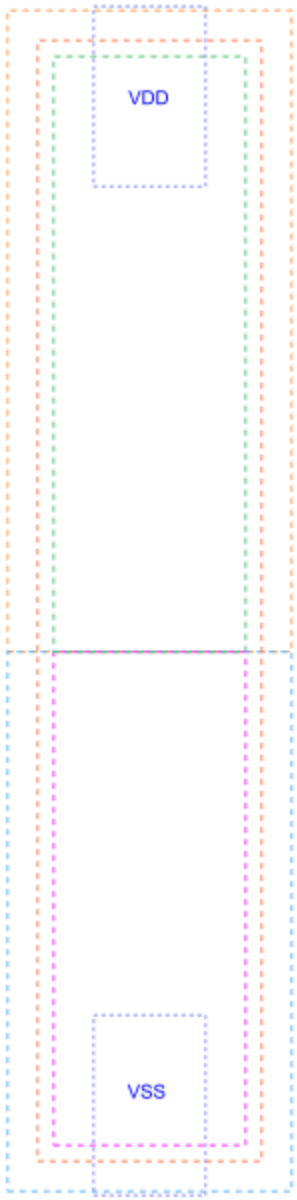

FILL_X1 is a filler whose cell width is .56um

Attributes

Attribute	Value
area	2.822400 μm^2

FUNCTIONAL SCHEMATIC

LEAKAGE POWER

When Condition	Power (nW)
default	0.0500

gf180mcu_fd_sc_mcu9t5v0__fill_x16

gf180mcu_fd_sc_mcu9t5v0__fill_x16 symbol

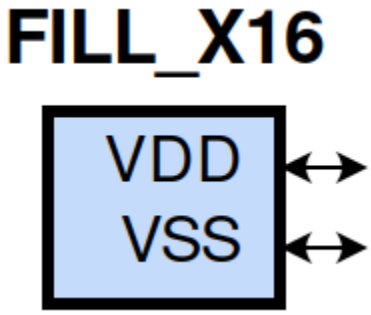

gf180mcu_fd_sc_mcu9t5v0__fill_x16 schematic

gf180mcu_fd_sc_mcu9t5v0__fill_x16 layout

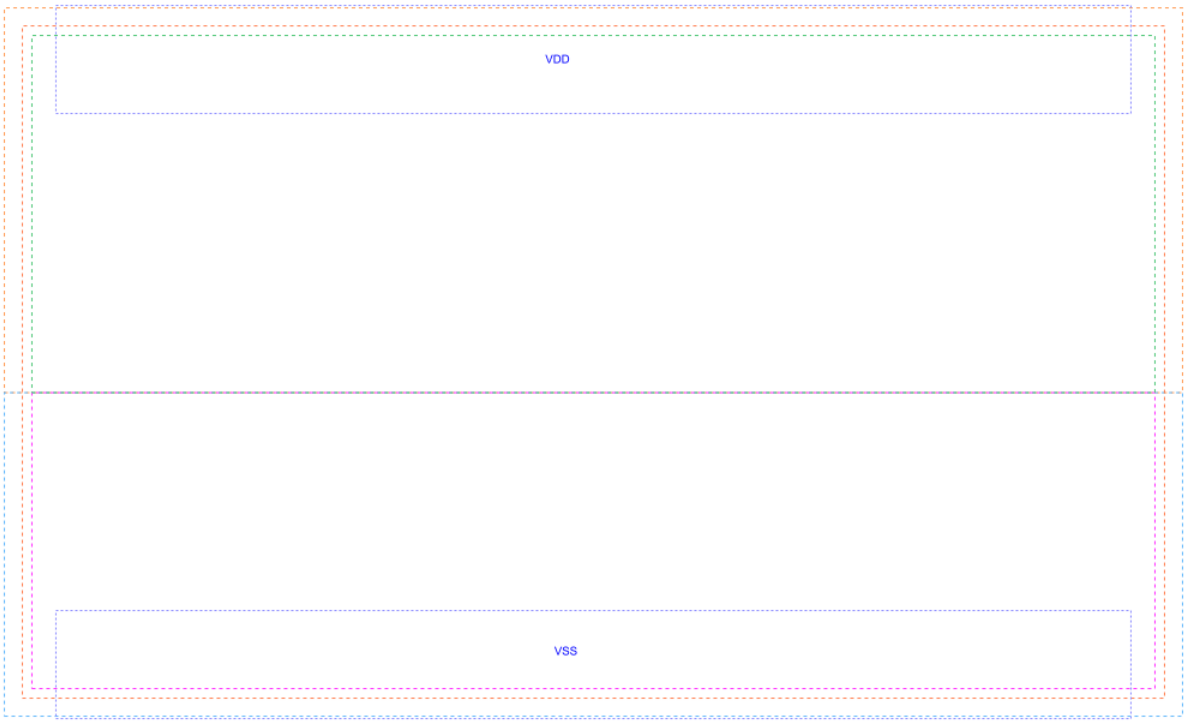

FILL_X16 is a filler whose cell width is 8.96um

Attributes

Attribute	Value
area	45.158400 μm^2

FUNCTIONAL SCHEMATIC

LEAKAGE POWER

When Condition	Power (nW)
default	0.0500

gf180mcu_fd_sc_mcu9t5v0__fill_2

gf180mcu_fd_sc_mcu9t5v0__fill_2 symbol

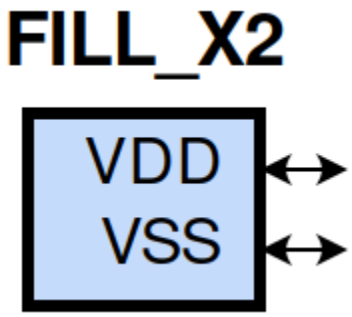

gf180mcu_fd_sc_mcu9t5v0__fill_2 schematic

gf180mcu_fd_sc_mcu9t5v0__fill_2 layout

FILL_X2 is a filler whose cell width is 1.12um

Attributes

Attribute	Value
area	5.644800 μm^2

FUNCTIONAL SCHEMATIC

LEAKAGE POWER

When Condition	Power (nW)
default	0.0500

gf180mcu_fd_sc_mcu9t5v0__fill_x32

gf180mcu_fd_sc_mcu9t5v0__fill_x32 symbol

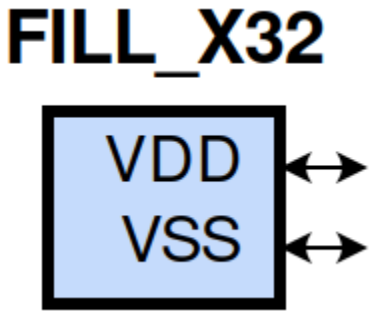

gf180mcu_fd_sc_mcu9t5v0__fill_x32 schematic

gf180mcu_fd_sc_mcu9t5v0__fill_x32 layout

FILL_X32 is a filler whose cell width is 17.92um

Attributes

Attribute	Value
area	90.316800 μm^2

FUNCTIONAL SCHEMATIC

LEAKAGE POWER

When Condition	Power (nW)
default	0.0500

gf180mcu_fd_sc_mcu9t5v0__fill_4

gf180mcu_fd_sc_mcu9t5v0__fill_4 symbol

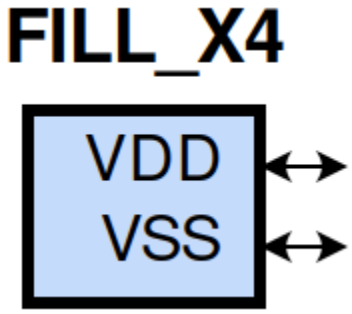

gf180mcu_fd_sc_mcu9t5v0__fill_4 schematic

gf180mcu_fd_sc_mcu9t5v0__fill_4 layout

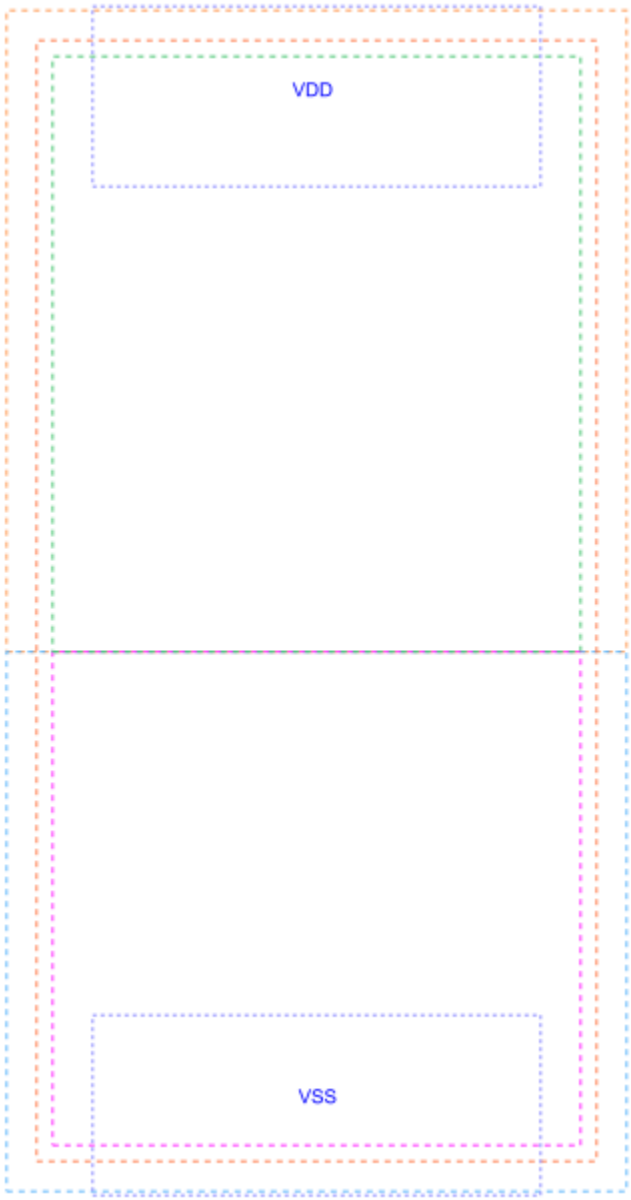

FILL_X4 is a filler whose cell width is 2.24um

Attributes

Attribute	Value
area	11.289600 μm^2

FUNCTIONAL SCHEMATIC

LEAKAGE POWER

When Condition	Power (nW)
default	0.0500

gf180mcu_fd_sc_mcu9t5v0__fill_x64

gf180mcu_fd_sc_mcu9t5v0__fill_x64 symbol

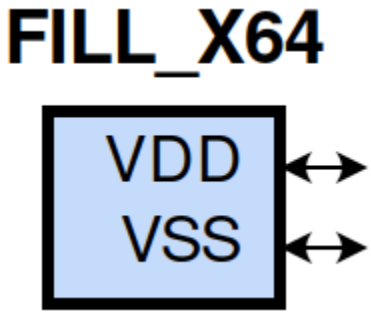

gf180mcu_fd_sc_mcu9t5v0__fill_x64 schematic

gf180mcu_fd_sc_mcu9t5v0__fill_x64 layout

FILL_X64 is a filler whose cell width is 35.84um

Attributes

Attribute	Value
area	180.633600 μm^2

FUNCTIONAL SCHEMATIC

LEAKAGE POWER

When Condition	Power (nW)
default	0.0500

gf180mcu_fd_sc_mcu9t5v0__fill_8

gf180mcu_fd_sc_mcu9t5v0__fill_8 symbol

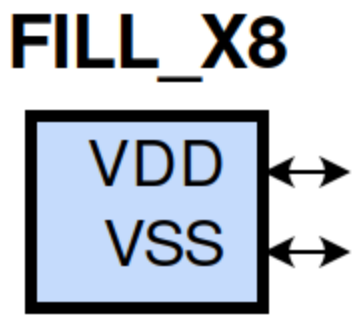

gf180mcu_fd_sc_mcu9t5v0__fill_8 schematic

gf180mcu_fd_sc_mcu9t5v0__fill_8 layout

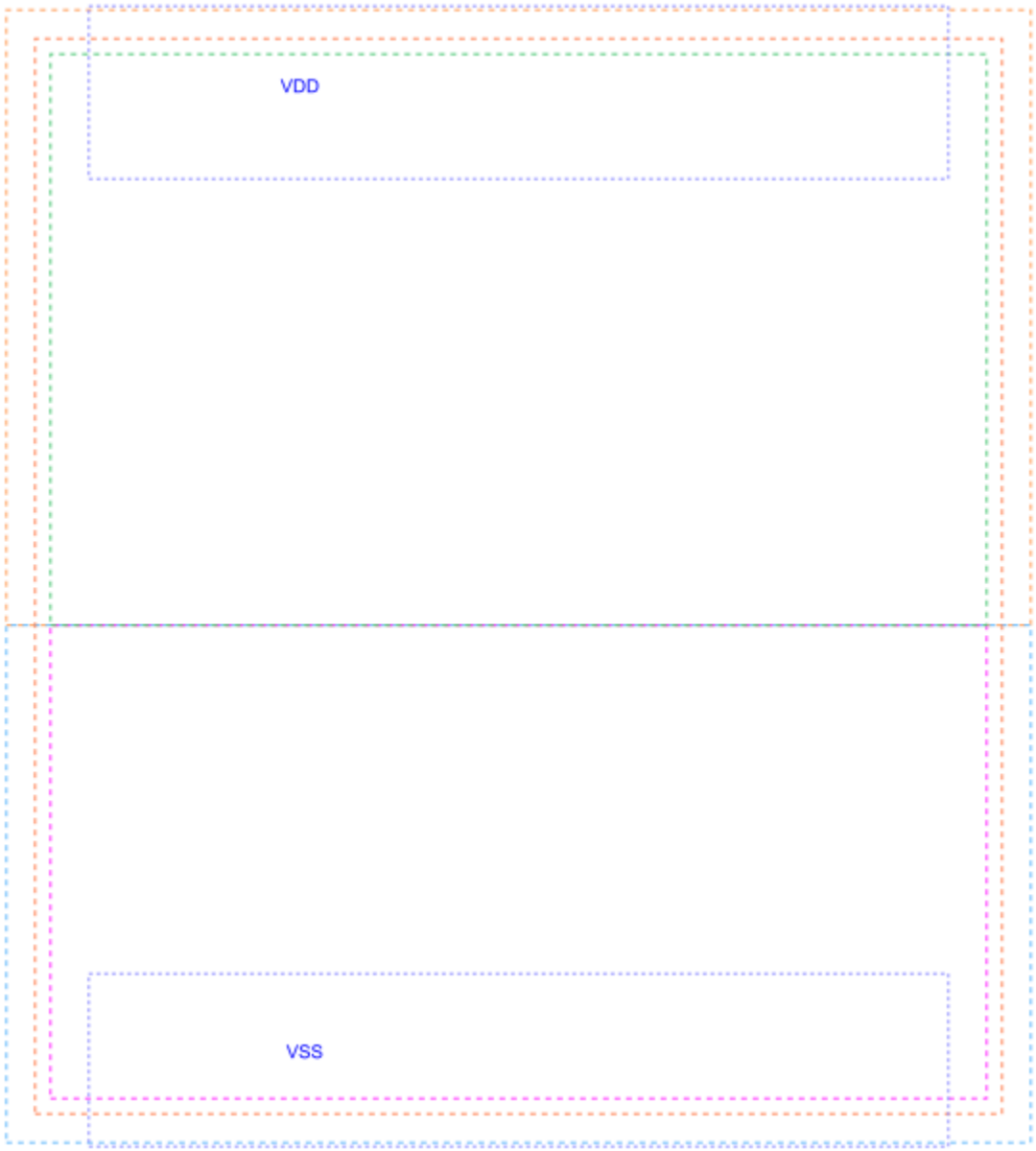

FILL_X8 is a filler whose cell width is 4.48um

Attributes

Attribute	Value
area	22.579200 μm^2

FUNCTIONAL SCHEMATIC

LEAKAGE POWER

When Condition	Power (nW)
default	0.0500

gf180mcu_fd_sc_mcu9t5v0__fillcap_x16

gf180mcu_fd_sc_mcu9t5v0__fillcap_x16 symbol

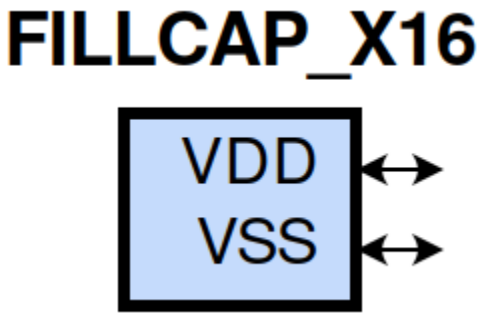

gf180mcu_fd_sc_mcu9t5v0__fillcap_x16 schematic

gf180mcu_fd_sc_mcu9t5v0__fillcap_x16 layout

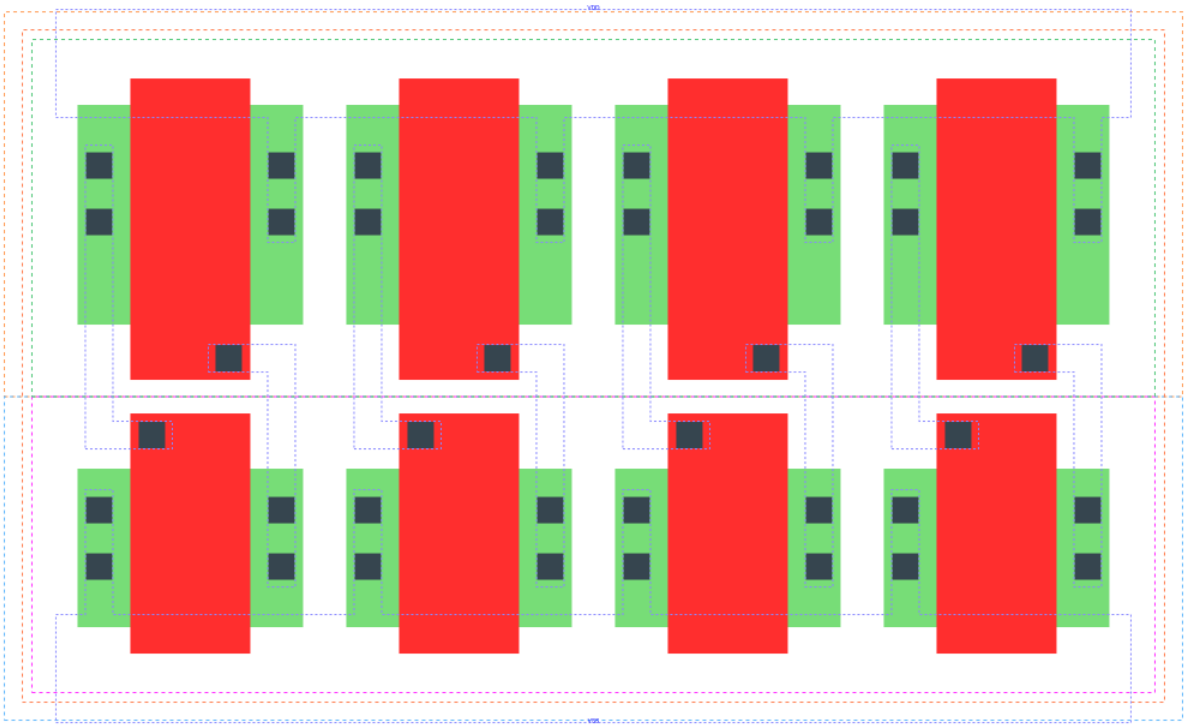

FILLCAP_X16 is a filler whose cell width is 8.96um with decoupling cap between VDD and VSS

Attributes

Attribute	Value
area	45.158400 μm^2

FUNCTIONAL SCHEMATIC

LEAKAGE POWER

When Condition	Power (nW)
default	0.0500

gf180mcu_fd_sc_mcu9t5v0__fillcap_x32

gf180mcu_fd_sc_mcu9t5v0__fillcap_x32 symbol

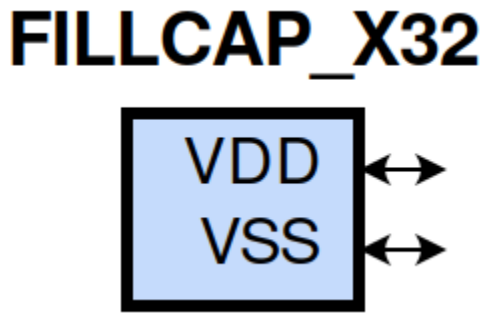

gf180mcu_fd_sc_mcu9t5v0__fillcap_x32 schematic

gf180mcu_fd_sc_mcu9t5v0__fillcap_x32 layout

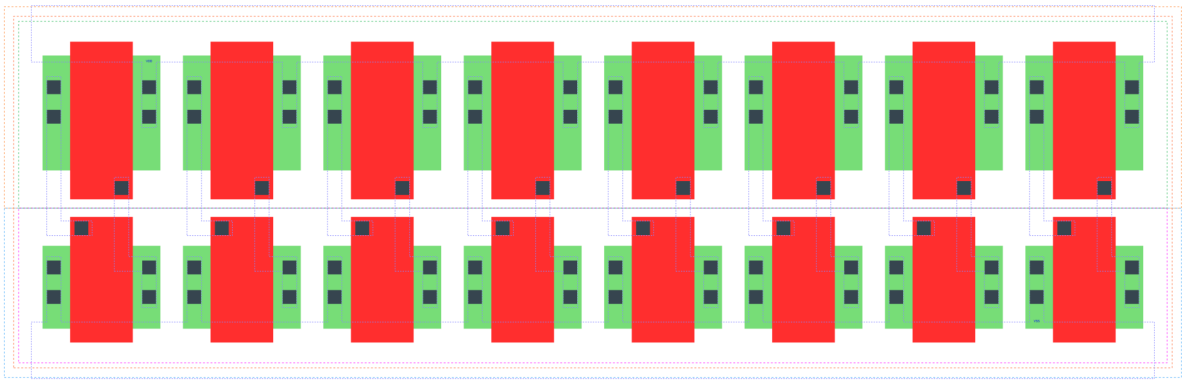

FILLCAP_X32 is a filler whose cell width is 17.92um with decoupling cap between VDD and VSS

Attributes

Attribute	Value
area	90.316800 μm^2

FUNCTIONAL SCHEMATIC

LEAKAGE POWER

When Condition	Power (nW)
default	0.0500

gf180mcu_fd_sc_mcu9t5v0__fillcap_4

gf180mcu_fd_sc_mcu9t5v0__fillcap_4 symbol

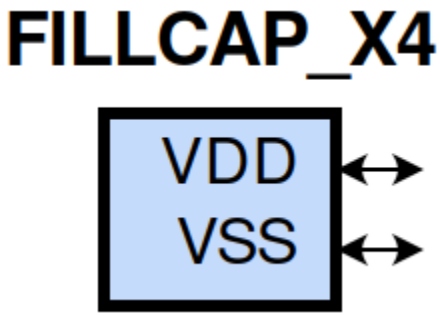

gf180mcu_fd_sc_mcu9t5v0__fillcap_4 schematic

gf180mcu_fd_sc_mcu9t5v0__fillcap_4 layout

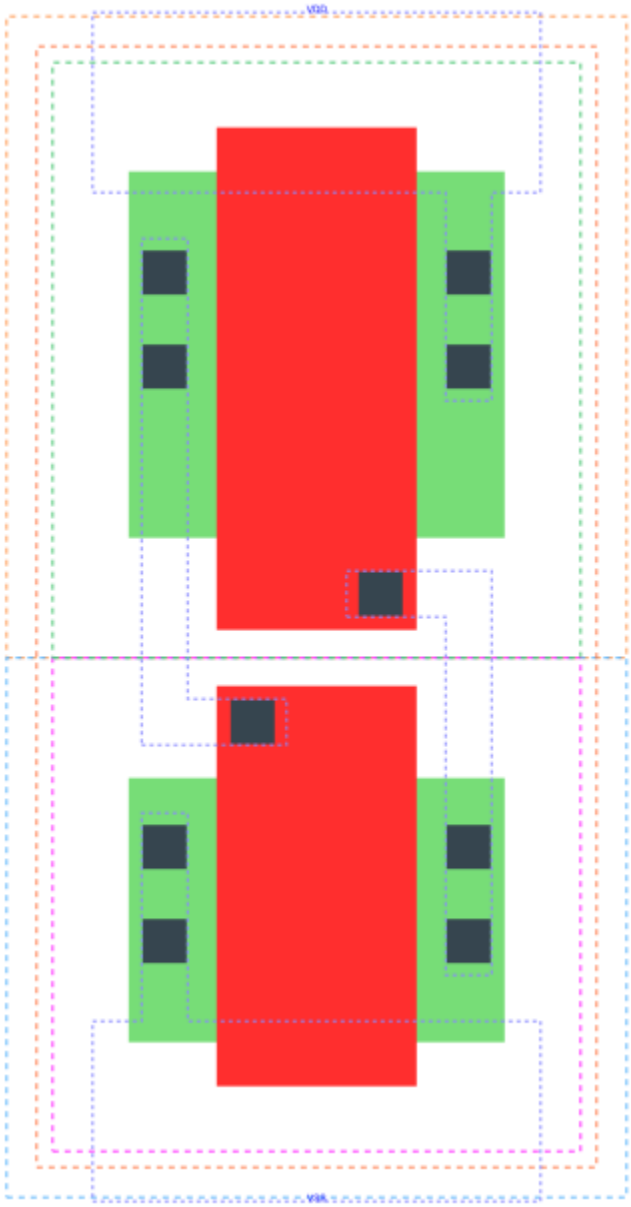

FILLCAP_X4 is a filler whose cell width is 2.24um with decoupling cap between VDD and VSS

Attributes

Attribute	Value
area	11.289600 μm^2

FUNCTIONAL SCHEMATIC

LEAKAGE POWER

When Condition	Power (nW)
default	0.0500

gf180mcu_fd_sc_mcu9t5v0__fillcap_x64

gf180mcu_fd_sc_mcu9t5v0__fillcap_x64 symbol

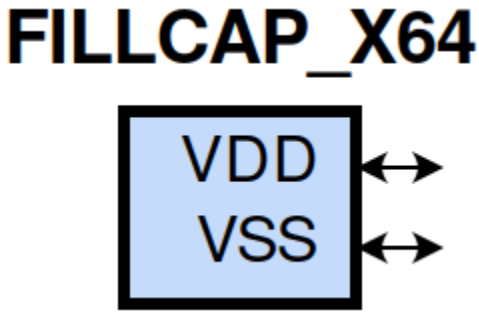

gf180mcu_fd_sc_mcu9t5v0__fillcap_x64 schematic

gf180mcu_fd_sc_mcu9t5v0__fillcap_x64 layout

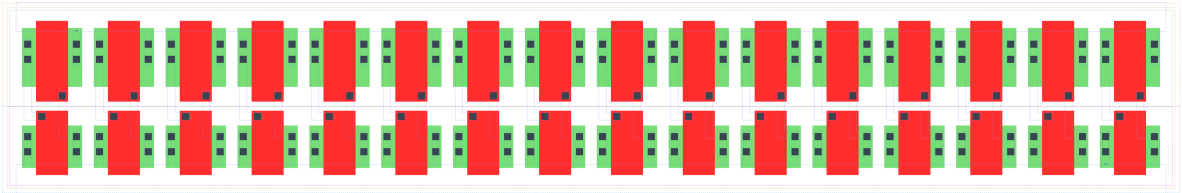

FILLCAP_X64 is a filler whose cell width is 35.84um with decoupling cap between VDD and VSS

Attributes

Attribute	Value
area	180.633600 μm^2

FUNCTIONAL SCHEMATIC

LEAKAGE POWER

When Condition	Power (nW)
default	0.0500

gf180mcu_fd_sc_mcu9t5v0__fillcap_8

gf180mcu_fd_sc_mcu9t5v0__fillcap_8 symbol

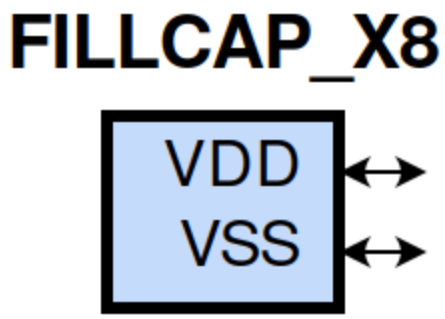

gf180mcu_fd_sc_mcu9t5v0__fillcap_8 schematic

gf180mcu_fd_sc_mcu9t5v0__fillcap_8 layout

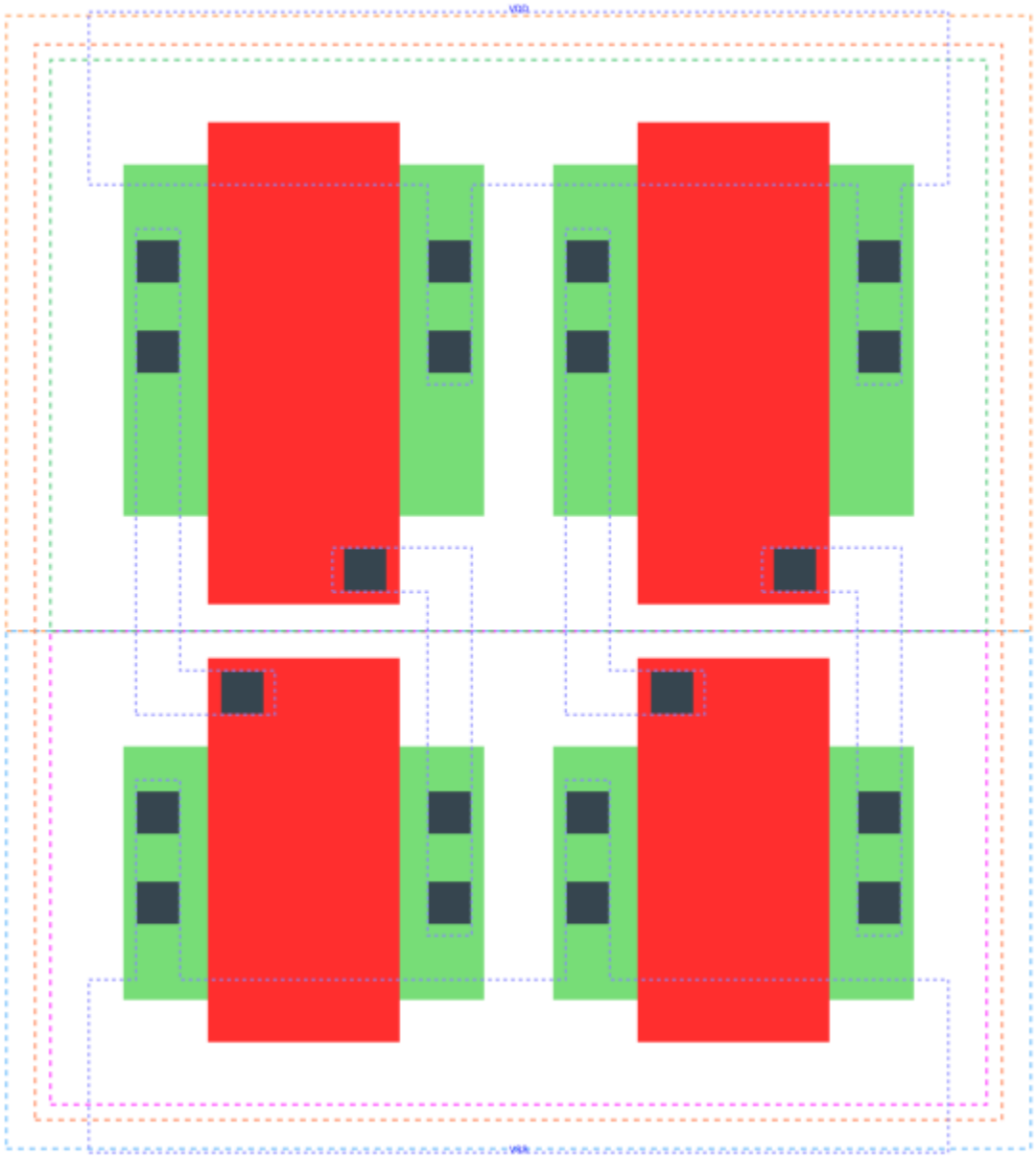

FILLCAP_X8 is a filler whose width is 4.48um with decoupling cap between VDD and VSS

Attributes

Attribute	Value
area	22.579200 μm^2

FUNCTIONAL SCHEMATIC

LEAKAGE POWER

When Condition	Power (nW)
default	0.0500

gf180mcu_fd_sc_mcu9t5v0__filltie

gf180mcu_fd_sc_mcu9t5v0__filltie symbol

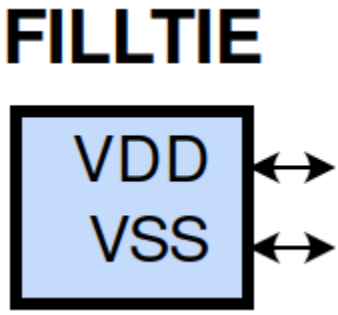

gf180mcu_fd_sc_mcu9t5v0__filltie schematic

gf180mcu_fd_sc_mcu9t5v0__filltie layout

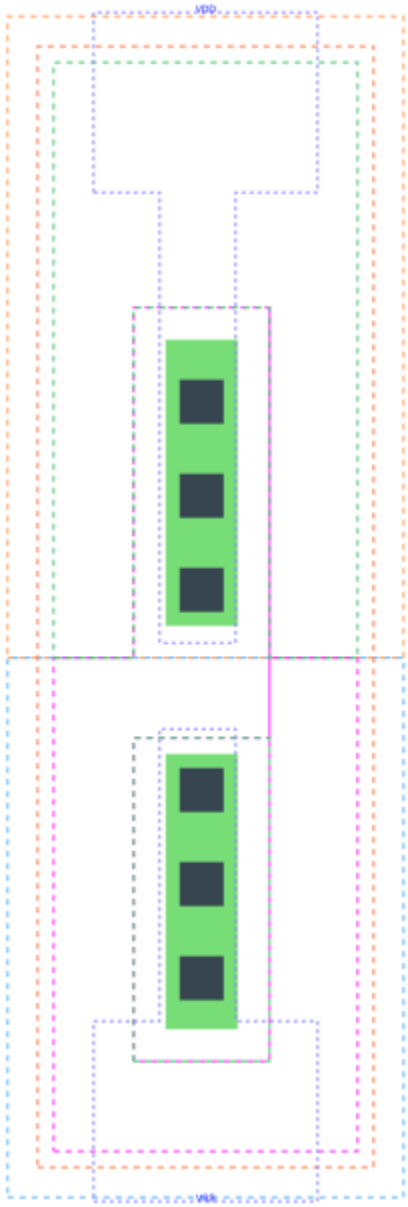

FILLTIE is a filler with well and substrate tap

Attributes

Attribute	Value
area	5.644800 μm^2

FUNCTIONAL SCHEMATIC

LEAKAGE POWER

When Condition	Power (nW)
default	0.0500

gf180mcu_fd_sc_mcu9t5v0__hold

gf180mcu_fd_sc_mcu9t5v0__hold symbol

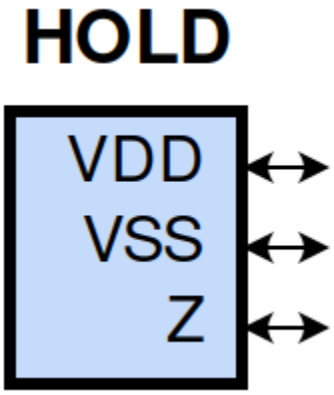

gf180mcu_fd_sc_mcu9t5v0__hold schematic

gf180mcu_fd_sc_mcu9t5v0__hold layout

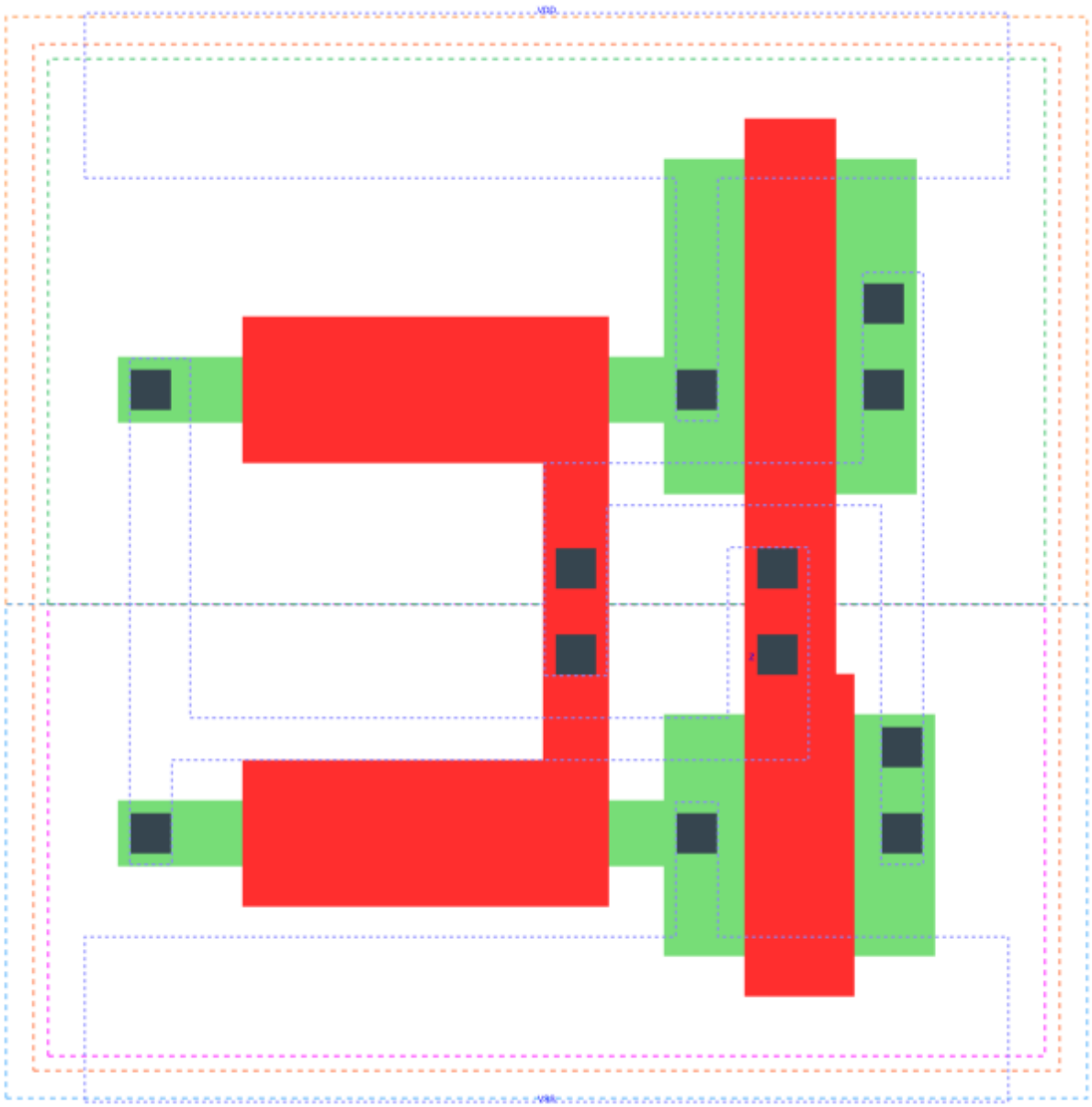

HOLD is a state holder cell

Attributes

Attribute	Value
area	25.401600 μm^2
area	bus_hold μm^2

OUTPUT FUNCTIONS

Output Pin	Function
Z	Z

TRUTH TABLE FOR Z

Z

FUNCTIONAL SCHEMATIC

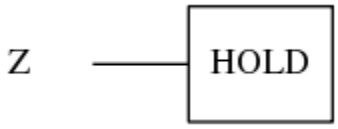

PIN CAPACITANCE (pf)

Pin	Type	Capacitance (pf)
Z	inout	0.0199

DYNAMIC ENERGY

Input Pin	When Condition	Tin (ns)	Energy (uW/MHz)
Z(HL)	default	0.0100	0.2470
Z(LH)	default	0.0100	0.0013

LEAKAGE POWER

When Condition	Power (nW)
!Z	0.1009
Z	0.1009

gf180mcu_fd_sc_mcu9t5v0__icgtn_1

gf180mcu_fd_sc_mcu9t5v0__icgtn_1 symbol

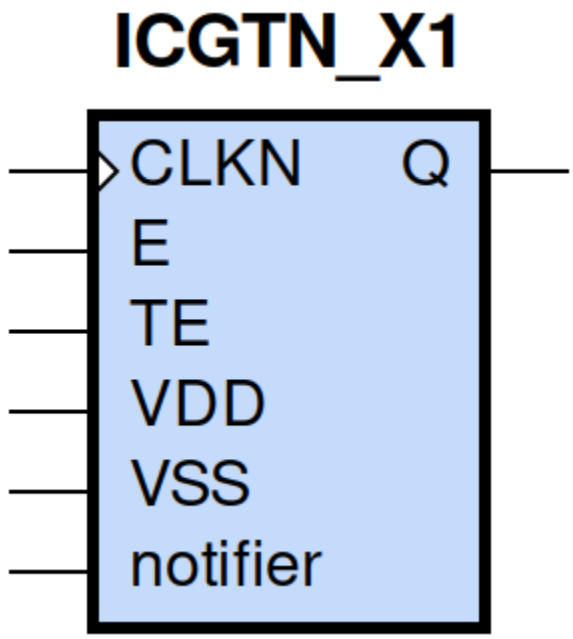

gf180mcu_fd_sc_mcu9t5v0__icgtn_1 schematic

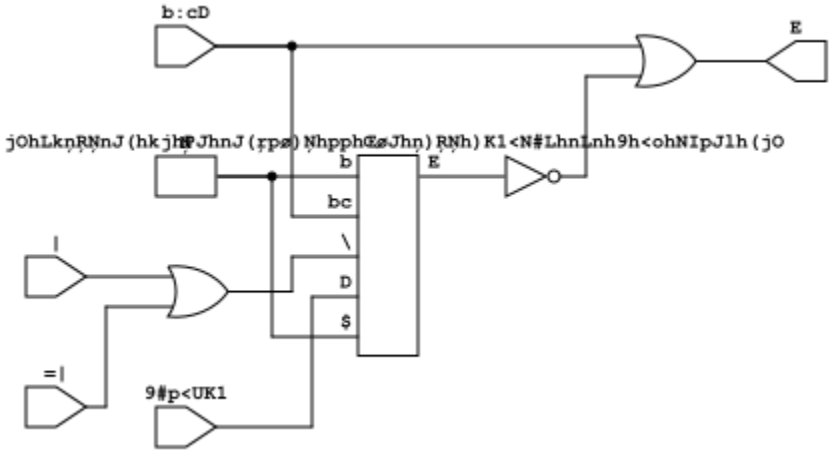

gf180mcu_fd_sc_mcu9t5v0__icgtn_1 layout

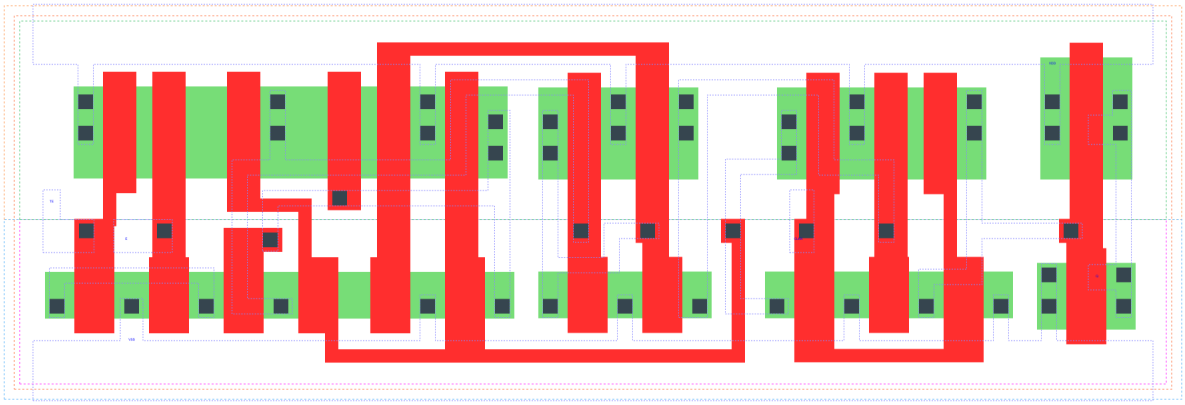

ICGTN_X1 is a negative-edge triggered clock-gating latch with 1X drive strength

Attributes

Attribute	Value
area	true µm^2
area	latch_negedge_precontrol µm^2
area	true µm^2
area	true µm^2
area	84.672000 µm^2
area	true µm^2

TRUTH TABLE

TE	E	CLKN	QDN(n+1)	Q(n+1)
L	L	H	H	H
L	H	H	L	H
H	L	H	L	H
H	H	H	L	H
X	X	L	QDN(n)	QDN(n)

FUNCTIONAL SCHEMATIC

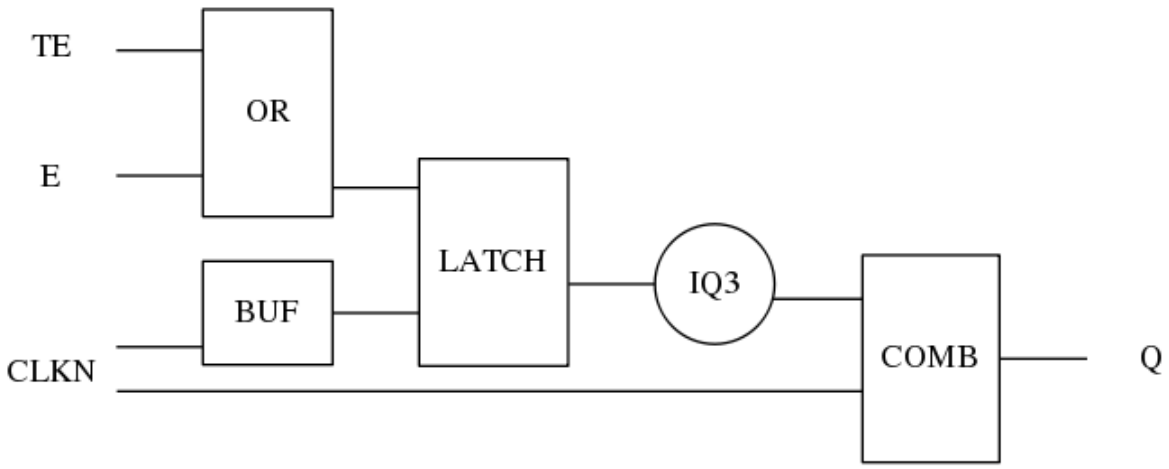

CONSTRAINTS

Constraint Pin	Related Pin	setup(ns)	hold(ns)
TE(LH)	CLKN(HL)	0.5100	-0.0690
TE(HL)	CLKN(HL)	0.4350	-0.4180
E(LH)	CLKN(HL)	0.4870	-0.0630
E(HL)	CLKN(HL)	0.4180	-0.3950

Constraint Pin	Related Pin	Minimum Pulse Width(ns)
CLKN(LHL)	CLKN(LH)	0.4370
CLKN(LHL)	CLKN(LH)	0.6990
CLKN(LHL)	CLKN(LH)	0.6690
CLKN(LHL)	CLKN(LH)	0.6320

PIN CAPACITANCE (pf)

Pin	Type	Capacitance (pf)
TE	input	0.0047
E	input	0.0046
CLKN	input	0.0098

DELAY AND OUTPUT TRANSITION TIME corresponding to min slew and load

Input Pin	Output	When Condition	Tin (ns)	Out Load (pf)	Delay (ns)	Tout (ns)
CLKN(HL)	Q(HL)	!E&TE	0.0100	0.0010	0.2061	0.0412
CLKN(HL)	Q(HL)	E&!TE	0.0100	0.0010	0.2061	0.0412
CLKN(HL)	Q(HL)	E&TE	0.0100	0.0010	0.2061	0.0412
CLKN(LH)	Q(LH)	!E&!TE	0.0100	0.0010	0.1338	0.0320
CLKN(LH)	Q(LH)	!E&TE	0.0100	0.0010	0.1340	0.0320
CLKN(LH)	Q(LH)	E&!TE	0.0100	0.0010	0.1340	0.0320
CLKN(LH)	Q(LH)	E&TE	0.0100	0.0010	0.1340	0.0320

DYNAMIC ENERGY

Input Pin	When Condition	Tin (ns)	Output	Out Load (pf)	Energy (uW/MHz)
CLKN	!E&TE	0.0100	Q(HL)	0.0010	0.5986
CLKN	E&!TE	0.0100	Q(HL)	0.0010	0.5977
CLKN	E&TE	0.0100	Q(HL)	0.0010	0.5977
CLKN	!E&!TE	0.0100	Q(LH)	0.0010	0.8947
CLKN	!E&TE	0.0100	Q(LH)	0.0010	0.3300
CLKN	E&!TE	0.0100	Q(LH)	0.0010	0.3306
CLKN	E&TE	0.0100	Q(LH)	0.0010	0.3306
E(LH)	!CLKN&!TE	0.0100	n/a	n/a	-0.0438
E(LH)	!CLKN&TE	0.0100	n/a	n/a	-0.0176
E(LH)	CLKN&!TE	0.0100	n/a	n/a	0.4176
E(LH)	CLKN&TE	0.0100	n/a	n/a	-0.0131
CLKN(LH)	!E&!TE	0.0100	n/a	n/a	0.1919
CLKN(LH)	!E&TE	0.0100	n/a	n/a	0.6679
CLKN(LH)	E&!TE	0.0100	n/a	n/a	0.6418
CLKN(LH)	E&TE	0.0100	n/a	n/a	0.6354
TE(HL)	!CLKN&!E	0.0100	n/a	n/a	0.0796
TE(HL)	CLKN&!E	0.0100	n/a	n/a	0.6644
TE(HL)	CLKN&E	0.0100	n/a	n/a	0.0445
TE(HL)	!CLKN&E	0.0100	n/a	n/a	0.0445
CLKN(HL)	!E&!TE	0.0100	n/a	n/a	0.3625
E(HL)	!CLKN&!TE	0.0100	n/a	n/a	0.0482
E(HL)	!CLKN&TE	0.0100	n/a	n/a	0.0188
E(HL)	CLKN&!TE	0.0100	n/a	n/a	0.6322
E(HL)	CLKN&TE	0.0100	n/a	n/a	0.0225
TE(LH)	!CLKN&!E	0.0100	n/a	n/a	-0.0392
TE(LH)	CLKN&!E	0.0100	n/a	n/a	0.4409
TE(LH)	CLKN&E	0.0100	n/a	n/a	-0.0390
TE(LH)	!CLKN&E	0.0100	n/a	n/a	-0.0426

LEAKAGE POWER

When Condition	Power (nW)
!CLKN&!E&!TE	0.4793
!CLKN&!E&TE	0.4325
!CLKN&E&!TE	0.4069
!CLKN&E&TE	0.4069
CLKN&!E&!TE	0.3170
CLKN&!E&TE	0.3302
CLKN&E&!TE	0.2949
CLKN&E&TE	0.2949

gf180mcu_fd_sc_mcu9t5v0__icgtn_2

gf180mcu_fd_sc_mcu9t5v0__icgtn_2 symbol

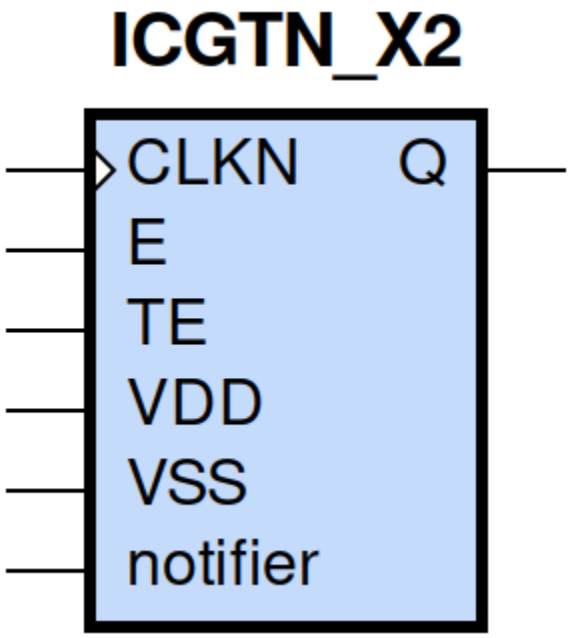

gf180mcu_fd_sc_mcu9t5v0__icgtn_2 schematic

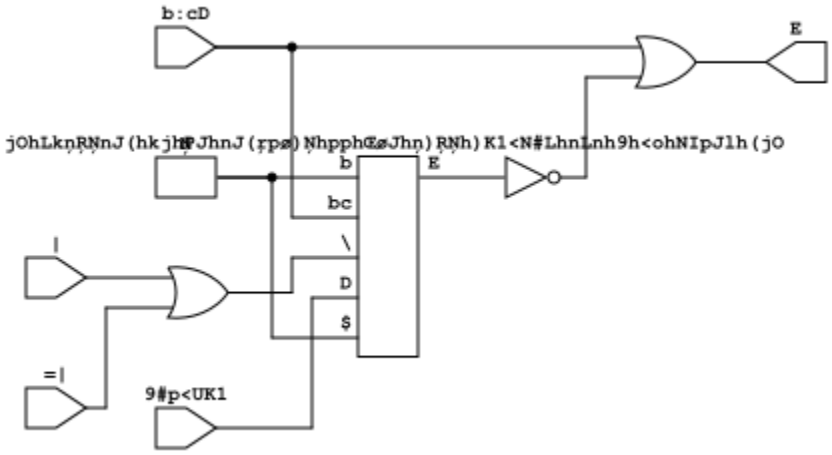

gf180mcu_fd_sc_mcu9t5v0__icgtn_2 layout

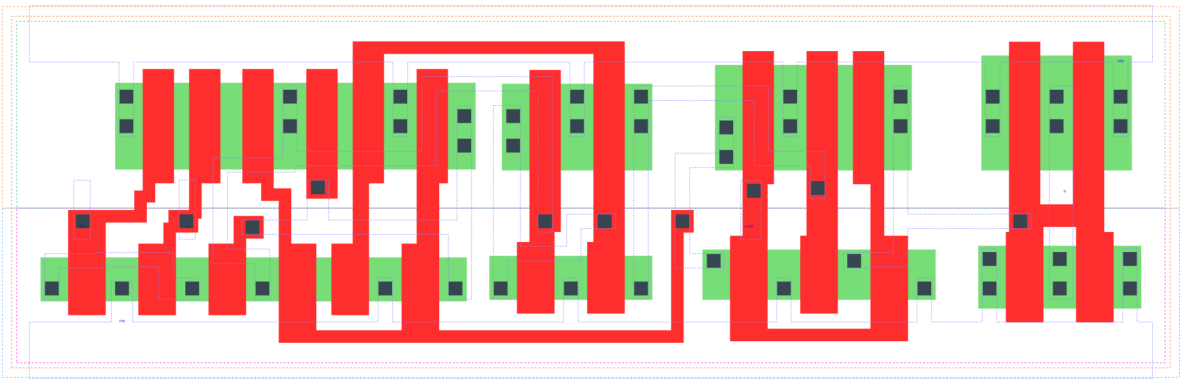

ICGTN_X2 is a negative-edge triggered clock-gating latch with 2X drive strength

Attributes

Attribute	Value
area	true μm^2
area	latch_negedge_precontrol μm^2
area	90.316800 μm^2
area	true μm^2
area	true μm^2
area	true μm^2

TRUTH TABLE

TE	E	CLKN	QDN(n+1)	Q(n+1)
L	L	H	H	H
L	H	H	L	H
H	L	H	L	H
H	H	H	L	H
X	X	L	QDN(n)	QDN(n)

FUNCTIONAL SCHEMATIC

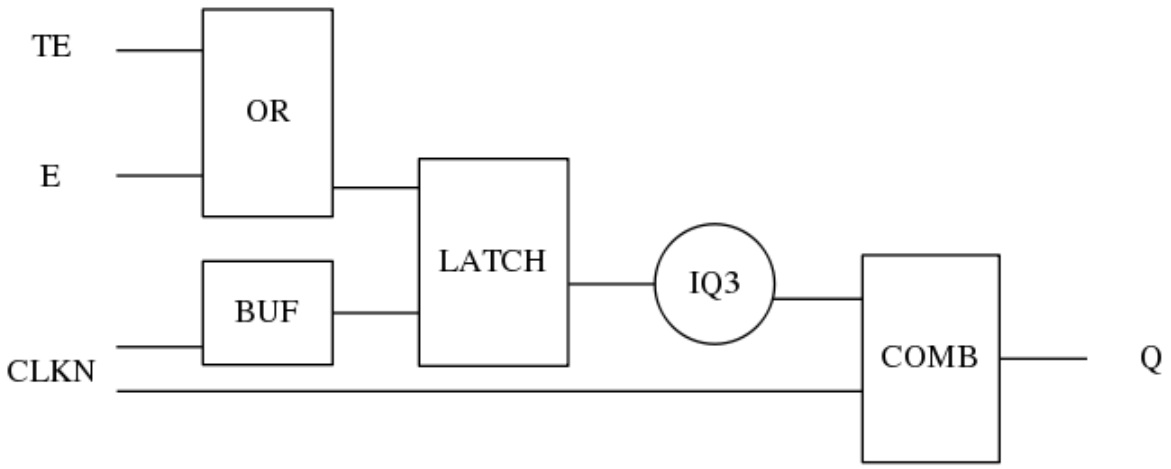

CONSTRAINTS

Constraint Pin	Related Pin	setup(ns)	hold(ns)
TE(LH)	CLKN(HL)	0.5100	-0.0860
TE(HL)	CLKN(HL)	0.4290	-0.4060
E(LH)	CLKN(HL)	0.4870	-0.0740
E(HL)	CLKN(HL)	0.4120	-0.3890

Constraint Pin	Related Pin	Minimum Pulse Width(ns)
CLKN(LHL)	CLKN(LH)	0.4170
CLKN(LHL)	CLKN(LH)	0.6810
CLKN(LHL)	CLKN(LH)	0.6500
CLKN(LHL)	CLKN(LH)	0.6140

PIN CAPACITANCE (pf)

Pin	Type	Capacitance (pf)
TE	input	0.0047
E	input	0.0047
CLKN	input	0.0112

DELAY AND OUTPUT TRANSITION TIME corresponding to min slew and load

Input Pin	Output	When Condition	Tin (ns)	Out Load (pf)	Delay (ns)	Tout (ns)
CLKN(HL)	Q(HL)	!E&TE	0.0100	0.0010	0.2303	0.0392
CLKN(HL)	Q(HL)	E&!TE	0.0100	0.0010	0.2303	0.0392
CLKN(HL)	Q(HL)	E&TE	0.0100	0.0010	0.2303	0.0392
CLKN(LH)	Q(LH)	!E&!TE	0.0100	0.0010	0.1530	0.0272
CLKN(LH)	Q(LH)	!E&TE	0.0100	0.0010	0.1530	0.0272
CLKN(LH)	Q(LH)	E&!TE	0.0100	0.0010	0.1530	0.0272
CLKN(LH)	Q(LH)	E&TE	0.0100	0.0010	0.1530	0.0272

DYNAMIC ENERGY

Input Pin	When Condition	Tin (ns)	Output	Out Load (pf)	Energy (uW/MHz)
CLKN	!E&TE	0.0100	Q(HL)	0.0010	0.7965
CLKN	E&!TE	0.0100	Q(HL)	0.0010	0.7954
CLKN	E&TE	0.0100	Q(HL)	0.0010	0.7955
CLKN	!E&!TE	0.0100	Q(LH)	0.0010	0.9898
CLKN	!E&TE	0.0100	Q(LH)	0.0010	0.4424
CLKN	E&!TE	0.0100	Q(LH)	0.0010	0.4430
CLKN	E&TE	0.0100	Q(LH)	0.0010	0.4430
E(LH)	!CLKN&!TE	0.0100	n/a	n/a	-0.0439
E(LH)	!CLKN&TE	0.0100	n/a	n/a	-0.0176
E(LH)	CLKN&!TE	0.0100	n/a	n/a	0.4095
E(LH)	CLKN&TE	0.0100	n/a	n/a	-0.0129
CLKN(LH)	!E&!TE	0.0100	n/a	n/a	0.1807
CLKN(LH)	!E&TE	0.0100	n/a	n/a	0.6500
CLKN(LH)	E&!TE	0.0100	n/a	n/a	0.6241
CLKN(LH)	E&TE	0.0100	n/a	n/a	0.6185
TE(HL)	!CLKN&!E	0.0100	n/a	n/a	0.0793
TE(HL)	CLKN&!E	0.0100	n/a	n/a	0.6479
TE(HL)	CLKN&E	0.0100	n/a	n/a	0.0445
TE(HL)	!CLKN&E	0.0100	n/a	n/a	0.0446
CLKN(HL)	!E&!TE	0.0100	n/a	n/a	0.3670
E(HL)	!CLKN&!TE	0.0100	n/a	n/a	0.0481
E(HL)	!CLKN&TE	0.0100	n/a	n/a	0.0192
E(HL)	CLKN&!TE	0.0100	n/a	n/a	0.6157
E(HL)	CLKN&TE	0.0100	n/a	n/a	0.0228
TE(LH)	!CLKN&!E	0.0100	n/a	n/a	-0.0393
TE(LH)	CLKN&!E	0.0100	n/a	n/a	0.4334
TE(LH)	CLKN&E	0.0100	n/a	n/a	-0.0387
TE(LH)	!CLKN&E	0.0100	n/a	n/a	-0.0424

LEAKAGE POWER

When Condition	Power (nW)
!CLKN&!E&!TE	0.5079
!CLKN&!E&TE	0.4615
!CLKN&E&!TE	0.4343
!CLKN&E&TE	0.4343
CLKN&!E&!TE	0.3428
CLKN&!E&TE	0.3561
CLKN&E&!TE	0.3207
CLKN&E&TE	0.3207

gf180mcu_fd_sc_mcu9t5v0__icgtn_4

gf180mcu_fd_sc_mcu9t5v0__icgtn_4 symbol

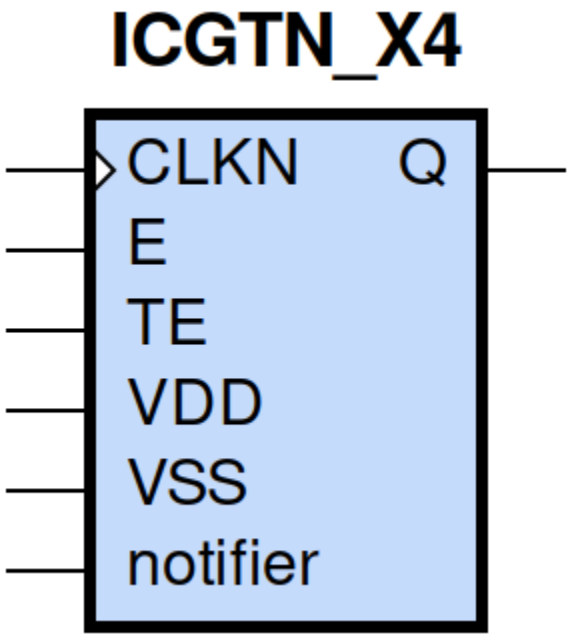

gf180mcu_fd_sc_mcu9t5v0__icgtn_4 schematic

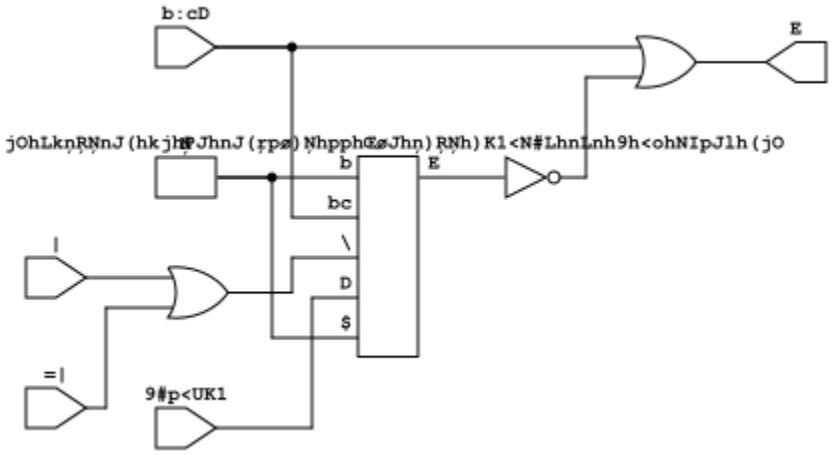

gf180mcu_fd_sc_mcu9t5v0__icgtn_4 layout

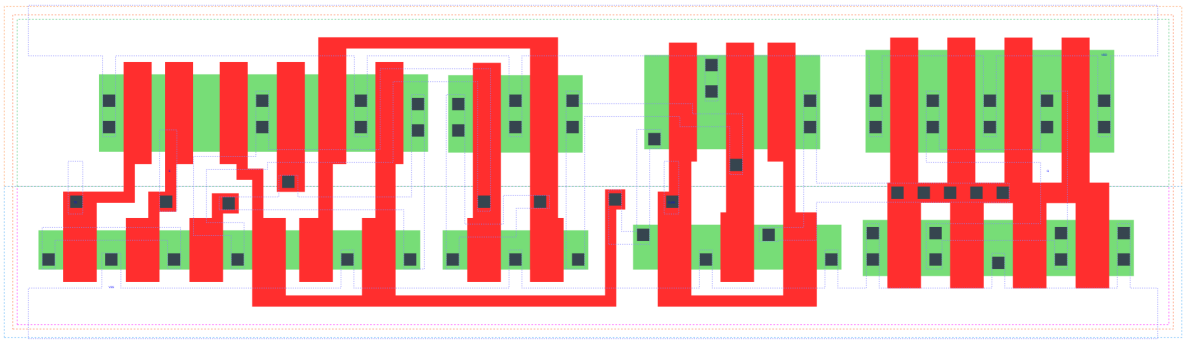

ICGTN_X4 is a negative-edge triggered clock-gating latch with 4X drive strength

Attributes

Attribute	Value
area	true μm^2
area	latch_negedge_precontrol μm^2
area	true μm^2
area	true μm^2
area	true μm^2
area	101.606400 μm^2

TRUTH TABLE

TE	E	CLKN	QDN(n+1)	Q(n+1)
L	L	H	H	H
L	H	H	L	H
H	L	H	L	H
H	H	H	L	H
X	X	L	QDN(n)	QDN(n)

FUNCTIONAL SCHEMATIC

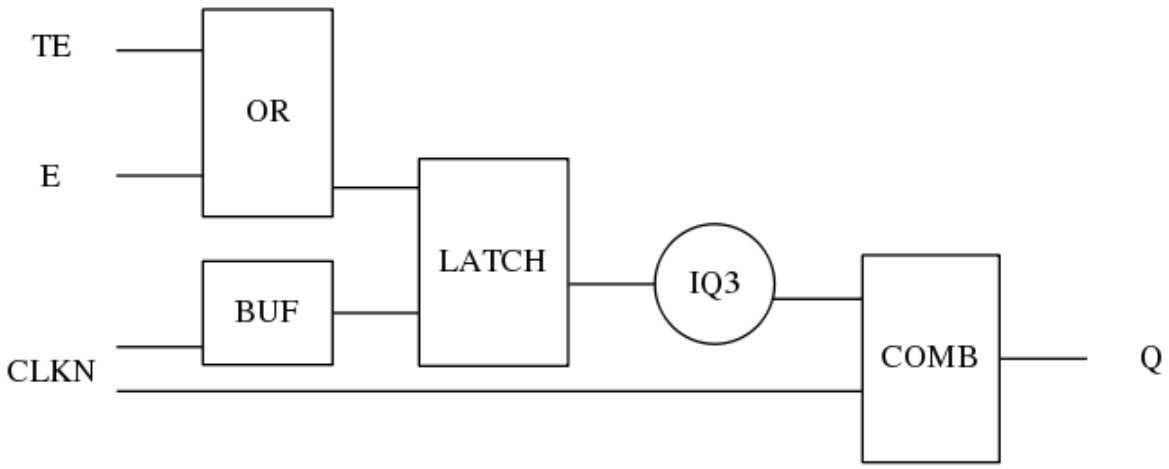

CONSTRAINTS

Constraint Pin	Related Pin	setup(ns)	hold(ns)
TE(LH)	CLKN(HL)	0.5100	-0.0860
TE(HL)	CLKN(HL)	0.4240	-0.4060
E(LH)	CLKN(HL)	0.4810	-0.0740
E(HL)	CLKN(HL)	0.4010	-0.3890

Constraint Pin	Related Pin	Minimum Pulse Width(ns)
CLKN(LHL)	CLKN(LH)	0.4170
CLKN(LHL)	CLKN(LH)	0.6750
CLKN(LHL)	CLKN(LH)	0.6500
CLKN(LHL)	CLKN(LH)	0.6140

PIN CAPACITANCE (pf)

Pin	Type	Capacitance (pf)
TE	input	0.0047
E	input	0.0047
CLKN	input	0.0113

DELAY AND OUTPUT TRANSITION TIME corresponding to min slew and load

Input Pin	Output	When Condition	Tin (ns)	Out Load (pf)	Delay (ns)	Tout (ns)
CLKN(HL)	Q(HL)	!E&TE	0.0100	0.0010	0.3518	0.0573
CLKN(HL)	Q(HL)	E&!TE	0.0100	0.0010	0.3518	0.0573
CLKN(HL)	Q(HL)	E&TE	0.0100	0.0010	0.3518	0.0571
CLKN(LH)	Q(LH)	!E&!TE	0.0100	0.0010	0.2249	0.0358
CLKN(LH)	Q(LH)	!E&TE	0.0100	0.0010	0.2250	0.0356
CLKN(LH)	Q(LH)	E&!TE	0.0100	0.0010	0.2250	0.0356
CLKN(LH)	Q(LH)	E&TE	0.0100	0.0010	0.2250	0.0356

DYNAMIC ENERGY

Input Pin	When Condition	Tin (ns)	Output	Out Load (pf)	Energy (uW/MHz)
CLKN	!E&TE	0.0100	Q(HL)	0.0010	1.4112
CLKN	E&!TE	0.0100	Q(HL)	0.0010	1.4102
CLKN	E&TE	0.0100	Q(HL)	0.0010	1.4102
CLKN	!E&!TE	0.0100	Q(LH)	0.0010	1.3700
CLKN	!E&TE	0.0100	Q(LH)	0.0010	0.8257
CLKN	E&!TE	0.0100	Q(LH)	0.0010	0.8261
CLKN	E&TE	0.0100	Q(LH)	0.0010	0.8262
E(LH)	!CLKN&!TE	0.0100	n/a	n/a	-0.0438
E(LH)	!CLKN&TE	0.0100	n/a	n/a	-0.0177
E(LH)	CLKN&!TE	0.0100	n/a	n/a	0.4138
E(LH)	CLKN&TE	0.0100	n/a	n/a	-0.0130
CLKN(LH)	!E&!TE	0.0100	n/a	n/a	0.1830
CLKN(LH)	!E&TE	0.0100	n/a	n/a	0.6562
CLKN(LH)	E&!TE	0.0100	n/a	n/a	0.6305
CLKN(LH)	E&TE	0.0100	n/a	n/a	0.6247
TE(HL)	!CLKN&!E	0.0100	n/a	n/a	0.0797
TE(HL)	CLKN&!E	0.0100	n/a	n/a	0.6456
TE(HL)	CLKN&E	0.0100	n/a	n/a	0.0446
TE(HL)	!CLKN&E	0.0100	n/a	n/a	0.0446
CLKN(HL)	!E&!TE	0.0100	n/a	n/a	0.3663
E(HL)	!CLKN&!TE	0.0100	n/a	n/a	0.0484
E(HL)	!CLKN&TE	0.0100	n/a	n/a	0.0190
E(HL)	CLKN&!TE	0.0100	n/a	n/a	0.6134
E(HL)	CLKN&TE	0.0100	n/a	n/a	0.0226
TE(LH)	!CLKN&!E	0.0100	n/a	n/a	-0.0392
TE(LH)	CLKN&!E	0.0100	n/a	n/a	0.4374
TE(LH)	CLKN&E	0.0100	n/a	n/a	-0.0389
TE(LH)	!CLKN&E	0.0100	n/a	n/a	-0.0425

LEAKAGE POWER

When Condition	Power (nW)
!CLKN&!E&!TE	0.5589
!CLKN&!E&TE	0.5142
!CLKN&E&!TE	0.4879
!CLKN&E&TE	0.4879
CLKN&!E&!TE	0.3938
CLKN&!E&TE	0.4070
CLKN&E&!TE	0.3717
CLKN&E&TE	0.3717

gf180mcu_fd_sc_mcu9t5v0__icgtp_1

gf180mcu_fd_sc_mcu9t5v0__icgtp_1 symbol

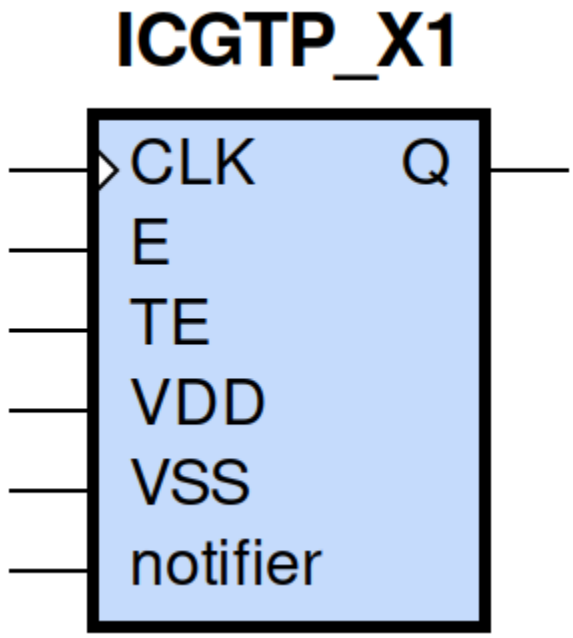

gf180mcu_fd_sc_mcu9t5v0__icgtp_1 schematic

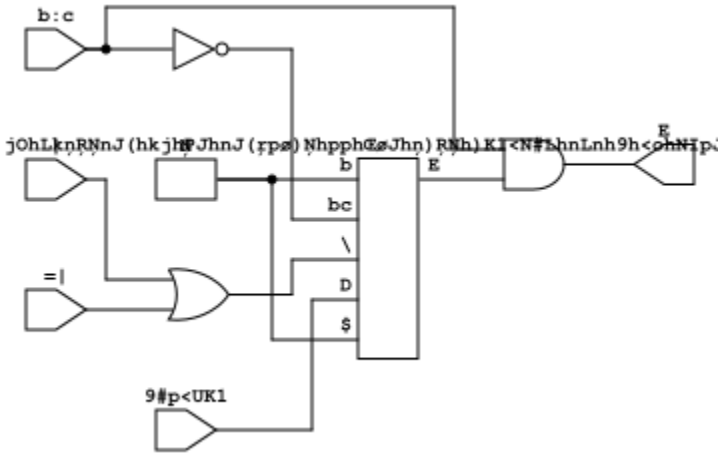

gf180mcu_fd_sc_mcu9t5v0__icgtp_1 layout

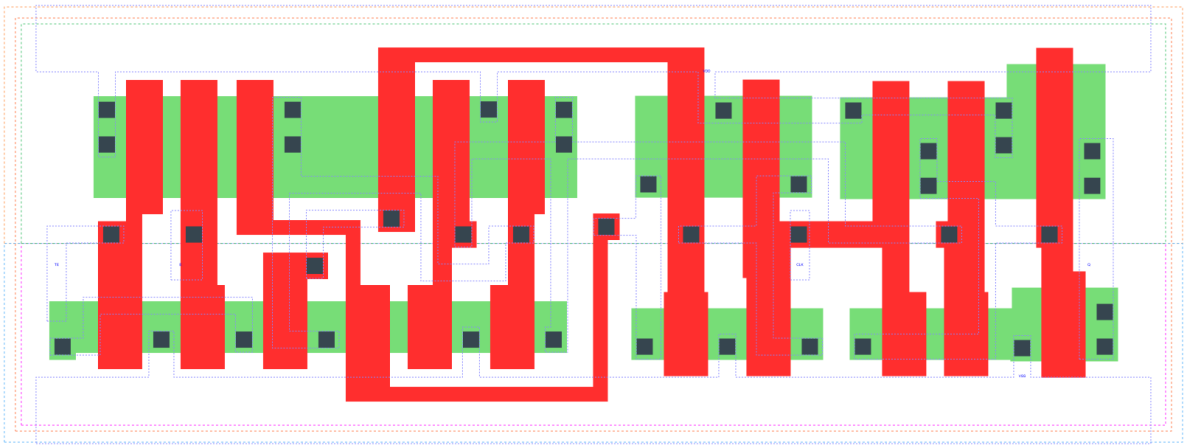

ICGTP_X1 is a positive-edge triggered clock-gating latch with 1X drive strength

Attributes

Attribute	Value
area	76.204800 μm^2
area	true μm^2
area	true μm^2
area	true μm^2
area	true μm^2
area	latch_posedge_precontrol μm^2

TRUTH TABLE

TE	E	CLK	QD(n+1)	Q(n+1)
L	L	L	L	L
L	H	L	H	L
H	L	L	H	L
H	H	L	H	L
X	X	H	QD(n)	QD(n)

FUNCTIONAL SCHEMATIC

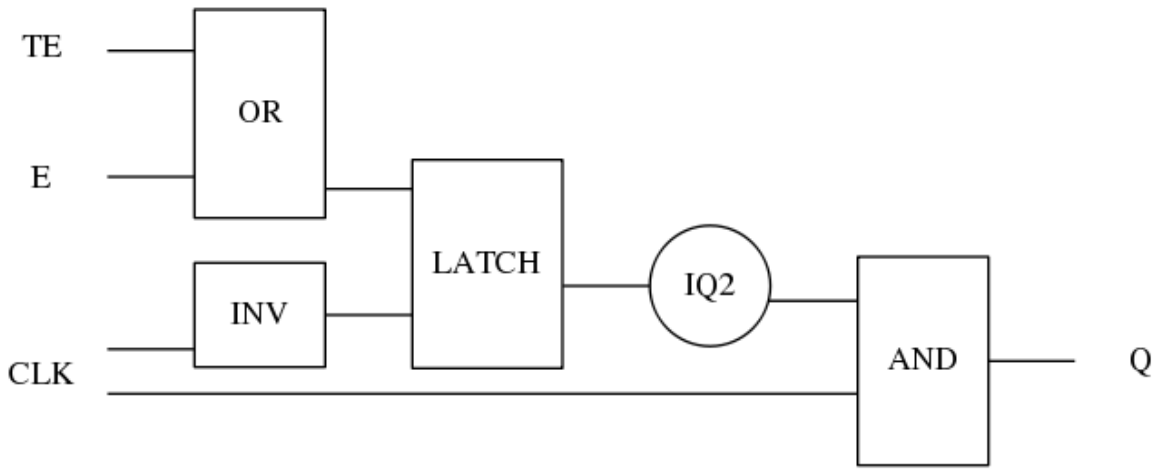

CONSTRAINTS

Constraint Pin	Related Pin	setup(ns)	hold(ns)
TE(HL)	CLK(LH)	0.3090	-0.2460
TE(LH)	CLK(LH)	0.4580	-0.2060
E(HL)	CLK(LH)	0.2920	-0.2290
E(LH)	CLK(LH)	0.4240	-0.1770

Constraint Pin	Related Pin	Minimum Pulse Width(ns)
CLK(HLH)	CLK(HL)	0.4460
CLK(HLH)	CLK(HL)	0.5530
CLK(HLH)	CLK(HL)	0.5100
CLK(HLH)	CLK(HL)	0.4850

PIN CAPACITANCE (pf)

Pin	Type	Capacitance (pf)
TE	input	0.0048
E	input	0.0046
CLK	input	0.0097

DELAY AND OUTPUT TRANSITION TIME corresponding to min slew and load

Input Pin	Output	When Condition	Tin (ns)	Out Load (pf)	Delay (ns)	Tout (ns)
CLK(LH)	Q(LH)	!E&TE	0.0100	0.0010	0.1815	0.0381
CLK(LH)	Q(LH)	E&!TE	0.0100	0.0010	0.1815	0.0381
CLK(LH)	Q(LH)	E&TE	0.0100	0.0010	0.1815	0.0381
CLK(HL)	Q(HL)	!E&!TE	0.0100	0.0010	0.1387	0.0292
CLK(HL)	Q(HL)	!E&TE	0.0100	0.0010	0.1387	0.0293
CLK(HL)	Q(HL)	E&!TE	0.0100	0.0010	0.1387	0.0293
CLK(HL)	Q(HL)	E&TE	0.0100	0.0010	0.1387	0.0293

DYNAMIC ENERGY

Input Pin	When Condition	Tin (ns)	Output	Out Load (pf)	Energy (uW/MHz)
CLK	!E&TE	0.0100	Q(LH)	0.0010	0.3652
CLK	E&!TE	0.0100	Q(LH)	0.0010	0.3641
CLK	E&TE	0.0100	Q(LH)	0.0010	0.3641
CLK	!E&!TE	0.0100	Q(HL)	0.0010	0.9582
CLK	!E&TE	0.0100	Q(HL)	0.0010	0.5531
CLK	E&!TE	0.0100	Q(HL)	0.0010	0.5536
CLK	E&TE	0.0100	Q(HL)	0.0010	0.5537
E(LH)	!CLK&!TE	0.0100	n/a	n/a	0.3293
E(LH)	!CLK&TE	0.0100	n/a	n/a	-0.0128
E(LH)	CLK&!TE	0.0100	n/a	n/a	-0.0439
E(LH)	CLK&TE	0.0100	n/a	n/a	-0.0177
CLK(LH)	!E&!TE	0.0100	n/a	n/a	0.1778
TE(HL)	!CLK&!E	0.0100	n/a	n/a	0.4895
TE(HL)	!CLK&E	0.0100	n/a	n/a	0.0445
TE(HL)	CLK&!E	0.0100	n/a	n/a	0.0787
TE(HL)	CLK&E	0.0100	n/a	n/a	0.0446
TE(LH)	!CLK&!E	0.0100	n/a	n/a	0.3523
TE(LH)	!CLK&E	0.0100	n/a	n/a	-0.0386
TE(LH)	CLK&!E	0.0100	n/a	n/a	-0.0392
TE(LH)	CLK&E	0.0100	n/a	n/a	-0.0424
E(HL)	!CLK&!TE	0.0100	n/a	n/a	0.4573
E(HL)	!CLK&TE	0.0100	n/a	n/a	0.0229
E(HL)	CLK&!TE	0.0100	n/a	n/a	0.0476
E(HL)	CLK&TE	0.0100	n/a	n/a	0.0194
CLK(HL)	!E&!TE	0.0100	n/a	n/a	0.3649
CLK(HL)	!E&TE	0.0100	n/a	n/a	0.7399
CLK(HL)	E&!TE	0.0100	n/a	n/a	0.7078
CLK(HL)	E&TE	0.0100	n/a	n/a	0.7049

LEAKAGE POWER

When Condition	Power (nW)
!CLK&!E&!TE	0.2913
!CLK&!E&TE	0.3038
!CLK&E&!TE	0.2685
!CLK&E&TE	0.2685
CLK&!E&!TE	0.4299
CLK&!E&TE	0.4093
CLK&E&!TE	0.3814
CLK&E&TE	0.3814

gf180mcu_fd_sc_mcu9t5v0__icgtp_2

gf180mcu_fd_sc_mcu9t5v0__icgtp_2 symbol

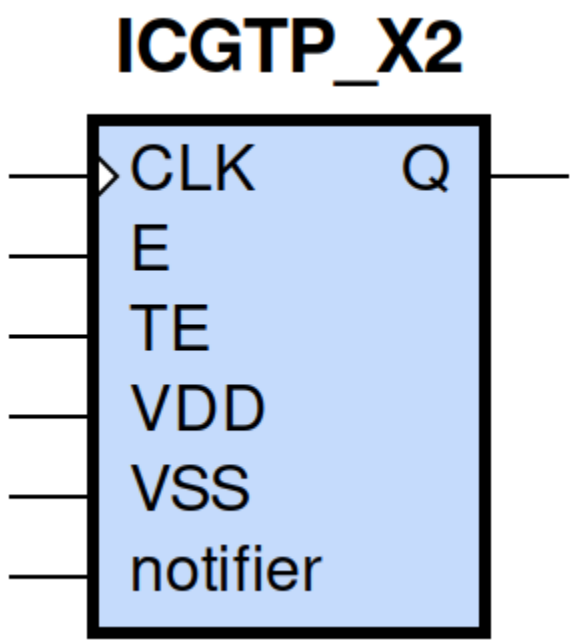

gf180mcu_fd_sc_mcu9t5v0__icgtp_2 schematic

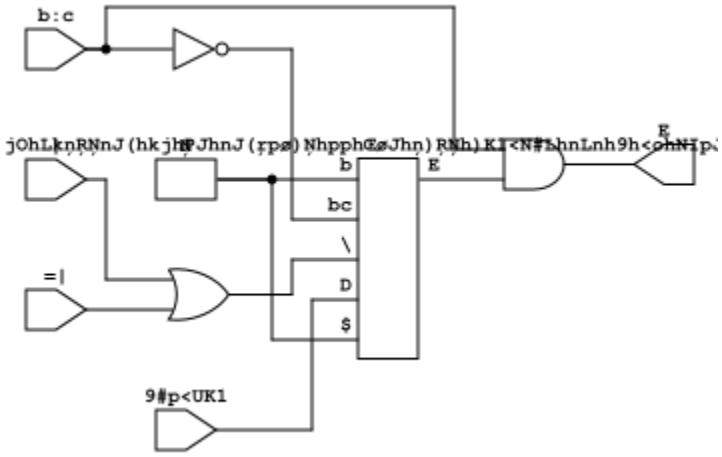

gf180mcu_fd_sc_mcu9t5v0__icgtp_2 layout

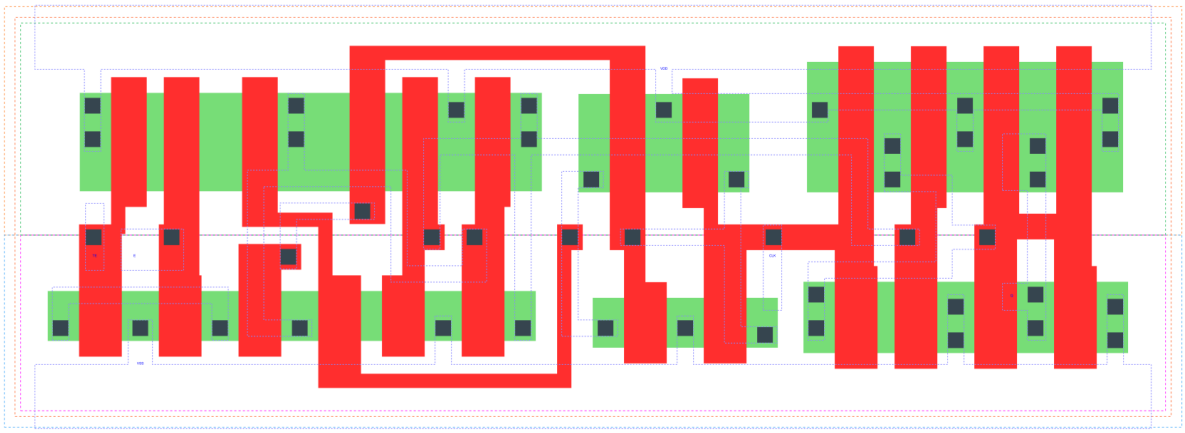

ICGTP_X2 is a positive-edge triggered clock-gating latch with 2X drive strength

Attributes

Attribute	Value
area	true μm^2
area	true μm^2
area	true μm^2
area	79.027200 μm^2
area	true μm^2
area	latch_posedge_precontrol μm^2

TRUTH TABLE

TE	E	CLK	QD(n+1)	Q(n+1)
L	L	L	L	L
L	H	L	H	L
H	L	L	H	L
H	H	L	H	L
X	X	H	QD(n)	QD(n)

FUNCTIONAL SCHEMATIC

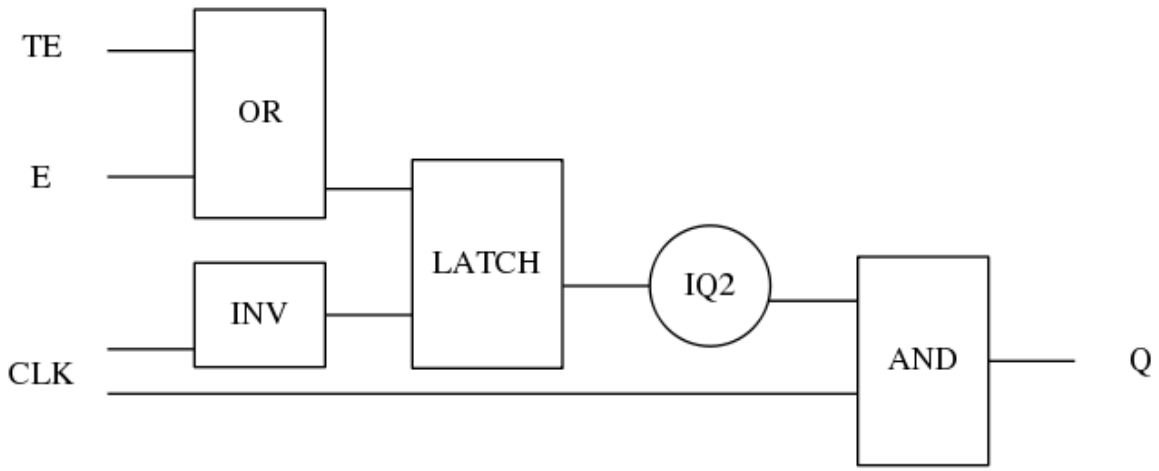

CONSTRAINTS

Constraint Pin	Related Pin	setup(ns)	hold(ns)
TE(HL)	CLK(LH)	0.3260	-0.2460
TE(LH)	CLK(LH)	0.4870	-0.2060
E(HL)	CLK(LH)	0.3090	-0.2230
E(LH)	CLK(LH)	0.4580	-0.1770

Constraint Pin	Related Pin	Minimum Pulse Width(ns)
CLK(HLH)	CLK(HL)	0.4370
CLK(HLH)	CLK(HL)	0.5830
CLK(HLH)	CLK(HL)	0.5530
CLK(HLH)	CLK(HL)	0.5160

PIN CAPACITANCE (pf)

Pin	Type	Capacitance (pf)
TE	input	0.0047
E	input	0.0047
CLK	input	0.0112

DELAY AND OUTPUT TRANSITION TIME corresponding to min slew and load

Input Pin	Output	When Condition	Tin (ns)	Out Load (pf)	Delay (ns)	Tout (ns)
CLK(LH)	Q(LH)	!E&TE	0.0100	0.0010	0.1874	0.0323
CLK(LH)	Q(LH)	E&!TE	0.0100	0.0010	0.1874	0.0323
CLK(LH)	Q(LH)	E&TE	0.0100	0.0010	0.1874	0.0323
CLK(HL)	Q(HL)	!E&!TE	0.0100	0.0010	0.1461	0.0255
CLK(HL)	Q(HL)	!E&TE	0.0100	0.0010	0.1461	0.0255
CLK(HL)	Q(HL)	E&!TE	0.0100	0.0010	0.1461	0.0255
CLK(HL)	Q(HL)	E&TE	0.0100	0.0010	0.1461	0.0256

DYNAMIC ENERGY

Input Pin	When Condition	Tin (ns)	Output	Out Load (pf)	Energy (uW/MHz)
CLK	!E&TE	0.0100	Q(LH)	0.0010	0.5006
CLK	E&!TE	0.0100	Q(LH)	0.0010	0.4996
CLK	E&TE	0.0100	Q(LH)	0.0010	0.4997
CLK	!E&!TE	0.0100	Q(HL)	0.0010	1.1195
CLK	!E&TE	0.0100	Q(HL)	0.0010	0.7086
CLK	E&!TE	0.0100	Q(HL)	0.0010	0.7092
CLK	E&TE	0.0100	Q(HL)	0.0010	0.7090
E(LH)	!CLK&!TE	0.0100	n/a	n/a	0.3414
E(LH)	!CLK&TE	0.0100	n/a	n/a	-0.0131
E(LH)	CLK&!TE	0.0100	n/a	n/a	-0.0439
E(LH)	CLK&TE	0.0100	n/a	n/a	-0.0176
CLK(LH)	!E&!TE	0.0100	n/a	n/a	0.1629
TE(HL)	!CLK&!E	0.0100	n/a	n/a	0.4953
TE(HL)	!CLK&E	0.0100	n/a	n/a	0.0445
TE(HL)	CLK&!E	0.0100	n/a	n/a	0.0795
TE(HL)	CLK&E	0.0100	n/a	n/a	0.0446
TE(LH)	!CLK&!E	0.0100	n/a	n/a	0.3638
TE(LH)	!CLK&E	0.0100	n/a	n/a	-0.0389
TE(LH)	CLK&!E	0.0100	n/a	n/a	-0.0392
TE(LH)	CLK&E	0.0100	n/a	n/a	-0.0425
E(HL)	!CLK&!TE	0.0100	n/a	n/a	0.4633
E(HL)	!CLK&TE	0.0100	n/a	n/a	0.0225
E(HL)	CLK&!TE	0.0100	n/a	n/a	0.0482
E(HL)	CLK&TE	0.0100	n/a	n/a	0.0188
CLK(HL)	!E&!TE	0.0100	n/a	n/a	0.3764
CLK(HL)	!E&TE	0.0100	n/a	n/a	0.7650
CLK(HL)	E&!TE	0.0100	n/a	n/a	0.7331
CLK(HL)	E&TE	0.0100	n/a	n/a	0.7307

LEAKAGE POWER

When Condition	Power (nW)
!CLK&!E&!TE	0.3184
!CLK&!E&TE	0.3307
!CLK&E&!TE	0.2954
!CLK&E&TE	0.2954
CLK&!E&!TE	0.4943
CLK&!E&TE	0.4330
CLK&E&!TE	0.4072
CLK&E&TE	0.4072

gf180mcu_fd_sc_mcu9t5v0__icgtp_4

gf180mcu_fd_sc_mcu9t5v0__icgtp_4 symbol

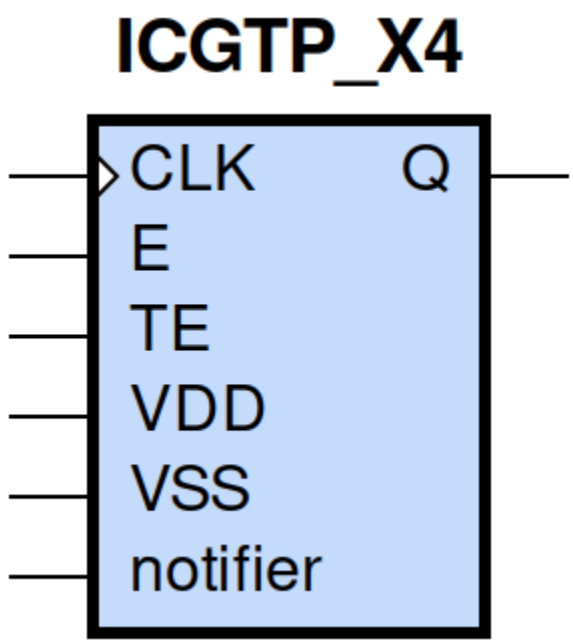

gf180mcu_fd_sc_mcu9t5v0__icgtp_4 schematic

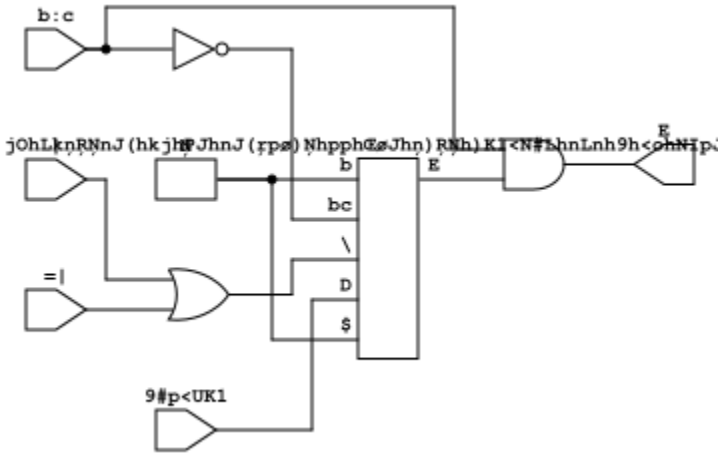

gf180mcu_fd_sc_mcu9t5v0__icgtp_4 layout

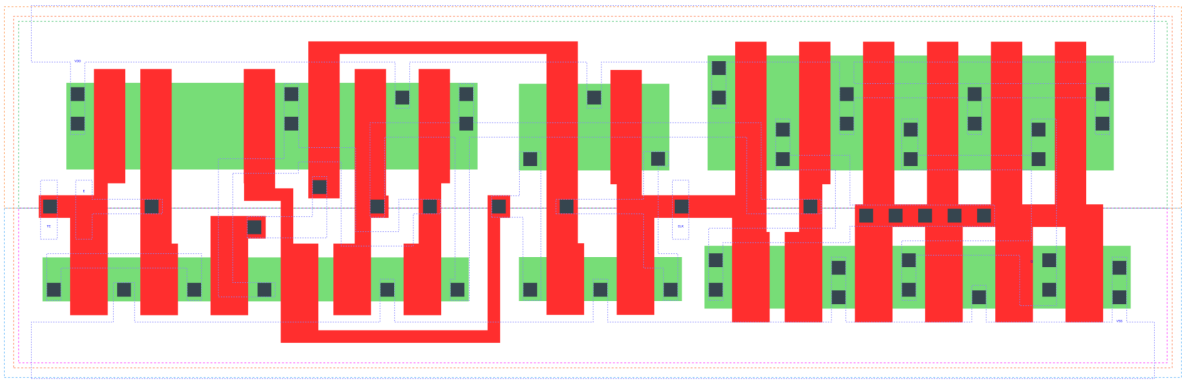

ICGTP_X4 is a positive-edge triggered clock-gating latch with 4X drive strength

Attributes

Attribute	Value
area	true µm^2
area	true µm^2
area	true µm^2
area	latch_posedge_precontrol µm^2
area	90.316800 µm^2
area	true µm^2

TRUTH TABLE

TE	E	CLK	QD(n+1)	Q(n+1)
L	L	L	L	L
L	H	L	H	L
H	L	L	H	L
H	H	L	H	L
X	X	H	QD(n)	QD(n)

FUNCTIONAL SCHEMATIC

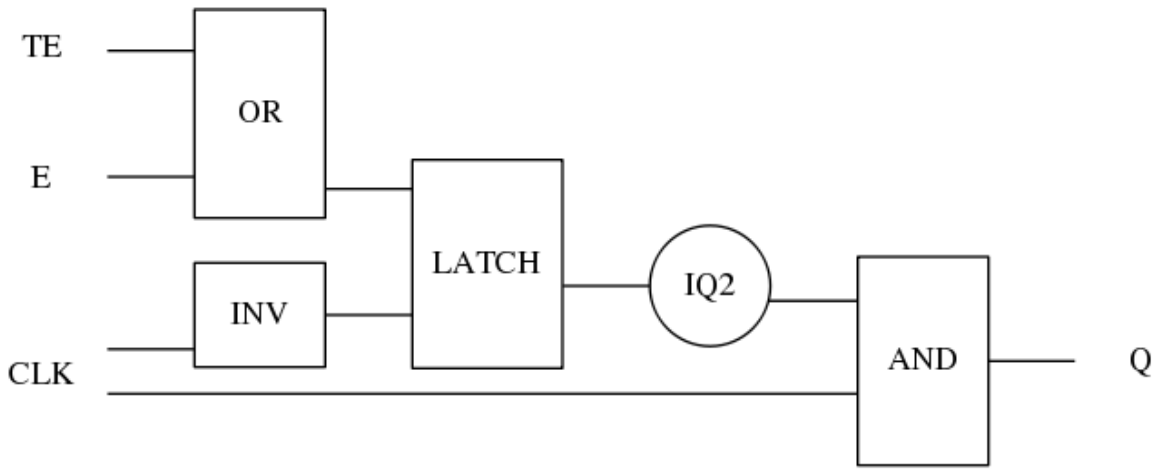

CONSTRAINTS

Constraint Pin	Related Pin	setup(ns)	hold(ns)
TE(HL)	CLK(LH)	0.3030	-0.2060
TE(LH)	CLK(LH)	0.4870	-0.2000
E(HL)	CLK(LH)	0.2860	-0.1830
E(LH)	CLK(LH)	0.4640	-0.1770

Constraint Pin	Related Pin	Minimum Pulse Width(ns)
CLK(HLH)	CLK(HL)	0.4270
CLK(HLH)	CLK(HL)	0.5950
CLK(HLH)	CLK(HL)	0.5530
CLK(HLH)	CLK(HL)	0.5220

PIN CAPACITANCE (pf)

Pin	Type	Capacitance (pf)
TE	input	0.0048
E	input	0.0047
CLK	input	0.0111

DELAY AND OUTPUT TRANSITION TIME corresponding to min slew and load

Input Pin	Output	When Condition	Tin (ns)	Out Load (pf)	Delay (ns)	Tout (ns)
CLK(LH)	Q(LH)	!E&TE	0.0100	0.0010	0.2735	0.0421
CLK(LH)	Q(LH)	E&!TE	0.0100	0.0010	0.2735	0.0421
CLK(LH)	Q(LH)	E&TE	0.0100	0.0010	0.2735	0.0422
CLK(HL)	Q(HL)	!E&!TE	0.0100	0.0010	0.2097	0.0351
CLK(HL)	Q(HL)	!E&TE	0.0100	0.0010	0.2097	0.0350
CLK(HL)	Q(HL)	E&!TE	0.0100	0.0010	0.2097	0.0350
CLK(HL)	Q(HL)	E&TE	0.0100	0.0010	0.2097	0.0350

DYNAMIC ENERGY

Input Pin	When Condition	Tin (ns)	Output	Out Load (pf)	Energy (uW/MHz)
CLK	!E&TE	0.0100	Q(LH)	0.0010	0.9436
CLK	E&!TE	0.0100	Q(LH)	0.0010	0.9428
CLK	E&TE	0.0100	Q(LH)	0.0010	0.9429
CLK	!E&!TE	0.0100	Q(HL)	0.0010	1.5149
CLK	!E&TE	0.0100	Q(HL)	0.0010	1.1068
CLK	E&!TE	0.0100	Q(HL)	0.0010	1.1072
CLK	E&TE	0.0100	Q(HL)	0.0010	1.1073
E(LH)	!CLK&!TE	0.0100	n/a	n/a	0.3343
E(LH)	!CLK&TE	0.0100	n/a	n/a	-0.0137
E(LH)	CLK&!TE	0.0100	n/a	n/a	-0.0437
E(LH)	CLK&TE	0.0100	n/a	n/a	-0.0176
CLK(LH)	!E&!TE	0.0100	n/a	n/a	0.1585
TE(HL)	!CLK&!E	0.0100	n/a	n/a	0.4938
TE(HL)	!CLK&E	0.0100	n/a	n/a	0.0446
TE(HL)	CLK&!E	0.0100	n/a	n/a	0.0809
TE(HL)	CLK&E	0.0100	n/a	n/a	0.0446
TE(LH)	!CLK&!E	0.0100	n/a	n/a	0.3562
TE(LH)	!CLK&E	0.0100	n/a	n/a	-0.0395
TE(LH)	CLK&!E	0.0100	n/a	n/a	-0.0392
TE(LH)	CLK&E	0.0100	n/a	n/a	-0.0426
E(HL)	!CLK&!TE	0.0100	n/a	n/a	0.4615
E(HL)	!CLK&TE	0.0100	n/a	n/a	0.0218
E(HL)	CLK&!TE	0.0100	n/a	n/a	0.0493
E(HL)	CLK&TE	0.0100	n/a	n/a	0.0180
CLK(HL)	!E&!TE	0.0100	n/a	n/a	0.3786
CLK(HL)	!E&TE	0.0100	n/a	n/a	0.7624
CLK(HL)	E&!TE	0.0100	n/a	n/a	0.7304
CLK(HL)	E&TE	0.0100	n/a	n/a	0.7280

LEAKAGE POWER

When Condition	Power (nW)
!CLK&!E&!TE	0.3721
!CLK&!E&TE	0.3845
!CLK&E&!TE	0.3491
!CLK&E&TE	0.3491
CLK&!E&!TE	0.5445
CLK&!E&TE	0.4797
CLK&E&!TE	0.4580
CLK&E&TE	0.4580

gf180mcu_fd_sc_mcu9t5v0__inv_1

gf180mcu_fd_sc_mcu9t5v0__inv_1 symbol

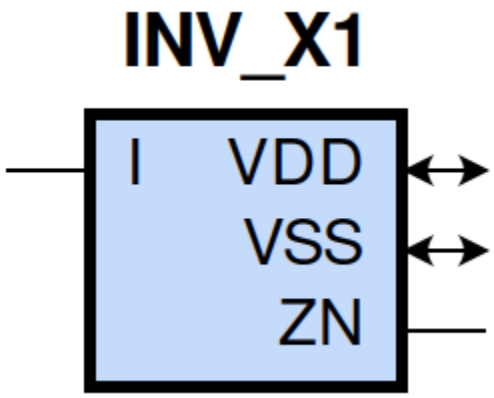

gf180mcu_fd_sc_mcu9t5v0__inv_1 schematic

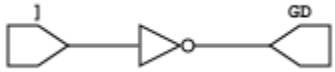

gf180mcu_fd_sc_mcu9t5v0__inv_1 layout

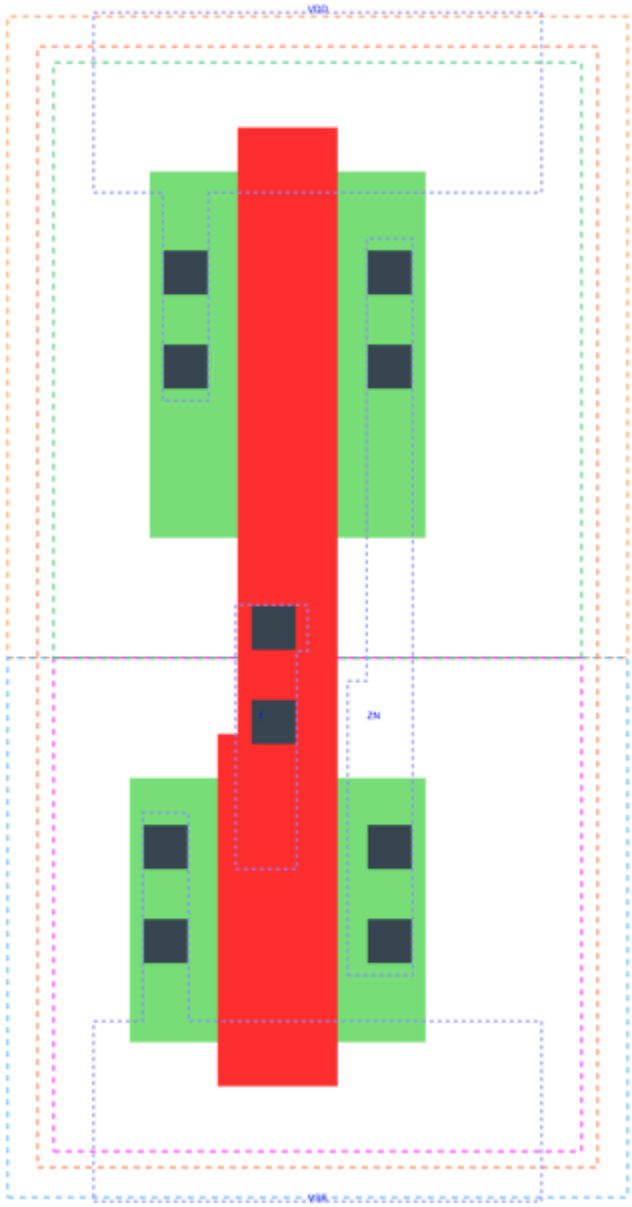

INV_X1 is an inverter with 1X drive strength

Attributes

Attribute	Value
area	11.289600 μm^2

OUTPUT FUNCTIONS

Output Pin	Function
ZN	(!I)

TRUTH TABLE FOR ZN

I	ZN
0	1
1	0

FUNCTIONAL SCHEMATIC

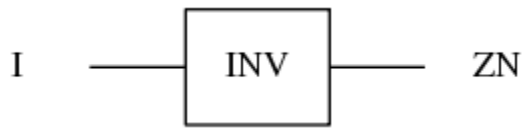

PIN CAPACITANCE (pf)

Pin	Type	Capacitance (pf)
I	input	0.0070

DELAY AND OUTPUT TRANSITION TIME corresponding to min slew and load

Input Pin	Output	When Condition	Tin (ns)	Out Load (pf)	Delay (ns)	Tout (ns)
I(LH)	ZN(HL)	default	0.0100	0.0010	0.0332	0.0155
I(HL)	ZN(LH)	default	0.0100	0.0010	0.0446	0.0280

DYNAMIC ENERGY

Input Pin	When Condition	Tin (ns)	Output	Out Load (pf)	Energy (uW/MHz)
I	default	0.0100	ZN(HL)	0.0010	-0.0054
I	default	0.0100	ZN(LH)	0.0010	0.1368

LEAKAGE POWER

When Condition	Power (nW)
!I	0.0756
I	0.0769

gf180mcu_fd_sc_mcu9t5v0__inv_x12

gf180mcu_fd_sc_mcu9t5v0__inv_x12 symbol

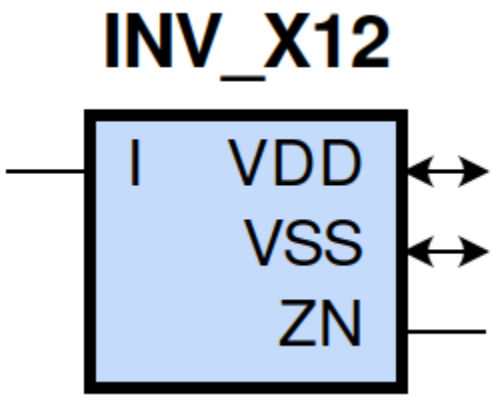

gf180mcu_fd_sc_mcu9t5v0__inv_x12 schematic

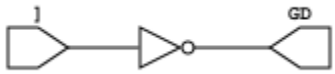

gf180mcu_fd_sc_mcu9t5v0__inv_x12 layout

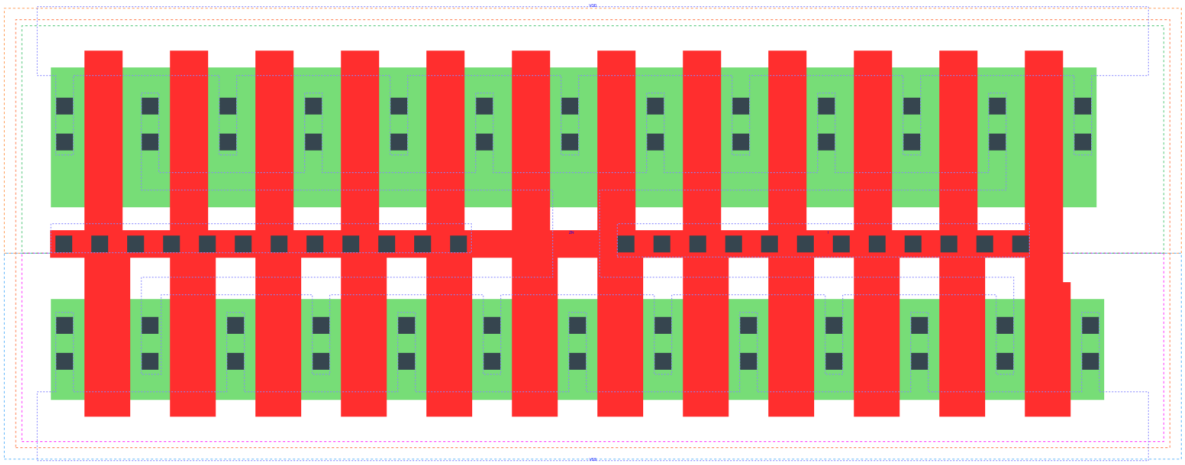

INV_X12 is an inverter with 12X drive strength

Attributes

Attribute	Value
area	73.382400 μm^2

OUTPUT FUNCTIONS

Output Pin	Function
ZN	(!I)

TRUTH TABLE FOR ZN

I	ZN
0	1
1	0

FUNCTIONAL SCHEMATIC

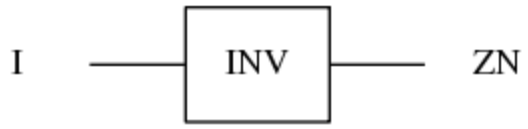

PIN CAPACITANCE (pf)

Pin	Type	Capacitance (pf)
I	input	0.0825

DELAY AND OUTPUT TRANSITION TIME corresponding to min slew and load

Input Pin	Output	When Condition	Tin (ns)	Out Load (pf)	Delay (ns)	Tout (ns)
I(LH)	ZN(HL)	default	0.0100	0.0010	0.0261	0.0094
I(HL)	ZN(LH)	default	0.0100	0.0010	0.0320	0.0174

DYNAMIC ENERGY

Input Pin	When Condition	Tin (ns)	Output	Out Load (pf)	Energy (uW/MHz)
I	default	0.0100	ZN(HL)	0.0010	-0.2123
I	default	0.0100	ZN(LH)	0.0010	1.4199

LEAKAGE POWER

When Condition	Power (nW)
!I	0.3570
I	0.3723

gf180mcu_fd_sc_mcu9t5v0__inv_x16

gf180mcu_fd_sc_mcu9t5v0__inv_x16 symbol

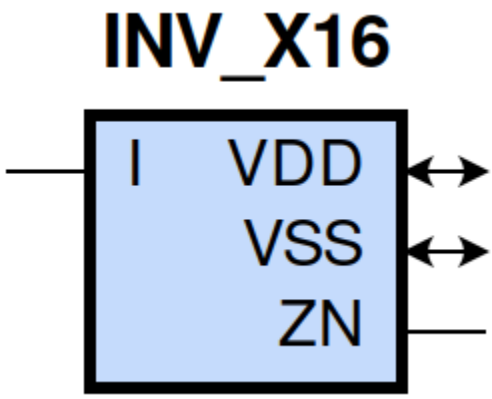

gf180mcu_fd_sc_mcu9t5v0__inv_x16 schematic

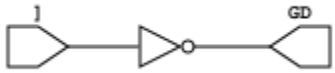

gf180mcu_fd_sc_mcu9t5v0__inv_x16 layout

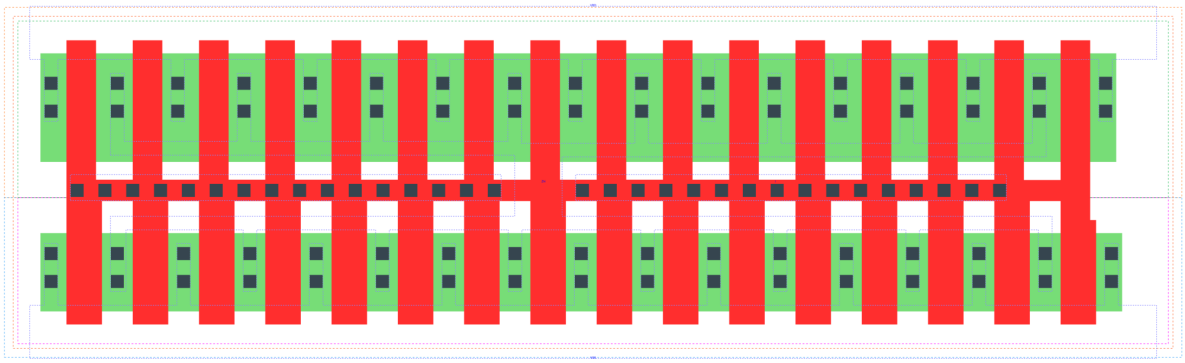

INV_X16 is an inverter with 16X drive strength

Attributes

Attribute	Value
area	95.961600 μm^2

OUTPUT FUNCTIONS

Output Pin	Function
ZN	(!I)

TRUTH TABLE FOR ZN

I	ZN
0	1
1	0

FUNCTIONAL SCHEMATIC

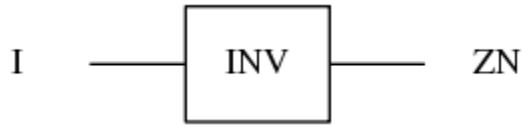

PIN CAPACITANCE (pf)

Pin	Type	Capacitance (pf)
I	input	0.1105

DELAY AND OUTPUT TRANSITION TIME corresponding to min slew and load

Input Pin	Output	When Condition	Tin (ns)	Out Load (pf)	Delay (ns)	Tout (ns)
I(LH)	ZN(HL)	default	0.0100	0.0010	0.0262	0.0095
I(HL)	ZN(LH)	default	0.0100	0.0010	0.0322	0.0174

DYNAMIC ENERGY

Input Pin	When Condition	Tin (ns)	Output	Out Load (pf)	Energy (uW/MHz)
I	default	0.0100	ZN(HL)	0.0010	-0.2840
I	default	0.0100	ZN(LH)	0.0010	1.9088

LEAKAGE POWER

When Condition	Power (nW)
!I	0.4593
I	0.4797

gf180mcu_fd_sc_mcu9t5v0__inv_2

gf180mcu_fd_sc_mcu9t5v0__inv_2 symbol

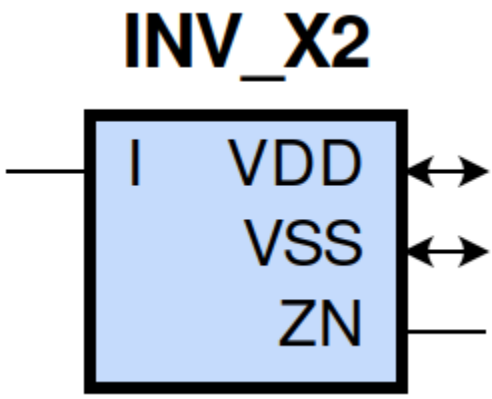

gf180mcu_fd_sc_mcu9t5v0__inv_2 schematic

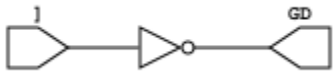

gf180mcu_fd_sc_mcu9t5v0__inv_2 layout

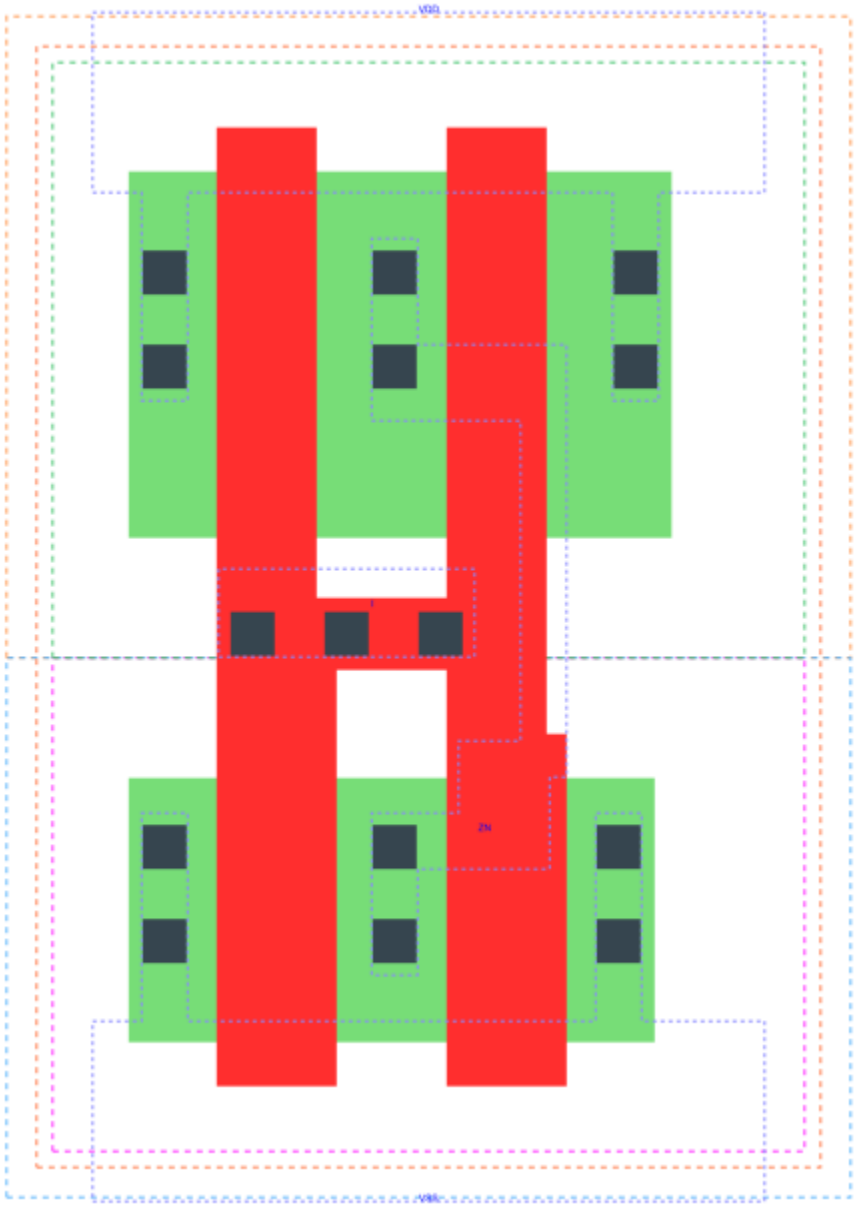

INV_X2 is an inverter with 2X drive strength

Attributes

Attribute	Value
area	16.934400 μm^2

OUTPUT FUNCTIONS

Output Pin	Function
ZN	(!I)

TRUTH TABLE FOR ZN

I	ZN
0	1
1	0

FUNCTIONAL SCHEMATIC

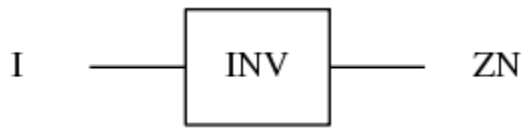

PIN CAPACITANCE (pf)

Pin	Type	Capacitance (pf)
I	input	0.0137

DELAY AND OUTPUT TRANSITION TIME corresponding to min slew and load

Input Pin	Output	When Condition	Tin (ns)	Out Load (pf)	Delay (ns)	Tout (ns)
I(LH)	ZN(HL)	default	0.0100	0.0010	0.0271	0.0107
I(HL)	ZN(LH)	default	0.0100	0.0010	0.0342	0.0196

DYNAMIC ENERGY

Input Pin	When Condition	Tin (ns)	Output	Out Load (pf)	Energy (uW/MHz)
I	default	0.0100	ZN(HL)	0.0010	-0.0336
I	default	0.0100	ZN(LH)	0.0010	0.2371

LEAKAGE POWER

When Condition	Power (nW)
!I	0.1012
I	0.1037

gf180mcu_fd_sc_mcu9t5v0__inv_x20

gf180mcu_fd_sc_mcu9t5v0__inv_x20 symbol

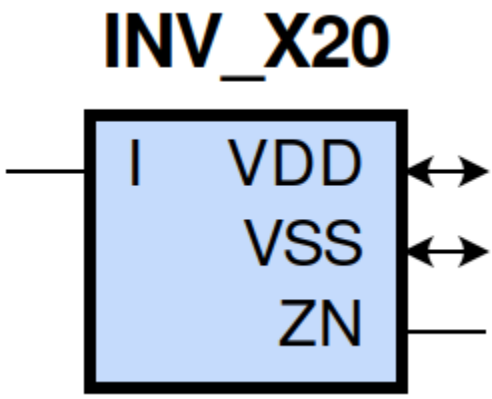

gf180mcu_fd_sc_mcu9t5v0__inv_x20 schematic

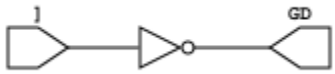

gf180mcu_fd_sc_mcu9t5v0__inv_x20 layout

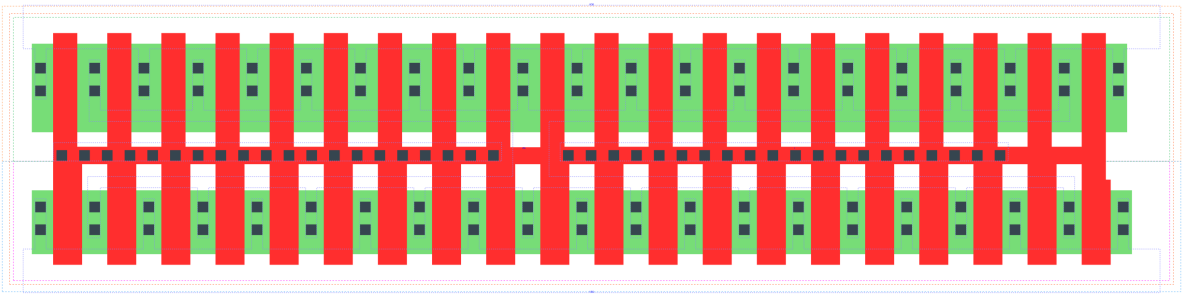

INV_X20 is an inverter with 20X drive strength

Attributes

Attribute	Value
area	118.540800 μm^2

OUTPUT FUNCTIONS

Output Pin	Function
ZN	(!I)

TRUTH TABLE FOR ZN

I	ZN
0	1
1	0

FUNCTIONAL SCHEMATIC

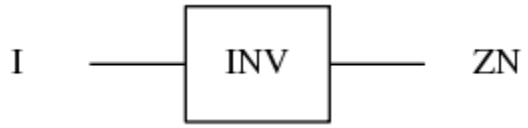

PIN CAPACITANCE (pf)

Pin	Type	Capacitance (pf)
I	input	0.1376

DELAY AND OUTPUT TRANSITION TIME corresponding to min slew and load

Input Pin	Output	When Condition	Tin (ns)	Out Load (pf)	Delay (ns)	Tout (ns)
I(LH)	ZN(HL)	default	0.0100	0.0010	0.0264	0.0094
I(HL)	ZN(LH)	default	0.0100	0.0010	0.0323	0.0173

DYNAMIC ENERGY

Input Pin	When Condition	Tin (ns)	Output	Out Load (pf)	Energy (uW/MHz)
I	default	0.0100	ZN(HL)	0.0010	-0.3558
I	default	0.0100	ZN(LH)	0.0010	2.3703

LEAKAGE POWER

When Condition	Power (nW)
!I	0.5616
I	0.5871

gf180mcu_fd_sc_mcu9t5v0__inv_3

gf180mcu_fd_sc_mcu9t5v0__inv_3 symbol

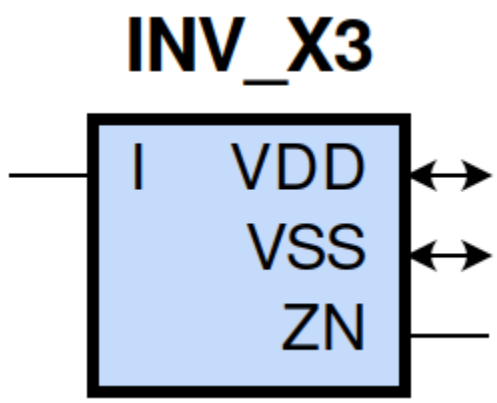

gf180mcu_fd_sc_mcu9t5v0__inv_3 schematic

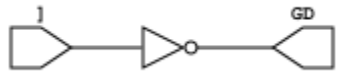

gf180mcu_fd_sc_mcu9t5v0__inv_3 layout

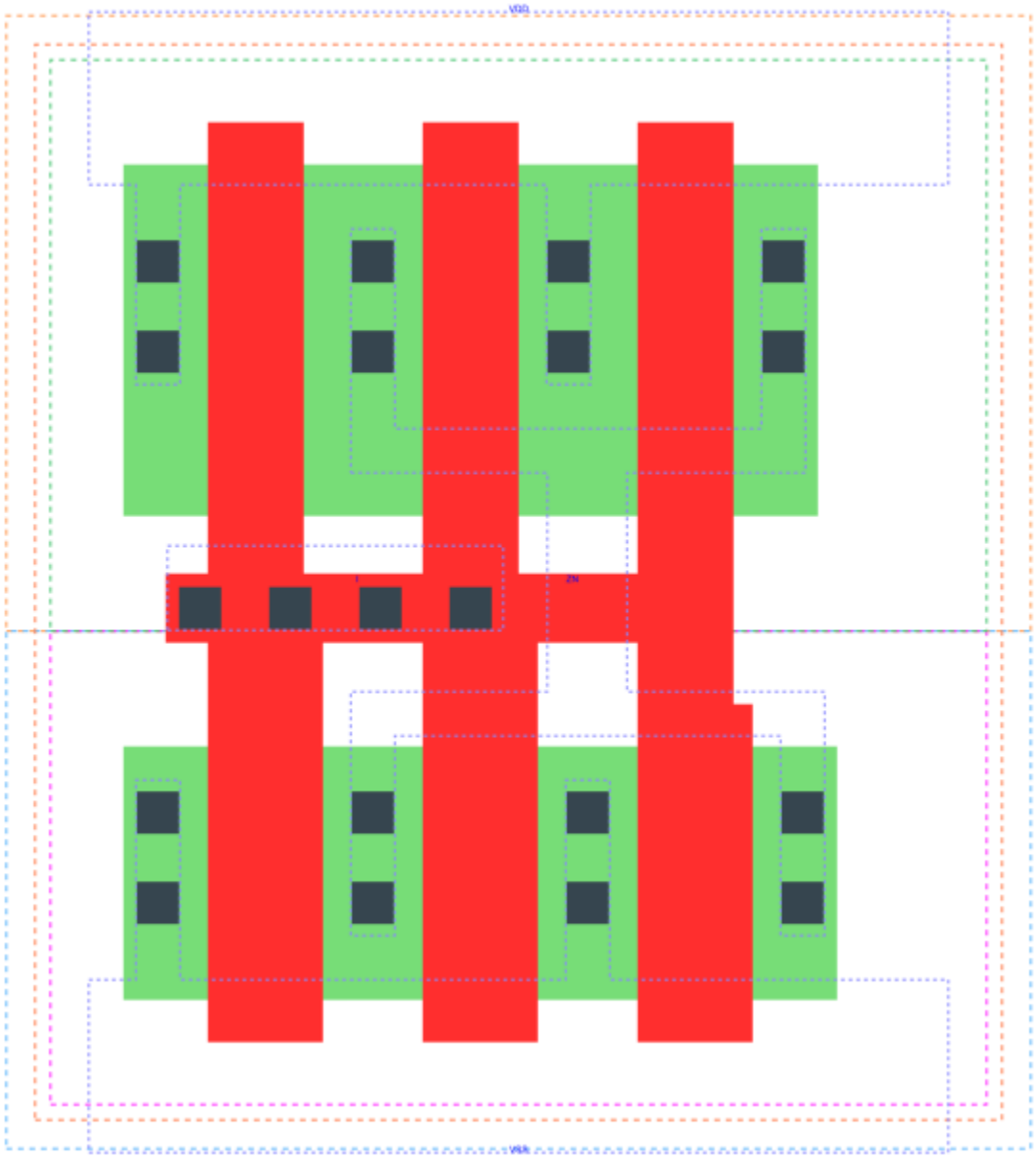

INV_X3 is an inverter with 3X drive strength

Attributes

Attribute	Value
area	22.579200 μm^2

OUTPUT FUNCTIONS

Output Pin	Function
ZN	(!I)

TRUTH TABLE FOR ZN

I	ZN
0	1
1	0

FUNCTIONAL SCHEMATIC

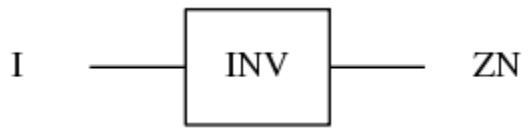

PIN CAPACITANCE (pf)

Pin	Type	Capacitance (pf)
I	input	0.0205

DELAY AND OUTPUT TRANSITION TIME corresponding to min slew and load

Input Pin	Output	When Condition	Tin (ns)	Out Load (pf)	Delay (ns)	Tout (ns)
I(LH)	ZN(HL)	default	0.0100	0.0010	0.0276	0.0111
I(HL)	ZN(LH)	default	0.0100	0.0010	0.0352	0.0203

DYNAMIC ENERGY

Input Pin	When Condition	Tin (ns)	Output	Out Load (pf)	Energy (uW/MHz)
I	default	0.0100	ZN(HL)	0.0010	-0.0411
I	default	0.0100	ZN(LH)	0.0010	0.3693

LEAKAGE POWER

When Condition	Power (nW)
!I	0.1267
I	0.1306

gf180mcu_fd_sc_mcu9t5v0__inv_4

gf180mcu_fd_sc_mcu9t5v0__inv_4 symbol

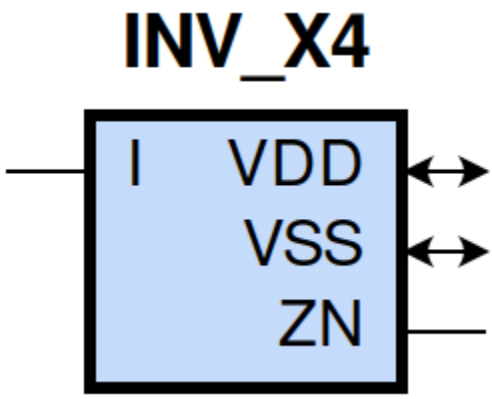

gf180mcu_fd_sc_mcu9t5v0__inv_4 schematic

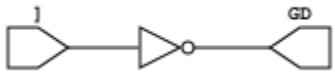

gf180mcu_fd_sc_mcu9t5v0__inv_4 layout

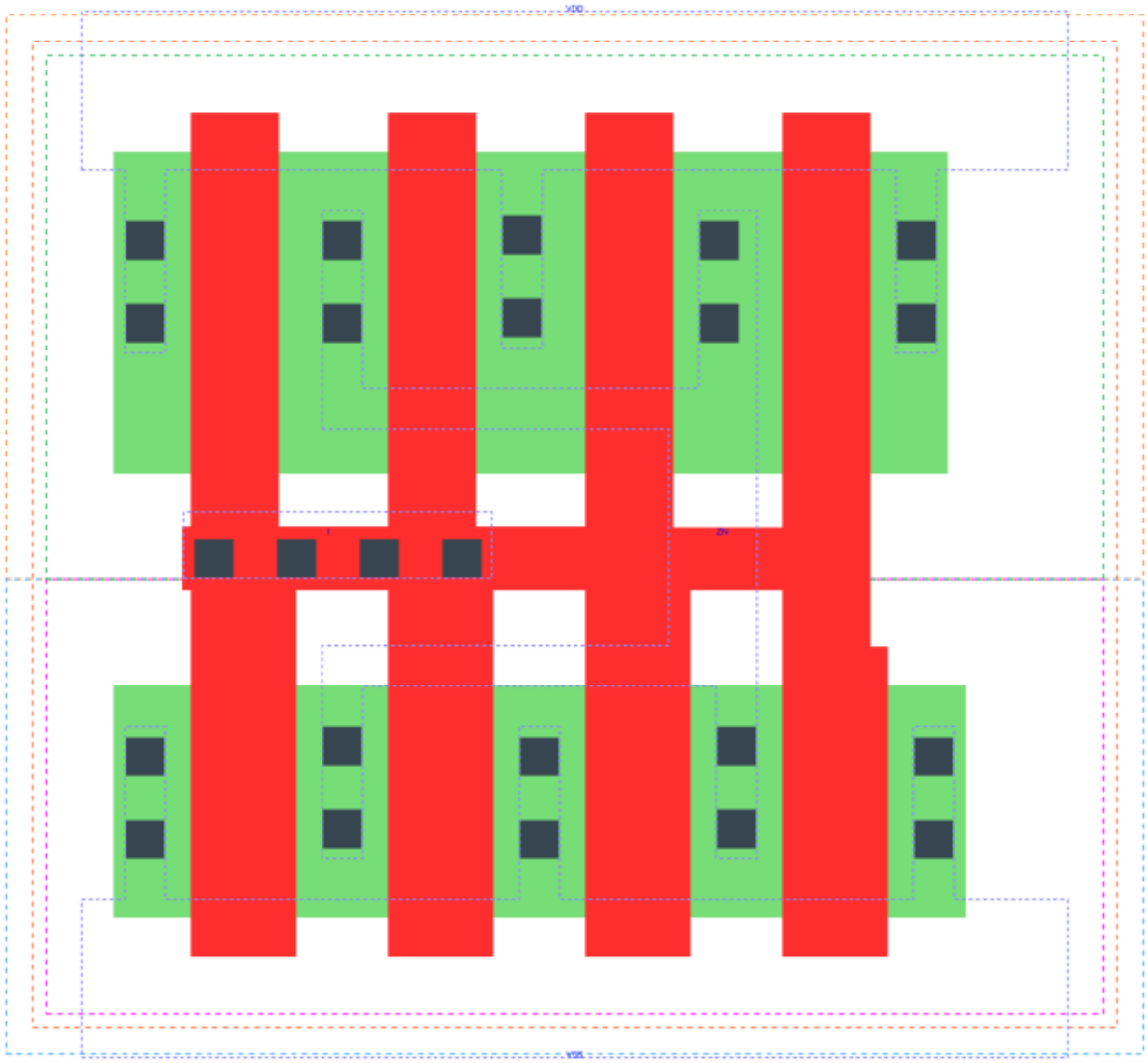

INV_X4 is an inverter with 4X drive strength

Attributes

Attribute	Value
area	28.224000 μm^2

OUTPUT FUNCTIONS

Output Pin	Function
ZN	(!I)

TRUTH TABLE FOR ZN

I	ZN
0	1
1	0

FUNCTIONAL SCHEMATIC

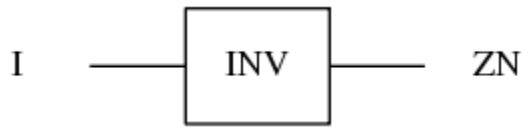

PIN CAPACITANCE (pf)

Pin	Type	Capacitance (pf)
I	input	0.0272

DELAY AND OUTPUT TRANSITION TIME corresponding to min slew and load

Input Pin	Output	When Condition	Tin (ns)	Out Load (pf)	Delay (ns)	Tout (ns)
I(LH)	ZN(HL)	default	0.0100	0.0010	0.0258	0.0096
I(HL)	ZN(LH)	default	0.0100	0.0010	0.0319	0.0177

DYNAMIC ENERGY

Input Pin	When Condition	Tin (ns)	Output	Out Load (pf)	Energy (uW/MHz)
I	default	0.0100	ZN(HL)	0.0010	-0.0706
I	default	0.0100	ZN(LH)	0.0010	0.4634

LEAKAGE POWER

When Condition	Power (nW)
!I	0.1523
I	0.1574

gf180mcu_fd_sc_mcu9t5v0__inv_8

gf180mcu_fd_sc_mcu9t5v0__inv_8 symbol

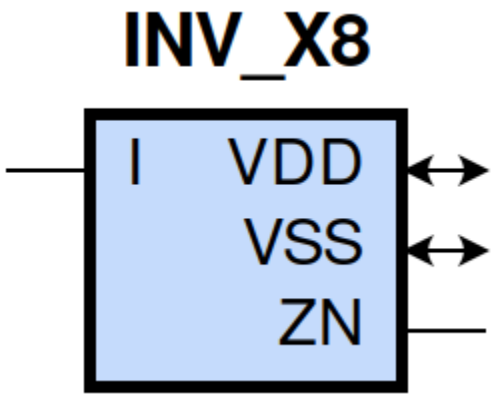

gf180mcu_fd_sc_mcu9t5v0__inv_8 schematic

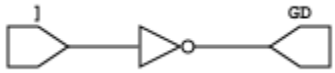

gf180mcu_fd_sc_mcu9t5v0__inv_8 layout

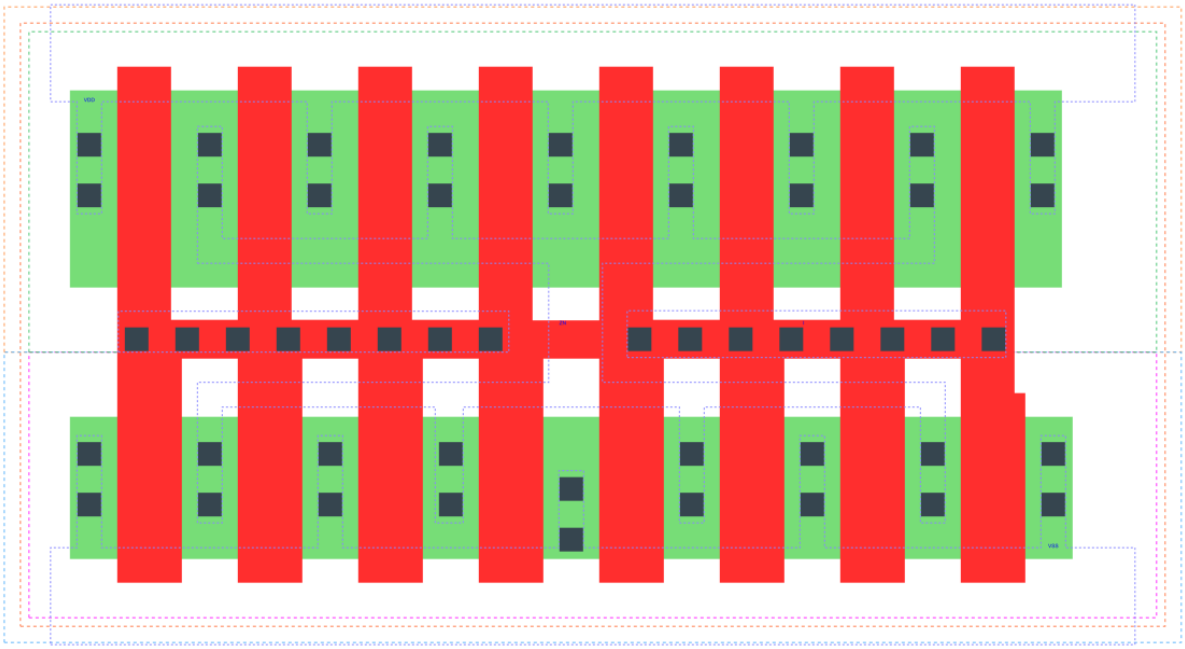

INV_X8 is an inverter with 8X drive strength

Attributes

Attribute	Value
area	50.803200 μm^2

OUTPUT FUNCTIONS

Output Pin	Function
ZN	(!I)

TRUTH TABLE FOR ZN

I	ZN
0	1
1	0

FUNCTIONAL SCHEMATIC

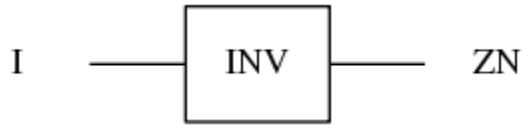

PIN CAPACITANCE (pf)

Pin	Type	Capacitance (pf)
I	input	0.0551

DELAY AND OUTPUT TRANSITION TIME corresponding to min slew and load

Input Pin	Output	When Condition	Tin (ns)	Out Load (pf)	Delay (ns)	Tout (ns)
I(LH)	ZN(HL)	default	0.0100	0.0010	0.0258	0.0094
I(HL)	ZN(LH)	default	0.0100	0.0010	0.0319	0.0175

DYNAMIC ENERGY

Input Pin	When Condition	Tin (ns)	Output	Out Load (pf)	Energy (uW/MHz)
I	default	0.0100	ZN(HL)	0.0010	-0.1414
I	default	0.0100	ZN(LH)	0.0010	0.9445

LEAKAGE POWER

When Condition	Power (nW)
!I	0.2547
I	0.2649

gf180mcu_fd_sc_mcu9t5v0__invz_1

gf180mcu_fd_sc_mcu9t5v0__invz_1 symbol

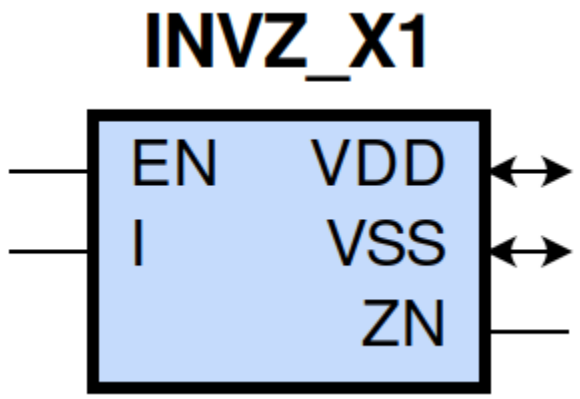

gf180mcu_fd_sc_mcu9t5v0__invz_1 schematic

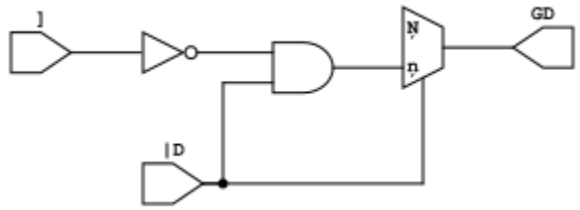

gf180mcu_fd_sc_mcu9t5v0__invz_1 layout

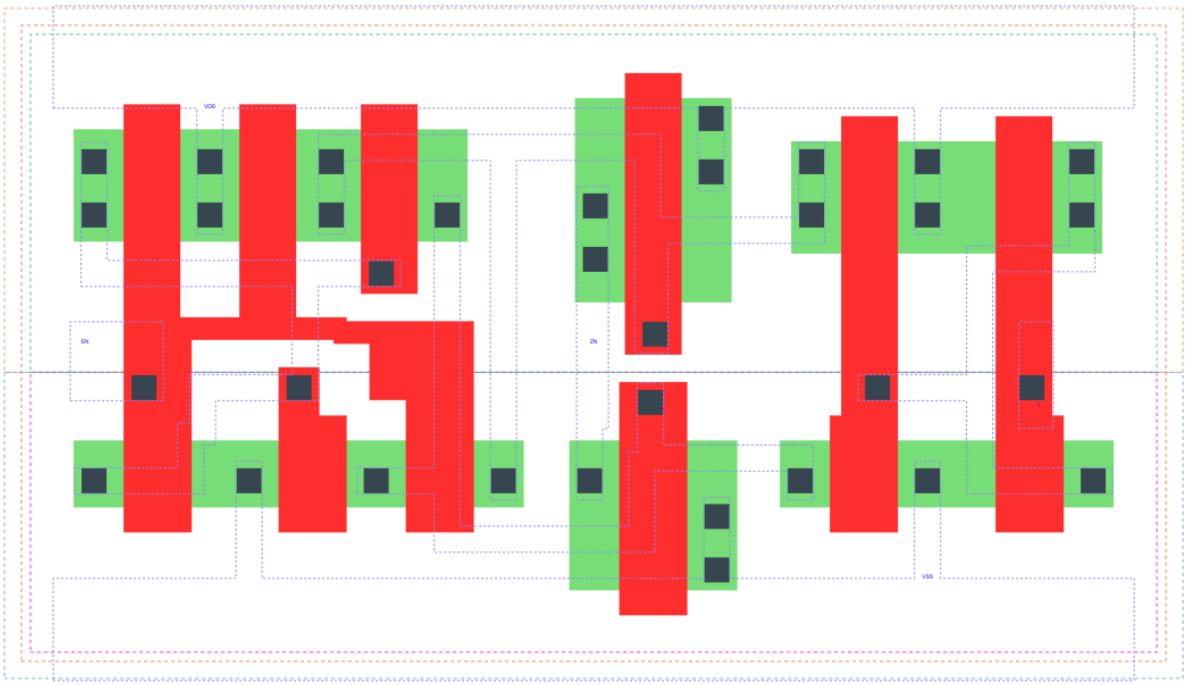

INVZ_X1 is a tri-state inverter with 1X drive strength

Attributes

Attribute	Value
area	47.980800 μm^2

OUTPUT FUNCTIONS

Output Pin	Function
ZN	(!I)

TRUTH TABLE FOR ZN

EN	I	ZN
1	0	1
1	1	0
0	?	z

FUNCTIONAL SCHEMATIC

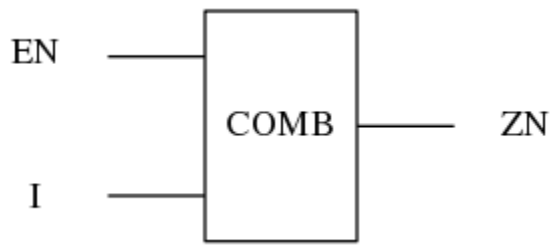

PIN CAPACITANCE (pf)

Pin	Type	Capacitance (pf)
EN	input	0.0080
I	input	0.0039

DELAY AND OUTPUT TRANSITION TIME corresponding to min slew and load

Input Pin	Output	When Condition	Tin (ns)	Out Load (pf)	Delay (ns)	Tout (ns)
EN(LH)	ZN(ZL)	I	0.0100	0.0010	0.1561	0.0408
EN(LH)	ZN(ZH)	!I	0.0100	0.0010	0.1444	0.0434
EN(HL)	ZN(HZ)	!I	0.0100		0.1370	0.0000
EN(HL)	ZN(LZ)	I	0.0100		0.2030	0.0000
I(LH)	ZN(HL)	EN	0.0100	0.0010	0.3255	0.0467
I(HL)	ZN(LH)	EN	0.0100	0.0010	0.3540	0.0454

DYNAMIC ENERGY

Input Pin	When Condition	Tin (ns)	Output	Out Load (pf)	Energy (uW/MHz)
I	EN	0.0100	ZN(HL)	0.0010	0.4185
I	EN	0.0100	ZN(LH)	0.0010	0.3530
EN	I	0.0100	ZN(HL)	0.0010	0.2525
EN(HL)	I	0.0100	n/a	n/a	0.2131
EN(HL)	!I	0.0100	n/a	n/a	0.2933
EN	!I	0.0100	ZN(LH)	0.0010	0.1509
I(LH)	!EN	0.0100	n/a	n/a	0.0315
I(HL)	!EN	0.0100	n/a	n/a	0.1303

LEAKAGE POWER

When Condition	Power (nW)
!EN&!I	0.1658
!EN&I	0.1667
EN&!I	0.2301
EN&I	0.2305

gf180mcu_fd_sc_mcu9t5v0__invz_x12

gf180mcu_fd_sc_mcu9t5v0__invz_x12 symbol

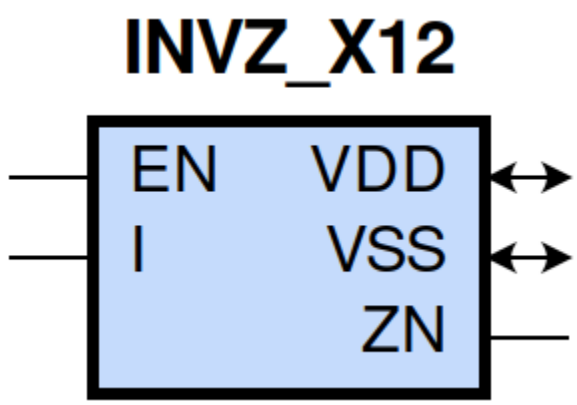

gf180mcu_fd_sc_mcu9t5v0__invz_x12 schematic

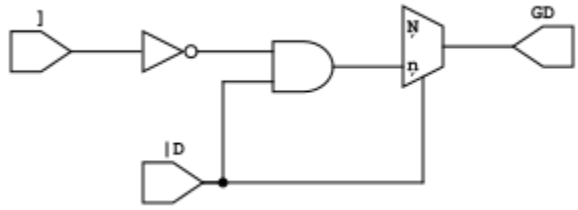

gf180mcu_fd_sc_mcu9t5v0__invz_x12 layout

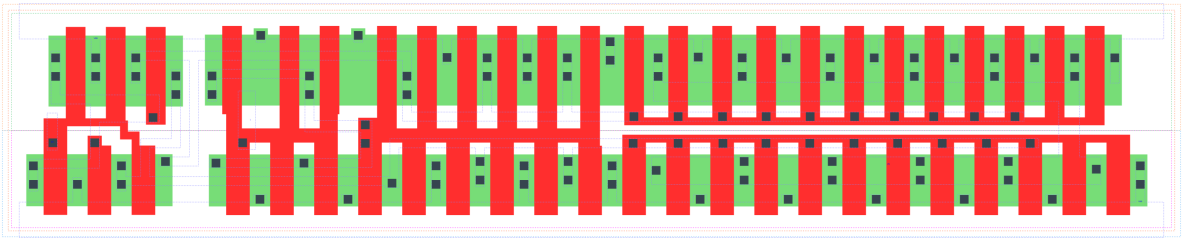

INVZ_X12 is a tri-state inverter with 12X drive strength

Attributes

Attribute	Value
area	146.764800 μm^2

OUTPUT FUNCTIONS

Output Pin	Function
ZN	(!I)

TRUTH TABLE FOR ZN

EN	I	ZN
1	0	1
1	1	0
0	?	z

FUNCTIONAL SCHEMATIC

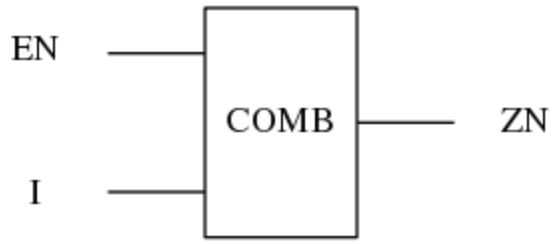

PIN CAPACITANCE (pf)

Pin	Type	Capacitance (pf)
EN	input	0.0137
I	input	0.0200

DELAY AND OUTPUT TRANSITION TIME corresponding to min slew and load

Input Pin	Output	When Condition	Tin (ns)	Out Load (pf)	Delay (ns)	Tout (ns)
EN(LH)	ZN(ZL)	I	0.0100	0.0010	0.1683	0.0407
EN(LH)	ZN(ZH)	!I	0.0100	0.0010	0.1933	0.0476
EN(HL)	ZN(HZ)	!I	0.0100		0.4160	0.0000
EN(HL)	ZN(LZ)	I	0.0100		0.3540	0.0000
I(LH)	ZN(HL)	EN	0.0100	0.0010	0.2899	0.0391
I(HL)	ZN(LH)	EN	0.0100	0.0010	0.3500	0.0456

DYNAMIC ENERGY

Input Pin	When Condition	Tin (ns)	Output	Out Load (pf)	Energy (uW/MHz)
I	EN	0.0100	ZN(HL)	0.0010	2.4881
I	EN	0.0100	ZN(LH)	0.0010	2.5301
EN	I	0.0100	ZN(HL)	0.0010	1.5630
EN(HL)	I	0.0100	n/a	n/a	0.3729
EN(HL)	!I	0.0100	n/a	n/a	0.7103
EN	!I	0.0100	ZN(LH)	0.0010	1.4317
I(LH)	!EN	0.0100	n/a	n/a	0.3178
I(HL)	!EN	0.0100	n/a	n/a	0.8239

LEAKAGE POWER

When Condition	Power (nW)
!EN&!I	0.3615
!EN&I	0.3653
EN&!I	0.6984
EN&I	0.7085

gf180mcu_fd_sc_mcu9t5v0__invz_x16

gf180mcu_fd_sc_mcu9t5v0__invz_x16 symbol

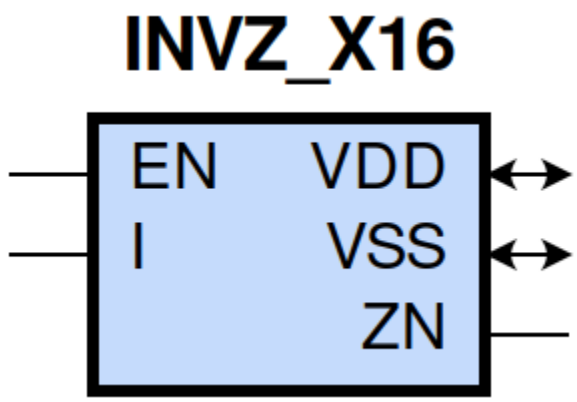

gf180mcu_fd_sc_mcu9t5v0__invz_x16 schematic

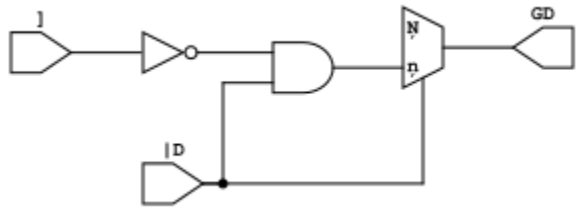

gf180mcu_fd_sc_mcu9t5v0__invz_x16 layout

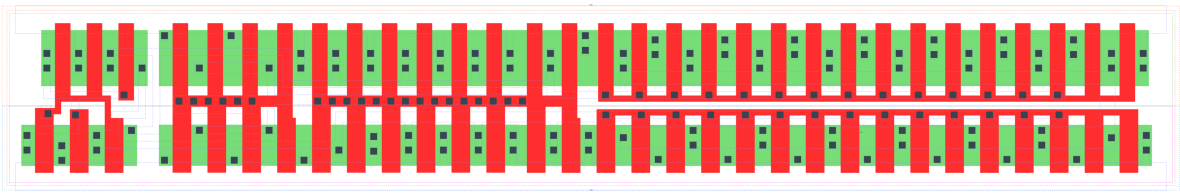

INVZ_X16 is a tri-state inverter with 16X drive strength

Attributes

Attribute	Value
area	186.278400 μm^2

OUTPUT FUNCTIONS

Output Pin	Function
ZN	(!I)

TRUTH TABLE FOR ZN

EN	I	ZN
1	0	1
1	1	0
0	?	z

FUNCTIONAL SCHEMATIC

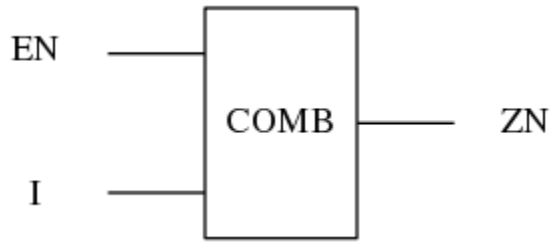

PIN CAPACITANCE (pf)

Pin	Type	Capacitance (pf)
EN	input	0.0137
I	input	0.0266

DELAY AND OUTPUT TRANSITION TIME corresponding to min slew and load

Input Pin	Output	When Condition	Tin (ns)	Out Load (pf)	Delay (ns)	Tout (ns)
EN(LH)	ZN(ZL)	I	0.0100	0.0010	0.1877	0.0463
EN(LH)	ZN(ZH)	!I	0.0100	0.0010	0.2272	0.0559
EN(HL)	ZN(HZ)	!I	0.0100		0.5500	0.0000
EN(HL)	ZN(LZ)	I	0.0100		0.4220	0.0000
I(LH)	ZN(HL)	EN	0.0100	0.0010	0.3110	0.0440
I(HL)	ZN(LH)	EN	0.0100	0.0010	0.3849	0.0528

DYNAMIC ENERGY

Input Pin	When Condition	Tin (ns)	Output	Out Load (pf)	Energy (uW/MHz)
I	EN	0.0100	ZN(HL)	0.0010	3.2382
I	EN	0.0100	ZN(LH)	0.0010	3.3619
EN	I	0.0100	ZN(HL)	0.0010	2.0436
EN(HL)	I	0.0100	n/a	n/a	0.3721
EN(HL)	!I	0.0100	n/a	n/a	0.8279
EN	!I	0.0100	ZN(LH)	0.0010	1.9220
I(LH)	!EN	0.0100	n/a	n/a	0.4142
I(HL)	!EN	0.0100	n/a	n/a	1.0985

LEAKAGE POWER

When Condition	Power (nW)
!EN&!I	0.4397
!EN&I	0.4447
EN&!I	0.8800
EN&I	0.8938

gf180mcu_fd_sc_mcu9t5v0__invz_2

gf180mcu_fd_sc_mcu9t5v0__invz_2 symbol

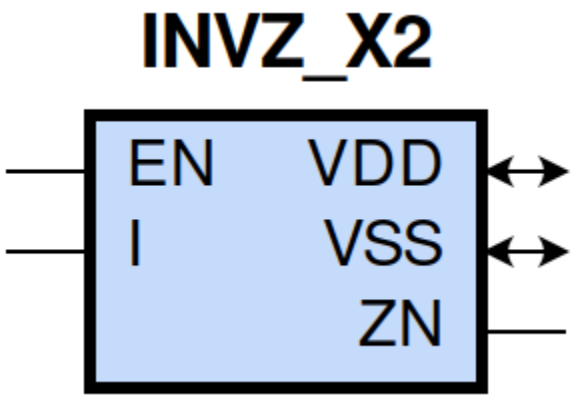

gf180mcu_fd_sc_mcu9t5v0__invz_2 schematic

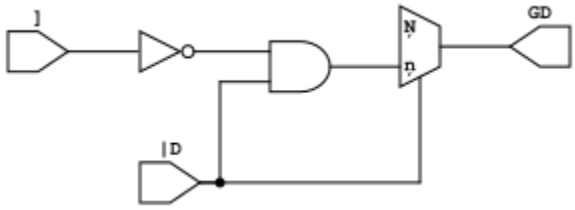

gf180mcu_fd_sc_mcu9t5v0__invz_2 layout

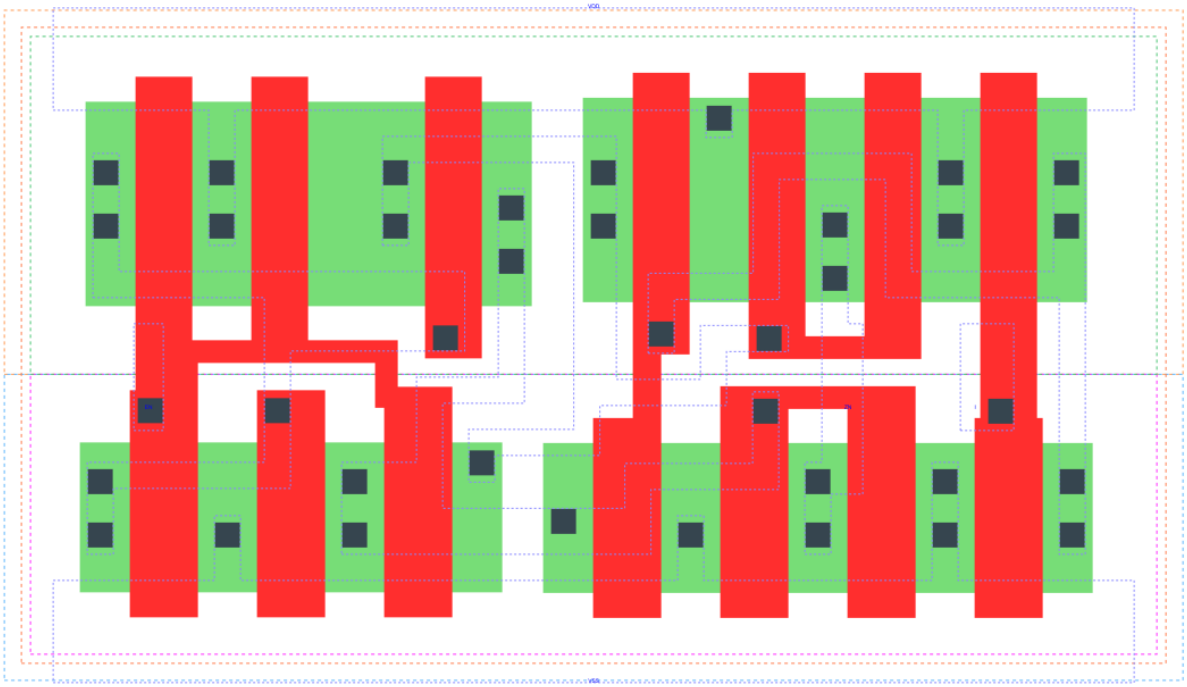

INVZ_X2 is a tri-state inverter with 2X drive strength

Attributes

Attribute	Value
area	47.980800 μm^2

OUTPUT FUNCTIONS

Output Pin	Function
ZN	(!I)

TRUTH TABLE FOR ZN

EN	I	ZN
1	0	1
1	1	0
0	?	z

FUNCTIONAL SCHEMATIC

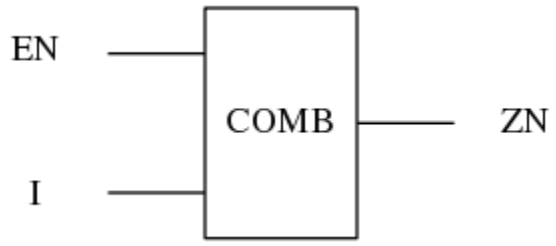

PIN CAPACITANCE (pf)

Pin	Type	Capacitance (pf)
EN	input	0.0137
I	input	0.0070

DELAY AND OUTPUT TRANSITION TIME corresponding to min slew and load

Input Pin	Output	When Condition	Tin (ns)	Out Load (pf)	Delay (ns)	Tout (ns)
EN(LH)	ZN(ZL)	I	0.0100	0.0010	0.1267	0.0319
EN(LH)	ZN(ZH)	!I	0.0100	0.0010	0.1095	0.0300
EN(HL)	ZN(HZ)	!I	0.0100		0.1280	0.0000
EN(HL)	ZN(LZ)	I	0.0100		0.1810	0.0000
I(LH)	ZN(HL)	EN	0.0100	0.0010	0.2898	0.0374
I(HL)	ZN(LH)	EN	0.0100	0.0010	0.3031	0.0323

DYNAMIC ENERGY

Input Pin	When Condition	Tin (ns)	Output	Out Load (pf)	Energy (uW/MHz)
I	EN	0.0100	ZN(HL)	0.0010	0.7256
I	EN	0.0100	ZN(LH)	0.0010	0.6363
EN	I	0.0100	ZN(HL)	0.0010	0.4479
EN(HL)	I	0.0100	n/a	n/a	0.3696
EN(HL)	!I	0.0100	n/a	n/a	0.4709
EN	!I	0.0100	ZN(LH)	0.0010	0.2666
I(LH)	!EN	0.0100	n/a	n/a	0.0550
I(HL)	!EN	0.0100	n/a	n/a	0.2363

LEAKAGE POWER

When Condition	Power (nW)
!EN&!I	0.1797
!EN&I	0.1810
EN&!I	0.2573
EN&I	0.2585

gf180mcu_fd_sc_mcu9t5v0__invz_3

gf180mcu_fd_sc_mcu9t5v0__invz_3 symbol

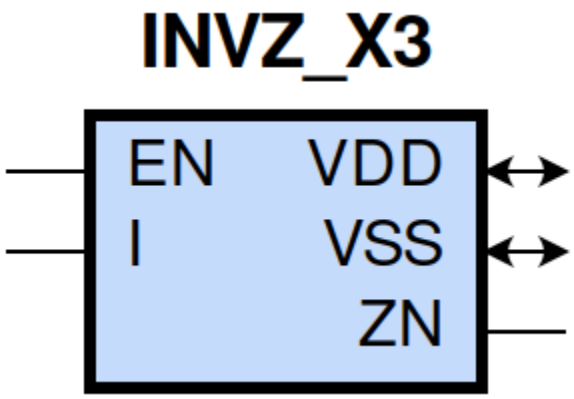

gf180mcu_fd_sc_mcu9t5v0__invz_3 schematic

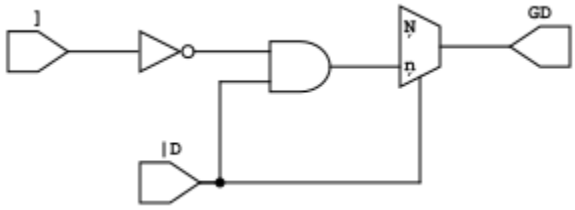

gf180mcu_fd_sc_mcu9t5v0__invz_3 layout

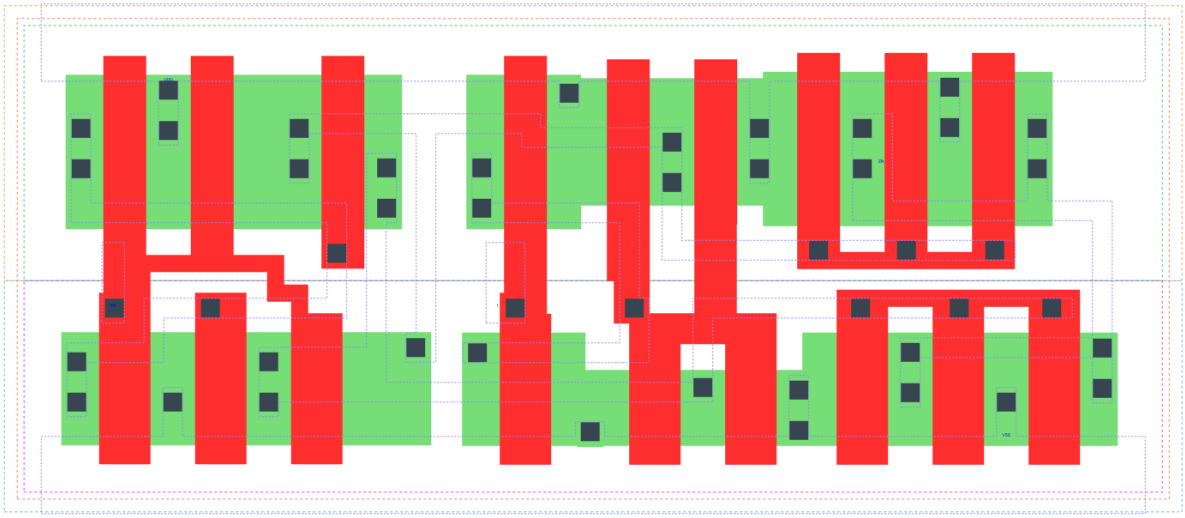

INVZ_X3 is a tri-state inverter with 3X drive strength

Attributes

Attribute	Value
area	64.915200 μm^2

OUTPUT FUNCTIONS

Output Pin	Function
ZN	(!I)

TRUTH TABLE FOR ZN

EN	I	ZN
1	0	1
1	1	0
0	?	z

FUNCTIONAL SCHEMATIC

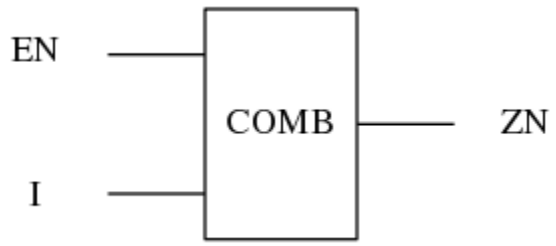

PIN CAPACITANCE (pf)

Pin	Type	Capacitance (pf)
EN	input	0.0136
I	input	0.0069

DELAY AND OUTPUT TRANSITION TIME corresponding to min slew and load

Input Pin	Output	When Condition	Tin (ns)	Out Load (pf)	Delay (ns)	Tout (ns)
EN(LH)	ZN(ZL)	I	0.0100	0.0010	0.1309	0.0321
EN(LH)	ZN(ZH)	!I	0.0100	0.0010	0.1277	0.0351
EN(HL)	ZN(HZ)	!I	0.0100		0.1630	0.0000
EN(HL)	ZN(LZ)	I	0.0100		0.2010	0.0000
I(LH)	ZN(HL)	EN	0.0100	0.0010	0.2742	0.0350
I(HL)	ZN(LH)	EN	0.0100	0.0010	0.3241	0.0357

DYNAMIC ENERGY

Input Pin	When Condition	Tin (ns)	Output	Out Load (pf)	Energy (uW/MHz)
I	EN	0.0100	ZN(HL)	0.0010	0.9443
I	EN	0.0100	ZN(LH)	0.0010	0.8075
EN	I	0.0100	ZN(HL)	0.0010	0.5534
EN(HL)	I	0.0100	n/a	n/a	0.3727
EN(HL)	!I	0.0100	n/a	n/a	0.5250
EN	!I	0.0100	ZN(LH)	0.0010	0.3994
I(LH)	!EN	0.0100	n/a	n/a	0.0930
I(HL)	!EN	0.0100	n/a	n/a	0.2598

LEAKAGE POWER

When Condition	Power (nW)
!EN&!I	0.1927
!EN&I	0.1939
EN&!I	0.3093
EN&I	0.3107

gf180mcu_fd_sc_mcu9t5v0__invz_4

gf180mcu_fd_sc_mcu9t5v0__invz_4 symbol

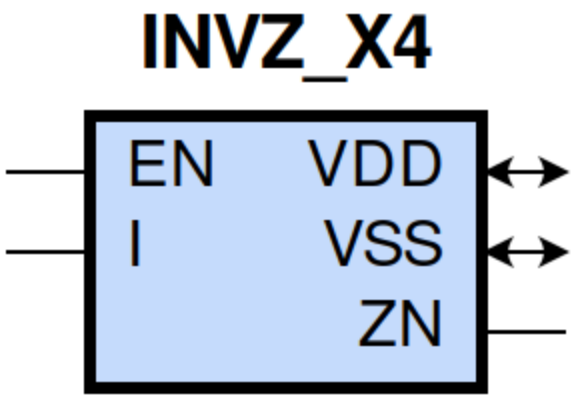

gf180mcu_fd_sc_mcu9t5v0__invz_4 schematic

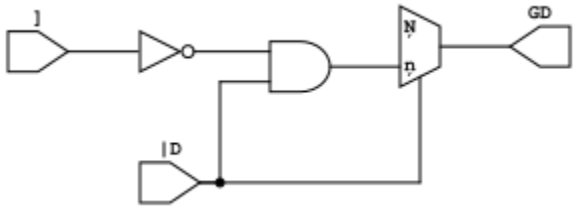

gf180mcu_fd_sc_mcu9t5v0__invz_4 layout

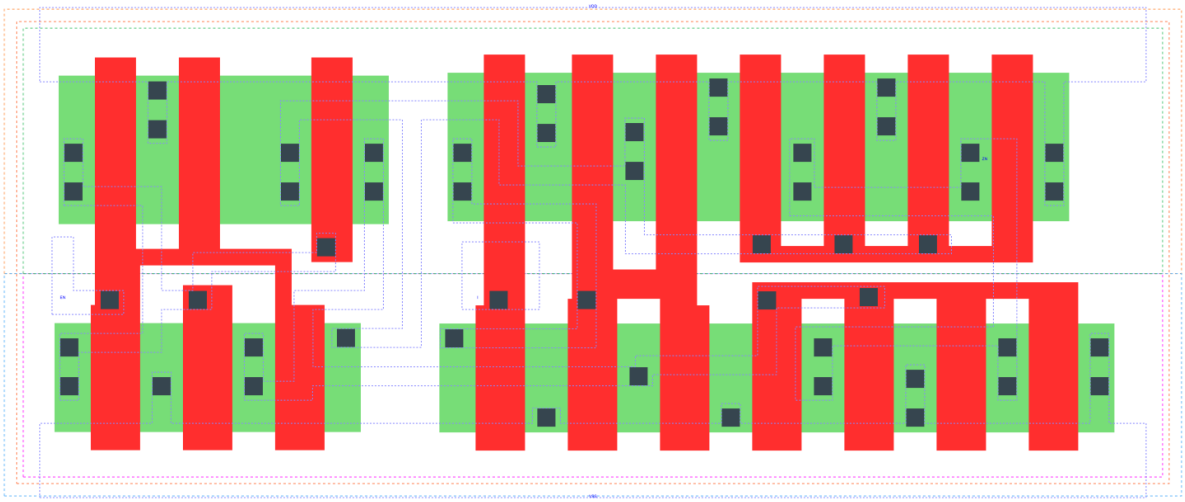

INVZ_X4 is a tri-state inverter with 4X drive strength

Attributes

Attribute	Value
area	67.737600 μm^2

OUTPUT FUNCTIONS

Output Pin	Function
ZN	(!I)

TRUTH TABLE FOR ZN

EN	I	ZN
1	0	1
1	1	0
0	?	z

FUNCTIONAL SCHEMATIC

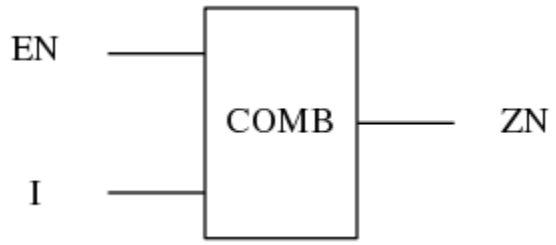

PIN CAPACITANCE (pf)

Pin	Type	Capacitance (pf)
EN	input	0.0139
I	input	0.0071

DELAY AND OUTPUT TRANSITION TIME corresponding to min slew and load

Input Pin	Output	When Condition	Tin (ns)	Out Load (pf)	Delay (ns)	Tout (ns)
EN(LH)	ZN(ZL)	I	0.0100	0.0010	0.1285	0.0303
EN(LH)	ZN(ZH)	!I	0.0100	0.0010	0.1283	0.0329
EN(HL)	ZN(HZ)	!I	0.0100		0.1860	0.0000
EN(HL)	ZN(LZ)	I	0.0100		0.2150	0.0000
I(LH)	ZN(HL)	EN	0.0100	0.0010	0.2792	0.0324
I(HL)	ZN(LH)	EN	0.0100	0.0010	0.3135	0.0329

DYNAMIC ENERGY

Input Pin	When Condition	Tin (ns)	Output	Out Load (pf)	Energy (uW/MHz)
I	EN	0.0100	ZN(HL)	0.0010	1.0975
I	EN	0.0100	ZN(LH)	0.0010	0.9407
EN	I	0.0100	ZN(HL)	0.0010	0.6377
EN(HL)	I	0.0100	n/a	n/a	0.3684
EN(HL)	!I	0.0100	n/a	n/a	0.5308
EN	!I	0.0100	ZN(LH)	0.0010	0.4932
I(LH)	!EN	0.0100	n/a	n/a	0.1143
I(HL)	!EN	0.0100	n/a	n/a	0.2944

LEAKAGE POWER

When Condition	Power (nW)
!EN&!I	0.2058
!EN&I	0.2071
EN&!I	0.3353
EN&I	0.3378

gf180mcu_fd_sc_mcu9t5v0__invz_8

gf180mcu_fd_sc_mcu9t5v0__invz_8 symbol

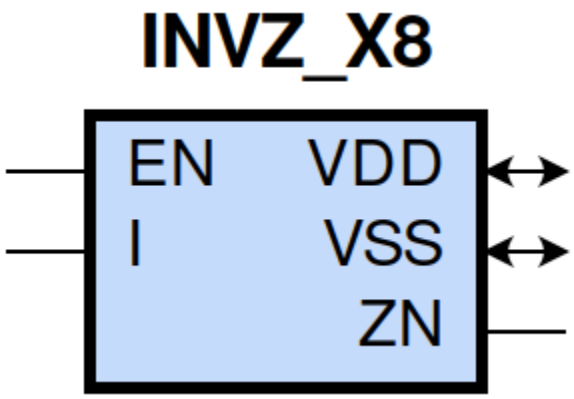

gf180mcu_fd_sc_mcu9t5v0__invz_8 schematic

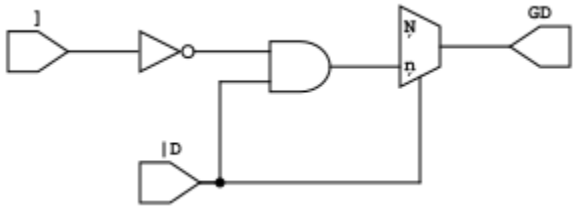

gf180mcu_fd_sc_mcu9t5v0__invz_8 layout

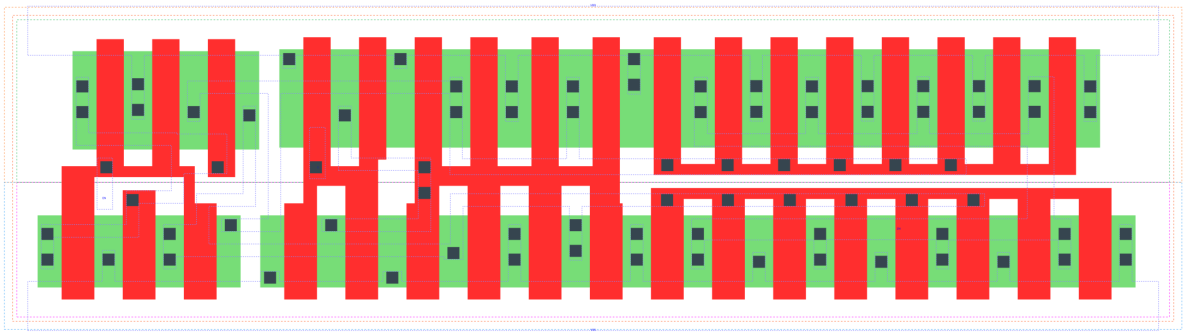

INVZ_X8 is a tri-state inverter with 8X drive strength

Attributes

Attribute	Value
area	104.428800 μm^2

OUTPUT FUNCTIONS

Output Pin	Function
ZN	(!I)

TRUTH TABLE FOR ZN

EN	I	ZN
1	0	1
1	1	0
0	?	z

FUNCTIONAL SCHEMATIC

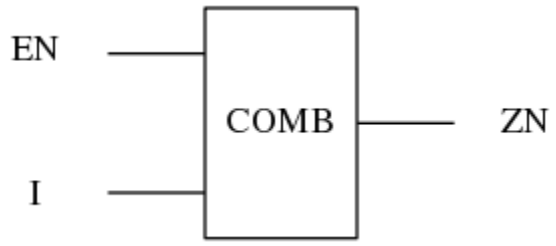

PIN CAPACITANCE (pf)

Pin	Type	Capacitance (pf)
EN	input	0.0138
I	input	0.0133

DELAY AND OUTPUT TRANSITION TIME corresponding to min slew and load

Input Pin	Output	When Condition	Tin (ns)	Out Load (pf)	Delay (ns)	Tout (ns)
EN(LH)	ZN(ZL)	I	0.0100	0.0010	0.1487	0.0352
EN(LH)	ZN(ZH)	!I	0.0100	0.0010	0.1612	0.0401
EN(HL)	ZN(HZ)	!I	0.0100		0.2970	0.0000
EN(HL)	ZN(LZ)	I	0.0100		0.2850	0.0000
I(LH)	ZN(HL)	EN	0.0100	0.0010	0.2694	0.0341
I(HL)	ZN(LH)	EN	0.0100	0.0010	0.3153	0.0389

DYNAMIC ENERGY

Input Pin	When Condition	Tin (ns)	Output	Out Load (pf)	Energy (uW/MHz)
I	EN	0.0100	ZN(HL)	0.0010	1.7678
I	EN	0.0100	ZN(LH)	0.0010	1.6895
EN	I	0.0100	ZN(HL)	0.0010	1.0936
EN(HL)	I	0.0100	n/a	n/a	0.3724
EN(HL)	!I	0.0100	n/a	n/a	0.6181
EN	!I	0.0100	ZN(LH)	0.0010	0.9551
I(LH)	!EN	0.0100	n/a	n/a	0.2038
I(HL)	!EN	0.0100	n/a	n/a	0.5267

LEAKAGE POWER

When Condition	Power (nW)
!EN&!I	0.2834
!EN&I	0.2859
EN&!I	0.5168
EN&I	0.5231

gf180mcu_fd_sc_mcu9t5v0__latq_1

gf180mcu_fd_sc_mcu9t5v0__latq_1 symbol

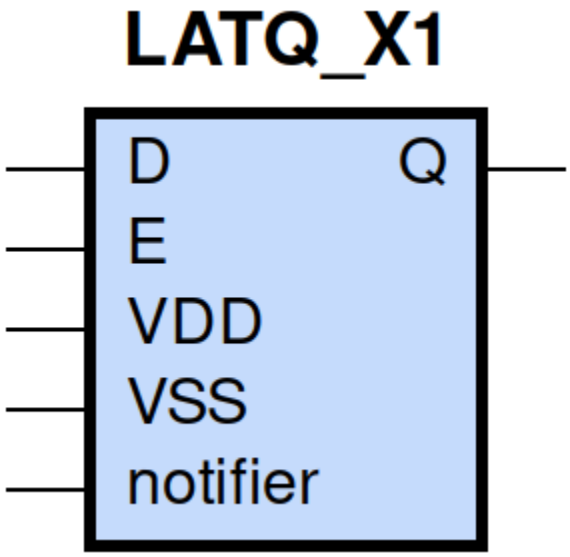

gf180mcu_fd_sc_mcu9t5v0__latq_1 schematic

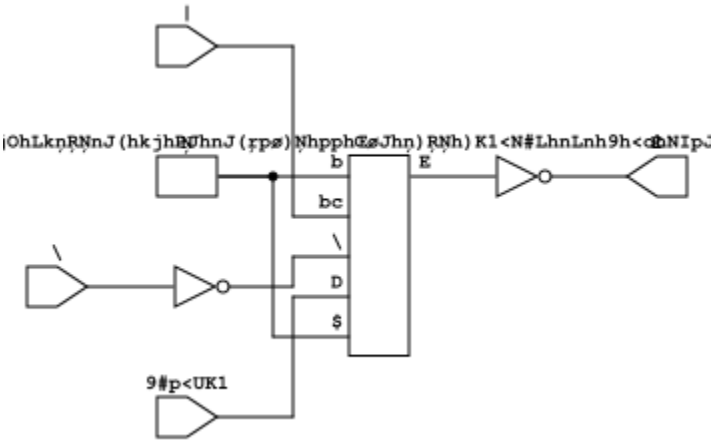

gf180mcu_fd_sc_mcu9t5v0__latq_1 layout

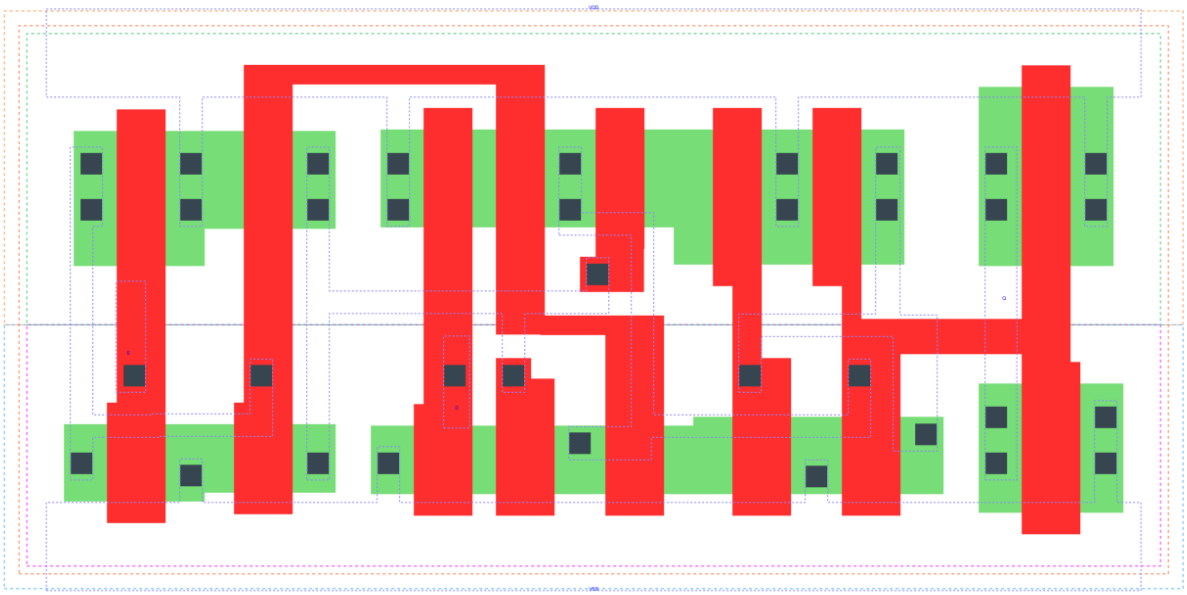

LATQ_X1 is a positive D-latch with 1X drive strength

Attributes

Attribute	Value
area	56.448000 μm^2

TRUTH TABLE

Input		Output
D	E	Q
L	H	L
H	H	H
X	L	Q

FUNCTIONAL SCHEMATIC

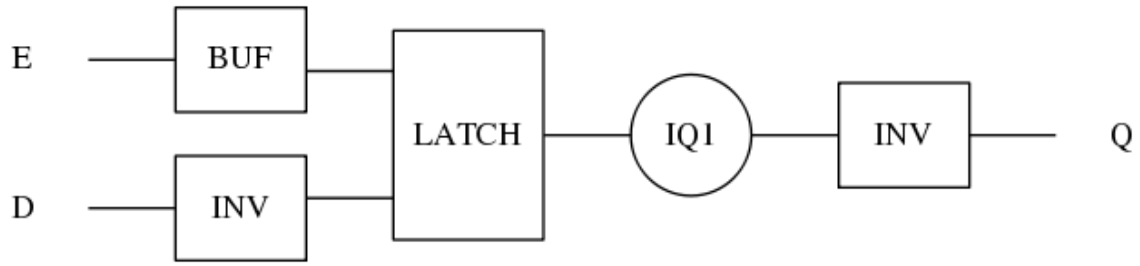

CONSTRAINTS

Constraint Pin	Related Pin	setup(ns)	hold(ns)
D(LH)	E(HL)	0.1550	-0.0800
D(HL)	E(HL)	0.4640	-0.3490

Constraint Pin	Related Pin	Minimum Pulse Width(ns)
E(LHL)	E(LH)	0.5050
E(LHL)	E(LH)	0.3490

PIN CAPACITANCE (pf)

Pin	Type	Capacitance (pf)
E	input	0.0051
D	input	0.0040

DELAY AND OUTPUT TRANSITION TIME corresponding to min slew and load

Input Pin	Output	When Condition	Tin (ns)	Out Load (pf)	Delay (ns)	Tout (ns)
E(LH)	Q(LH)	D	0.0100	0.0010	0.4715	0.0478
E(LH)	Q(HL)	!D	0.0100	0.0010	0.4295	0.0654
D(LH)	Q(LH)	E	0.0100	0.0010	0.2898	0.0481
D(HL)	Q(HL)	E	0.0100	0.0010	0.3938	0.0661

DYNAMIC ENERGY

Input Pin	When Condition	Tin (ns)	Output	Out Load (pf)	Energy (uW/MHz)
D	E	0.0100	Q(LH)	0.0010	0.4241
D	E	0.0100	Q(HL)	0.0010	0.6519
E	D	0.0100	Q(LH)	0.0010	0.6130
E	!D	0.0100	Q(HL)	0.0010	0.7522
E(LH)	!D	0.0100	n/a	n/a	0.1652
E(LH)	D	0.0100	n/a	n/a	0.1625
D(LH)	!E	0.0100	n/a	n/a	-0.0316
E(HL)	!D	0.0100	n/a	n/a	0.3050
E(HL)	D	0.0100	n/a	n/a	0.3076
D(HL)	!E	0.0100	n/a	n/a	0.0342

LEAKAGE POWER

When Condition	Power (nW)
!D&!E	0.3372
D&!E	0.3677
!D&E	0.2461
D&E	0.2415

gf180mcu_fd_sc_mcu9t5v0__latq_2

gf180mcu_fd_sc_mcu9t5v0__latq_2 symbol

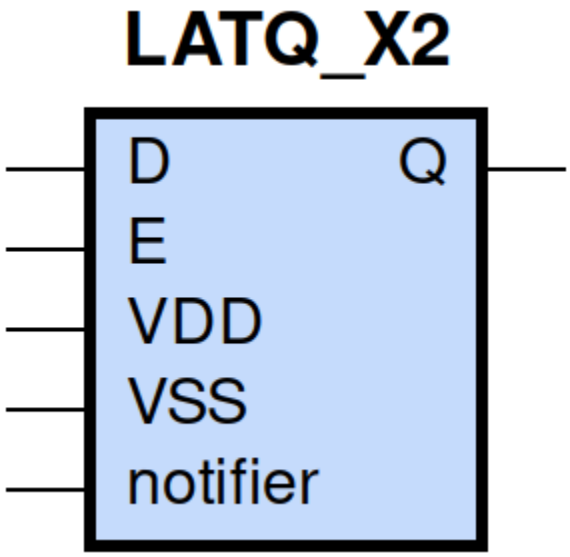

gf180mcu_fd_sc_mcu9t5v0__latq_2 schematic

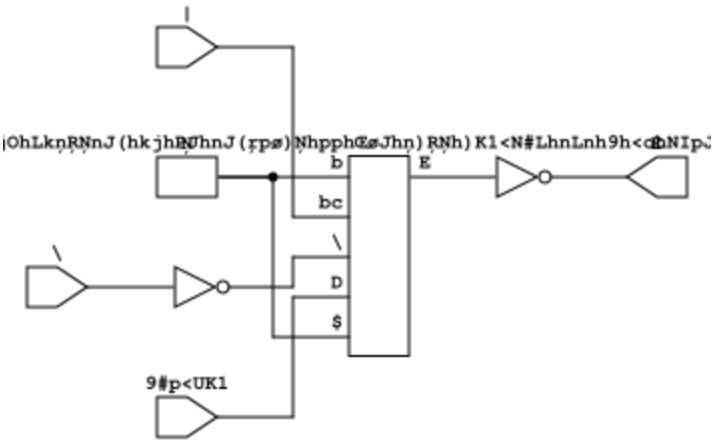

gf180mcu_fd_sc_mcu9t5v0__latq_2 layout

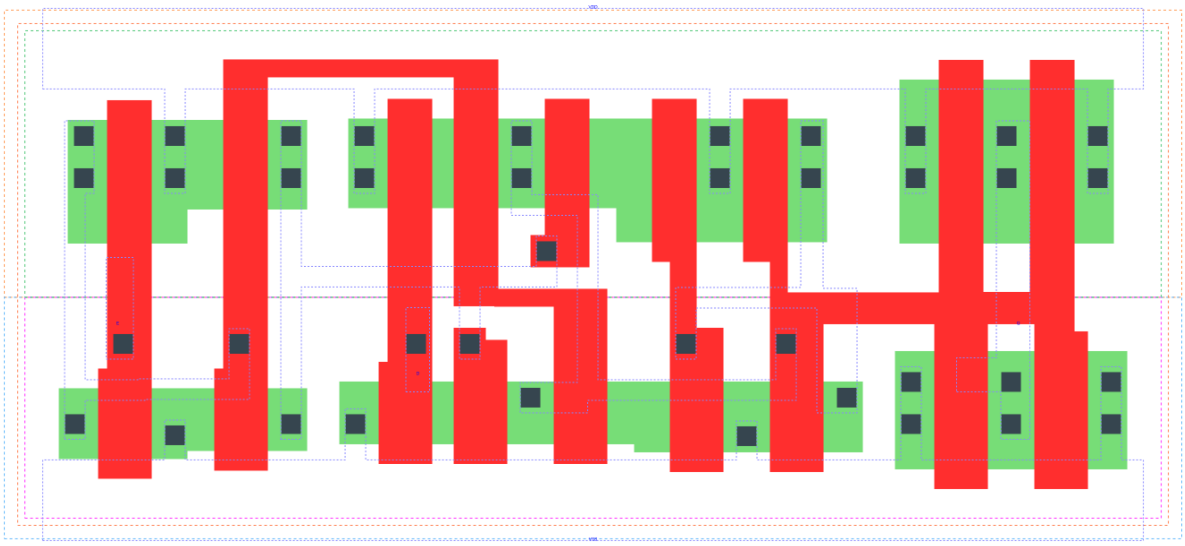

LATQ_X2 is a positive D-latch with 2X drive strength

Attributes

Attribute	Value
area	62.092800 μm^2

TRUTH TABLE

Input		Output
D	E	Q
L	H	L
H	H	H
X	L	Q

FUNCTIONAL SCHEMATIC

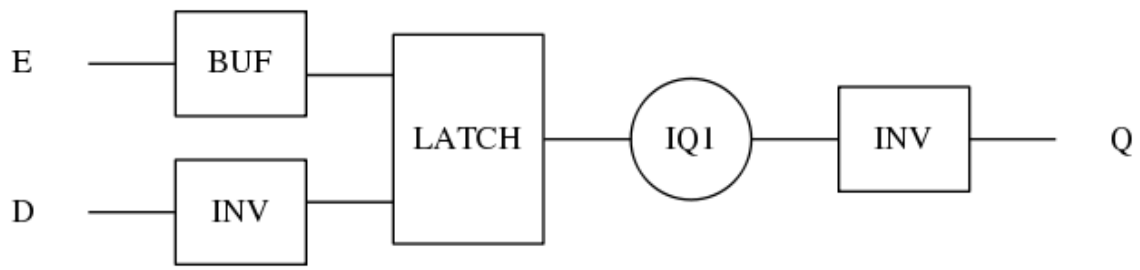

CONSTRAINTS

Constraint Pin	Related Pin	setup(ns)	hold(ns)
D(LH)	E(HL)	0.2180	-0.1430
D(HL)	E(HL)	0.5150	-0.4290

Constraint Pin	Related Pin	Minimum Pulse Width(ns)
E(LHL)	E(LH)	0.5540
E(LHL)	E(LH)	0.4170

PIN CAPACITANCE (pf)

Pin	Type	Capacitance (pf)
E	input	0.0051
D	input	0.0040

DELAY AND OUTPUT TRANSITION TIME corresponding to min slew and load

Input Pin	Output	When Condition	Tin (ns)	Out Load (pf)	Delay (ns)	Tout (ns)
E(LH)	Q(LH)	D	0.0100	0.0010	0.5248	0.0467
E(LH)	Q(HL)	!D	0.0100	0.0010	0.5128	0.0722
D(LH)	Q(LH)	E	0.0100	0.0010	0.3438	0.0466
D(HL)	Q(HL)	E	0.0100	0.0010	0.4764	0.0722

DYNAMIC ENERGY

Input Pin	When Condition	Tin (ns)	Output	Out Load (pf)	Energy (uW/MHz)
D	E	0.0100	Q(LH)	0.0010	0.6798
D	E	0.0100	Q(HL)	0.0010	1.1092
E	D	0.0100	Q(LH)	0.0010	0.8668
E	!D	0.0100	Q(HL)	0.0010	1.2116
E(LH)	!D	0.0100	n/a	n/a	0.1654
E(LH)	D	0.0100	n/a	n/a	0.1628
D(LH)	!E	0.0100	n/a	n/a	-0.0316
E(HL)	!D	0.0100	n/a	n/a	0.3054
E(HL)	D	0.0100	n/a	n/a	0.3081
D(HL)	!E	0.0100	n/a	n/a	0.0343

LEAKAGE POWER

When Condition	Power (nW)
!D&!E	0.3640
D&!E	0.3933
!D&E	0.2730
D&E	0.2671

gf180mcu_fd_sc_mcu9t5v0__latq_4

gf180mcu_fd_sc_mcu9t5v0__latq_4 symbol

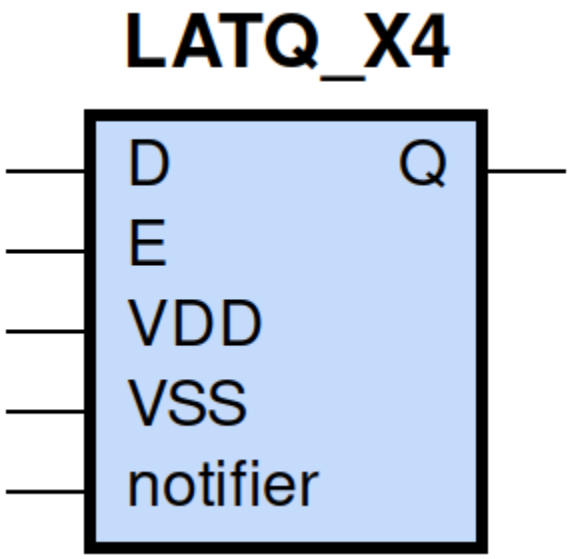

gf180mcu_fd_sc_mcu9t5v0__latq_4 schematic

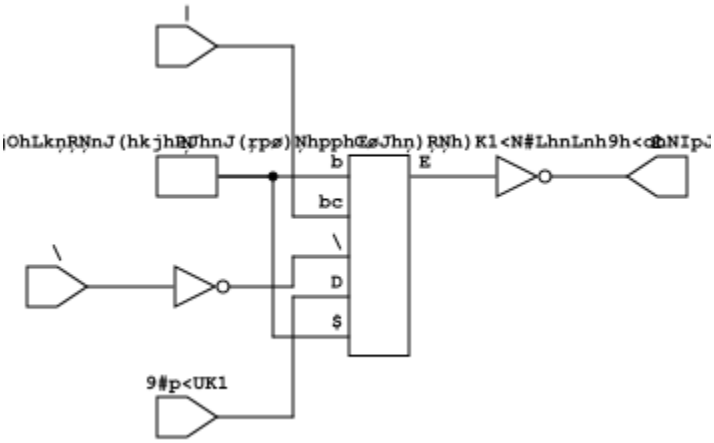

gf180mcu_fd_sc_mcu9t5v0__latq_4 layout

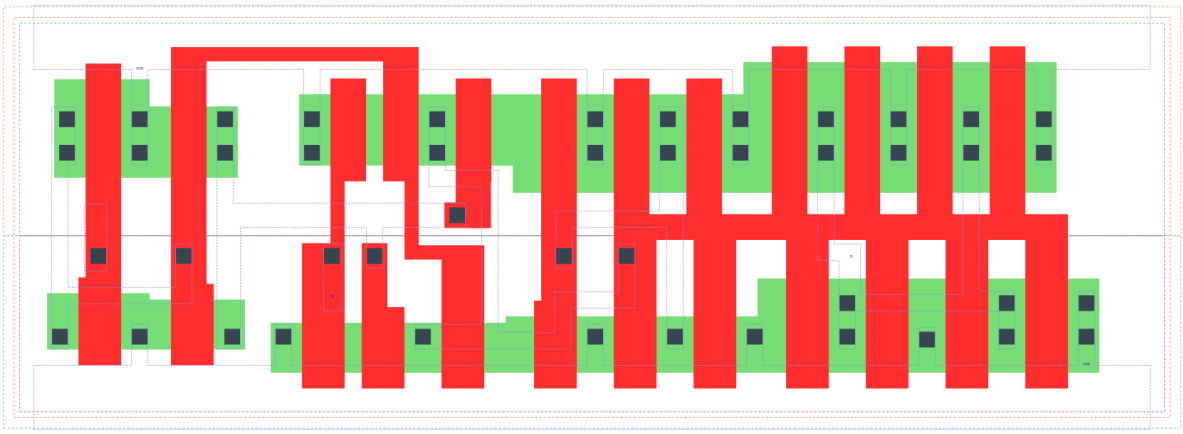

LATQ_X4 is a positive D-latch with 4X drive strength

Attributes

Attribute	Value
area	79.027200 μm^2

TRUTH TABLE

Input		Output
D	E	Q
L	H	L
H	H	H
X	L	Q

FUNCTIONAL SCHEMATIC

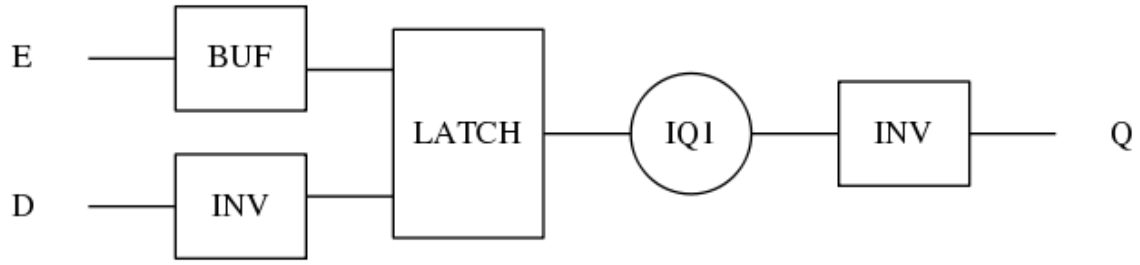

CONSTRAINTS

Constraint Pin	Related Pin	setup(ns)	hold(ns)
D(LH)	E(HL)	0.3720	-0.3030
D(HL)	E(HL)	0.7500	-0.6530

Constraint Pin	Related Pin	Minimum Pulse Width(ns)
E(LHL)	E(LH)	0.7880
E(LHL)	E(LH)	0.5640

PIN CAPACITANCE (pf)

Pin	Type	Capacitance (pf)
E	input	0.0050
D	input	0.0041

DELAY AND OUTPUT TRANSITION TIME corresponding to min slew and load

Input Pin	Output	When Condition	Tin (ns)	Out Load (pf)	Delay (ns)	Tout (ns)
E(LH)	Q(LH)	D	0.0100	0.0010	0.7084	0.0664
E(LH)	Q(HL)	!D	0.0100	0.0010	0.7867	0.1116
D(LH)	Q(LH)	E	0.0100	0.0010	0.5292	0.0670
D(HL)	Q(HL)	E	0.0100	0.0010	0.7494	0.1116

DYNAMIC ENERGY

Input Pin	When Condition	Tin (ns)	Output	Out Load (pf)	Energy (uW/MHz)
D	E	0.0100	Q(LH)	0.0010	1.7868
D	E	0.0100	Q(HL)	0.0010	3.1045
E	D	0.0100	Q(LH)	0.0010	1.9720
E	!D	0.0100	Q(HL)	0.0010	3.2146
E(LH)	!D	0.0100	n/a	n/a	0.1685
E(LH)	D	0.0100	n/a	n/a	0.1658
D(LH)	!E	0.0100	n/a	n/a	-0.0316
E(HL)	!D	0.0100	n/a	n/a	0.3016
E(HL)	D	0.0100	n/a	n/a	0.3045
D(HL)	!E	0.0100	n/a	n/a	0.0342

LEAKAGE POWER

When Condition	Power (nW)
!D&!E	0.4428
D&!E	0.4700
!D&E	0.3533
D&E	0.3437

gf180mcu_fd_sc_mcu9t5v0__latrnq_1

gf180mcu_fd_sc_mcu9t5v0__latrnq_1 symbol

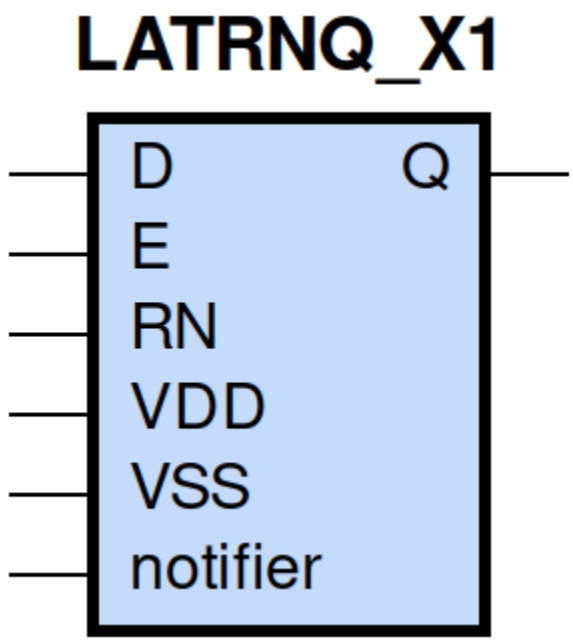

gf180mcu_fd_sc_mcu9t5v0__latrnq_1 schematic

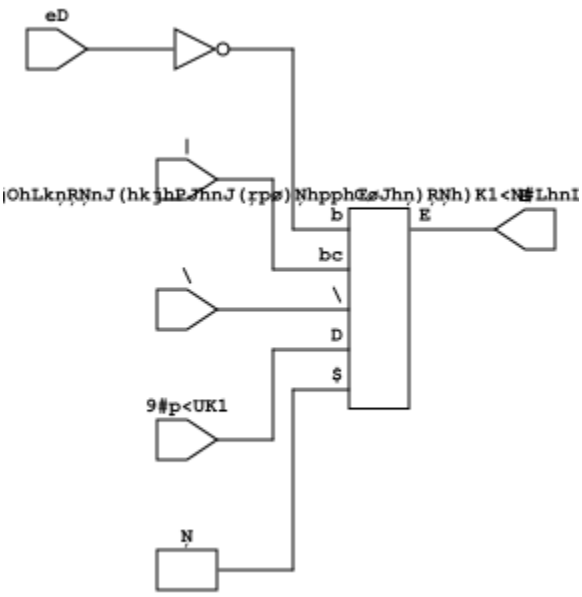

gf180mcu_fd_sc_mcu9t5v0__latrnq_1 layout

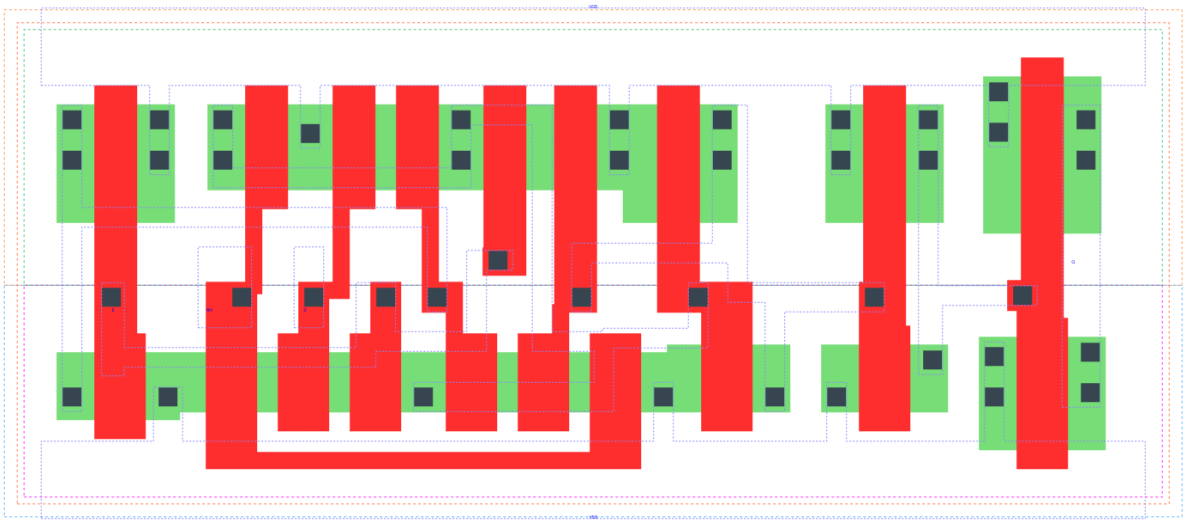

LATRNQ_X1 is a positive D-latch with active low reset and 1X drive strength

Attributes

Attribute	Value
area	64.915200 μm^2

TRUTH TABLE

Input			Output
RN	D	E	Q
H	L	H	L
H	H	H	H
H	X	L	Q
L	X	X	L

FUNCTIONAL SCHEMATIC

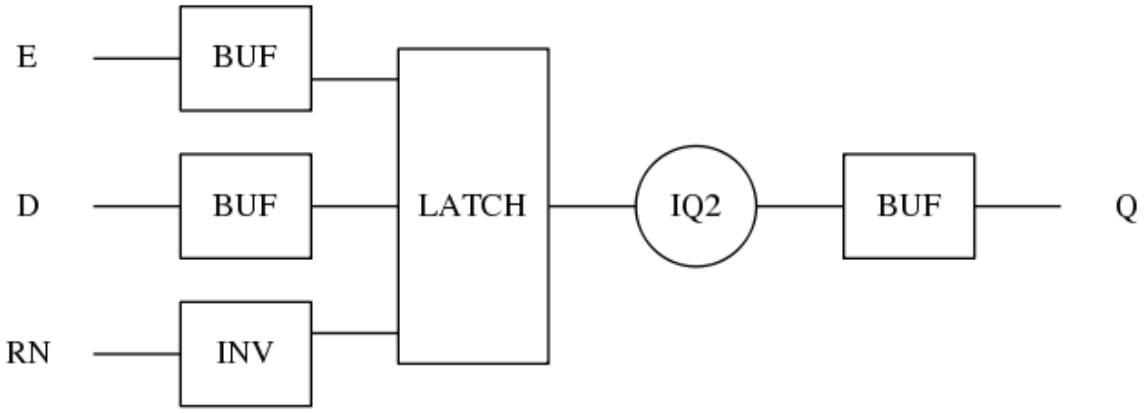

CONSTRAINTS

Constraint Pin	Related Pin	setup(ns)	hold(ns)
D(HL)	E(HL)	0.3660	-0.3150
D(LH)	E(HL)	0.3320	-0.2920

Constraint Pin	Related Pin	recovery(ns)	removal(ns)
RN(LH)	E(HL)	0.3430	-0.3030

Constraint Pin	Related Pin	Minimum Pulse Width(ns)
E(LHL)	E(LH)	0.4170
E(LHL)	E(LH)	0.2900
RN(HLH)	RN(HL)	0.2710
RN(HLH)	RN(HL)	0.2710

PIN CAPACITANCE (pf)

Pin	Type	Capacitance (pf)
E	input	0.0102
RN	input	0.0065
D	input	0.0041

DELAY AND OUTPUT TRANSITION TIME corresponding to min slew and load

Input Pin	Output	When Condition	Tin (ns)	Out Load (pf)	Delay (ns)	Tout (ns)
E(LH)	Q(LH)	D&RN	0.0100	0.0010	0.4872	0.0332
E(LH)	Q(HL)	!D&RN	0.0100	0.0010	0.6260	0.0276
RN(HL)	Q(HL)	!D&!E	0.0100	0.0010	0.4574	0.0274
RN(HL)	Q(HL)	D&!E	0.0100	0.0010	0.4575	0.0273
RN(HL)	Q(HL)	D&E	0.0100	0.0010	0.4585	0.0275
RN(LH)	Q(LH)	D&E	0.0100	0.0010	0.5489	0.0331
D(LH)	Q(LH)	E&RN	0.0100	0.0010	0.5373	0.0332
D(HL)	Q(HL)	E&RN	0.0100	0.0010	0.5933	0.0277

DYNAMIC ENERGY

Input Pin	When Condition	Tin (ns)	Output	Out Load (pf)	Energy (uW/MHz)
E	D&RN	0.0100	Q(LH)	0.0010	0.4993
RN	!D&!E	0.0100	Q(HL)	0.0010	0.6339
RN	D&!E	0.0100	Q(HL)	0.0010	0.6353
RN	D&E	0.0100	Q(HL)	0.0010	0.6919
E	!D&RN	0.0100	Q(HL)	0.0010	0.6216
RN	D&E	0.0100	Q(LH)	0.0010	0.4967
D	E&RN	0.0100	Q(LH)	0.0010	0.4952
D	E&RN	0.0100	Q(HL)	0.0010	0.6635
D(HL)	!E&!RN	0.0100	n/a	n/a	0.0426
D(HL)	E&!RN	0.0100	n/a	n/a	0.0358
D(HL)	!E&RN	0.0100	n/a	n/a	0.0343
E(LH)	!D&!RN	0.0100	n/a	n/a	0.0095
E(LH)	D&!RN	0.0100	n/a	n/a	0.0429
E(LH)	!D&RN	0.0100	n/a	n/a	-0.0020
E(LH)	D&RN	0.0100	n/a	n/a	-0.0027
D(LH)	!E&!RN	0.0100	n/a	n/a	-0.0316
D(LH)	E&!RN	0.0100	n/a	n/a	-0.0259
D(LH)	!E&RN	0.0100	n/a	n/a	-0.0315
RN(HL)	!D&!E	0.0100	n/a	n/a	0.0349
RN(HL)	D&!E	0.0100	n/a	n/a	0.0379
RN(HL)	!D&E	0.0100	n/a	n/a	0.0347
RN(LH)	!D&!E	0.0100	n/a	n/a	-0.0321
RN(LH)	!D&E	0.0100	n/a	n/a	-0.0321
RN(LH)	D&!E	0.0100	n/a	n/a	-0.0321
E(HL)	!D&!RN	0.0100	n/a	n/a	0.2081
E(HL)	!D&RN	0.0100	n/a	n/a	0.2079
E(HL)	D&!RN	0.0100	n/a	n/a	0.2086
E(HL)	D&RN	0.0100	n/a	n/a	0.2089

LEAKAGE POWER

When Condition	Power (nW)
!D&!E&!RN	0.2448
!D&E&!RN	0.2460
!D&E&RN	0.2461
D&!E&!RN	0.2449
D&E&!RN	0.2853
!D&!E&RN	0.2939
D&!E&RN	0.3373
D&E&RN	0.2690

gf180mcu_fd_sc_mcu9t5v0__latrnq_2

gf180mcu_fd_sc_mcu9t5v0__latrnq_2 symbol

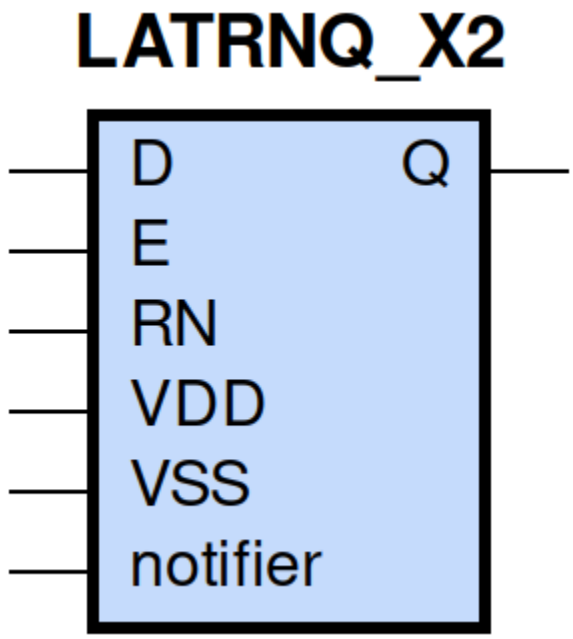

gf180mcu_fd_sc_mcu9t5v0__latrnq_2 schematic

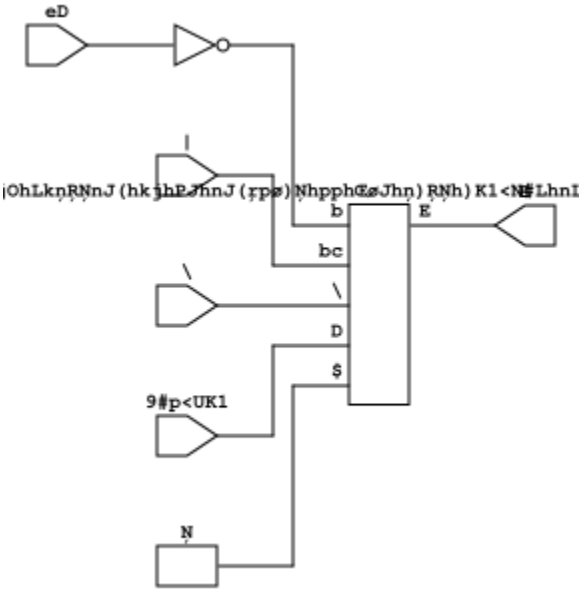

gf180mcu_fd_sc_mcu9t5v0__latrnq_2 layout

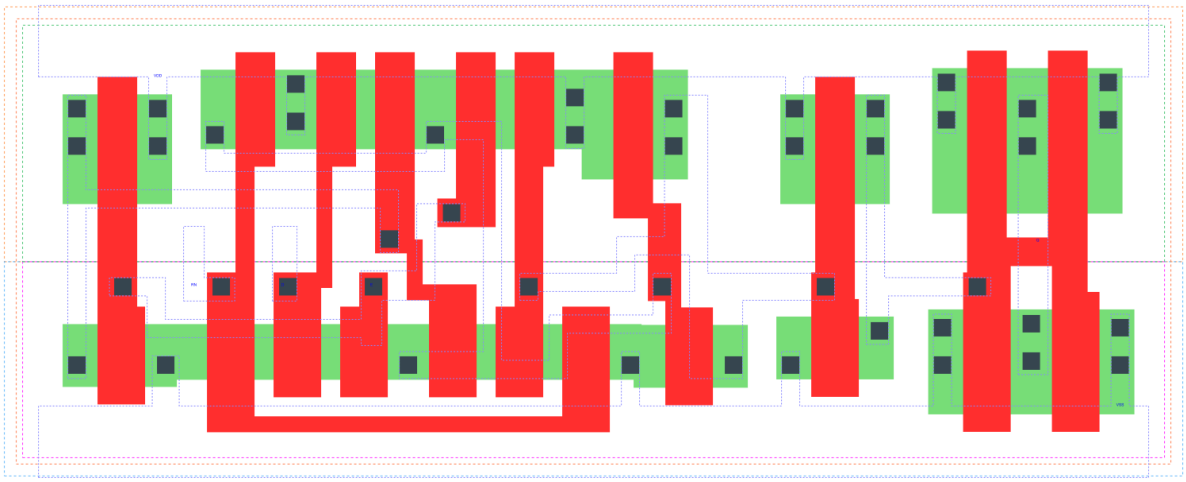

LATRNQ_X2 is a positive D-latch with active low reset and 2X drive strength

Attributes

Attribute	Value
area	70.560000 μm^2

TRUTH TABLE

Input			Output
RN	D	E	Q
H	L	H	L
H	H	H	H
H	X	L	Q
L	X	X	L

FUNCTIONAL SCHEMATIC

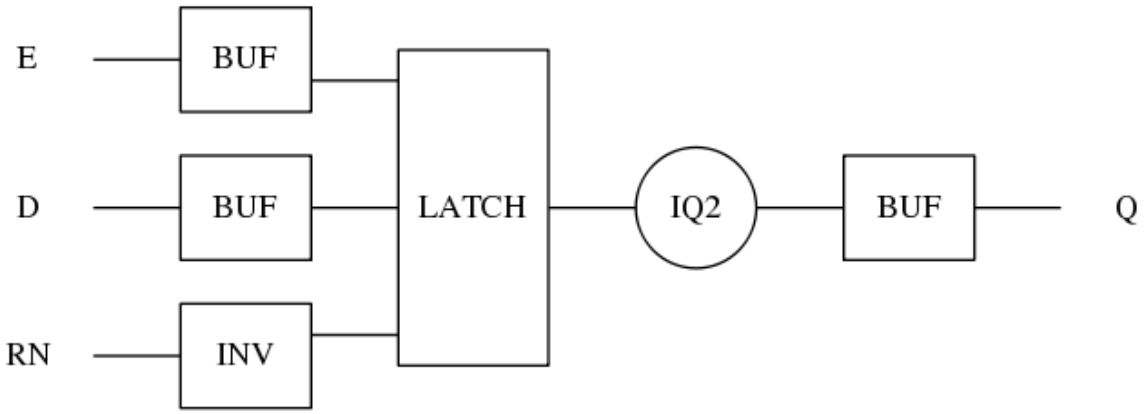

CONSTRAINTS

Constraint Pin	Related Pin	setup(ns)	hold(ns)
D(HL)	E(HL)	0.3660	-0.3150
D(LH)	E(HL)	0.3380	-0.2860

Constraint Pin	Related Pin	recovery(ns)	removal(ns)
RN(LH)	E(HL)	0.3490	-0.2980

Constraint Pin	Related Pin	Minimum Pulse Width(ns)
E(LHL)	E(LH)	0.4170
E(LHL)	E(LH)	0.2900
RN(HLH)	RN(HL)	0.2710
RN(HLH)	RN(HL)	0.2710

PIN CAPACITANCE (pf)

Pin	Type	Capacitance (pf)
E	input	0.0101
RN	input	0.0065
D	input	0.0042

DELAY AND OUTPUT TRANSITION TIME corresponding to min slew and load

Input Pin	Output	When Condition	Tin (ns)	Out Load (pf)	Delay (ns)	Tout (ns)
E(LH)	Q(LH)	D&RN	0.0100	0.0010	0.5207	0.0290
E(LH)	Q(HL)	!D&RN	0.0100	0.0010	0.6525	0.0291
RN(HL)	Q(HL)	!D&!E	0.0100	0.0010	0.4879	0.0289
RN(HL)	Q(HL)	D&!E	0.0100	0.0010	0.4881	0.0289
RN(HL)	Q(HL)	D&E	0.0100	0.0010	0.4895	0.0290
RN(LH)	Q(LH)	D&E	0.0100	0.0010	0.5825	0.0290
D(LH)	Q(LH)	E&RN	0.0100	0.0010	0.5707	0.0290
D(HL)	Q(HL)	E&RN	0.0100	0.0010	0.6217	0.0290

DYNAMIC ENERGY

Input Pin	When Condition	Tin (ns)	Output	Out Load (pf)	Energy (uW/MHz)
E	D&RN	0.0100	Q(LH)	0.0010	0.6460
RN	!D&!E	0.0100	Q(HL)	0.0010	0.8005
RN	D&!E	0.0100	Q(HL)	0.0010	0.8023
RN	D&E	0.0100	Q(HL)	0.0010	0.8587
E	!D&RN	0.0100	Q(HL)	0.0010	0.7872
RN	D&E	0.0100	Q(LH)	0.0010	0.6436
D	E&RN	0.0100	Q(LH)	0.0010	0.6421
D	E&RN	0.0100	Q(HL)	0.0010	0.8291
D(HL)	!E&!RN	0.0100	n/a	n/a	0.0427
D(HL)	E&!RN	0.0100	n/a	n/a	0.0358
D(HL)	!E&RN	0.0100	n/a	n/a	0.0343
E(LH)	!D&!RN	0.0100	n/a	n/a	0.0095
E(LH)	D&!RN	0.0100	n/a	n/a	0.0428
E(LH)	!D&RN	0.0100	n/a	n/a	-0.0019
E(LH)	D&RN	0.0100	n/a	n/a	-0.0028
D(LH)	!E&!RN	0.0100	n/a	n/a	-0.0316
D(LH)	E&!RN	0.0100	n/a	n/a	-0.0259
D(LH)	!E&RN	0.0100	n/a	n/a	-0.0315
RN(HL)	!D&!E	0.0100	n/a	n/a	0.0350
RN(HL)	D&!E	0.0100	n/a	n/a	0.0379
RN(HL)	!D&E	0.0100	n/a	n/a	0.0347
RN(LH)	!D&!E	0.0100	n/a	n/a	-0.0320
RN(LH)	!D&E	0.0100	n/a	n/a	-0.0320
RN(LH)	D&!E	0.0100	n/a	n/a	-0.0321
E(HL)	!D&!RN	0.0100	n/a	n/a	0.2023
E(HL)	!D&RN	0.0100	n/a	n/a	0.2022
E(HL)	D&!RN	0.0100	n/a	n/a	0.2028
E(HL)	D&RN	0.0100	n/a	n/a	0.2017

LEAKAGE POWER

When Condition	Power (nW)
!D&!E&!RN	0.2717
!D&E&!RN	0.2728
!D&E&RN	0.2730
D&!E&!RN	0.2717
D&E&!RN	0.3122
!D&!E&RN	0.3212
D&!E&RN	0.3556
D&E&RN	0.2946

gf180mcu_fd_sc_mcu9t5v0__latrnq_4

gf180mcu_fd_sc_mcu9t5v0__latrnq_4 symbol

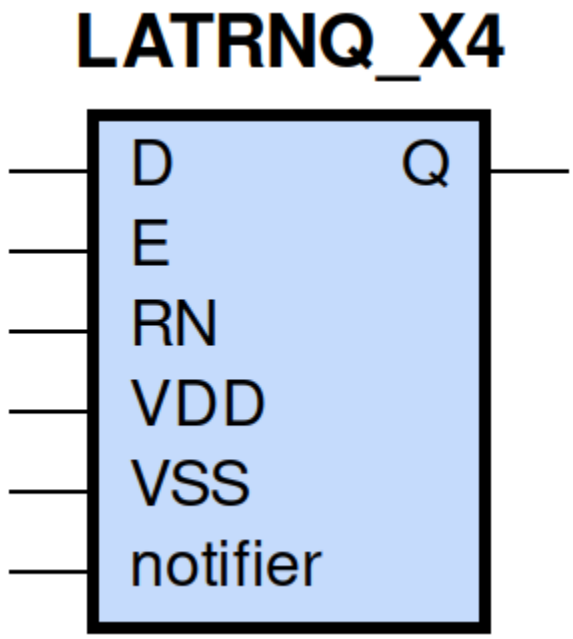

gf180mcu_fd_sc_mcu9t5v0__latrnq_4 schematic

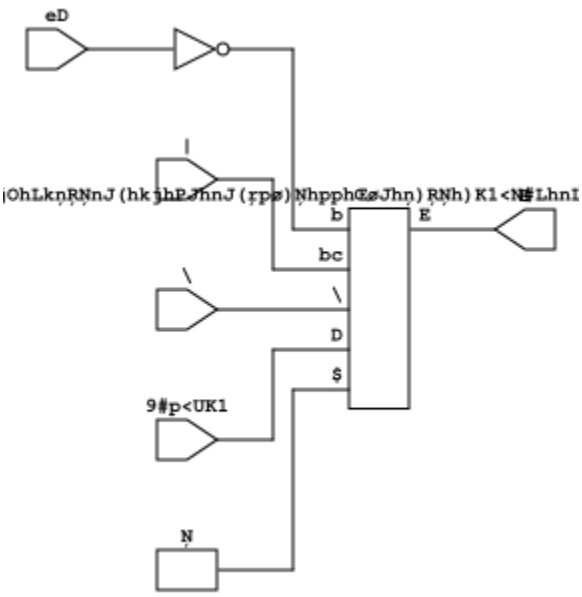

gf180mcu_fd_sc_mcu9t5v0__latrnq_4 layout

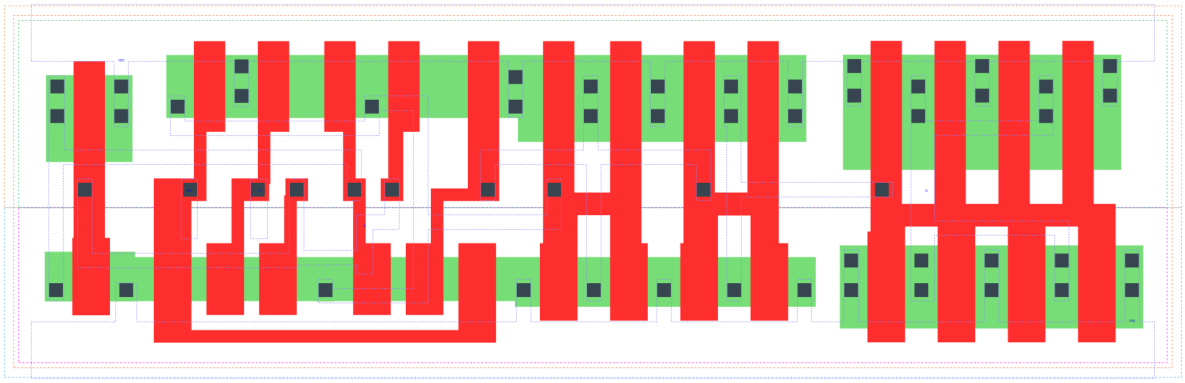

LATRNQ_X4 is a positive D-latch with active low reset and 4X drive strength

Attributes

Attribute	Value
area	90.316800 μm^2

TRUTH TABLE

Input			Output
RN	D	E	Q
H	L	H	L
H	H	H	H
H	X	L	Q
L	X	X	L

FUNCTIONAL SCHEMATIC

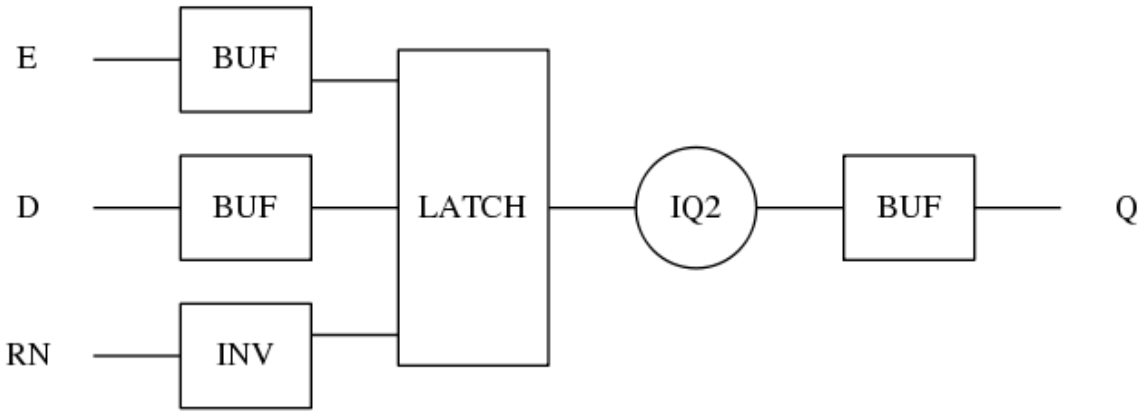

CONSTRAINTS

Constraint Pin	Related Pin	setup(ns)	hold(ns)
D(HL)	E(HL)	0.4240	-0.3780
D(LH)	E(HL)	0.4010	-0.3430

Constraint Pin	Related Pin	recovery(ns)	removal(ns)
RN(LH)	E(HL)	0.4120	-0.3610

Constraint Pin	Related Pin	Minimum Pulse Width(ns)
E(LHL)	E(LH)	0.4760
E(LHL)	E(LH)	0.3580
RN(HLH)	RN(HL)	0.3100
RN(HLH)	RN(HL)	0.3100

PIN CAPACITANCE (pf)

Pin	Type	Capacitance (pf)
E	input	0.0103
RN	input	0.0064
D	input	0.0042

DELAY AND OUTPUT TRANSITION TIME corresponding to min slew and load

Input Pin	Output	When Condition	Tin (ns)	Out Load (pf)	Delay (ns)	Tout (ns)
E(LH)	Q(LH)	D&RN	0.0100	0.0010	0.5502	0.0271
E(LH)	Q(HL)	!D&RN	0.0100	0.0010	0.6979	0.0272
RN(HL)	Q(HL)	!D&!E	0.0100	0.0010	0.4999	0.0270
RN(HL)	Q(HL)	D&!E	0.0100	0.0010	0.5000	0.0269
RN(HL)	Q(HL)	D&E	0.0100	0.0010	0.5023	0.0270
RN(LH)	Q(LH)	D&E	0.0100	0.0010	0.6133	0.0271
D(LH)	Q(LH)	E&RN	0.0100	0.0010	0.6014	0.0271
D(HL)	Q(HL)	E&RN	0.0100	0.0010	0.6737	0.0272

DYNAMIC ENERGY

Input Pin	When Condition	Tin (ns)	Output	Out Load (pf)	Energy (uW/MHz)
E	D&RN	0.0100	Q(LH)	0.0010	1.1559
RN	!D&!E	0.0100	Q(HL)	0.0010	1.3499
RN	D&!E	0.0100	Q(HL)	0.0010	1.3518
RN	D&E	0.0100	Q(HL)	0.0010	1.4169
E	!D&RN	0.0100	Q(HL)	0.0010	1.4041
RN	D&E	0.0100	Q(LH)	0.0010	1.1552
D	E&RN	0.0100	Q(LH)	0.0010	1.1531
D	E&RN	0.0100	Q(HL)	0.0010	1.4482
D(HL)	!E&!RN	0.0100	n/a	n/a	0.0427
D(HL)	E&!RN	0.0100	n/a	n/a	0.0358
D(HL)	!E&RN	0.0100	n/a	n/a	0.0349
E(LH)	!D&!RN	0.0100	n/a	n/a	0.0096
E(LH)	D&!RN	0.0100	n/a	n/a	0.0430
E(LH)	!D&RN	0.0100	n/a	n/a	-0.0019
E(LH)	D&RN	0.0100	n/a	n/a	-0.0027
D(LH)	!E&!RN	0.0100	n/a	n/a	-0.0315
D(LH)	E&!RN	0.0100	n/a	n/a	-0.0258
D(LH)	!E&RN	0.0100	n/a	n/a	-0.0314
RN(HL)	!D&!E	0.0100	n/a	n/a	0.0349
RN(HL)	D&!E	0.0100	n/a	n/a	0.0379
RN(HL)	!D&E	0.0100	n/a	n/a	0.0347
RN(LH)	!D&!E	0.0100	n/a	n/a	-0.0321
RN(LH)	!D&E	0.0100	n/a	n/a	-0.0321
RN(LH)	D&!E	0.0100	n/a	n/a	-0.0321
E(HL)	!D&!RN	0.0100	n/a	n/a	0.2058
E(HL)	!D&RN	0.0100	n/a	n/a	0.2058
E(HL)	D&!RN	0.0100	n/a	n/a	0.2065
E(HL)	D&RN	0.0100	n/a	n/a	0.2135

LEAKAGE POWER

When Condition	Power (nW)
!D&!E&!RN	0.3774
!D&E&!RN	0.3786
!D&E&RN	0.3787
D&!E&!RN	0.3775
D&E&!RN	0.4180
!D&!E&RN	0.4265
D&!E&RN	0.5018
D&E&RN	0.3978

gf180mcu_fd_sc_mcu9t5v0__latrsnq_1

gf180mcu_fd_sc_mcu9t5v0__latrsnq_1 symbol

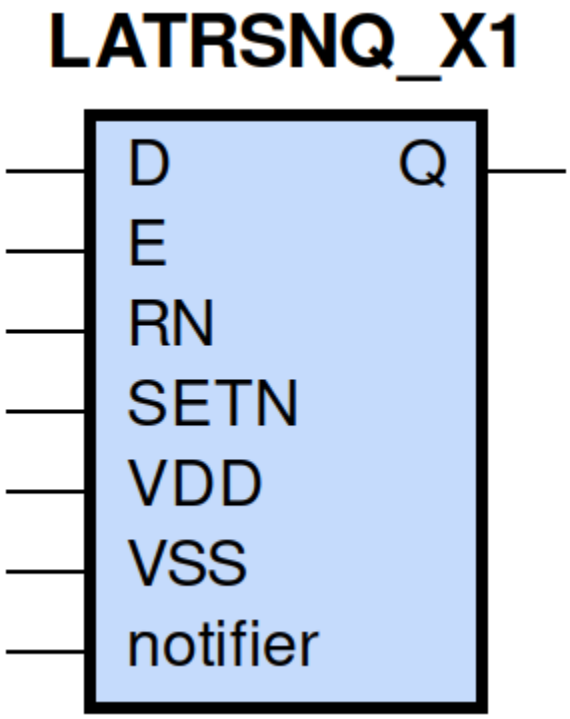

gf180mcu_fd_sc_mcu9t5v0__latrsnq_1 schematic

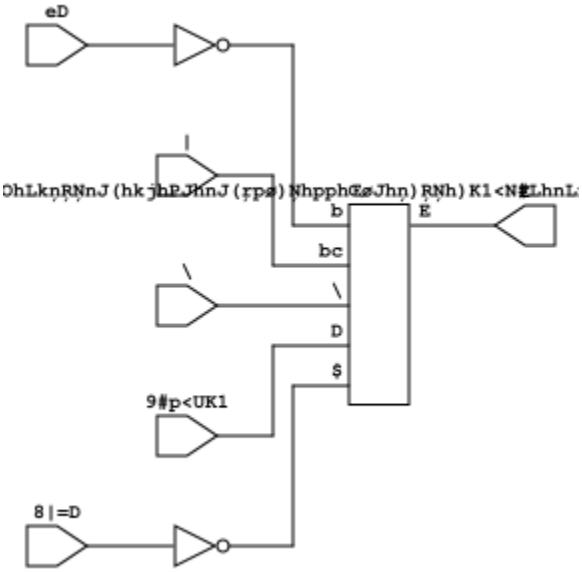

gf180mcu_fd_sc_mcu9t5v0__latrsnq_1 layout

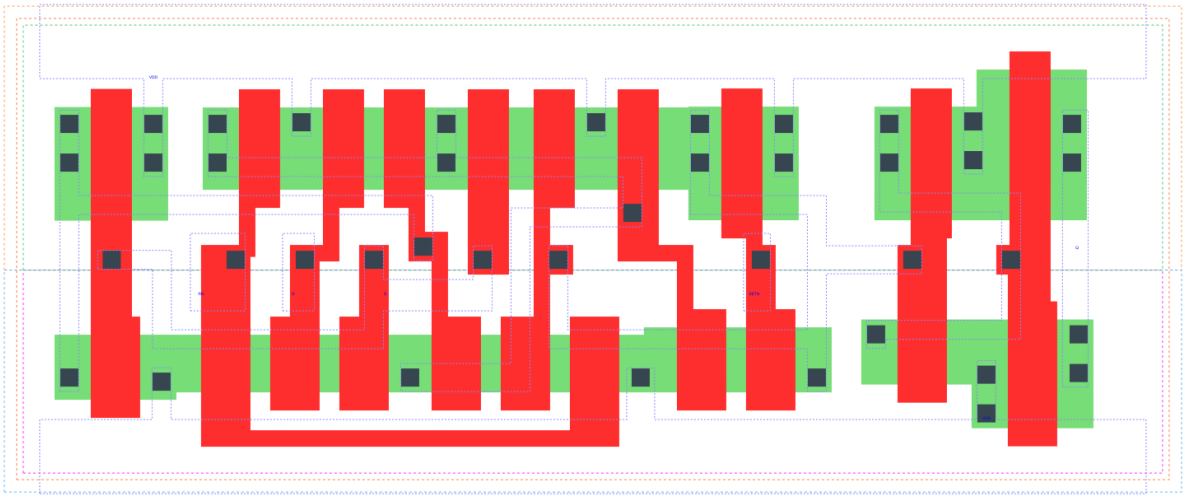

LATRSNQ_X1 is a positive D-latch with active low set/reset and 1X drive strength

Attributes

Attribute	Value
area	67.737600 μm^2

TRUTH TABLE

Input				Output
RN	SETN	D	E	Q
H	H	L	H	L
H	H	H	H	H
H	H	X	L	Q
L	H	X	X	L
H	L	X	X	H
L	L	X	X	H

FUNCTIONAL SCHEMATIC

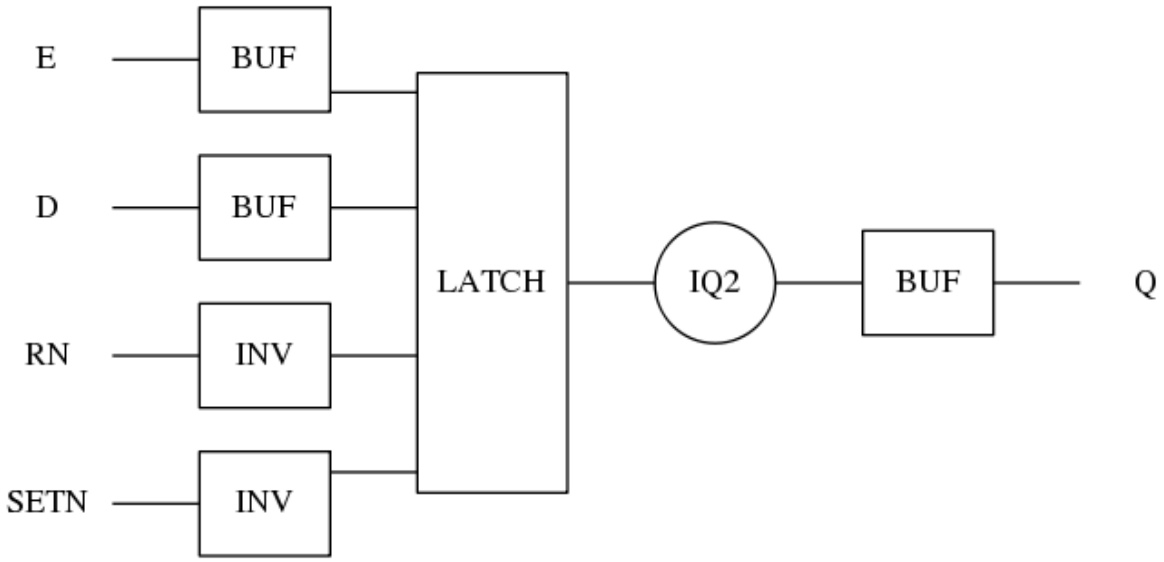

CONSTRAINTS

Constraint Pin	Related Pin	setup(ns)	hold(ns)
RN(LH)	SETN(LH)	0.0800	-0.0230
RN(LH)	SETN(LH)	0.0800	-0.0230
D(HL)	E(HL)	0.3550	-0.3030
D(LH)	E(HL)	0.3660	-0.3150
SETN(LH)	RN(LH)	-0.0230	0.0800
SETN(LH)	RN(LH)	-0.0230	0.0800

Constraint Pin	Related Pin	recovery(ns)	removal(ns)
RN(LH)	E(HL)	0.3780	-0.3260
SETN(LH)	E(HL)	-0.0060	0.1090

Constraint Pin	Related Pin	Minimum Pulse Width(ns)
E(LHL)	E(LH)	0.4070
E(LHL)	E(LH)	0.3190
RN(HLH)	RN(HL)	0.2710
RN(HLH)	RN(HL)	0.2710
SETN(HLH)	SETN(HL)	0.2410
SETN(HLH)	SETN(HL)	0.2410

PIN CAPACITANCE (pf)

Pin	Type	Capacitance (pf)
E	input	0.0102
RN	input	0.0066
D	input	0.0041
SETN	input	0.0051

DELAY AND OUTPUT TRANSITION TIME corresponding to min slew and load

Input Pin	Output	When Condition	Tin (ns)	Out Load (pf)	Delay (ns)	Tout (ns)
E(LH)	Q(LH)	D&RN&SETN	0.0100	0.0010	0.5593	0.0338
E(LH)	Q(HL)	!D&RN&SETN	0.0100	0.0010	0.6447	0.0289
RN(HL)	Q(HL)	!D&!E&SETN	0.0100	0.0010	0.4940	0.0286
RN(HL)	Q(HL)	D&!E&SETN	0.0100	0.0010	0.4942	0.0286
RN(HL)	Q(HL)	D&E&SETN	0.0100	0.0010	0.4924	0.0288
RN(LH)	Q(LH)	D&E&SETN	0.0100	0.0010	0.6198	0.0337
D(LH)	Q(LH)	E&RN&SETN	0.0100	0.0010	0.6082	0.0338
D(HL)	Q(HL)	E&RN&SETN	0.0100	0.0010	0.6136	0.0289
SETN(LH)	Q(HL)	!D&!E&!RN	0.0100	0.0010	0.2901	0.0285
SETN(LH)	Q(HL)	!D&E&!RN	0.0100	0.0010	0.2963	0.0285
SETN(LH)	Q(HL)	!D&E&RN	0.0100	0.0010	0.2985	0.0285
SETN(LH)	Q(HL)	D&!E&!RN	0.0100	0.0010	0.2901	0.0284
SETN(LH)	Q(HL)	D&E&!RN	0.0100	0.0010	0.2963	0.0285
SETN(HL)	Q(LH)	!D&!E&RN	0.0100	0.0010	0.2716	0.0327
SETN(HL)	Q(LH)	D&!E&RN	0.0100	0.0010	0.2717	0.0327
SETN(HL)	Q(LH)	!D&!E&!RN	0.0100	0.0010	0.2670	0.0326
SETN(HL)	Q(LH)	!D&E&!RN	0.0100	0.0010	0.2683	0.0326
SETN(HL)	Q(LH)	!D&E&RN	0.0100	0.0010	0.2720	0.0327
SETN(HL)	Q(LH)	D&!E&!RN	0.0100	0.0010	0.2670	0.0326
SETN(HL)	Q(LH)	D&E&!RN	0.0100	0.0010	0.2686	0.0327

DYNAMIC ENERGY

Input Pin	When Condition	Tin (ns)	Output	Out Load (pf)	Energy (uW/MHz)
SETN	!D&!E&!RN	0.0100	Q(HL)	0.0010	0.3245
SETN	!D&E&!RN	0.0100	Q(HL)	0.0010	0.3392
SETN	!D&E&RN	0.0100	Q(HL)	0.0010	0.3230
SETN	D&!E&!RN	0.0100	Q(HL)	0.0010	0.3243
SETN	D&E&!RN	0.0100	Q(HL)	0.0010	0.3393

continues on next page

Table 205 – continued from previous page

SETN	!D&!E&RN	0.0100	Q(LH)	0.0010	0.5739
SETN	D&!E&RN	0.0100	Q(LH)	0.0010	0.5739
SETN	!D&!E&!RN	0.0100	Q(LH)	0.0010	0.4266
SETN	!D&E&!RN	0.0100	Q(LH)	0.0010	0.4277
SETN	!D&E&RN	0.0100	Q(LH)	0.0010	0.4395
SETN	D&!E&!RN	0.0100	Q(LH)	0.0010	0.4266
SETN	D&E&!RN	0.0100	Q(LH)	0.0010	0.4280
E	D&RN&SETN	0.0100	Q(LH)	0.0010	0.5393
RN	!D&!E&SETN	0.0100	Q(HL)	0.0010	0.6267
RN	D&!E&SETN	0.0100	Q(HL)	0.0010	0.6296
RN	D&E&SETN	0.0100	Q(HL)	0.0010	0.6848
E	!D&RN&SETN	0.0100	Q(HL)	0.0010	0.6036
RN	D&E&SETN	0.0100	Q(LH)	0.0010	0.5353
D	E&RN&SETN	0.0100	Q(LH)	0.0010	0.5341
D	E&RN&SETN	0.0100	Q(HL)	0.0010	0.6454
SETN(HL)	!D&!E&RN	0.0100	n/a	n/a	0.0491
SETN(HL)	D&!E&RN	0.0100	n/a	n/a	0.0491
SETN(HL)	D&E&RN	0.0100	n/a	n/a	0.0490
D(HL)	!E&!RN&!SETN	0.0100	n/a	n/a	0.0426
D(HL)	!E&RN&!SETN	0.0100	n/a	n/a	0.0320
D(HL)	E&!RN&!SETN	0.0100	n/a	n/a	0.0357
D(HL)	E&RN&!SETN	0.0100	n/a	n/a	0.2529
D(HL)	!E&!RN&SETN	0.0100	n/a	n/a	0.0426
D(HL)	E&!RN&SETN	0.0100	n/a	n/a	0.0357
D(HL)	!E&RN&SETN	0.0100	n/a	n/a	0.0343
E(LH)	!D&!RN&!SETN	0.0100	n/a	n/a	0.0113
E(LH)	!D&RN&!SETN	0.0100	n/a	n/a	0.2058
E(LH)	D&!RN&!SETN	0.0100	n/a	n/a	0.0447
E(LH)	D&RN&!SETN	0.0100	n/a	n/a	0.0060
E(LH)	!D&!RN&SETN	0.0100	n/a	n/a	0.0094
E(LH)	D&!RN&SETN	0.0100	n/a	n/a	0.0428
E(LH)	!D&RN&SETN	0.0100	n/a	n/a	-0.0019
E(LH)	D&RN&SETN	0.0100	n/a	n/a	-0.0028
D(LH)	!E&!RN&!SETN	0.0100	n/a	n/a	-0.0315
D(LH)	!E&RN&!SETN	0.0100	n/a	n/a	-0.0275
D(LH)	E&!RN&!SETN	0.0100	n/a	n/a	-0.0259
D(LH)	E&RN&!SETN	0.0100	n/a	n/a	0.0684
D(LH)	!E&!RN&SETN	0.0100	n/a	n/a	-0.0315
D(LH)	E&!RN&SETN	0.0100	n/a	n/a	-0.0259
D(LH)	!E&RN&SETN	0.0100	n/a	n/a	-0.0315
RN(HL)	!D&!E&!SETN	0.0100	n/a	n/a	0.2341
RN(HL)	!D&E&!SETN	0.0100	n/a	n/a	0.0393
RN(HL)	D&!E&!SETN	0.0100	n/a	n/a	0.2369
RN(HL)	D&E&!SETN	0.0100	n/a	n/a	0.2869
RN(HL)	!D&!E&SETN	0.0100	n/a	n/a	0.0349
RN(HL)	D&!E&SETN	0.0100	n/a	n/a	0.0379
RN(HL)	!D&E&SETN	0.0100	n/a	n/a	0.0347
RN(LH)	!D&!E&!SETN	0.0100	n/a	n/a	0.1200
RN(LH)	!D&E&!SETN	0.0100	n/a	n/a	-0.0319
RN(LH)	D&!E&!SETN	0.0100	n/a	n/a	0.1200
RN(LH)	D&E&!SETN	0.0100	n/a	n/a	0.0699
RN(LH)	!D&!E&SETN	0.0100	n/a	n/a	-0.0321

continues on next page

Table 205 – continued from previous page

RN(LH)	!D&E&SETN	0.0100	n/a	n/a	-0.0321
RN(LH)	D&!E&SETN	0.0100	n/a	n/a	-0.0321
SETN(LH)	!D&!E&RN	0.0100	n/a	n/a	-0.0360
SETN(LH)	D&!E&RN	0.0100	n/a	n/a	-0.0360
SETN(LH)	D&E&RN	0.0100	n/a	n/a	-0.0360
E(HL)	!D&!RN&!SETN	0.0100	n/a	n/a	0.2179
E(HL)	!D&RN&!SETN	0.0100	n/a	n/a	0.3088
E(HL)	D&!RN&!SETN	0.0100	n/a	n/a	0.2183
E(HL)	D&RN&!SETN	0.0100	n/a	n/a	0.2051
E(HL)	D&RN&SETN	0.0100	n/a	n/a	0.2051
E(HL)	!D&!RN&SETN	0.0100	n/a	n/a	0.2048
E(HL)	!D&RN&SETN	0.0100	n/a	n/a	0.2047
E(HL)	D&!RN&SETN	0.0100	n/a	n/a	0.2052

LEAKAGE POWER

When Condition	Power (nW)
!D&!E&!RN&!SETN	0.2829
!D&!E&RN&!SETN	0.2676
!D&E&!RN&!SETN	0.2447
!D&E&RN&!SETN	0.2451
D&!E&!RN&!SETN	0.2830
D&!E&RN&!SETN	0.2676
D&E&!RN&!SETN	0.2841
D&E&RN&!SETN	0.2688
D&E&RN&SETN	0.3089
!D&!E&!RN&SETN	0.2712
!D&E&!RN&SETN	0.2723
!D&E&RN&SETN	0.2725
D&!E&!RN&SETN	0.2712
D&E&!RN&SETN	0.3117
!D&!E&RN&SETN	0.3206
D&!E&RN&SETN	0.3750

gf180mcu_fd_sc_mcu9t5v0__latrsnq_2

gf180mcu_fd_sc_mcu9t5v0__latrsnq_2 symbol

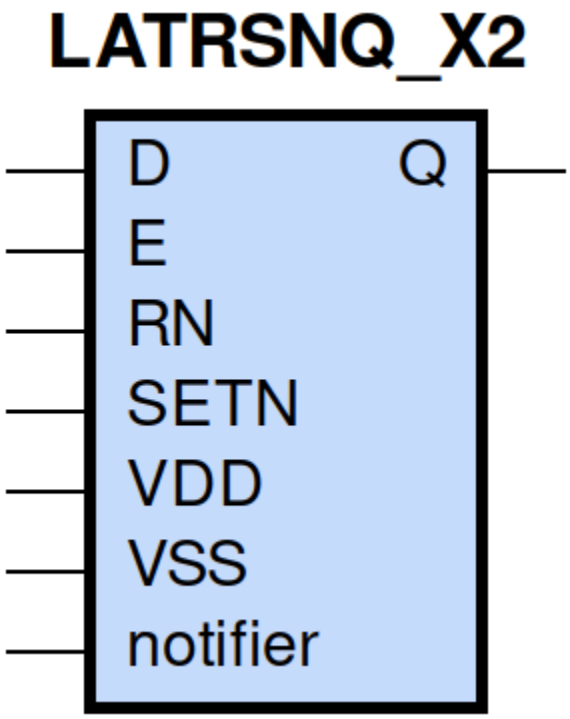

gf180mcu_fd_sc_mcu9t5v0__latrsnq_2 schematic

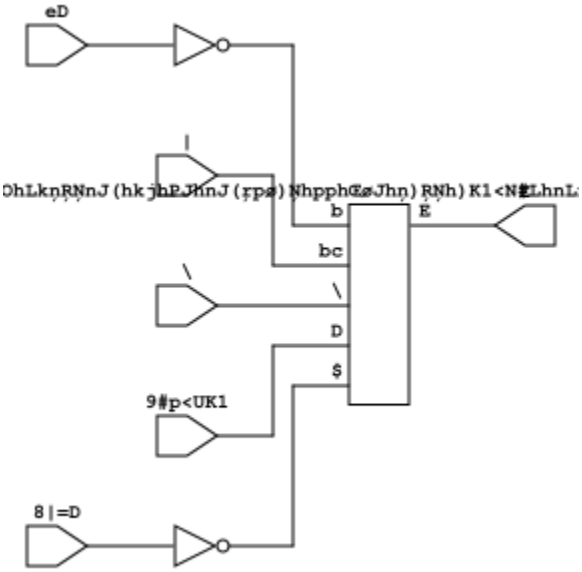

gf180mcu_fd_sc_mcu9t5v0__latrsnq_2 layout

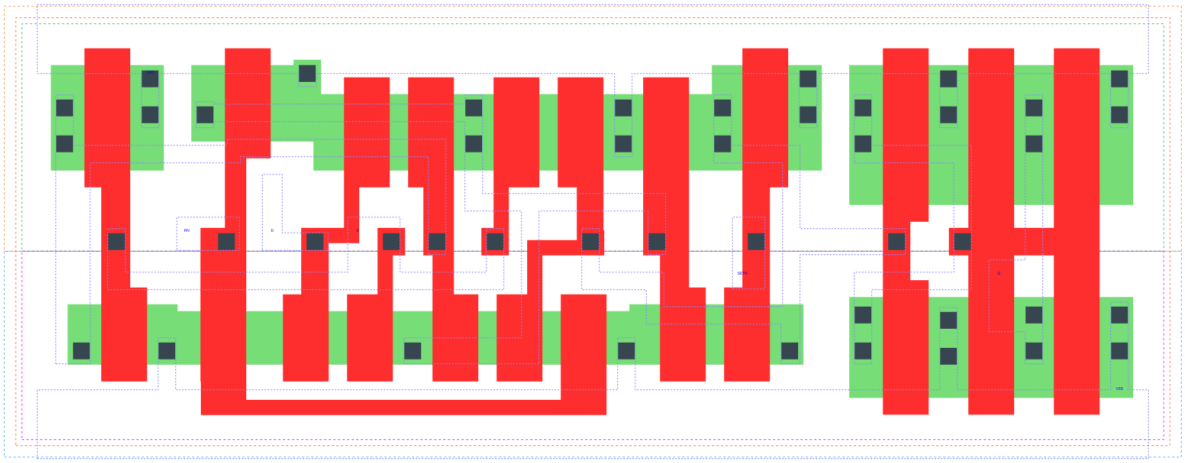

LATRSNQ_X2 is a positive D-latch with active low set/reset and 2X drive strength

Attributes

Attribute	Value
area	73.382400 μm^2

TRUTH TABLE

Input				Output
RN	SETN	D	E	Q
H	H	L	H	L
H	H	H	H	H
H	H	X	L	Q
L	H	X	X	L
H	L	X	X	H
L	L	X	X	H

FUNCTIONAL SCHEMATIC

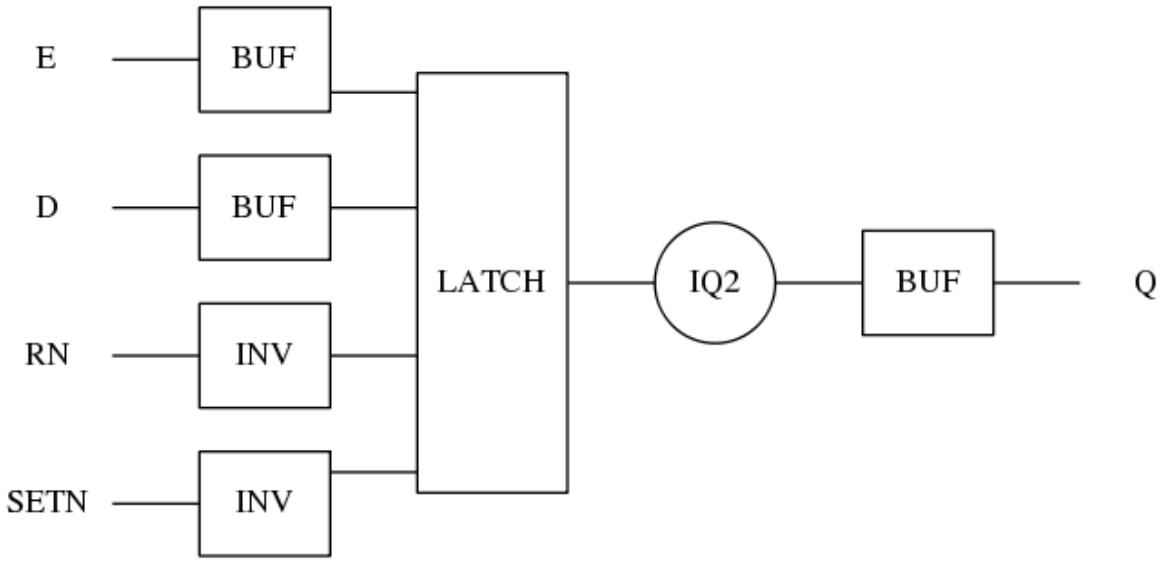

CONSTRAINTS

Constraint Pin	Related Pin	setup(ns)	hold(ns)
RN(LH)	SETN(LH)	0.0740	-0.0000
RN(LH)	SETN(LH)	0.0740	-0.0000
D(HL)	E(HL)	0.4410	-0.3780
D(LH)	E(HL)	0.4180	-0.3490
SETN(LH)	RN(LH)	0.0000	0.0740
SETN(LH)	RN(LH)	0.0000	0.0740

Constraint Pin	Related Pin	recovery(ns)	removal(ns)
RN(LH)	E(HL)	0.4290	-0.3610
SETN(LH)	E(HL)	0.0110	0.1200

Constraint Pin	Related Pin	Minimum Pulse Width(ns)
E(LHL)	E(LH)	0.4850
E(LHL)	E(LH)	0.3680
RN(HLH)	RN(HL)	0.3290
RN(HLH)	RN(HL)	0.3290
SETN(HLH)	SETN(HL)	0.2800
SETN(HLH)	SETN(HL)	0.2800

PIN CAPACITANCE (pf)

Pin	Type	Capacitance (pf)
E	input	0.0108
RN	input	0.0066
D	input	0.0044
SETN	input	0.0055

DELAY AND OUTPUT TRANSITION TIME corresponding to min slew and load

Input Pin	Output	When Condition	Tin (ns)	Out Load (pf)	Delay (ns)	Tout (ns)
E(LH)	Q(LH)	D&RN&SETN	0.0100	0.0010	0.6405	0.0304
E(LH)	Q(HL)	!D&RN&SETN	0.0100	0.0010	0.7842	0.0299
RN(HL)	Q(HL)	!D&!E&SETN	0.0100	0.0010	0.6046	0.0296
RN(HL)	Q(HL)	D&!E&SETN	0.0100	0.0010	0.6047	0.0296
RN(HL)	Q(HL)	D&E&SETN	0.0100	0.0010	0.6068	0.0299
RN(LH)	Q(LH)	D&E&SETN	0.0100	0.0010	0.7064	0.0304
D(LH)	Q(LH)	E&RN&SETN	0.0100	0.0010	0.6931	0.0304
D(HL)	Q(HL)	E&RN&SETN	0.0100	0.0010	0.7572	0.0299
SETN(LH)	Q(HL)	!D&!E&!RN	0.0100	0.0010	0.3605	0.0294
SETN(LH)	Q(HL)	!D&E&!RN	0.0100	0.0010	0.3675	0.0296
SETN(LH)	Q(HL)	!D&E&RN	0.0100	0.0010	0.3694	0.0297
SETN(LH)	Q(HL)	D&!E&!RN	0.0100	0.0010	0.3605	0.0294
SETN(LH)	Q(HL)	D&E&!RN	0.0100	0.0010	0.3674	0.0296
SETN(HL)	Q(LH)	!D&!E&RN	0.0100	0.0010	0.3238	0.0289
SETN(HL)	Q(LH)	D&!E&RN	0.0100	0.0010	0.3238	0.0290
SETN(HL)	Q(LH)	!D&!E&!RN	0.0100	0.0010	0.3183	0.0290
SETN(HL)	Q(LH)	!D&E&!RN	0.0100	0.0010	0.3201	0.0291
SETN(HL)	Q(LH)	!D&E&RN	0.0100	0.0010	0.3242	0.0291
SETN(HL)	Q(LH)	D&!E&!RN	0.0100	0.0010	0.3183	0.0290
SETN(HL)	Q(LH)	D&E&!RN	0.0100	0.0010	0.3201	0.0291

DYNAMIC ENERGY

Input Pin	When Condition	Tin (ns)	Output	Out Load (pf)	Energy (uW/MHz)
SETN	!D&!E&!RN	0.0100	Q(HL)	0.0010	0.5475
SETN	!D&E&!RN	0.0100	Q(HL)	0.0010	0.5638
SETN	!D&E&RN	0.0100	Q(HL)	0.0010	0.5466
SETN	D&!E&!RN	0.0100	Q(HL)	0.0010	0.5475
SETN	D&E&!RN	0.0100	Q(HL)	0.0010	0.5637

continues on next page

Table 206 – continued from previous page

SETN	!D&!E&RN	0.0100	Q(LH)	0.0010	0.7767
SETN	D&!E&RN	0.0100	Q(LH)	0.0010	0.7766
SETN	!D&!E&!RN	0.0100	Q(LH)	0.0010	0.6216
SETN	!D&E&!RN	0.0100	Q(LH)	0.0010	0.6238
SETN	!D&E&RN	0.0100	Q(LH)	0.0010	0.6360
SETN	D&!E&!RN	0.0100	Q(LH)	0.0010	0.6216
SETN	D&E&!RN	0.0100	Q(LH)	0.0010	0.6238
E	D&RN&SETN	0.0100	Q(LH)	0.0010	0.7450
RN	!D&!E&SETN	0.0100	Q(HL)	0.0010	0.8696
RN	D&!E&SETN	0.0100	Q(HL)	0.0010	0.8719
RN	D&E&SETN	0.0100	Q(HL)	0.0010	0.9326
E	!D&RN&SETN	0.0100	Q(HL)	0.0010	0.8428
RN	D&E&SETN	0.0100	Q(LH)	0.0010	0.7436
D	E&RN&SETN	0.0100	Q(LH)	0.0010	0.7420
D	E&RN&SETN	0.0100	Q(HL)	0.0010	0.8915
SETN(HL)	!D&!E&RN	0.0100	n/a	n/a	0.0546
SETN(HL)	D&!E&RN	0.0100	n/a	n/a	0.0546
SETN(HL)	D&E&RN	0.0100	n/a	n/a	0.0546
D(HL)	!E&!RN&!SETN	0.0100	n/a	n/a	0.0467
D(HL)	!E&RN&!SETN	0.0100	n/a	n/a	0.0360
D(HL)	E&!RN&!SETN	0.0100	n/a	n/a	0.0397
D(HL)	E&RN&!SETN	0.0100	n/a	n/a	0.2638
D(HL)	!E&!RN&SETN	0.0100	n/a	n/a	0.0467
D(HL)	E&!RN&SETN	0.0100	n/a	n/a	0.0397
D(HL)	!E&RN&SETN	0.0100	n/a	n/a	0.0382
E(LH)	!D&!RN&!SETN	0.0100	n/a	n/a	0.0087
E(LH)	!D&RN&!SETN	0.0100	n/a	n/a	0.2103
E(LH)	D&!RN&!SETN	0.0100	n/a	n/a	0.0456
E(LH)	D&RN&!SETN	0.0100	n/a	n/a	0.0031
E(LH)	!D&!RN&SETN	0.0100	n/a	n/a	0.0068
E(LH)	D&!RN&SETN	0.0100	n/a	n/a	0.0436
E(LH)	!D&RN&SETN	0.0100	n/a	n/a	-0.0047
E(LH)	D&RN&SETN	0.0100	n/a	n/a	-0.0055
D(LH)	!E&!RN&!SETN	0.0100	n/a	n/a	-0.0356
D(LH)	!E&RN&!SETN	0.0100	n/a	n/a	-0.0316
D(LH)	E&!RN&!SETN	0.0100	n/a	n/a	-0.0264
D(LH)	E&RN&!SETN	0.0100	n/a	n/a	0.0711
D(LH)	!E&!RN&SETN	0.0100	n/a	n/a	-0.0356
D(LH)	E&!RN&SETN	0.0100	n/a	n/a	-0.0264
D(LH)	!E&RN&SETN	0.0100	n/a	n/a	-0.0355
RN(HL)	!D&!E&!SETN	0.0100	n/a	n/a	0.2449
RN(HL)	!D&E&!SETN	0.0100	n/a	n/a	0.0434
RN(HL)	D&!E&!SETN	0.0100	n/a	n/a	0.2476
RN(HL)	D&E&!SETN	0.0100	n/a	n/a	0.3016
RN(HL)	!D&!E&SETN	0.0100	n/a	n/a	0.0389
RN(HL)	D&!E&SETN	0.0100	n/a	n/a	0.0417
RN(HL)	!D&E&SETN	0.0100	n/a	n/a	0.0388
RN(LH)	!D&!E&!SETN	0.0100	n/a	n/a	0.1217
RN(LH)	!D&E&!SETN	0.0100	n/a	n/a	-0.0359
RN(LH)	D&!E&!SETN	0.0100	n/a	n/a	0.1217
RN(LH)	D&E&!SETN	0.0100	n/a	n/a	0.0726
RN(LH)	!D&!E&SETN	0.0100	n/a	n/a	-0.0361

continues on next page

Table 206 – continued from previous page

RN(LH)	!D&E&SETN	0.0100	n/a	n/a	-0.0361
RN(LH)	D&!E&SETN	0.0100	n/a	n/a	-0.0361
SETN(LH)	!D&!E&RN	0.0100	n/a	n/a	-0.0416
SETN(LH)	D&!E&RN	0.0100	n/a	n/a	-0.0416
SETN(LH)	D&E&RN	0.0100	n/a	n/a	-0.0416
E(HL)	!D&!RN&!SETN	0.0100	n/a	n/a	0.2350
E(HL)	!D&RN&!SETN	0.0100	n/a	n/a	0.3294
E(HL)	D&!RN&!SETN	0.0100	n/a	n/a	0.2355
E(HL)	D&RN&!SETN	0.0100	n/a	n/a	0.2184
E(HL)	D&RN&SETN	0.0100	n/a	n/a	0.2184
E(HL)	!D&!RN&SETN	0.0100	n/a	n/a	0.2220
E(HL)	!D&RN&SETN	0.0100	n/a	n/a	0.2219
E(HL)	D&!RN&SETN	0.0100	n/a	n/a	0.2225

LEAKAGE POWER

When Condition	Power (nW)
!D&!E&!RN&!SETN	0.3086
!D&!E&RN&!SETN	0.2923
!D&E&!RN&!SETN	0.2703
!D&E&RN&!SETN	0.2706
D&!E&!RN&!SETN	0.3087
D&!E&RN&!SETN	0.2923
D&E&!RN&!SETN	0.3097
D&E&RN&!SETN	0.2933
D&E&RN&SETN	0.3334
!D&!E&!RN&SETN	0.2975
!D&E&!RN&SETN	0.2985
!D&E&RN&SETN	0.2987
D&!E&!RN&SETN	0.2976
D&E&!RN&SETN	0.3379
!D&!E&RN&SETN	0.3470
D&!E&RN&SETN	0.3963

gf180mcu_fd_sc_mcu9t5v0__latrsnq_4

gf180mcu_fd_sc_mcu9t5v0__latrsnq_4 symbol

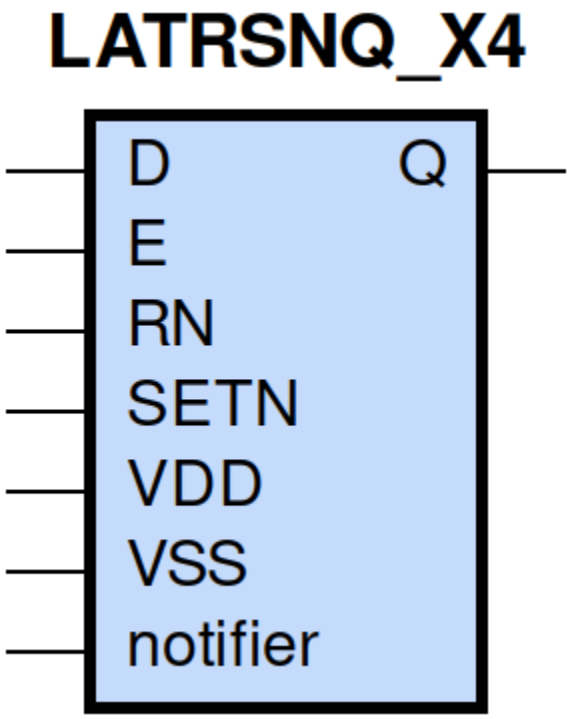

gf180mcu_fd_sc_mcu9t5v0__latrsnq_4 schematic

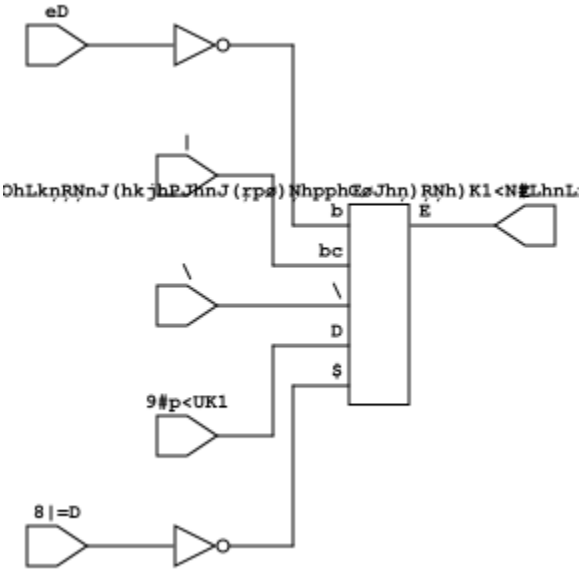

gf180mcu_fd_sc_mcu9t5v0__latrsnq_4 layout

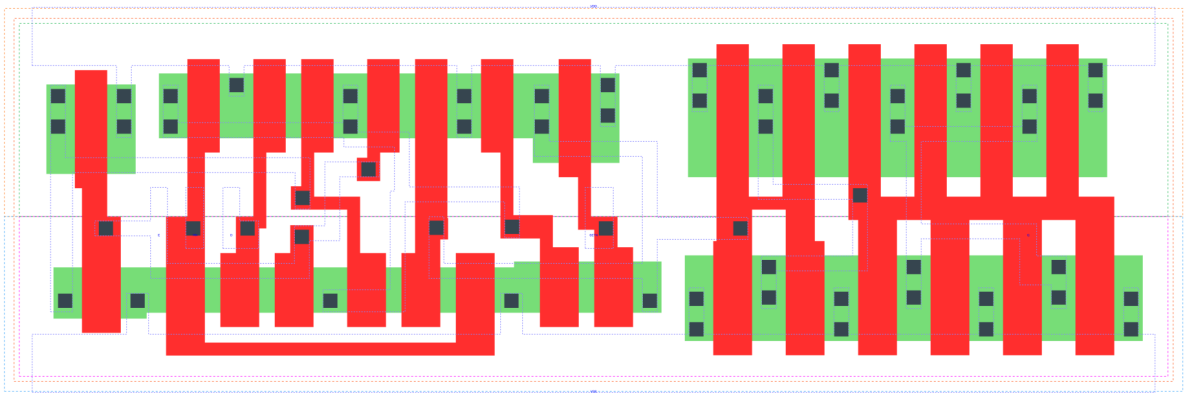

LATRSNQ_X4 is a positive D-latch with active low set/reset and 4X drive strength

Attributes

Attribute	Value
area	87.494400 μm^2

TRUTH TABLE

Input				Output
RN	SETN	D	E	Q
H	H	L	H	L
H	H	H	H	H
H	H	X	L	Q
L	H	X	X	L
H	L	X	X	H
L	L	X	X	H

FUNCTIONAL SCHEMATIC

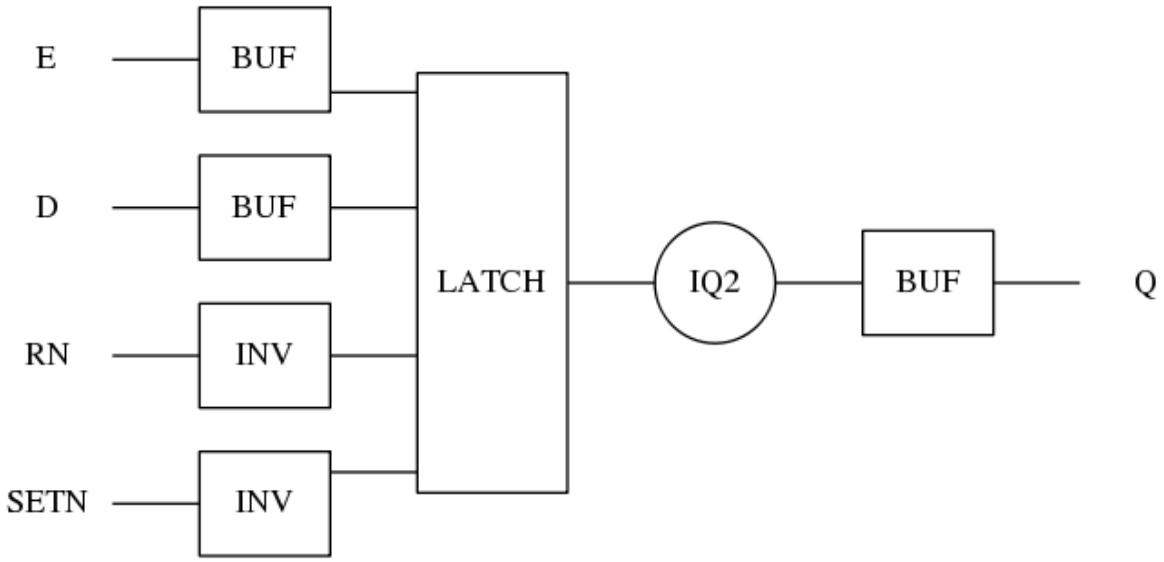

CONSTRAINTS

Constraint Pin	Related Pin	setup(ns)	hold(ns)
RN(LH)	SETN(LH)	0.0400	0.0400
RN(LH)	SETN(LH)	0.0400	0.0400
D(HL)	E(HL)	0.4060	-0.3440
D(LH)	E(HL)	0.4350	-0.3550
SETN(LH)	RN(LH)	0.0400	0.0400
SETN(LH)	RN(LH)	0.0400	0.0400

Constraint Pin	Related Pin	recovery(ns)	removal(ns)
RN(LH)	E(HL)	0.4470	-0.3660
SETN(LH)	E(HL)	0.0690	0.0570

Constraint Pin	Related Pin	Minimum Pulse Width(ns)
E(LHL)	E(LH)	0.4560
E(LHL)	E(LH)	0.3880
RN(HLH)	RN(HL)	0.3100
RN(HLH)	RN(HL)	0.3100
SETN(HLH)	SETN(HL)	0.2900
SETN(HLH)	SETN(HL)	0.2900

PIN CAPACITANCE (pf)

Pin	Type	Capacitance (pf)
E	input	0.0101
RN	input	0.0065
D	input	0.0042
SETN	input	0.0051

DELAY AND OUTPUT TRANSITION TIME corresponding to min slew and load

Input Pin	Output	When Condition	Tin (ns)	Out Load (pf)	Delay (ns)	Tout (ns)
E(LH)	Q(LH)	D&RN&SETN	0.0100	0.0010	0.6295	0.0264
E(LH)	Q(HL)	!D&RN&SETN	0.0100	0.0010	0.7399	0.0261
RN(HL)	Q(HL)	!D&!E&SETN	0.0100	0.0010	0.5882	0.0258
RN(HL)	Q(HL)	D&!E&SETN	0.0100	0.0010	0.5885	0.0258
RN(HL)	Q(HL)	D&E&SETN	0.0100	0.0010	0.5861	0.0260
RN(LH)	Q(LH)	D&E&SETN	0.0100	0.0010	0.6900	0.0264
D(LH)	Q(LH)	E&RN&SETN	0.0100	0.0010	0.6781	0.0265
D(HL)	Q(HL)	E&RN&SETN	0.0100	0.0010	0.7093	0.0262
SETN(LH)	Q(HL)	!D&!E&!RN	0.0100	0.0010	0.3824	0.0257
SETN(LH)	Q(HL)	!D&E&!RN	0.0100	0.0010	0.3890	0.0260
SETN(LH)	Q(HL)	!D&E&RN	0.0100	0.0010	0.3910	0.0259
SETN(LH)	Q(HL)	D&!E&!RN	0.0100	0.0010	0.3824	0.0257
SETN(LH)	Q(HL)	D&E&!RN	0.0100	0.0010	0.3890	0.0259
SETN(HL)	Q(LH)	!D&!E&RN	0.0100	0.0010	0.3207	0.0243
SETN(HL)	Q(LH)	D&!E&RN	0.0100	0.0010	0.3208	0.0245
SETN(HL)	Q(LH)	!D&!E&!RN	0.0100	0.0010	0.3161	0.0242
SETN(HL)	Q(LH)	!D&E&!RN	0.0100	0.0010	0.3177	0.0244
SETN(HL)	Q(LH)	!D&E&RN	0.0100	0.0010	0.3211	0.0246
SETN(HL)	Q(LH)	D&!E&!RN	0.0100	0.0010	0.3161	0.0242
SETN(HL)	Q(LH)	D&E&!RN	0.0100	0.0010	0.3177	0.0243

DYNAMIC ENERGY

Input Pin	When Condition	Tin (ns)	Output	Out Load (pf)	Energy (uW/MHz)
SETN	!D&!E&!RN	0.0100	Q(HL)	0.0010	1.0230
SETN	!D&E&!RN	0.0100	Q(HL)	0.0010	1.0444
SETN	!D&E&RN	0.0100	Q(HL)	0.0010	1.0263
SETN	D&!E&!RN	0.0100	Q(HL)	0.0010	1.0225
SETN	D&E&!RN	0.0100	Q(HL)	0.0010	1.0444

continues on next page

Table 207 – continued from previous page

SETN	!D&!E&RN	0.0100	Q(LH)	0.0010	1.1943
SETN	D&!E&RN	0.0100	Q(LH)	0.0010	1.1945
SETN	!D&!E&!RN	0.0100	Q(LH)	0.0010	1.0386
SETN	!D&E&!RN	0.0100	Q(LH)	0.0010	1.0412
SETN	!D&E&RN	0.0100	Q(LH)	0.0010	1.0567
SETN	D&!E&!RN	0.0100	Q(LH)	0.0010	1.0387
SETN	D&E&!RN	0.0100	Q(LH)	0.0010	1.0416
E	D&RN&SETN	0.0100	Q(LH)	0.0010	1.2454
RN	!D&!E&SETN	0.0100	Q(HL)	0.0010	1.3277
RN	D&!E&SETN	0.0100	Q(HL)	0.0010	1.3305
RN	D&E&SETN	0.0100	Q(HL)	0.0010	1.3926
E	!D&RN&SETN	0.0100	Q(HL)	0.0010	1.3141
RN	D&E&SETN	0.0100	Q(LH)	0.0010	1.2414
D	E&RN&SETN	0.0100	Q(LH)	0.0010	1.2398
D	E&RN&SETN	0.0100	Q(HL)	0.0010	1.3565
SETN(HL)	!D&!E&RN	0.0100	n/a	n/a	0.0491
SETN(HL)	D&!E&RN	0.0100	n/a	n/a	0.0490
SETN(HL)	D&E&RN	0.0100	n/a	n/a	0.0490
D(HL)	!E&!RN&!SETN	0.0100	n/a	n/a	0.0426
D(HL)	!E&RN&!SETN	0.0100	n/a	n/a	0.0320
D(HL)	E&!RN&!SETN	0.0100	n/a	n/a	0.0358
D(HL)	E&RN&!SETN	0.0100	n/a	n/a	0.2515
D(HL)	!E&!RN&SETN	0.0100	n/a	n/a	0.0426
D(HL)	E&!RN&SETN	0.0100	n/a	n/a	0.0358
D(HL)	!E&RN&SETN	0.0100	n/a	n/a	0.0343
E(LH)	!D&!RN&!SETN	0.0100	n/a	n/a	0.0112
E(LH)	!D&RN&!SETN	0.0100	n/a	n/a	0.2042
E(LH)	D&!RN&!SETN	0.0100	n/a	n/a	0.0446
E(LH)	D&RN&!SETN	0.0100	n/a	n/a	0.0059
E(LH)	!D&!RN&SETN	0.0100	n/a	n/a	0.0094
E(LH)	D&!RN&SETN	0.0100	n/a	n/a	0.0428
E(LH)	!D&RN&SETN	0.0100	n/a	n/a	-0.0020
E(LH)	D&RN&SETN	0.0100	n/a	n/a	-0.0027
D(LH)	!E&!RN&!SETN	0.0100	n/a	n/a	-0.0315
D(LH)	!E&RN&!SETN	0.0100	n/a	n/a	-0.0275
D(LH)	E&!RN&!SETN	0.0100	n/a	n/a	-0.0259
D(LH)	E&RN&!SETN	0.0100	n/a	n/a	0.0684
D(LH)	!E&!RN&SETN	0.0100	n/a	n/a	-0.0315
D(LH)	E&!RN&SETN	0.0100	n/a	n/a	-0.0259
D(LH)	!E&RN&SETN	0.0100	n/a	n/a	-0.0315
RN(HL)	!D&!E&!SETN	0.0100	n/a	n/a	0.2325
RN(HL)	!D&E&!SETN	0.0100	n/a	n/a	0.0393
RN(HL)	D&!E&!SETN	0.0100	n/a	n/a	0.2353
RN(HL)	D&E&!SETN	0.0100	n/a	n/a	0.2855
RN(HL)	!D&!E&SETN	0.0100	n/a	n/a	0.0350
RN(HL)	D&!E&SETN	0.0100	n/a	n/a	0.0379
RN(HL)	!D&E&SETN	0.0100	n/a	n/a	0.0347
RN(LH)	!D&!E&!SETN	0.0100	n/a	n/a	0.1190
RN(LH)	!D&E&!SETN	0.0100	n/a	n/a	-0.0320
RN(LH)	D&!E&!SETN	0.0100	n/a	n/a	0.1191
RN(LH)	D&E&!SETN	0.0100	n/a	n/a	0.0699
RN(LH)	!D&!E&SETN	0.0100	n/a	n/a	-0.0321

continues on next page

Table 207 – continued from previous page

RN(LH)	!D&E&SETN	0.0100	n/a	n/a	-0.0320
RN(LH)	D&!E&SETN	0.0100	n/a	n/a	-0.0321
SETN(LH)	!D&!E&RN	0.0100	n/a	n/a	-0.0360
SETN(LH)	D&!E&RN	0.0100	n/a	n/a	-0.0360
SETN(LH)	D&E&RN	0.0100	n/a	n/a	-0.0360
E(HL)	!D&!RN&!SETN	0.0100	n/a	n/a	0.2163
E(HL)	!D&RN&!SETN	0.0100	n/a	n/a	0.3064
E(HL)	D&!RN&!SETN	0.0100	n/a	n/a	0.2168
E(HL)	D&RN&!SETN	0.0100	n/a	n/a	0.2027
E(HL)	D&RN&SETN	0.0100	n/a	n/a	0.2027
E(HL)	!D&!RN&SETN	0.0100	n/a	n/a	0.2033
E(HL)	!D&RN&SETN	0.0100	n/a	n/a	0.2032
E(HL)	D&!RN&SETN	0.0100	n/a	n/a	0.2038

LEAKAGE POWER

When Condition	Power (nW)
!D&!E&!RN&!SETN	0.3868
!D&!E&RN&!SETN	0.3715
!D&E&!RN&!SETN	0.3486
!D&E&RN&!SETN	0.3489
D&!E&!RN&!SETN	0.3869
D&!E&RN&!SETN	0.3715
D&E&!RN&!SETN	0.3880
D&E&RN&!SETN	0.3727
D&E&RN&SETN	0.4128
!D&!E&!RN&SETN	0.3775
!D&E&!RN&SETN	0.3786
!D&E&RN&SETN	0.3788
D&!E&!RN&SETN	0.3775
D&E&!RN&SETN	0.4180
!D&!E&RN&SETN	0.4269
D&!E&RN&SETN	0.4741

gf180mcu_fd_sc_mcu9t5v0__latsnq_1

gf180mcu_fd_sc_mcu9t5v0__latsnq_1 symbol

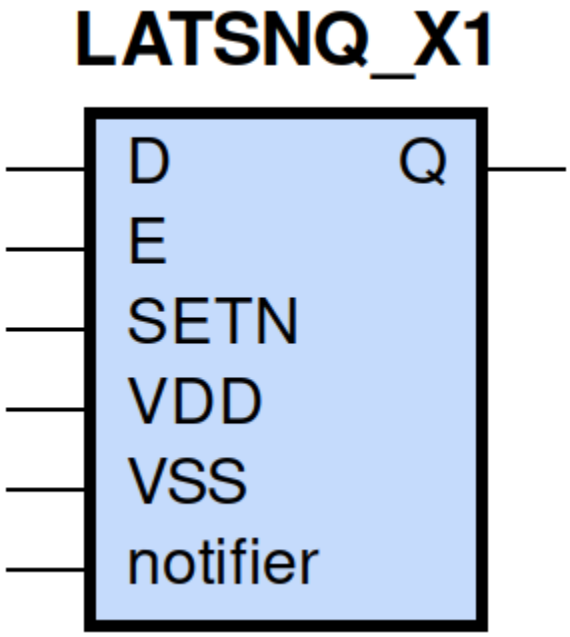

gf180mcu_fd_sc_mcu9t5v0__latsnq_1 schematic

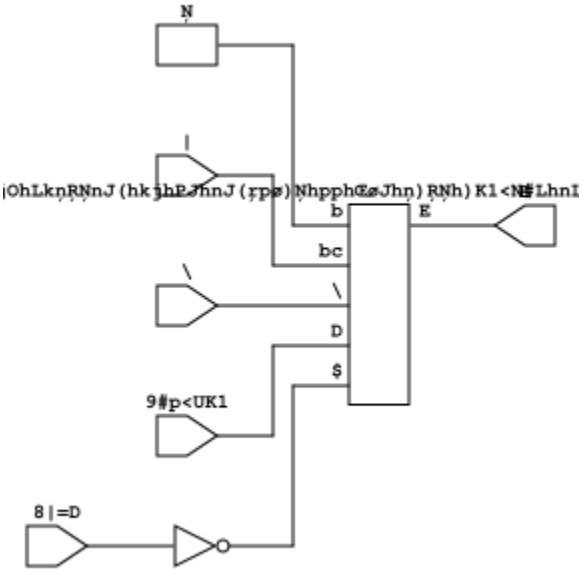

gf180mcu_fd_sc_mcu9t5v0__latsnq_1 layout

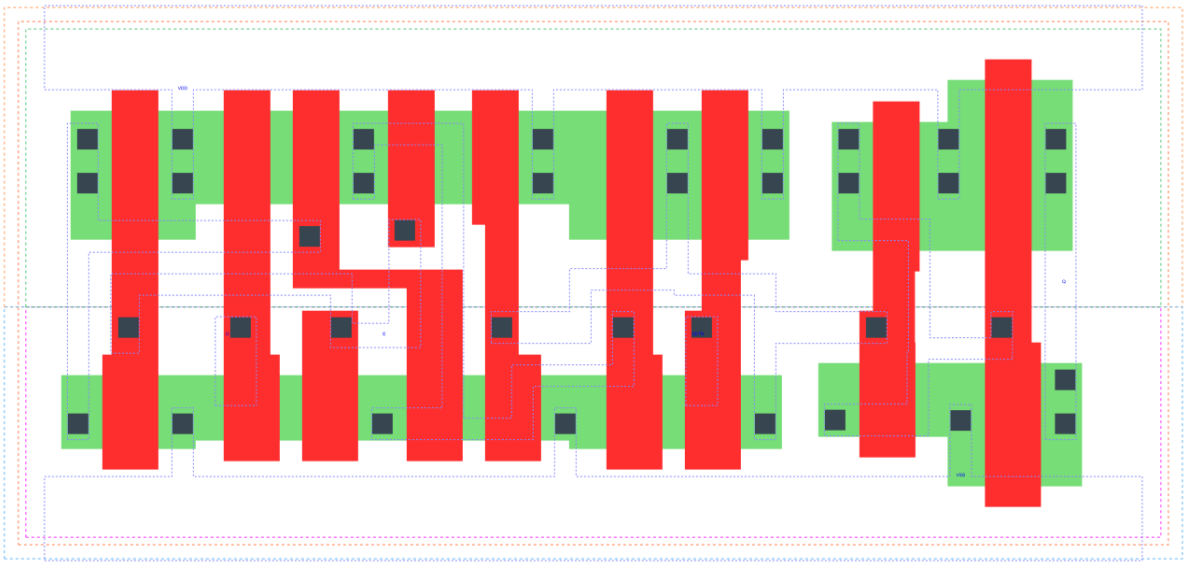

LATSNQ_X1 is a positive D-latch with active low set and 1X drive strength

Attributes

Attribute	Value
area	59.270400 μm^2

TRUTH TABLE

Input			Output
SETN	D	E	Q
H	L	H	L
H	H	H	H
H	X	L	Q
L	X	X	H

FUNCTIONAL SCHEMATIC

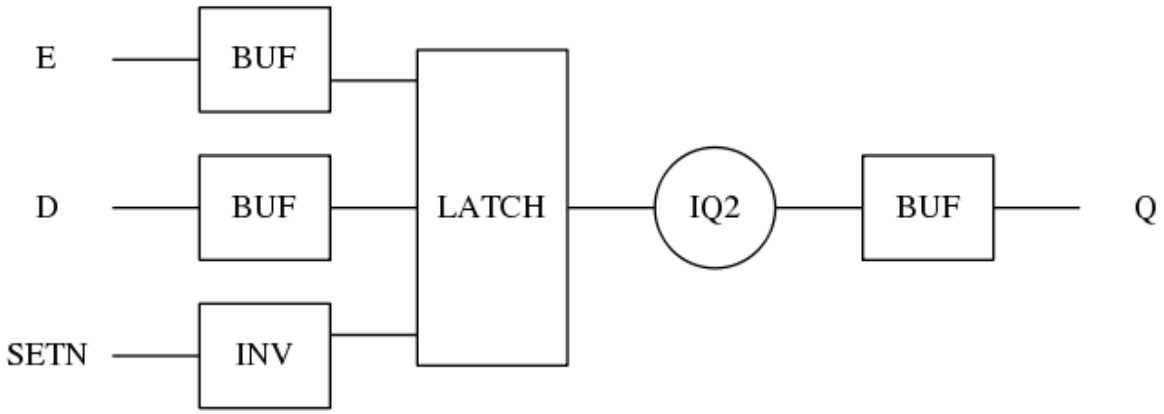

CONSTRAINTS

Constraint Pin	Related Pin	setup(ns)	hold(ns)
D(HL)	E(HL)	0.3430	-0.2980
D(LH)	E(HL)	0.2400	-0.1950

Constraint Pin	Related Pin	recovery(ns)	removal(ns)
SETN(LH)	E(HL)	0.0060	0.0630

Constraint Pin	Related Pin	Minimum Pulse Width(ns)
E(LHL)	E(LH)	0.3980
E(LHL)	E(LH)	0.2120
SETN(HLH)	SETN(HL)	0.2020
SETN(HLH)	SETN(HL)	0.2020

PIN CAPACITANCE (pf)

Pin	Type	Capacitance (pf)
E	input	0.0099
D	input	0.0040
SETN	input	0.0051

DELAY AND OUTPUT TRANSITION TIME corresponding to min slew and load

Input Pin	Output	When Condition	Tin (ns)	Out Load (pf)	Delay (ns)	Tout (ns)
E(LH)	Q(LH)	D&SETN	0.0100	0.0010	0.4270	0.0332
E(LH)	Q(HL)	!D&SETN	0.0100	0.0010	0.6286	0.0289
D(LH)	Q(LH)	E&SETN	0.0100	0.0010	0.4577	0.0331
D(HL)	Q(HL)	E&SETN	0.0100	0.0010	0.5905	0.0289
SETN(LH)	Q(HL)	!D&E	0.0100	0.0010	0.2962	0.0286
SETN(HL)	Q(LH)	!D&!E	0.0100	0.0010	0.2715	0.0328
SETN(HL)	Q(LH)	D&!E	0.0100	0.0010	0.2717	0.0328
SETN(HL)	Q(LH)	!D&E	0.0100	0.0010	0.2709	0.0328

DYNAMIC ENERGY

Input Pin	When Condition	Tin (ns)	Output	Out Load (pf)	Energy (uW/MHz)
SETN	!D&E	0.0100	Q(HL)	0.0010	0.3239
SETN	!D&!E	0.0100	Q(LH)	0.0010	0.5669
SETN	D&!E	0.0100	Q(LH)	0.0010	0.5672
SETN	!D&E	0.0100	Q(LH)	0.0010	0.4338
E	D&SETN	0.0100	Q(LH)	0.0010	0.5082
E	!D&SETN	0.0100	Q(HL)	0.0010	0.5899
D	E&SETN	0.0100	Q(LH)	0.0010	0.5019
D	E&SETN	0.0100	Q(HL)	0.0010	0.6257
SETN(HL)	!D&!E	0.0100	n/a	n/a	0.0491
SETN(HL)	D&!E	0.0100	n/a	n/a	0.0491
SETN(HL)	D&E	0.0100	n/a	n/a	0.0490
D(HL)	!E&!SETN	0.0100	n/a	n/a	0.0321
D(HL)	E&!SETN	0.0100	n/a	n/a	0.2271
D(HL)	!E&SETN	0.0100	n/a	n/a	0.0343
E(LH)	!D&!SETN	0.0100	n/a	n/a	0.1855
E(LH)	D&!SETN	0.0100	n/a	n/a	0.0059
E(LH)	!D&SETN	0.0100	n/a	n/a	-0.0021
E(LH)	D&SETN	0.0100	n/a	n/a	-0.0028
D(LH)	!E&!SETN	0.0100	n/a	n/a	-0.0276
D(LH)	E&!SETN	0.0100	n/a	n/a	0.0632
D(LH)	!E&SETN	0.0100	n/a	n/a	-0.0315
SETN(LH)	!D&!E	0.0100	n/a	n/a	-0.0360
SETN(LH)	D&!E	0.0100	n/a	n/a	-0.0360
SETN(LH)	D&E	0.0100	n/a	n/a	-0.0360
E(HL)	!D&!SETN	0.0100	n/a	n/a	0.3006
E(HL)	D&!SETN	0.0100	n/a	n/a	0.2013
E(HL)	D&SETN	0.0100	n/a	n/a	0.2013
E(HL)	!D&SETN	0.0100	n/a	n/a	0.1994

LEAKAGE POWER

When Condition	Power (nW)
!D&!E&!SETN	0.2413
!D&E&!SETN	0.2451
D&!E&!SETN	0.2413
D&E&!SETN	0.2424
D&E&SETN	0.2826
!D&!E&SETN	0.3209
D&!E&SETN	0.3570
!D&E&SETN	0.2727

gf180mcu_fd_sc_mcu9t5v0__latsnq_2

gf180mcu_fd_sc_mcu9t5v0__latsnq_2 symbol

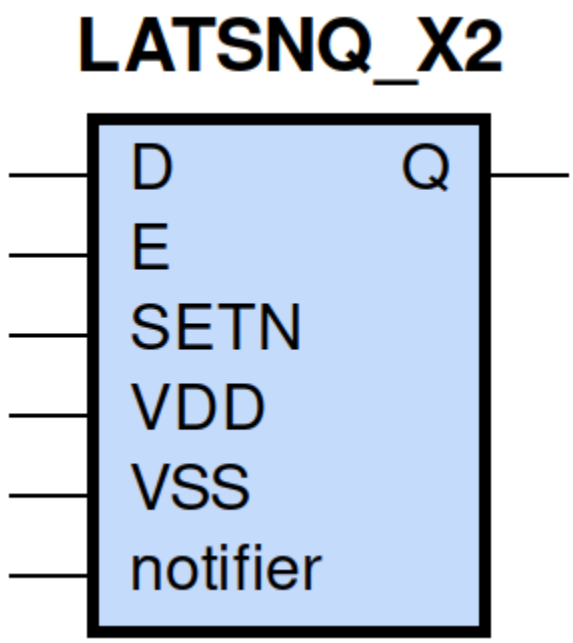

gf180mcu_fd_sc_mcu9t5v0__latsnq_2 schematic

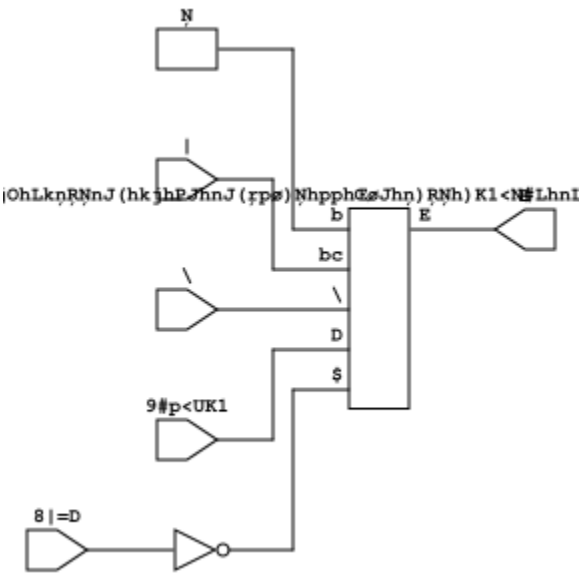

gf180mcu_fd_sc_mcu9t5v0__latsnq_2 layout

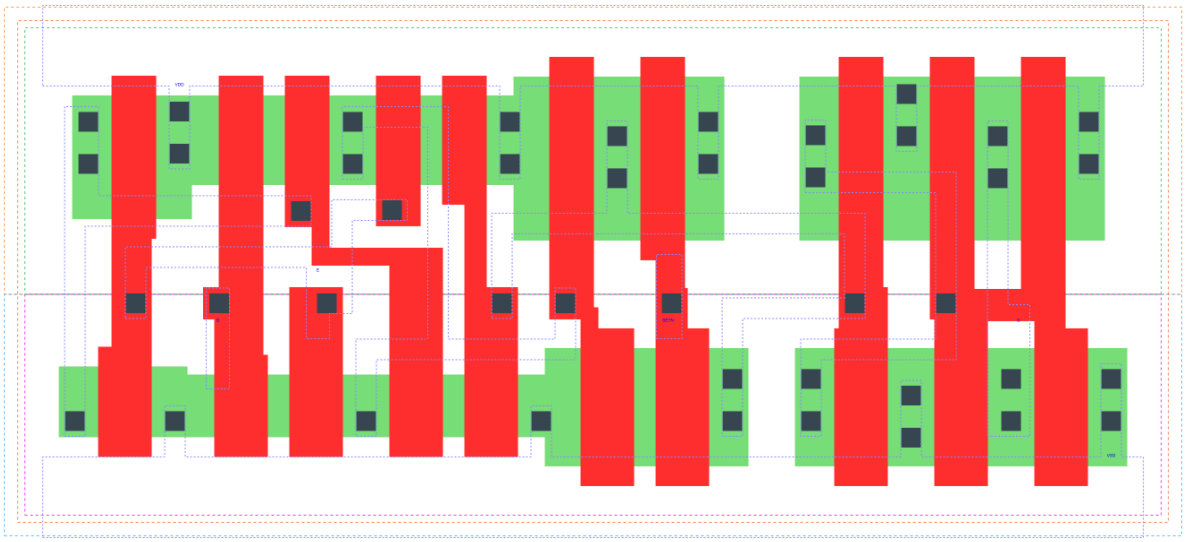

LATSNQ_X2 is a positive D-latch with active low set and 2X drive strength

Attributes

Attribute	Value
area	62.092800 μm^2

TRUTH TABLE

Input			Output
SETN	D	E	Q
H	L	H	L
H	H	H	H
H	X	L	Q
L	X	X	H

FUNCTIONAL SCHEMATIC

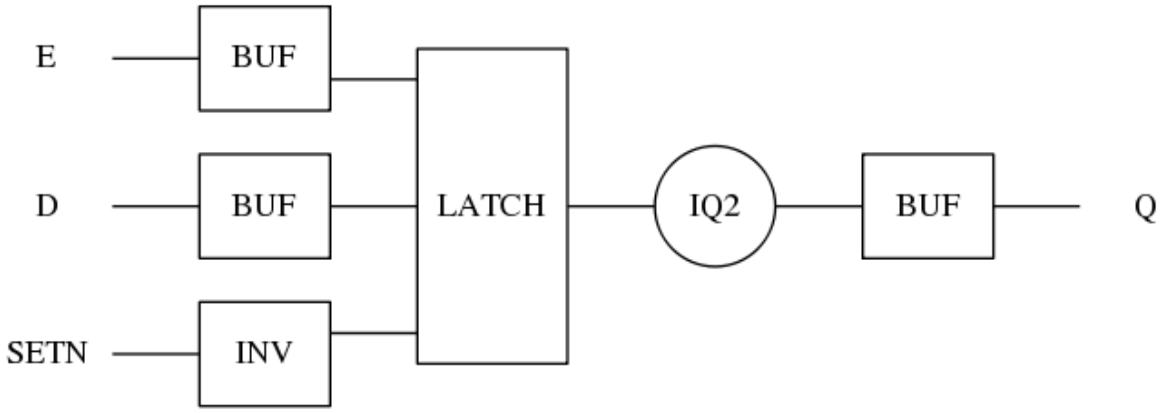

CONSTRAINTS

Constraint Pin	Related Pin	setup(ns)	hold(ns)
D(HL)	E(HL)	0.3490	-0.3030
D(LH)	E(HL)	0.2630	-0.2180

Constraint Pin	Related Pin	recovery(ns)	removal(ns)
SETN(LH)	E(HL)	-0.0230	0.1030

Constraint Pin	Related Pin	Minimum Pulse Width(ns)
E(LHL)	E(LH)	0.3980
E(LHL)	E(LH)	0.2320
SETN(HLH)	SETN(HL)	0.2120
SETN(HLH)	SETN(HL)	0.2120

PIN CAPACITANCE (pf)

Pin	Type	Capacitance (pf)
E	input	0.0098
D	input	0.0040
SETN	input	0.0070

DELAY AND OUTPUT TRANSITION TIME corresponding to min slew and load

Input Pin	Output	When Condition	Tin (ns)	Out Load (pf)	Delay (ns)	Tout (ns)
E(LH)	Q(LH)	D&SETN	0.0100	0.0010	0.4351	0.0254
E(LH)	Q(HL)	!D&SETN	0.0100	0.0010	0.6310	0.0262
D(LH)	Q(LH)	E&SETN	0.0100	0.0010	0.4666	0.0254
D(HL)	Q(HL)	E&SETN	0.0100	0.0010	0.5939	0.0262
SETN(LH)	Q(HL)	!D&E	0.0100	0.0010	0.2722	0.0259
SETN(HL)	Q(LH)	!D&!E	0.0100	0.0010	0.2568	0.0250
SETN(HL)	Q(LH)	D&!E	0.0100	0.0010	0.2568	0.0250
SETN(HL)	Q(LH)	!D&E	0.0100	0.0010	0.2561	0.0251

DYNAMIC ENERGY

Input Pin	When Condition	Tin (ns)	Output	Out Load (pf)	Energy (uW/MHz)
SETN	!D&E	0.0100	Q(HL)	0.0010	0.5154
SETN	!D&!E	0.0100	Q(LH)	0.0010	0.7875
SETN	D&!E	0.0100	Q(LH)	0.0010	0.7876
SETN	!D&E	0.0100	Q(LH)	0.0010	0.6404
E	D&SETN	0.0100	Q(LH)	0.0010	0.7502
E	!D&SETN	0.0100	Q(HL)	0.0010	0.8441
D	E&SETN	0.0100	Q(LH)	0.0010	0.7448
D	E&SETN	0.0100	Q(HL)	0.0010	0.8810
SETN(HL)	!D&!E	0.0100	n/a	n/a	0.0669
SETN(HL)	D&!E	0.0100	n/a	n/a	0.0669
SETN(HL)	D&E	0.0100	n/a	n/a	0.0669
D(HL)	!E&!SETN	0.0100	n/a	n/a	0.0321
D(HL)	E&!SETN	0.0100	n/a	n/a	0.2437
D(HL)	!E&SETN	0.0100	n/a	n/a	0.0344
E(LH)	!D&!SETN	0.0100	n/a	n/a	0.2014
E(LH)	D&!SETN	0.0100	n/a	n/a	0.0059
E(LH)	!D&SETN	0.0100	n/a	n/a	-0.0019
E(LH)	D&SETN	0.0100	n/a	n/a	-0.0028
D(LH)	!E&!SETN	0.0100	n/a	n/a	-0.0276
D(LH)	E&!SETN	0.0100	n/a	n/a	0.0782
D(LH)	!E&SETN	0.0100	n/a	n/a	-0.0315
SETN(LH)	!D&!E	0.0100	n/a	n/a	-0.0464
SETN(LH)	D&!E	0.0100	n/a	n/a	-0.0464
SETN(LH)	D&E	0.0100	n/a	n/a	-0.0464
E(HL)	!D&!SETN	0.0100	n/a	n/a	0.3140
E(HL)	D&!SETN	0.0100	n/a	n/a	0.2001
E(HL)	D&SETN	0.0100	n/a	n/a	0.2001
E(HL)	!D&SETN	0.0100	n/a	n/a	0.2007

LEAKAGE POWER

When Condition	Power (nW)
!D&!E&!SETN	0.2672
!D&E&!SETN	0.2711
D&!E&!SETN	0.2672
D&E&!SETN	0.2683
D&E&SETN	0.3084
!D&!E&SETN	0.3485
D&!E&SETN	0.3697
!D&E&SETN	0.3002

gf180mcu_fd_sc_mcu9t5v0__latsnq_4

gf180mcu_fd_sc_mcu9t5v0__latsnq_4 symbol

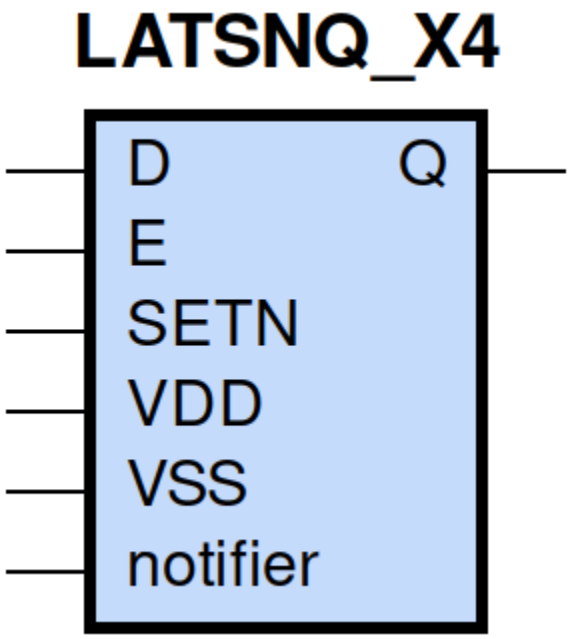

gf180mcu_fd_sc_mcu9t5v0__latsnq_4 schematic

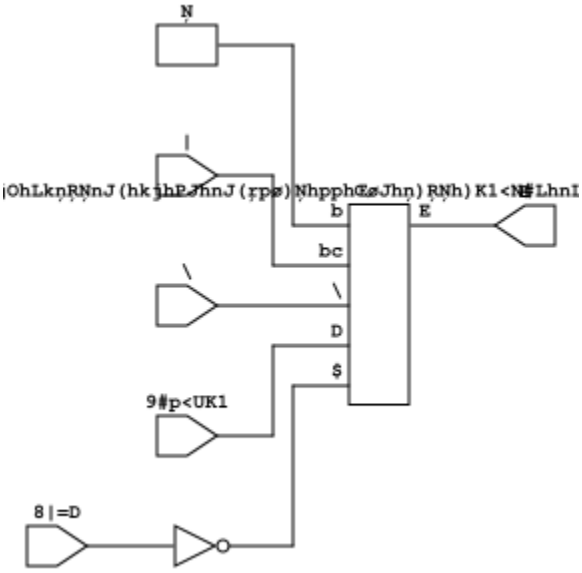

gf180mcu_fd_sc_mcu9t5v0__latsnq_4 layout

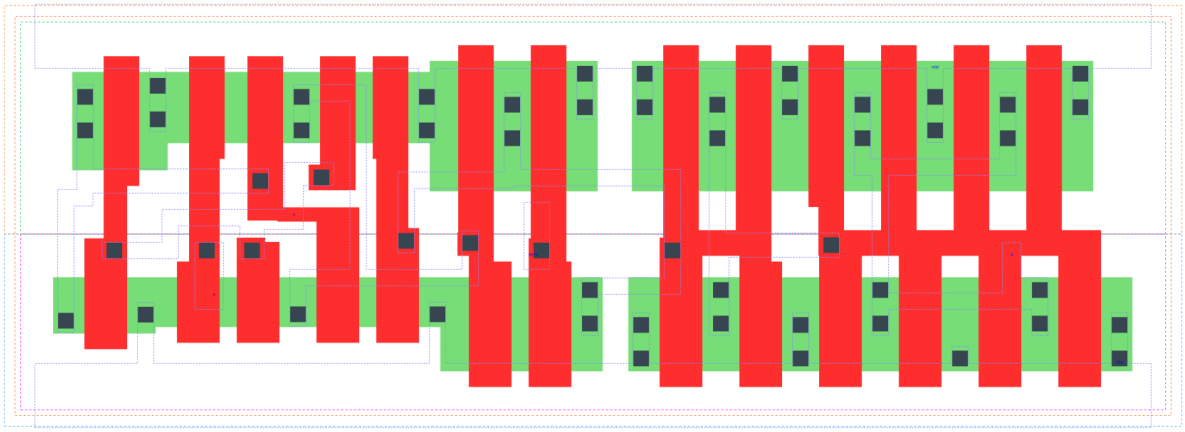

LATSNQ_X4 is a positive D-latch with active low set and 4X drive strength

Attributes

Attribute	Value
area	79.027200 μm^2

TRUTH TABLE

Input			Output
SETN	D	E	Q
H	L	H	L
H	H	H	H
H	X	L	Q
L	X	X	H

FUNCTIONAL SCHEMATIC

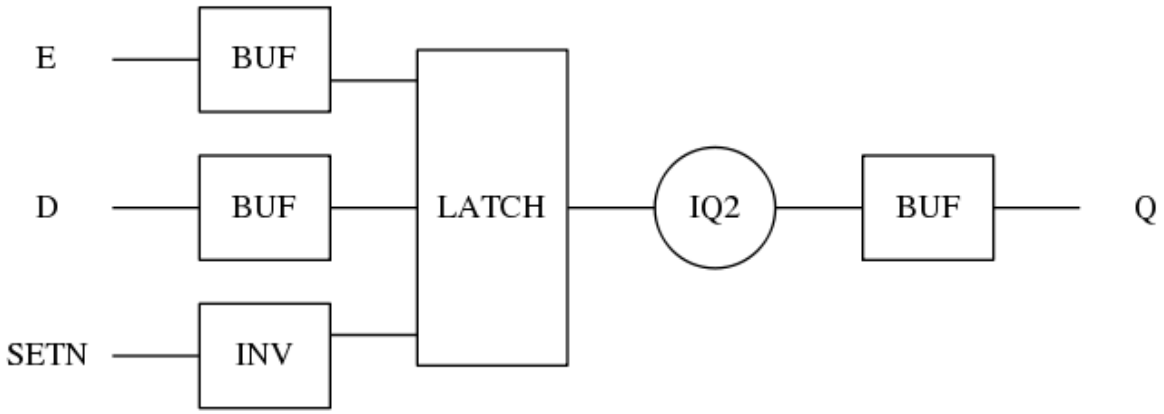

CONSTRAINTS

Constraint Pin	Related Pin	setup(ns)	hold(ns)
D(HL)	E(HL)	0.3720	-0.3260
D(LH)	E(HL)	0.2860	-0.2290

Constraint Pin	Related Pin	recovery(ns)	removal(ns)
SETN(LH)	E(HL)	0.0170	0.0740

Constraint Pin	Related Pin	Minimum Pulse Width(ns)
E(LHL)	E(LH)	0.4270
E(LHL)	E(LH)	0.2510
SETN(HLH)	SETN(HL)	0.2410
SETN(HLH)	SETN(HL)	0.2410

PIN CAPACITANCE (pf)

Pin	Type	Capacitance (pf)
E	input	0.0099
D	input	0.0040
SETN	input	0.0070

DELAY AND OUTPUT TRANSITION TIME corresponding to min slew and load

Input Pin	Output	When Condition	Tin (ns)	Out Load (pf)	Delay (ns)	Tout (ns)
E(LH)	Q(LH)	D&SETN	0.0100	0.0010	0.4622	0.0241
E(LH)	Q(HL)	!D&SETN	0.0100	0.0010	0.6584	0.0245
D(LH)	Q(LH)	E&SETN	0.0100	0.0010	0.4934	0.0241
D(HL)	Q(HL)	E&SETN	0.0100	0.0010	0.6243	0.0246
SETN(LH)	Q(HL)	!D&E	0.0100	0.0010	0.2998	0.0242
SETN(HL)	Q(LH)	!D&!E	0.0100	0.0010	0.2833	0.0239
SETN(HL)	Q(LH)	D&!E	0.0100	0.0010	0.2833	0.0239
SETN(HL)	Q(LH)	!D&E	0.0100	0.0010	0.2826	0.0239

DYNAMIC ENERGY

Input Pin	When Condition	Tin (ns)	Output	Out Load (pf)	Energy (uW/MHz)
SETN	!D&E	0.0100	Q(HL)	0.0010	0.9482
SETN	!D&!E	0.0100	Q(LH)	0.0010	1.2016
SETN	D&!E	0.0100	Q(LH)	0.0010	1.2016
SETN	!D&E	0.0100	Q(LH)	0.0010	1.0514
E	D&SETN	0.0100	Q(LH)	0.0010	1.1760
E	!D&SETN	0.0100	Q(HL)	0.0010	1.2834
D	E&SETN	0.0100	Q(LH)	0.0010	1.1692
D	E&SETN	0.0100	Q(HL)	0.0010	1.3198
SETN(HL)	!D&!E	0.0100	n/a	n/a	0.0669
SETN(HL)	D&!E	0.0100	n/a	n/a	0.0669
SETN(HL)	D&E	0.0100	n/a	n/a	0.0669
D(HL)	!E&!SETN	0.0100	n/a	n/a	0.0320
D(HL)	E&!SETN	0.0100	n/a	n/a	0.2427
D(HL)	!E&SETN	0.0100	n/a	n/a	0.0344
E(LH)	!D&!SETN	0.0100	n/a	n/a	0.2002
E(LH)	D&!SETN	0.0100	n/a	n/a	0.0071
E(LH)	!D&SETN	0.0100	n/a	n/a	-0.0020
E(LH)	D&SETN	0.0100	n/a	n/a	-0.0028
D(LH)	!E&!SETN	0.0100	n/a	n/a	-0.0275
D(LH)	E&!SETN	0.0100	n/a	n/a	0.0796
D(LH)	!E&SETN	0.0100	n/a	n/a	-0.0315
SETN(LH)	!D&!E	0.0100	n/a	n/a	-0.0463
SETN(LH)	D&!E	0.0100	n/a	n/a	-0.0463
SETN(LH)	D&E	0.0100	n/a	n/a	-0.0463
E(HL)	!D&!SETN	0.0100	n/a	n/a	0.3082
E(HL)	D&!SETN	0.0100	n/a	n/a	0.1946
E(HL)	D&SETN	0.0100	n/a	n/a	0.1946
E(HL)	!D&SETN	0.0100	n/a	n/a	0.1951

LEAKAGE POWER

When Condition	Power (nW)
!D&!E&!SETN	0.3452
!D&E&!SETN	0.3491
D&!E&!SETN	0.3452
D&E&!SETN	0.3463
D&E&SETN	0.3864
!D&!E&SETN	0.4270
D&!E&SETN	0.4476
!D&E&SETN	0.3795

gf180mcu_fd_sc_mcu9t5v0__mux2_1

gf180mcu_fd_sc_mcu9t5v0__mux2_1 symbol

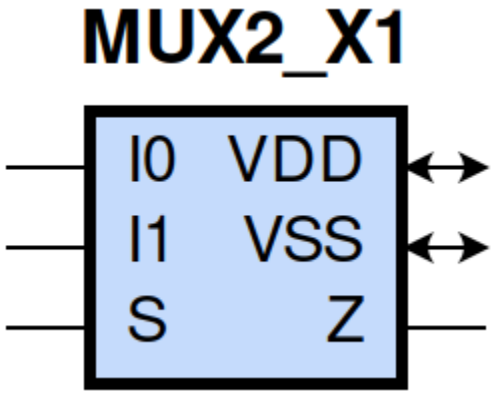

gf180mcu_fd_sc_mcu9t5v0__mux2_1 schematic

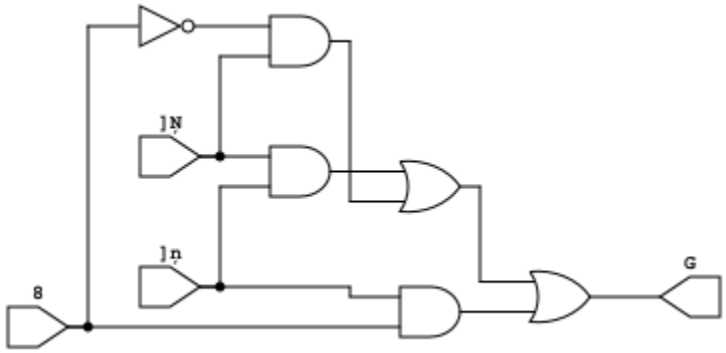

gf180mcu_fd_sc_mcu9t5v0__mux2_1 layout

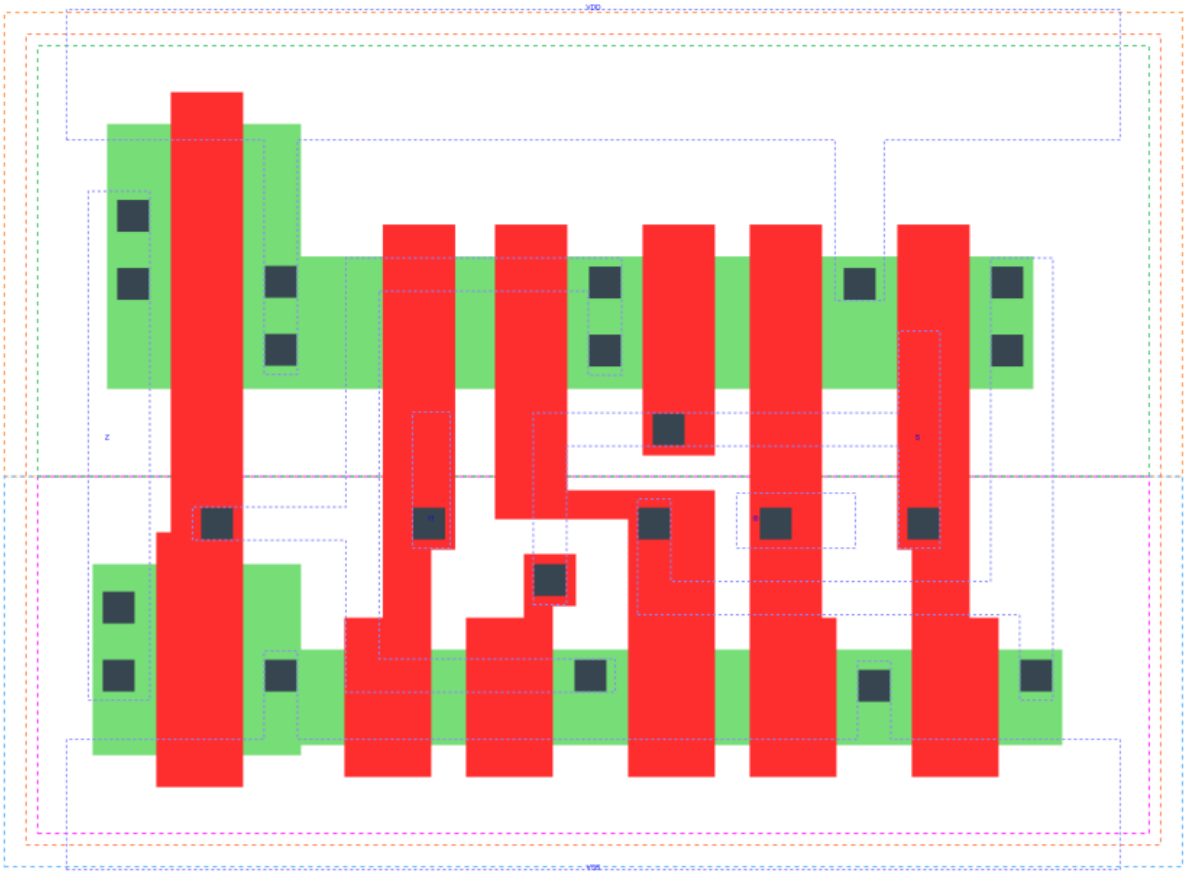

MUX2_X1 is a 2-to-1 multiplexer with 1X drive strength

Attributes

Attribute	Value
area	36.691200 μm^2

OUTPUT FUNCTIONS

Output Pin	Function
Z	((I0&(!S))|(I1&S))

TRUTH TABLE FOR Z

I0	I1	S	Z
1	?	0	1
?	1	1	1
0	?	0	0
?	0	1	0

FUNCTIONAL SCHEMATIC

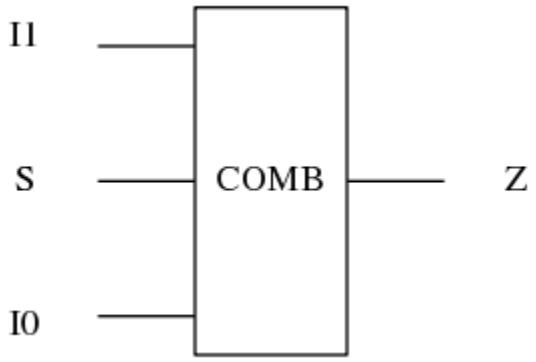

PIN CAPACITANCE (pf)

Pin	Type	Capacitance (pf)
I1	input	0.0037
S	input	0.0083
I0	input	0.0039

DELAY AND OUTPUT TRANSITION TIME corresponding to min slew and load

Input Pin	Output	When Condition	Tin (ns)	Out Load (pf)	Delay (ns)	Tout (ns)
I1(HL)	Z(HL)	!I0&S	0.0100	0.0010	0.3339	0.0568
I1(HL)	Z(HL)	I0&S	0.0100	0.0010	0.3338	0.0568
I1(LH)	Z(LH)	!I0&S	0.0100	0.0010	0.2359	0.0426
I1(LH)	Z(LH)	I0&S	0.0100	0.0010	0.2359	0.0426
S(LH)	Z(HL)	I0&!I1	0.0100	0.0010	0.3680	0.0570
S(HL)	Z(HL)	!I0&I1	0.0100	0.0010	0.2721	0.0550
S(LH)	Z(LH)	!I0&I1	0.0100	0.0010	0.2017	0.0422
S(HL)	Z(LH)	I0&!I1	0.0100	0.0010	0.3310	0.0431
I0(HL)	Z(HL)	!I1&!S	0.0100	0.0010	0.3309	0.0567
I0(HL)	Z(HL)	I1&!S	0.0100	0.0010	0.3309	0.0567
I0(LH)	Z(LH)	!I1&!S	0.0100	0.0010	0.2399	0.0427
I0(LH)	Z(LH)	I1&!S	0.0100	0.0010	0.2399	0.0427

DYNAMIC ENERGY

Input Pin	When Condition	Tin (ns)	Output	Out Load (pf)	Energy (uW/MHz)
I0	!I1&!S	0.0100	Z(HL)	0.0010	0.3755
I0	I1&!S	0.0100	Z(HL)	0.0010	0.3756
S	I0&!I1	0.0100	Z(HL)	0.0010	0.3627
S	!I0&I1	0.0100	Z(HL)	0.0010	0.4708
I1	!I0&S	0.0100	Z(HL)	0.0010	0.3994
I1	I0&S	0.0100	Z(HL)	0.0010	0.3994
I0	!I1&!S	0.0100	Z(LH)	0.0010	0.2152
I0	I1&!S	0.0100	Z(LH)	0.0010	0.2152
S	!I0&I1	0.0100	Z(LH)	0.0010	0.1919
S	I0&!I1	0.0100	Z(LH)	0.0010	0.3943
I1	!I0&S	0.0100	Z(LH)	0.0010	0.1907
I1	I0&S	0.0100	Z(LH)	0.0010	0.1907
I0(HL)	!I1&S	0.0100	n/a	n/a	0.0327
I0(HL)	I1&S	0.0100	n/a	n/a	0.0293
S(HL)	!I0&!I1	0.0100	n/a	n/a	0.1683
S(HL)	I0&I1	0.0100	n/a	n/a	0.1655
I0(LH)	!I1&S	0.0100	n/a	n/a	-0.0285
I0(LH)	I1&S	0.0100	n/a	n/a	-0.0247
S(LH)	!I0&!I1	0.0100	n/a	n/a	0.0111
S(LH)	I0&I1	0.0100	n/a	n/a	0.0086
I1(LH)	!I0&!S	0.0100	n/a	n/a	-0.0288
I1(LH)	I0&!S	0.0100	n/a	n/a	-0.0252
I1(HL)	!I0&!S	0.0100	n/a	n/a	0.0327
I1(HL)	I0&!S	0.0100	n/a	n/a	0.0293

LEAKAGE POWER

When Condition	Power (nW)
!I0&!I1&!S	0.1930
!I0&!I1&S	0.1938
!I0&I1&!S	0.1932
I0&!I1&S	0.1941
!I0&I1&S	0.1903
I0&!I1&!S	0.1894
I0&I1&!S	0.1894
I0&I1&S	0.1903

gf180mcu_fd_sc_mcu9t5v0__mux2_2

gf180mcu_fd_sc_mcu9t5v0__mux2_2 symbol

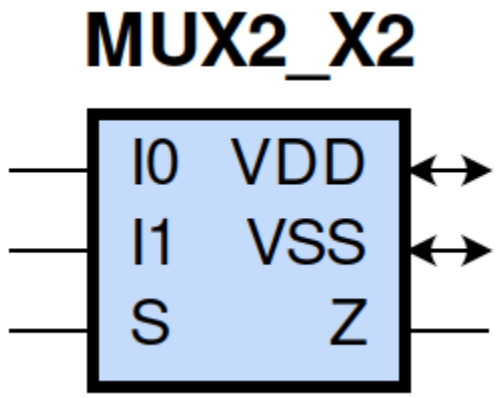

gf180mcu_fd_sc_mcu9t5v0__mux2_2 schematic

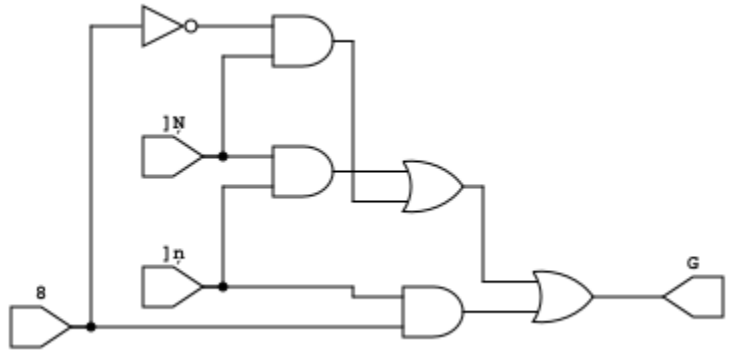

gf180mcu_fd_sc_mcu9t5v0__mux2_2 layout

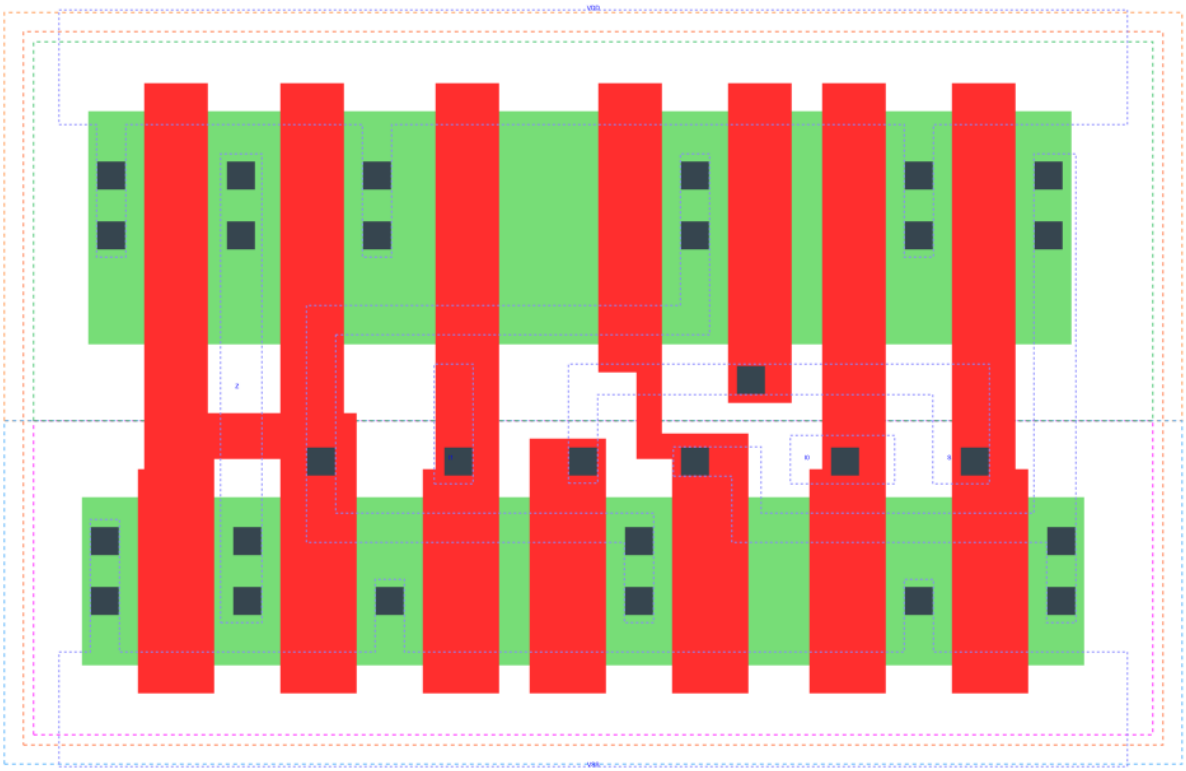

MUX2_X2 is a 2-to-1 multiplexer with 2X drive strength

Attributes

Attribute	Value
area	42.336000 μm^2

OUTPUT FUNCTIONS

Output Pin	Function
Z	((I0&(!S))|(I1&S))

TRUTH TABLE FOR Z

I0	I1	S	Z
1	?	0	1
?	1	1	1
0	?	0	0
?	0	1	0

FUNCTIONAL SCHEMATIC

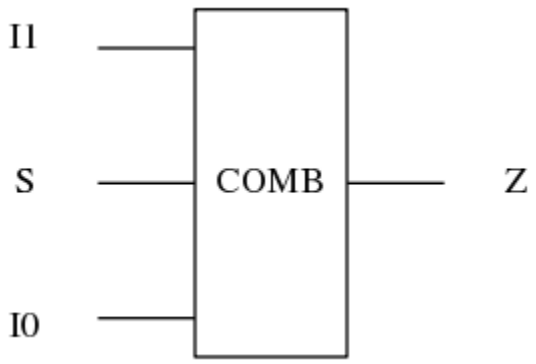

PIN CAPACITANCE (pf)

Pin	Type	Capacitance (pf)
I1	input	0.0066
S	input	0.0145
I0	input	0.0067

DELAY AND OUTPUT TRANSITION TIME corresponding to min slew and load

Input Pin	Output	When Condition	Tin (ns)	Out Load (pf)	Delay (ns)	Tout (ns)
I1(HL)	Z(HL)	!I0&S	0.0100	0.0010	0.2974	0.0447
I1(HL)	Z(HL)	I0&S	0.0100	0.0010	0.2974	0.0447
I1(LH)	Z(LH)	!I0&S	0.0100	0.0010	0.2170	0.0328
I1(LH)	Z(LH)	I0&S	0.0100	0.0010	0.2170	0.0328
S(LH)	Z(HL)	I0&!I1	0.0100	0.0010	0.3153	0.0446
S(HL)	Z(HL)	!I0&I1	0.0100	0.0010	0.2339	0.0435
S(LH)	Z(LH)	!I0&I1	0.0100	0.0010	0.1811	0.0325
S(HL)	Z(LH)	I0&!I1	0.0100	0.0010	0.2838	0.0327
I0(HL)	Z(HL)	!I1&!S	0.0100	0.0010	0.2933	0.0449
I0(HL)	Z(HL)	I1&!S	0.0100	0.0010	0.2932	0.0451
I0(LH)	Z(LH)	!I1&!S	0.0100	0.0010	0.2179	0.0325
I0(LH)	Z(LH)	I1&!S	0.0100	0.0010	0.2179	0.0325

DYNAMIC ENERGY

Input Pin	When Condition	Tin (ns)	Output	Out Load (pf)	Energy (uW/MHz)
I0	!I1&!S	0.0100	Z(HL)	0.0010	0.6861
I0	I1&!S	0.0100	Z(HL)	0.0010	0.6863
S	I0&!I1	0.0100	Z(HL)	0.0010	0.6459
S	!I0&I1	0.0100	Z(HL)	0.0010	0.8169
I1	!I0&S	0.0100	Z(HL)	0.0010	0.7272
I1	I0&S	0.0100	Z(HL)	0.0010	0.7272
I0	!I1&!S	0.0100	Z(LH)	0.0010	0.3879
I0	I1&!S	0.0100	Z(LH)	0.0010	0.3879
S	!I0&I1	0.0100	Z(LH)	0.0010	0.3534
S	I0&!I1	0.0100	Z(LH)	0.0010	0.6812
I1	!I0&S	0.0100	Z(LH)	0.0010	0.3548
I1	I0&S	0.0100	Z(LH)	0.0010	0.3548
I0(HL)	!I1&S	0.0100	n/a	n/a	0.0665
I0(HL)	I1&S	0.0100	n/a	n/a	0.0596
S(HL)	!I0&!I1	0.0100	n/a	n/a	0.2805
S(HL)	I0&I1	0.0100	n/a	n/a	0.2686
I0(LH)	!I1&S	0.0100	n/a	n/a	-0.0578
I0(LH)	I1&S	0.0100	n/a	n/a	-0.0501
S(LH)	!I0&!I1	0.0100	n/a	n/a	0.0163
S(LH)	I0&I1	0.0100	n/a	n/a	0.0243
I1(LH)	!I0&!S	0.0100	n/a	n/a	-0.0583
I1(LH)	I0&!S	0.0100	n/a	n/a	-0.0505
I1(HL)	!I0&!S	0.0100	n/a	n/a	0.0662
I1(HL)	I0&!S	0.0100	n/a	n/a	0.0595

LEAKAGE POWER

When Condition	Power (nW)
!I0&!I1&!S	0.2199
!I0&!I1&S	0.2212
!I0&I1&!S	0.2202
I0&!I1&S	0.2215
!I0&I1&S	0.2172
I0&!I1&!S	0.2159
I0&I1&!S	0.2159
I0&I1&S	0.2172

gf180mcu_fd_sc_mcu9t5v0__mux2_4

gf180mcu_fd_sc_mcu9t5v0__mux2_4 symbol

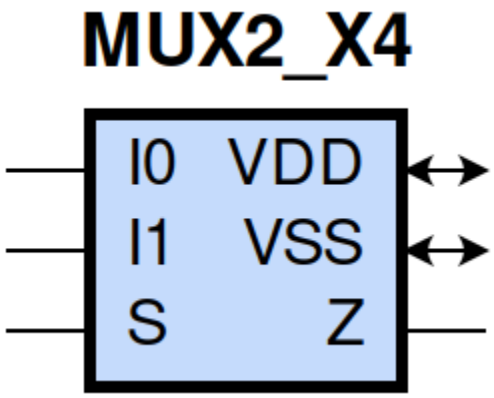

gf180mcu_fd_sc_mcu9t5v0__mux2_4 schematic

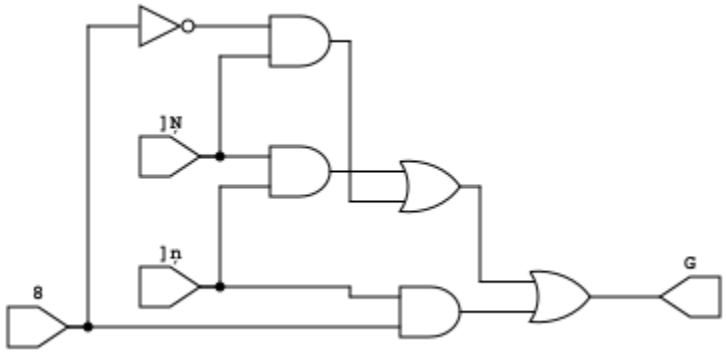

gf180mcu_fd_sc_mcu9t5v0__mux2_4 layout

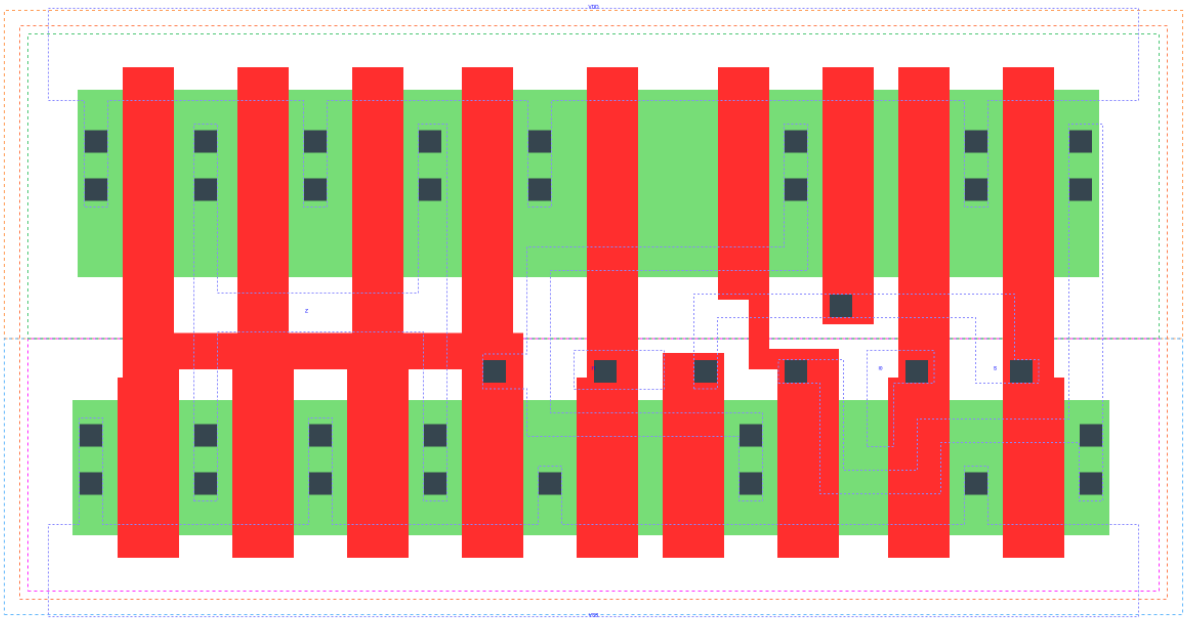

MUX2_X4 is a 2-to-1 multiplexer with 4X drive strength

Attributes

Attribute	Value
area	53.625600 μm^2

OUTPUT FUNCTIONS

Output Pin	Function
Z	((I0&(!S))|(I1&S))

TRUTH TABLE FOR Z

I0	I1	S	Z
1	?	0	1
?	1	1	1
0	?	0	0
?	0	1	0

FUNCTIONAL SCHEMATIC

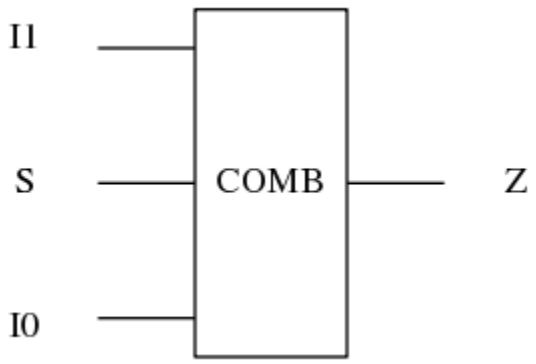

PIN CAPACITANCE (pf)

Pin	Type	Capacitance (pf)
I1	input	0.0066
S	input	0.0143
I0	input	0.0068

DELAY AND OUTPUT TRANSITION TIME corresponding to min slew and load

Input Pin	Output	When Condition	Tin (ns)	Out Load (pf)	Delay (ns)	Tout (ns)
I1(HL)	Z(HL)	!I0&S	0.0100	0.0010	0.4077	0.0619
I1(HL)	Z(HL)	I0&S	0.0100	0.0010	0.4077	0.0619
I1(LH)	Z(LH)	!I0&S	0.0100	0.0010	0.2941	0.0411
I1(LH)	Z(LH)	I0&S	0.0100	0.0010	0.2941	0.0411
S(LH)	Z(HL)	I0&!I1	0.0100	0.0010	0.4221	0.0619
S(HL)	Z(HL)	!I0&I1	0.0100	0.0010	0.3443	0.0619
S(LH)	Z(LH)	!I0&I1	0.0100	0.0010	0.2583	0.0408
S(HL)	Z(LH)	I0&!I1	0.0100	0.0010	0.3614	0.0410
I0(HL)	Z(HL)	!I1&!S	0.0100	0.0010	0.4037	0.0622
I0(HL)	Z(HL)	I1&!S	0.0100	0.0010	0.4037	0.0622
I0(LH)	Z(LH)	!I1&!S	0.0100	0.0010	0.2948	0.0408
I0(LH)	Z(LH)	I1&!S	0.0100	0.0010	0.2948	0.0408

DYNAMIC ENERGY

Input Pin	When Condition	Tin (ns)	Output	Out Load (pf)	Energy (uW/MHz)
I0	!I1&!S	0.0100	Z(HL)	0.0010	1.4438
I0	I1&!S	0.0100	Z(HL)	0.0010	1.4438
S	I0&!I1	0.0100	Z(HL)	0.0010	1.3969
S	!I0&I1	0.0100	Z(HL)	0.0010	1.5836
I1	!I0&S	0.0100	Z(HL)	0.0010	1.4834
I1	I0&S	0.0100	Z(HL)	0.0010	1.4834
I0	!I1&!S	0.0100	Z(LH)	0.0010	0.8483
I0	I1&!S	0.0100	Z(LH)	0.0010	0.8483
S	!I0&I1	0.0100	Z(LH)	0.0010	0.8168
S	I0&!I1	0.0100	Z(LH)	0.0010	1.1440
I1	!I0&S	0.0100	Z(LH)	0.0010	0.8169
I1	I0&S	0.0100	Z(LH)	0.0010	0.8169
I0(HL)	!I1&S	0.0100	n/a	n/a	0.0666
I0(HL)	I1&S	0.0100	n/a	n/a	0.0596
S(HL)	!I0&!I1	0.0100	n/a	n/a	0.2864
S(HL)	I0&I1	0.0100	n/a	n/a	0.2747
I0(LH)	!I1&S	0.0100	n/a	n/a	-0.0578
I0(LH)	I1&S	0.0100	n/a	n/a	-0.0501
S(LH)	!I0&!I1	0.0100	n/a	n/a	0.0165
S(LH)	I0&I1	0.0100	n/a	n/a	0.0245
I1(LH)	!I0&!S	0.0100	n/a	n/a	-0.0583
I1(LH)	I0&!S	0.0100	n/a	n/a	-0.0505
I1(HL)	!I0&!S	0.0100	n/a	n/a	0.0662
I1(HL)	I0&!S	0.0100	n/a	n/a	0.0595

LEAKAGE POWER

When Condition	Power (nW)
!I0&!I1&!S	0.2736
!I0&!I1&S	0.2749
!I0&I1&!S	0.2739
I0&!I1&S	0.2752
!I0&I1&S	0.2684
I0&!I1&!S	0.2671
I0&I1&!S	0.2671
I0&I1&S	0.2684

gf180mcu_fd_sc_mcu9t5v0__mux4_1

gf180mcu_fd_sc_mcu9t5v0__mux4_1 symbol

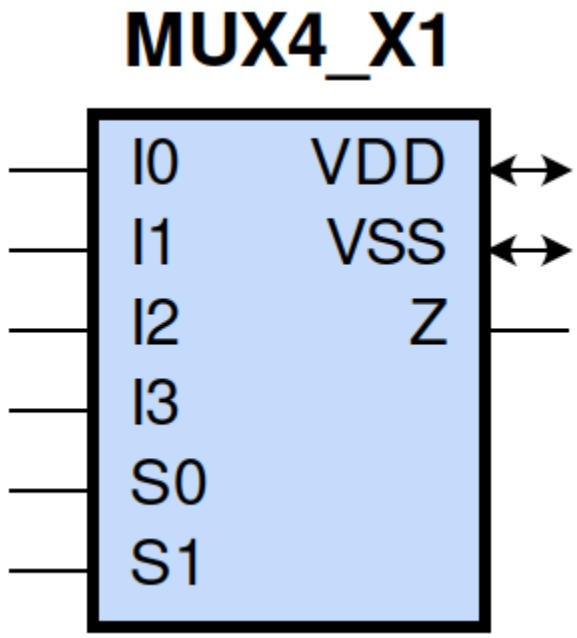

gf180mcu_fd_sc_mcu9t5v0__mux4_1 schematic

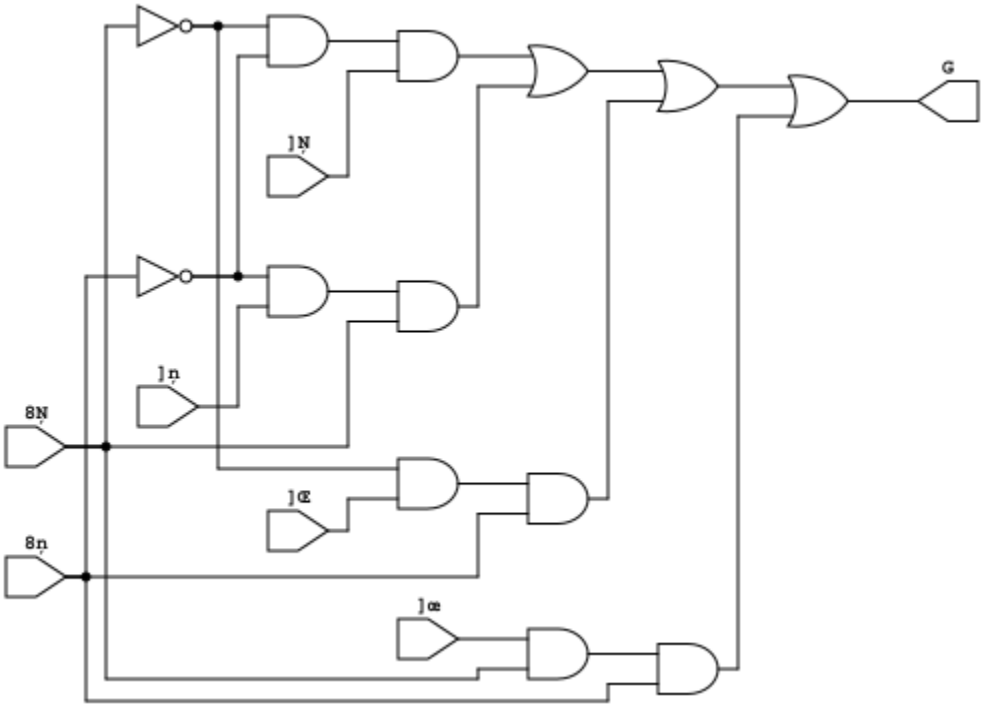

gf180mcu_fd_sc_mcu9t5v0__mux4_1 layout

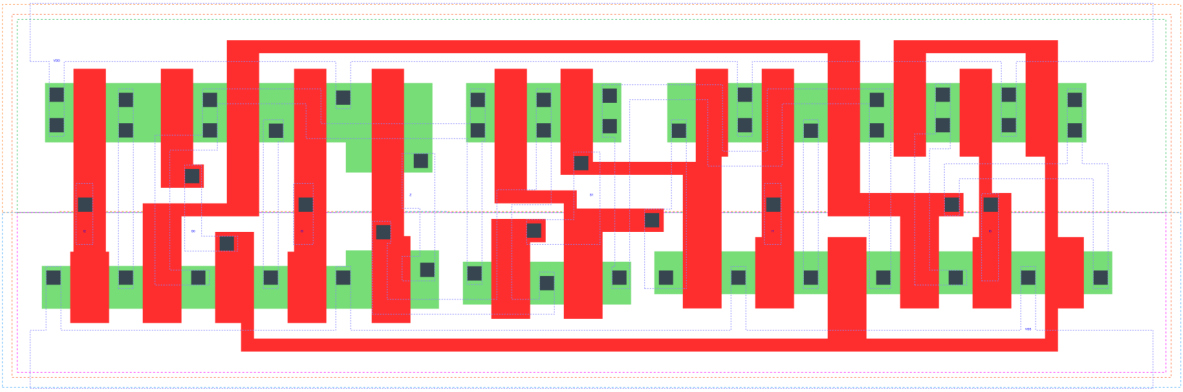

MUX4_X1 is a 4-to-1 multiplexer with 1X drive strength

Attributes

Attribute	Value
area	87.494400 μm^2

OUTPUT FUNCTIONS

Output Pin	Function
Z	((I0&(!S0)&(!S1))|(I1&S0&(!S1))|(I2&(!S0)&S1)|(I3&S0&S1))

TRUTH TABLE FOR Z

I0	I1	I2	I3	S0	S1	Z
1	?	?	?	0	0	1
?	1	?	?	1	0	1
?	?	1	?	0	1	1
?	?	?	1	1	1	1
0	?	?	?	0	0	0
?	0	?	?	1	0	0
?	?	0	?	0	1	0
?	?	?	0	1	1	0

FUNCTIONAL SCHEMATIC

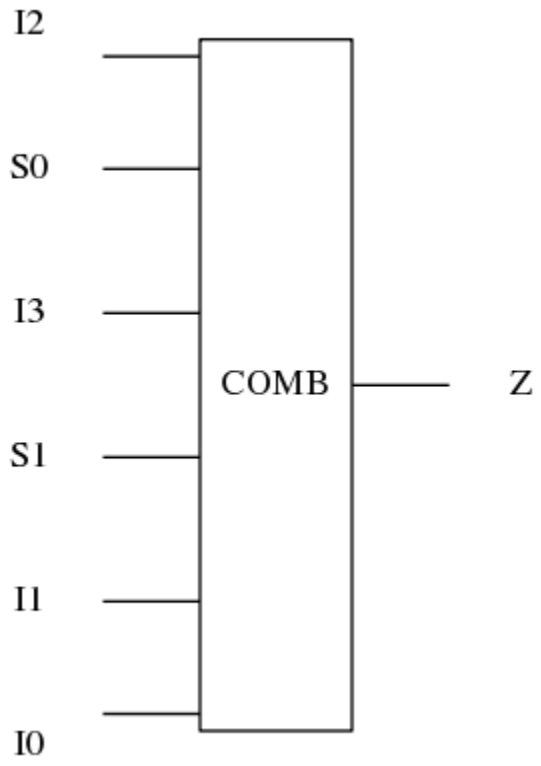

PIN CAPACITANCE (pf)

Pin	Type	Capacitance (pf)
I2	input	0.0039
S0	input	0.0137
I3	input	0.0040
S1	input	0.0084
I1	input	0.0039
I0	input	0.0040

DELAY AND OUTPUT TRANSITION TIME corresponding to min slew and load

Input Pin	Output	When Condition	Tin (ns)	Out Load (pf)	Delay (ns)	Tout (ns)
I2(HL)	Z(HL)	!I0&!I1&!I3&!S0&S1	0.0100	0.0010	0.3839	0.0734
I2(HL)	Z(HL)	!I0&!I1&I3&!S0&S1	0.0100	0.0010	0.3839	0.0734
I2(HL)	Z(HL)	!I0&I1&!I3&!S0&S1	0.0100	0.0010	0.3839	0.0734
I2(HL)	Z(HL)	!I0&I1&I3&!S0&S1	0.0100	0.0010	0.3839	0.0735
I2(HL)	Z(HL)	I0&!I1&!I3&!S0&S1	0.0100	0.0010	0.3839	0.0734

continues on next page

Table 208 – continued from previous page

I2(HL)	Z(HL)	I0&!I1&I3&!S0&S1	0.0100	0.0010	0.3838	0.0736
I2(HL)	Z(HL)	I0&I1&!I3&!S0&S1	0.0100	0.0010	0.3839	0.0734
I2(HL)	Z(HL)	I0&I1&I3&!S0&S1	0.0100	0.0010	0.3838	0.0736
I2(LH)	Z(LH)	!I0&!I1&!I3&!S0&S1	0.0100	0.0010	0.3603	0.0543
I2(LH)	Z(LH)	!I0&!I1&I3&!S0&S1	0.0100	0.0010	0.3603	0.0543
I2(LH)	Z(LH)	!I0&I1&!I3&!S0&S1	0.0100	0.0010	0.3603	0.0543
I2(LH)	Z(LH)	!I0&I1&I3&!S0&S1	0.0100	0.0010	0.3603	0.0543
I2(LH)	Z(LH)	I0&!I1&!I3&!S0&S1	0.0100	0.0010	0.3603	0.0543
I2(LH)	Z(LH)	I0&!I1&I3&!S0&S1	0.0100	0.0010	0.3603	0.0543
I2(LH)	Z(LH)	I0&I1&!I3&!S0&S1	0.0100	0.0010	0.3603	0.0543
I2(LH)	Z(LH)	I0&I1&I3&!S0&S1	0.0100	0.0010	0.3603	0.0543
S0(HL)	Z(LH)	!I0&!I1&I2&!I3&S1	0.0100	0.0010	0.4495	0.0553
S0(HL)	Z(LH)	!I0&I1&I2&!I3&S1	0.0100	0.0010	0.4373	0.0546
S0(HL)	Z(LH)	I0&!I1&!I2&!I3&!S1	0.0100	0.0010	0.4518	0.0552
S0(HL)	Z(LH)	I0&!I1&!I2&I3&!S1	0.0100	0.0010	0.4396	0.0547
S0(HL)	Z(LH)	I0&!I1&I2&!I3&!S1	0.0100	0.0010	0.4610	0.0552
S0(HL)	Z(LH)	I0&!I1&I2&!I3&S1	0.0100	0.0010	0.4583	0.0551
S0(HL)	Z(LH)	I0&!I1&I2&I3&!S1	0.0100	0.0010	0.4493	0.0549
S0(HL)	Z(LH)	I0&I1&I2&!I3&S1	0.0100	0.0010	0.4467	0.0548
S0(HL)	Z(HL)	!I0&!I1&!I2&I3&S1	0.0100	0.0010	0.3947	0.0725
S0(HL)	Z(HL)	!I0&I1&!I2&!I3&!S1	0.0100	0.0010	0.3974	0.0723
S0(HL)	Z(HL)	!I0&I1&!I2&I3&!S1	0.0100	0.0010	0.3890	0.0721
S0(HL)	Z(HL)	!I0&I1&!I2&I3&S1	0.0100	0.0010	0.3866	0.0721
S0(HL)	Z(HL)	!I0&I1&I2&!I3&!S1	0.0100	0.0010	0.4039	0.0732
S0(HL)	Z(HL)	!I0&I1&I2&I3&!S1	0.0100	0.0010	0.3959	0.0726
S0(HL)	Z(HL)	I0&!I1&!I2&I3&S1	0.0100	0.0010	0.4005	0.0730
S0(HL)	Z(HL)	I0&I1&!I2&I3&S1	0.0100	0.0010	0.3931	0.0726
S0(LH)	Z(LH)	!I0&!I1&!I2&I3&S1	0.0100	0.0010	0.3235	0.0534
S0(LH)	Z(LH)	!I0&I1&!I2&!I3&!S1	0.0100	0.0010	0.3305	0.0535
S0(LH)	Z(LH)	!I0&I1&!I2&I3&!S1	0.0100	0.0010	0.3301	0.0536
S0(LH)	Z(LH)	!I0&I1&!I2&I3&S1	0.0100	0.0010	0.3230	0.0534
S0(LH)	Z(LH)	!I0&I1&I2&!I3&!S1	0.0100	0.0010	0.3306	0.0533
S0(LH)	Z(LH)	!I0&I1&I2&I3&!S1	0.0100	0.0010	0.3304	0.0535
S0(LH)	Z(LH)	I0&!I1&!I2&I3&S1	0.0100	0.0010	0.3237	0.0533
S0(LH)	Z(LH)	I0&I1&!I2&I3&S1	0.0100	0.0010	0.3236	0.0534
S0(LH)	Z(HL)	!I0&!I1&I2&!I3&S1	0.0100	0.0010	0.3649	0.0740
S0(LH)	Z(HL)	!I0&I1&I2&!I3&S1	0.0100	0.0010	0.3605	0.0736
S0(LH)	Z(HL)	I0&!I1&!I2&!I3&!S1	0.0100	0.0010	0.3653	0.0737
S0(LH)	Z(HL)	I0&!I1&!I2&I3&!S1	0.0100	0.0010	0.3606	0.0735
S0(LH)	Z(HL)	I0&!I1&I2&!I3&!S1	0.0100	0.0010	0.3671	0.0740
S0(LH)	Z(HL)	I0&!I1&I2&!I3&S1	0.0100	0.0010	0.3670	0.0739
S0(LH)	Z(HL)	I0&!I1&I2&I3&!S1	0.0100	0.0010	0.3654	0.0739
S0(LH)	Z(HL)	I0&I1&I2&!I3&S1	0.0100	0.0010	0.3651	0.0739
I3(LH)	Z(LH)	!I0&!I1&!I2&S0&S1	0.0100	0.0010	0.3534	0.0538
I3(LH)	Z(LH)	!I0&!I1&I2&S0&S1	0.0100	0.0010	0.3532	0.0536
I3(LH)	Z(LH)	!I0&I1&!I2&S0&S1	0.0100	0.0010	0.3534	0.0536
I3(LH)	Z(LH)	!I0&I1&I2&S0&S1	0.0100	0.0010	0.3534	0.0539
I3(LH)	Z(LH)	I0&!I1&!I2&S0&S1	0.0100	0.0010	0.3534	0.0539
I3(LH)	Z(LH)	I0&!I1&I2&S0&S1	0.0100	0.0010	0.3532	0.0536
I3(LH)	Z(LH)	I0&I1&!I2&S0&S1	0.0100	0.0010	0.3534	0.0537
I3(LH)	Z(LH)	I0&I1&I2&S0&S1	0.0100	0.0010	0.3534	0.0539
I3(HL)	Z(HL)	!I0&!I1&!I2&S0&S1	0.0100	0.0010	0.3820	0.0736

continues on next page

Table 208 – continued from previous page

I3(HL)	Z(HL)	!I0&!I1&I2&S0&S1	0.0100	0.0010	0.3820	0.0737
I3(HL)	Z(HL)	!I0&I1&!I2&S0&S1	0.0100	0.0010	0.3820	0.0737
I3(HL)	Z(HL)	!I0&I1&I2&S0&S1	0.0100	0.0010	0.3820	0.0737
I3(HL)	Z(HL)	I0&!I1&!I2&S0&S1	0.0100	0.0010	0.3820	0.0736
I3(HL)	Z(HL)	I0&!I1&I2&S0&S1	0.0100	0.0010	0.3820	0.0736
I3(HL)	Z(HL)	I0&I1&!I2&S0&S1	0.0100	0.0010	0.3820	0.0737
I3(HL)	Z(HL)	I0&I1&I2&S0&S1	0.0100	0.0010	0.3820	0.0737
S1(LH)	Z(HL)	!I0&I1&!I2&!I3&S0	0.0100	0.0010	0.2127	0.0599
S1(LH)	Z(HL)	!I0&I1&I2&!I3&S0	0.0100	0.0010	0.2127	0.0599
S1(LH)	Z(HL)	I0&!I1&!I2&!I3&!S0	0.0100	0.0010	0.2131	0.0601
S1(LH)	Z(HL)	I0&!I1&!I2&I3&!S0	0.0100	0.0010	0.2131	0.0601
S1(LH)	Z(HL)	I0&I1&!I2&!I3&!S0	0.0100	0.0010	0.2131	0.0601
S1(LH)	Z(HL)	I0&I1&!I2&!I3&S0	0.0100	0.0010	0.2127	0.0599
S1(LH)	Z(HL)	I0&I1&!I2&I3&!S0	0.0100	0.0010	0.2131	0.0601
S1(LH)	Z(HL)	I0&I1&I2&!I3&S0	0.0100	0.0010	0.2127	0.0599
S1(LH)	Z(LH)	!I0&!I1&!I2&I3&S0	0.0100	0.0010	0.1977	0.0510
S1(LH)	Z(LH)	!I0&!I1&I2&!I3&!S0	0.0100	0.0010	0.1973	0.0511
S1(LH)	Z(LH)	!I0&!I1&I2&I3&!S0	0.0100	0.0010	0.1973	0.0511
S1(LH)	Z(LH)	!I0&!I1&I2&I3&S0	0.0100	0.0010	0.1977	0.0510
S1(LH)	Z(LH)	!I0&I1&I2&!I3&!S0	0.0100	0.0010	0.1973	0.0511
S1(LH)	Z(LH)	!I0&I1&I2&I3&!S0	0.0100	0.0010	0.1973	0.0510
S1(LH)	Z(LH)	I0&!I1&!I2&I3&S0	0.0100	0.0010	0.1977	0.0510
S1(LH)	Z(LH)	I0&!I1&I2&I3&S0	0.0100	0.0010	0.1977	0.0512
S1(HL)	Z(HL)	!I0&!I1&!I2&I3&S0	0.0100	0.0010	0.2241	0.0532
S1(HL)	Z(HL)	!I0&!I1&I2&!I3&!S0	0.0100	0.0010	0.2240	0.0533
S1(HL)	Z(HL)	!I0&!I1&I2&I3&!S0	0.0100	0.0010	0.2240	0.0533
S1(HL)	Z(HL)	!I0&!I1&I2&I3&S0	0.0100	0.0010	0.2241	0.0532
S1(HL)	Z(HL)	!I0&I1&I2&!I3&!S0	0.0100	0.0010	0.2239	0.0532
S1(HL)	Z(HL)	!I0&I1&I2&I3&!S0	0.0100	0.0010	0.2239	0.0532
S1(HL)	Z(HL)	I0&!I1&!I2&I3&S0	0.0100	0.0010	0.2241	0.0532
S1(HL)	Z(HL)	I0&!I1&I2&I3&S0	0.0100	0.0010	0.2241	0.0532
S1(HL)	Z(LH)	!I0&I1&!I2&!I3&S0	0.0100	0.0010	0.2789	0.0513
S1(HL)	Z(LH)	!I0&I1&I2&!I3&S0	0.0100	0.0010	0.2789	0.0513
S1(HL)	Z(LH)	I0&!I1&!I2&!I3&!S0	0.0100	0.0010	0.2785	0.0510
S1(HL)	Z(LH)	I0&!I1&!I2&I3&!S0	0.0100	0.0010	0.2785	0.0510
S1(HL)	Z(LH)	I0&I1&!I2&!I3&!S0	0.0100	0.0010	0.2786	0.0512
S1(HL)	Z(LH)	I0&I1&!I2&!I3&S0	0.0100	0.0010	0.2789	0.0513
S1(HL)	Z(LH)	I0&I1&!I2&I3&!S0	0.0100	0.0010	0.2786	0.0512
S1(HL)	Z(LH)	I0&I1&I2&!I3&S0	0.0100	0.0010	0.2789	0.0513
I1(LH)	Z(LH)	!I0&!I2&!I3&S0&!S1	0.0100	0.0010	0.3561	0.0540
I1(LH)	Z(LH)	!I0&!I2&I3&S0&!S1	0.0100	0.0010	0.3562	0.0539
I1(LH)	Z(LH)	!I0&I2&!I3&S0&!S1	0.0100	0.0010	0.3561	0.0540
I1(LH)	Z(LH)	!I0&I2&I3&S0&!S1	0.0100	0.0010	0.3563	0.0538
I1(LH)	Z(LH)	I0&!I2&!I3&S0&!S1	0.0100	0.0010	0.3561	0.0540
I1(LH)	Z(LH)	I0&!I2&I3&S0&!S1	0.0100	0.0010	0.3561	0.0540
I1(LH)	Z(LH)	I0&I2&!I3&S0&!S1	0.0100	0.0010	0.3561	0.0539
I1(LH)	Z(LH)	I0&I2&I3&S0&!S1	0.0100	0.0010	0.3561	0.0540
I1(HL)	Z(HL)	!I0&!I2&!I3&S0&!S1	0.0100	0.0010	0.3811	0.0735
I1(HL)	Z(HL)	!I0&!I2&I3&S0&!S1	0.0100	0.0010	0.3811	0.0735
I1(HL)	Z(HL)	!I0&I2&!I3&S0&!S1	0.0100	0.0010	0.3811	0.0735
I1(HL)	Z(HL)	!I0&I2&I3&S0&!S1	0.0100	0.0010	0.3811	0.0735
I1(HL)	Z(HL)	I0&!I2&!I3&S0&!S1	0.0100	0.0010	0.3811	0.0735

continues on next page

Table 208 – continued from previous page

I1(HL)	Z(HL)	I0&!I2&I3&S0&!S1	0.0100	0.0010	0.3811	0.0735
I1(HL)	Z(HL)	I0&I2&!I3&S0&!S1	0.0100	0.0010	0.3811	0.0735
I1(HL)	Z(HL)	I0&I2&I3&S0&!S1	0.0100	0.0010	0.3811	0.0735
I0(LH)	Z(LH)	!I1&!I2&!I3&!S0&!S1	0.0100	0.0010	0.3626	0.0542
I0(LH)	Z(LH)	!I1&!I2&I3&!S0&!S1	0.0100	0.0010	0.3626	0.0542
I0(LH)	Z(LH)	!I1&I2&!I3&!S0&!S1	0.0100	0.0010	0.3626	0.0542
I0(LH)	Z(LH)	!I1&I2&I3&!S0&!S1	0.0100	0.0010	0.3626	0.0542
I0(LH)	Z(LH)	I1&!I2&!I3&!S0&!S1	0.0100	0.0010	0.3626	0.0542
I0(LH)	Z(LH)	I1&!I2&I3&!S0&!S1	0.0100	0.0010	0.3626	0.0542
I0(LH)	Z(LH)	I1&I2&!I3&!S0&!S1	0.0100	0.0010	0.3626	0.0542
I0(LH)	Z(LH)	I1&I2&I3&!S0&!S1	0.0100	0.0010	0.3626	0.0542
I0(HL)	Z(HL)	!I1&!I2&!I3&!S0&!S1	0.0100	0.0010	0.3836	0.0735
I0(HL)	Z(HL)	!I1&!I2&I3&!S0&!S1	0.0100	0.0010	0.3836	0.0735
I0(HL)	Z(HL)	!I1&I2&!I3&!S0&!S1	0.0100	0.0010	0.3836	0.0735
I0(HL)	Z(HL)	!I1&I2&I3&!S0&!S1	0.0100	0.0010	0.3836	0.0735
I0(HL)	Z(HL)	I1&!I2&!I3&!S0&!S1	0.0100	0.0010	0.3836	0.0735
I0(HL)	Z(HL)	I1&!I2&I3&!S0&!S1	0.0100	0.0010	0.3836	0.0735
I0(HL)	Z(HL)	I1&I2&!I3&!S0&!S1	0.0100	0.0010	0.3836	0.0735
I0(HL)	Z(HL)	I1&I2&I3&!S0&!S1	0.0100	0.0010	0.3836	0.0735

DYNAMIC ENERGY

Input Pin	When Condition	Tin (ns)	Output	Out Load (pf)	Energy (uW/MHz)
S1	!I0&I1&!I2&!I3&S0	0.0100	Z(HL)	0.0010	0.3127
S1	!I0&I1&I2&!I3&S0	0.0100	Z(HL)	0.0010	0.3127
S1	I0&!I1&!I2&!I3&!S0	0.0100	Z(HL)	0.0010	0.3131
S1	I0&!I1&!I2&I3&!S0	0.0100	Z(HL)	0.0010	0.3131
S1	I0&I1&!I2&!I3&!S0	0.0100	Z(HL)	0.0010	0.3131
S1	I0&I1&!I2&!I3&S0	0.0100	Z(HL)	0.0010	0.3127
S1	I0&I1&!I2&I3&!S0	0.0100	Z(HL)	0.0010	0.3131
S1	I0&I1&I2&!I3&S0	0.0100	Z(HL)	0.0010	0.3127
S1	!I0&!I1&!I2&I3&S0	0.0100	Z(HL)	0.0010	0.3951
S1	!I0&!I1&I2&!I3&!S0	0.0100	Z(HL)	0.0010	0.3951
S1	!I0&!I1&I2&I3&!S0	0.0100	Z(HL)	0.0010	0.3951
S1	!I0&!I1&I2&I3&S0	0.0100	Z(HL)	0.0010	0.3951
S1	!I0&I1&I2&!I3&!S0	0.0100	Z(HL)	0.0010	0.3951
S1	!I0&I1&I2&I3&!S0	0.0100	Z(HL)	0.0010	0.3951
S1	I0&!I1&!I2&I3&S0	0.0100	Z(HL)	0.0010	0.3951
S1	I0&!I1&I2&I3&S0	0.0100	Z(HL)	0.0010	0.3951
S1	!I0&!I1&!I2&I3&S0	0.0100	Z(LH)	0.0010	0.1439
S1	!I0&!I1&I2&!I3&!S0	0.0100	Z(LH)	0.0010	0.1439
S1	!I0&!I1&I2&I3&!S0	0.0100	Z(LH)	0.0010	0.1439
S1	!I0&!I1&I2&I3&S0	0.0100	Z(LH)	0.0010	0.1439
S1	!I0&I1&I2&!I3&!S0	0.0100	Z(LH)	0.0010	0.1438
S1	!I0&I1&I2&I3&!S0	0.0100	Z(LH)	0.0010	0.1438
S1	I0&!I1&!I2&I3&S0	0.0100	Z(LH)	0.0010	0.1439
S1	I0&!I1&I2&I3&S0	0.0100	Z(LH)	0.0010	0.1439

continues on next page

Table 209 – continued from previous page

S1	!I0&I1&!I2&!I3&S0	0.0100	Z(LH)	0.0010	0.3494
S1	!I0&I1&I2&!I3&S0	0.0100	Z(LH)	0.0010	0.3494
S1	I0&!I1&!I2&!I3&!S0	0.0100	Z(LH)	0.0010	0.3493
S1	I0&!I1&!I2&I3&!S0	0.0100	Z(LH)	0.0010	0.3493
S1	I0&I1&!I2&!I3&!S0	0.0100	Z(LH)	0.0010	0.3494
S1	I0&I1&!I2&!I3&S0	0.0100	Z(LH)	0.0010	0.3494
S1	I0&I1&!I2&I3&!S0	0.0100	Z(LH)	0.0010	0.3494
S1	I0&I1&I2&!I3&S0	0.0100	Z(LH)	0.0010	0.3494
I0	!I1&!I2&!I3&!S0&!S1	0.0100	Z(LH)	0.0010	0.2643
I0	!I1&!I2&I3&!S0&!S1	0.0100	Z(LH)	0.0010	0.2643
I0	!I1&I2&!I3&!S0&!S1	0.0100	Z(LH)	0.0010	0.2643
I0	!I1&I2&I3&!S0&!S1	0.0100	Z(LH)	0.0010	0.2643
I0	I1&!I2&!I3&!S0&!S1	0.0100	Z(LH)	0.0010	0.2643
I0	I1&!I2&I3&!S0&!S1	0.0100	Z(LH)	0.0010	0.2643
I0	I1&I2&!I3&!S0&!S1	0.0100	Z(LH)	0.0010	0.2643
I0	I1&I2&I3&!S0&!S1	0.0100	Z(LH)	0.0010	0.2643
I3	!I0&!I1&!I2&S0&S1	0.0100	Z(LH)	0.0010	0.2136
I3	!I0&!I1&I2&S0&S1	0.0100	Z(LH)	0.0010	0.2133
I3	!I0&I1&!I2&S0&S1	0.0100	Z(LH)	0.0010	0.2136
I3	!I0&I1&I2&S0&S1	0.0100	Z(LH)	0.0010	0.2135
I3	I0&!I1&!I2&S0&S1	0.0100	Z(LH)	0.0010	0.2135
I3	I0&!I1&I2&S0&S1	0.0100	Z(LH)	0.0010	0.2133
I3	I0&I1&!I2&S0&S1	0.0100	Z(LH)	0.0010	0.2136
I3	I0&I1&I2&S0&S1	0.0100	Z(LH)	0.0010	0.2135
I2	!I0&!I1&!I3&!S0&S1	0.0100	Z(HL)	0.0010	0.5410
I2	!I0&!I1&I3&!S0&S1	0.0100	Z(HL)	0.0010	0.5410
I2	!I0&I1&!I3&!S0&S1	0.0100	Z(HL)	0.0010	0.5410
I2	!I0&I1&I3&!S0&S1	0.0100	Z(HL)	0.0010	0.5410
I2	I0&!I1&!I3&!S0&S1	0.0100	Z(HL)	0.0010	0.5410
I2	I0&!I1&I3&!S0&S1	0.0100	Z(HL)	0.0010	0.5411
I2	I0&I1&!I3&!S0&S1	0.0100	Z(HL)	0.0010	0.5410
I2	I0&I1&I3&!S0&S1	0.0100	Z(HL)	0.0010	0.5411
I1	!I0&!I2&!I3&S0&!S1	0.0100	Z(LH)	0.0010	0.2383
I1	!I0&!I2&I3&S0&!S1	0.0100	Z(LH)	0.0010	0.2384
I1	!I0&I2&!I3&S0&!S1	0.0100	Z(LH)	0.0010	0.2383
I1	!I0&I2&I3&S0&!S1	0.0100	Z(LH)	0.0010	0.2385
I1	I0&!I2&!I3&S0&!S1	0.0100	Z(LH)	0.0010	0.2383
I1	I0&!I2&I3&S0&!S1	0.0100	Z(LH)	0.0010	0.2384
I1	I0&I2&!I3&S0&!S1	0.0100	Z(LH)	0.0010	0.2385
I1	I0&I2&I3&S0&!S1	0.0100	Z(LH)	0.0010	0.2384
I3	!I0&!I1&!I2&S0&S1	0.0100	Z(HL)	0.0010	0.5643
I3	!I0&!I1&I2&S0&S1	0.0100	Z(HL)	0.0010	0.5642
I3	!I0&I1&!I2&S0&S1	0.0100	Z(HL)	0.0010	0.5642
I3	!I0&I1&I2&S0&S1	0.0100	Z(HL)	0.0010	0.5642
I3	I0&!I1&!I2&S0&S1	0.0100	Z(HL)	0.0010	0.5643
I3	I0&!I1&I2&S0&S1	0.0100	Z(HL)	0.0010	0.5643
I3	I0&I1&!I2&S0&S1	0.0100	Z(HL)	0.0010	0.5642
I3	I0&I1&I2&S0&S1	0.0100	Z(HL)	0.0010	0.5642
I0	!I1&!I2&!I3&!S0&!S1	0.0100	Z(HL)	0.0010	0.5242
I0	!I1&!I2&I3&!S0&!S1	0.0100	Z(HL)	0.0010	0.5242
I0	!I1&I2&!I3&!S0&!S1	0.0100	Z(HL)	0.0010	0.5242
I0	!I1&I2&I3&!S0&!S1	0.0100	Z(HL)	0.0010	0.5242

continues on next page

Table 209 – continued from previous page

I0	I1&!I2&!I3&!S0&!S1	0.0100	Z(HL)	0.0010	0.5242
I0	I1&!I2&I3&!S0&!S1	0.0100	Z(HL)	0.0010	0.5242
I0	I1&I2&!I3&!S0&!S1	0.0100	Z(HL)	0.0010	0.5242
I0	I1&I2&I3&!S0&!S1	0.0100	Z(HL)	0.0010	0.5242
S0	!I0&!I1&I2&!I3&S1	0.0100	Z(LH)	0.0010	0.5338
S0	!I0&I1&I2&!I3&S1	0.0100	Z(LH)	0.0010	0.6521
S0	I0&!I1&!I2&!I3&!S1	0.0100	Z(LH)	0.0010	0.5573
S0	I0&!I1&!I2&I3&!S1	0.0100	Z(LH)	0.0010	0.6689
S0	I0&!I1&I2&!I3&!S1	0.0100	Z(LH)	0.0010	0.6657
S0	I0&!I1&I2&!I3&S1	0.0100	Z(LH)	0.0010	0.6367
S0	I0&!I1&I2&I3&!S1	0.0100	Z(LH)	0.0010	0.5544
S0	I0&I1&I2&!I3&S1	0.0100	Z(LH)	0.0010	0.5307
S0	!I0&!I1&!I2&I3&S1	0.0100	Z(LH)	0.0010	0.1987
S0	!I0&I1&!I2&!I3&!S1	0.0100	Z(LH)	0.0010	0.2242
S0	!I0&I1&!I2&I3&!S1	0.0100	Z(LH)	0.0010	0.2583
S0	!I0&I1&!I2&I3&S1	0.0100	Z(LH)	0.0010	0.2293
S0	!I0&I1&I2&!I3&!S1	0.0100	Z(LH)	0.0010	0.4250
S0	!I0&I1&I2&I3&!S1	0.0100	Z(LH)	0.0010	0.2243
S0	I0&!I1&!I2&I3&S1	0.0100	Z(LH)	0.0010	0.4025
S0	I0&I1&!I2&I3&S1	0.0100	Z(LH)	0.0010	0.1989
I2	!I0&!I1&!I3&!S0&S1	0.0100	Z(LH)	0.0010	0.2458
I2	!I0&!I1&I3&!S0&S1	0.0100	Z(LH)	0.0010	0.2458
I2	!I0&I1&!I3&!S0&S1	0.0100	Z(LH)	0.0010	0.2458
I2	!I0&I1&I3&!S0&S1	0.0100	Z(LH)	0.0010	0.2458
I2	I0&!I1&!I3&!S0&S1	0.0100	Z(LH)	0.0010	0.2458
I2	I0&!I1&I3&!S0&S1	0.0100	Z(LH)	0.0010	0.2458
I2	I0&I1&!I3&!S0&S1	0.0100	Z(LH)	0.0010	0.2458
I2	I0&I1&I3&!S0&S1	0.0100	Z(LH)	0.0010	0.2458
S0	!I0&!I1&!I2&I3&S1	0.0100	Z(HL)	0.0010	0.7062
S0	!I0&I1&!I2&!I3&!S1	0.0100	Z(HL)	0.0010	0.6845
S0	!I0&I1&!I2&I3&!S1	0.0100	Z(HL)	0.0010	0.7993
S0	!I0&I1&!I2&I3&S1	0.0100	Z(HL)	0.0010	0.8279
S0	!I0&I1&I2&!I3&!S1	0.0100	Z(HL)	0.0010	0.7851
S0	!I0&I1&I2&I3&!S1	0.0100	Z(HL)	0.0010	0.6826
S0	I0&!I1&!I2&I3&S1	0.0100	Z(HL)	0.0010	0.8013
S0	I0&I1&!I2&I3&S1	0.0100	Z(HL)	0.0010	0.7040
S0	!I0&!I1&I2&!I3&S1	0.0100	Z(HL)	0.0010	0.5224
S0	!I0&I1&I2&!I3&S1	0.0100	Z(HL)	0.0010	0.5483
S0	I0&!I1&!I2&!I3&!S1	0.0100	Z(HL)	0.0010	0.4978
S0	I0&!I1&!I2&I3&!S1	0.0100	Z(HL)	0.0010	0.5267
S0	I0&!I1&I2&!I3&!S1	0.0100	Z(HL)	0.0010	0.7056
S0	I0&!I1&I2&!I3&S1	0.0100	Z(HL)	0.0010	0.7338
S0	I0&!I1&I2&I3&!S1	0.0100	Z(HL)	0.0010	0.4981
S0	I0&I1&I2&!I3&S1	0.0100	Z(HL)	0.0010	0.5229
I1	!I0&!I2&!I3&S0&!S1	0.0100	Z(HL)	0.0010	0.5409
I1	!I0&!I2&I3&S0&!S1	0.0100	Z(HL)	0.0010	0.5409
I1	!I0&I2&!I3&S0&!S1	0.0100	Z(HL)	0.0010	0.5409
I1	!I0&I2&I3&S0&!S1	0.0100	Z(HL)	0.0010	0.5409
I1	I0&!I2&!I3&S0&!S1	0.0100	Z(HL)	0.0010	0.5409
I1	I0&!I2&I3&S0&!S1	0.0100	Z(HL)	0.0010	0.5409
I1	I0&I2&!I3&S0&!S1	0.0100	Z(HL)	0.0010	0.5409
I1	I0&I2&I3&S0&!S1	0.0100	Z(HL)	0.0010	0.5409

continues on next page

Table 209 – continued from previous page

I3(HL)	!I0&!I1&!I2&!S0&!S1	0.0100	n/a	n/a	0.0838
I3(HL)	!I0&!I1&!I2&!S0&S1	0.0100	n/a	n/a	0.0838
I3(HL)	!I0&!I1&!I2&S0&!S1	0.0100	n/a	n/a	0.2381
I3(HL)	!I0&!I1&I2&!S0&!S1	0.0100	n/a	n/a	0.0839
I3(HL)	!I0&!I1&I2&S0&!S1	0.0100	n/a	n/a	0.2381
I3(HL)	!I0&I1&!I2&!S0&!S1	0.0100	n/a	n/a	0.0838
I3(HL)	!I0&I1&!I2&!S0&S1	0.0100	n/a	n/a	0.0838
I3(HL)	!I0&I1&I2&!S0&!S1	0.0100	n/a	n/a	0.0839
I3(HL)	I0&!I1&!I2&!S0&S1	0.0100	n/a	n/a	0.0838
I3(HL)	I0&!I1&!I2&S0&!S1	0.0100	n/a	n/a	0.2381
I3(HL)	I0&!I1&I2&S0&!S1	0.0100	n/a	n/a	0.2381
I3(HL)	I0&I1&!I2&!S0&S1	0.0100	n/a	n/a	0.0838
I3(HL)	!I0&!I1&I2&!S0&S1	0.0100	n/a	n/a	0.0838
I3(HL)	!I0&I1&!I2&S0&!S1	0.0100	n/a	n/a	0.2380
I3(HL)	!I0&I1&I2&!S0&S1	0.0100	n/a	n/a	0.0838
I3(HL)	!I0&I1&I2&S0&!S1	0.0100	n/a	n/a	0.2380
I3(HL)	I0&!I1&!I2&!S0&!S1	0.0100	n/a	n/a	0.0838
I3(HL)	I0&!I1&I2&!S0&!S1	0.0100	n/a	n/a	0.0838
I3(HL)	I0&!I1&I2&!S0&S1	0.0100	n/a	n/a	0.0838
I3(HL)	I0&I1&!I2&!S0&!S1	0.0100	n/a	n/a	0.0838
I3(HL)	I0&I1&!I2&S0&!S1	0.0100	n/a	n/a	0.2380
I3(HL)	I0&I1&I2&!S0&!S1	0.0100	n/a	n/a	0.0838
I3(HL)	I0&I1&I2&!S0&S1	0.0100	n/a	n/a	0.0838
I3(HL)	I0&I1&I2&S0&!S1	0.0100	n/a	n/a	0.2380
I2(LH)	!I0&!I1&!I3&!S0&!S1	0.0100	n/a	n/a	0.0795
I2(LH)	!I0&!I1&!I3&S0&!S1	0.0100	n/a	n/a	0.0095
I2(LH)	!I0&!I1&!I3&S0&S1	0.0100	n/a	n/a	0.0095
I2(LH)	!I0&!I1&I3&!S0&!S1	0.0100	n/a	n/a	0.0795
I2(LH)	!I0&!I1&I3&S0&!S1	0.0100	n/a	n/a	0.0095
I2(LH)	!I0&I1&!I3&!S0&!S1	0.0100	n/a	n/a	0.0795
I2(LH)	!I0&I1&!I3&S0&S1	0.0100	n/a	n/a	0.0095
I2(LH)	!I0&I1&I3&!S0&!S1	0.0100	n/a	n/a	0.0795
I2(LH)	I0&!I1&!I3&S0&!S1	0.0100	n/a	n/a	0.0095
I2(LH)	I0&!I1&!I3&S0&S1	0.0100	n/a	n/a	0.0095
I2(LH)	I0&!I1&I3&S0&!S1	0.0100	n/a	n/a	0.0095
I2(LH)	I0&I1&!I3&S0&S1	0.0100	n/a	n/a	0.0095
I2(LH)	!I0&!I1&I3&S0&S1	0.0100	n/a	n/a	0.0095
I2(LH)	!I0&I1&!I3&S0&!S1	0.0100	n/a	n/a	0.0095
I2(LH)	!I0&I1&I3&S0&!S1	0.0100	n/a	n/a	0.0095
I2(LH)	!I0&I1&I3&S0&S1	0.0100	n/a	n/a	0.0095
I2(LH)	I0&!I1&!I3&!S0&!S1	0.0100	n/a	n/a	0.0795
I2(LH)	I0&!I1&I3&!S0&!S1	0.0100	n/a	n/a	0.0795
I2(LH)	I0&!I1&I3&S0&S1	0.0100	n/a	n/a	0.0095
I2(LH)	I0&I1&!I3&!S0&!S1	0.0100	n/a	n/a	0.0795
I2(LH)	I0&I1&!I3&S0&!S1	0.0100	n/a	n/a	0.0095
I2(LH)	I0&I1&I3&!S0&!S1	0.0100	n/a	n/a	0.0795
I2(LH)	I0&I1&I3&S0&!S1	0.0100	n/a	n/a	0.0095
I2(LH)	I0&I1&I3&S0&S1	0.0100	n/a	n/a	0.0095
I1(LH)	!I0&!I2&!I3&!S0&!S1	0.0100	n/a	n/a	0.0060
I1(LH)	!I0&!I2&!I3&!S0&S1	0.0100	n/a	n/a	0.0060
I1(LH)	!I0&!I2&!I3&S0&S1	0.0100	n/a	n/a	0.0438
I1(LH)	!I0&!I2&I3&!S0&!S1	0.0100	n/a	n/a	0.0060

continues on next page

Table 209 – continued from previous page

I1(LH)	!I0&!I2&I3&!S0&S1	0.0100	n/a	n/a	0.0060
I1(LH)	!I0&I2&!I3&!S0&!S1	0.0100	n/a	n/a	0.0060
I1(LH)	!I0&I2&!I3&S0&S1	0.0100	n/a	n/a	0.0439
I1(LH)	!I0&I2&I3&!S0&!S1	0.0100	n/a	n/a	0.0060
I1(LH)	I0&!I2&!I3&!S0&S1	0.0100	n/a	n/a	0.0060
I1(LH)	I0&!I2&!I3&S0&S1	0.0100	n/a	n/a	0.0438
I1(LH)	I0&!I2&I3&!S0&S1	0.0100	n/a	n/a	0.0060
I1(LH)	I0&I2&!I3&S0&S1	0.0100	n/a	n/a	0.0438
I1(LH)	!I0&!I2&I3&S0&S1	0.0100	n/a	n/a	0.0439
I1(LH)	!I0&I2&!I3&!S0&S1	0.0100	n/a	n/a	0.0060
I1(LH)	!I0&I2&I3&!S0&S1	0.0100	n/a	n/a	0.0060
I1(LH)	!I0&I2&I3&S0&S1	0.0100	n/a	n/a	0.0439
I1(LH)	I0&!I2&!I3&!S0&!S1	0.0100	n/a	n/a	0.0060
I1(LH)	I0&!I2&I3&!S0&!S1	0.0100	n/a	n/a	0.0060
I1(LH)	I0&!I2&I3&S0&S1	0.0100	n/a	n/a	0.0439
I1(LH)	I0&I2&!I3&!S0&!S1	0.0100	n/a	n/a	0.0060
I1(LH)	I0&I2&!I3&!S0&S1	0.0100	n/a	n/a	0.0061
I1(LH)	I0&I2&I3&!S0&!S1	0.0100	n/a	n/a	0.0060
I1(LH)	I0&I2&I3&!S0&S1	0.0100	n/a	n/a	0.0061
I1(LH)	I0&I2&I3&S0&S1	0.0100	n/a	n/a	0.0439
S0(HL)	!I0&!I1&!I2&!I3&!S1	0.0100	n/a	n/a	0.2646
S0(HL)	!I0&!I1&!I2&!I3&S1	0.0100	n/a	n/a	0.2647
S0(HL)	!I0&!I1&!I2&I3&!S1	0.0100	n/a	n/a	0.3811
S0(HL)	!I0&!I1&I2&!I3&!S1	0.0100	n/a	n/a	0.3668
S0(HL)	!I0&!I1&I2&I3&!S1	0.0100	n/a	n/a	0.2627
S0(HL)	!I0&I1&!I2&!I3&S1	0.0100	n/a	n/a	0.3880
S0(HL)	I0&!I1&!I2&!I3&S1	0.0100	n/a	n/a	0.3612
S0(HL)	I0&I1&!I2&!I3&S1	0.0100	n/a	n/a	0.2626
S0(HL)	!I0&!I1&I2&I3&S1	0.0100	n/a	n/a	0.2626
S0(HL)	!I0&I1&I2&I3&S1	0.0100	n/a	n/a	0.3862
S0(HL)	I0&!I1&I2&I3&S1	0.0100	n/a	n/a	0.3581
S0(HL)	I0&I1&!I2&!I3&!S1	0.0100	n/a	n/a	0.2626
S0(HL)	I0&I1&!I2&I3&!S1	0.0100	n/a	n/a	0.3792
S0(HL)	I0&I1&I2&!I3&!S1	0.0100	n/a	n/a	0.3635
S0(HL)	I0&I1&I2&I3&!S1	0.0100	n/a	n/a	0.2608
S0(HL)	I0&I1&I2&I3&S1	0.0100	n/a	n/a	0.2608
I1(HL)	!I0&!I2&!I3&!S0&!S1	0.0100	n/a	n/a	0.0819
I1(HL)	!I0&!I2&!I3&!S0&S1	0.0100	n/a	n/a	0.0819
I1(HL)	!I0&!I2&!I3&S0&S1	0.0100	n/a	n/a	0.2433
I1(HL)	!I0&!I2&I3&!S0&!S1	0.0100	n/a	n/a	0.0819
I1(HL)	!I0&!I2&I3&!S0&S1	0.0100	n/a	n/a	0.0819
I1(HL)	!I0&I2&!I3&!S0&!S1	0.0100	n/a	n/a	0.0819
I1(HL)	!I0&I2&!I3&S0&S1	0.0100	n/a	n/a	0.2433
I1(HL)	!I0&I2&I3&!S0&!S1	0.0100	n/a	n/a	0.0819
I1(HL)	I0&!I2&!I3&!S0&S1	0.0100	n/a	n/a	0.0818
I1(HL)	I0&!I2&!I3&S0&S1	0.0100	n/a	n/a	0.2433
I1(HL)	I0&!I2&I3&!S0&S1	0.0100	n/a	n/a	0.0818
I1(HL)	I0&I2&!I3&S0&S1	0.0100	n/a	n/a	0.2433
I1(HL)	!I0&!I2&I3&S0&S1	0.0100	n/a	n/a	0.2433
I1(HL)	!I0&I2&!I3&!S0&S1	0.0100	n/a	n/a	0.0818
I1(HL)	!I0&I2&I3&!S0&S1	0.0100	n/a	n/a	0.0818
I1(HL)	!I0&I2&I3&S0&S1	0.0100	n/a	n/a	0.2433

continues on next page

Table 209 – continued from previous page

I1(HL)	I0&!I2&!I3&!S0&!S1	0.0100	n/a	n/a	0.0819
I1(HL)	I0&!I2&I3&!S0&!S1	0.0100	n/a	n/a	0.0819
I1(HL)	I0&!I2&I3&S0&S1	0.0100	n/a	n/a	0.2433
I1(HL)	I0&I2&!I3&!S0&!S1	0.0100	n/a	n/a	0.0819
I1(HL)	I0&I2&!I3&!S0&S1	0.0100	n/a	n/a	0.0818
I1(HL)	I0&I2&I3&!S0&!S1	0.0100	n/a	n/a	0.0819
I1(HL)	I0&I2&I3&!S0&S1	0.0100	n/a	n/a	0.0818
I1(HL)	I0&I2&I3&S0&S1	0.0100	n/a	n/a	0.2433
I3(LH)	!I0&!I1&!I2&!S0&!S1	0.0100	n/a	n/a	0.0065
I3(LH)	!I0&!I1&!I2&!S0&S1	0.0100	n/a	n/a	0.0065
I3(LH)	!I0&!I1&!I2&S0&!S1	0.0100	n/a	n/a	0.0478
I3(LH)	!I0&!I1&I2&!S0&!S1	0.0100	n/a	n/a	0.0065
I3(LH)	!I0&!I1&I2&S0&!S1	0.0100	n/a	n/a	0.0478
I3(LH)	!I0&I1&!I2&!S0&!S1	0.0100	n/a	n/a	0.0065
I3(LH)	!I0&I1&!I2&!S0&S1	0.0100	n/a	n/a	0.0065
I3(LH)	!I0&I1&I2&!S0&!S1	0.0100	n/a	n/a	0.0065
I3(LH)	I0&!I1&!I2&!S0&S1	0.0100	n/a	n/a	0.0065
I3(LH)	I0&!I1&!I2&S0&!S1	0.0100	n/a	n/a	0.0478
I3(LH)	I0&!I1&I2&S0&!S1	0.0100	n/a	n/a	0.0478
I3(LH)	I0&I1&!I2&!S0&S1	0.0100	n/a	n/a	0.0065
I3(LH)	!I0&!I1&I2&!S0&S1	0.0100	n/a	n/a	0.0065
I3(LH)	!I0&I1&!I2&S0&!S1	0.0100	n/a	n/a	0.0478
I3(LH)	!I0&I1&I2&!S0&S1	0.0100	n/a	n/a	0.0065
I3(LH)	!I0&I1&I2&S0&!S1	0.0100	n/a	n/a	0.0478
I3(LH)	I0&!I1&!I2&!S0&!S1	0.0100	n/a	n/a	0.0065
I3(LH)	I0&!I1&I2&!S0&!S1	0.0100	n/a	n/a	0.0065
I3(LH)	I0&!I1&I2&!S0&S1	0.0100	n/a	n/a	0.0065
I3(LH)	I0&I1&!I2&!S0&!S1	0.0100	n/a	n/a	0.0065
I3(LH)	I0&I1&!I2&S0&!S1	0.0100	n/a	n/a	0.0478
I3(LH)	I0&I1&I2&!S0&!S1	0.0100	n/a	n/a	0.0065
I3(LH)	I0&I1&I2&!S0&S1	0.0100	n/a	n/a	0.0065
I0(HL)	!I1&!I2&!I3&!S0&S1	0.0100	n/a	n/a	0.2263
I0(HL)	!I1&!I2&!I3&S0&!S1	0.0100	n/a	n/a	0.0937
I0(HL)	!I1&!I2&!I3&S0&S1	0.0100	n/a	n/a	0.0937
I0(HL)	!I1&!I2&I3&!S0&S1	0.0100	n/a	n/a	0.2263
I0(HL)	!I1&!I2&I3&S0&!S1	0.0100	n/a	n/a	0.0937
I0(HL)	!I1&I2&!I3&S0&!S1	0.0100	n/a	n/a	0.0937
I0(HL)	!I1&I2&!I3&S0&S1	0.0100	n/a	n/a	0.0937
I0(HL)	!I1&I2&I3&S0&!S1	0.0100	n/a	n/a	0.0937
I0(HL)	I1&!I2&!I3&!S0&S1	0.0100	n/a	n/a	0.2263
I0(HL)	I1&!I2&!I3&S0&S1	0.0100	n/a	n/a	0.0937
I0(HL)	I1&!I2&I3&!S0&S1	0.0100	n/a	n/a	0.2263
I0(HL)	I1&I2&!I3&S0&S1	0.0100	n/a	n/a	0.0937
I0(HL)	!I1&!I2&I3&S0&S1	0.0100	n/a	n/a	0.0937
I0(HL)	!I1&I2&!I3&!S0&S1	0.0100	n/a	n/a	0.2263
I0(HL)	!I1&I2&I3&!S0&S1	0.0100	n/a	n/a	0.2263
I0(HL)	!I1&I2&I3&S0&S1	0.0100	n/a	n/a	0.0937
I0(HL)	I1&!I2&!I3&S0&!S1	0.0100	n/a	n/a	0.0937
I0(HL)	I1&!I2&I3&S0&!S1	0.0100	n/a	n/a	0.0937
I0(HL)	I1&!I2&I3&S0&S1	0.0100	n/a	n/a	0.0937
I0(HL)	I1&I2&!I3&!S0&S1	0.0100	n/a	n/a	0.2263

continues on next page

Table 209 – continued from previous page

I0(HL)	I1&I2&!I3&S0&!S1	0.0100	n/a	n/a	0.0937
I0(HL)	I1&I2&I3&!S0&S1	0.0100	n/a	n/a	0.2263
I0(HL)	I1&I2&I3&S0&!S1	0.0100	n/a	n/a	0.0937
I0(HL)	I1&I2&I3&S0&S1	0.0100	n/a	n/a	0.0937
S1(HL)	!I0&!I1&!I2&!I3&!S0	0.0100	n/a	n/a	0.1524
S1(HL)	!I0&!I1&!I2&!I3&S0	0.0100	n/a	n/a	0.1524
S1(HL)	!I0&!I1&!I2&I3&!S0	0.0100	n/a	n/a	0.1524
S1(HL)	!I0&!I1&I2&!I3&S0	0.0100	n/a	n/a	0.1524
S1(HL)	!I0&I1&!I2&!I3&!S0	0.0100	n/a	n/a	0.1524
S1(HL)	!I0&I1&!I2&I3&!S0	0.0100	n/a	n/a	0.1524
S1(HL)	I0&!I1&!I2&!I3&S0	0.0100	n/a	n/a	0.1524
S1(HL)	I0&!I1&I2&!I3&S0	0.0100	n/a	n/a	0.1524
S1(HL)	!I0&I1&!I2&I3&S0	0.0100	n/a	n/a	0.1506
S1(HL)	!I0&I1&I2&I3&S0	0.0100	n/a	n/a	0.1506
S1(HL)	I0&!I1&I2&!I3&!S0	0.0100	n/a	n/a	0.1506
S1(HL)	I0&!I1&I2&I3&!S0	0.0100	n/a	n/a	0.1506
S1(HL)	I0&I1&!I2&I3&S0	0.0100	n/a	n/a	0.1506
S1(HL)	I0&I1&I2&!I3&!S0	0.0100	n/a	n/a	0.1506
S1(HL)	I0&I1&I2&I3&!S0	0.0100	n/a	n/a	0.1506
S1(HL)	I0&I1&I2&I3&S0	0.0100	n/a	n/a	0.1506
I0(LH)	!I1&!I2&!I3&!S0&S1	0.0100	n/a	n/a	0.0692
I0(LH)	!I1&!I2&!I3&S0&!S1	0.0100	n/a	n/a	0.0027
I0(LH)	!I1&!I2&!I3&S0&S1	0.0100	n/a	n/a	0.0027
I0(LH)	!I1&!I2&I3&!S0&S1	0.0100	n/a	n/a	0.0692
I0(LH)	!I1&!I2&I3&S0&!S1	0.0100	n/a	n/a	0.0027
I0(LH)	!I1&I2&!I3&S0&!S1	0.0100	n/a	n/a	0.0027
I0(LH)	!I1&I2&!I3&S0&S1	0.0100	n/a	n/a	0.0027
I0(LH)	!I1&I2&I3&S0&!S1	0.0100	n/a	n/a	0.0027
I0(LH)	I1&!I2&!I3&!S0&S1	0.0100	n/a	n/a	0.0692
I0(LH)	I1&!I2&!I3&S0&S1	0.0100	n/a	n/a	0.0027
I0(LH)	I1&!I2&I3&!S0&S1	0.0100	n/a	n/a	0.0692
I0(LH)	I1&I2&!I3&S0&S1	0.0100	n/a	n/a	0.0027
I0(LH)	!I1&!I2&I3&S0&S1	0.0100	n/a	n/a	0.0027
I0(LH)	!I1&I2&!I3&!S0&S1	0.0100	n/a	n/a	0.0692
I0(LH)	!I1&I2&I3&!S0&S1	0.0100	n/a	n/a	0.0692
I0(LH)	!I1&I2&I3&S0&S1	0.0100	n/a	n/a	0.0027
I0(LH)	I1&!I2&!I3&S0&!S1	0.0100	n/a	n/a	0.0027
I0(LH)	I1&!I2&I3&S0&!S1	0.0100	n/a	n/a	0.0027
I0(LH)	I1&!I2&I3&S0&S1	0.0100	n/a	n/a	0.0027
I0(LH)	I1&I2&!I3&!S0&S1	0.0100	n/a	n/a	0.0692
I0(LH)	I1&I2&!I3&S0&!S1	0.0100	n/a	n/a	0.0027
I0(LH)	I1&I2&I3&!S0&S1	0.0100	n/a	n/a	0.0692
I0(LH)	I1&I2&I3&S0&!S1	0.0100	n/a	n/a	0.0027
I0(LH)	I1&I2&I3&S0&S1	0.0100	n/a	n/a	0.0027
S0(LH)	!I0&!I1&!I2&!I3&!S1	0.0100	n/a	n/a	0.0003
S0(LH)	!I0&!I1&!I2&!I3&S1	0.0100	n/a	n/a	0.0003
S0(LH)	!I0&!I1&!I2&I3&!S1	0.0100	n/a	n/a	0.0342
S0(LH)	!I0&!I1&I2&!I3&!S1	0.0100	n/a	n/a	0.2049
S0(LH)	!I0&!I1&I2&I3&!S1	0.0100	n/a	n/a	0.0003
S0(LH)	!I0&I1&!I2&!I3&S1	0.0100	n/a	n/a	0.0308
S0(LH)	I0&!I1&!I2&!I3&S1	0.0100	n/a	n/a	0.2082
S0(LH)	I0&I1&!I2&!I3&S1	0.0100	n/a	n/a	0.0003

continues on next page

Table 209 – continued from previous page

S0(LH)	!I0&!I1&I2&I3&S1	0.0100	n/a	n/a	0.0003
S0(LH)	!I0&I1&I2&I3&S1	0.0100	n/a	n/a	0.0308
S0(LH)	I0&!I1&I2&I3&S1	0.0100	n/a	n/a	0.2088
S0(LH)	I0&I1&!I2&!I3&!S1	0.0100	n/a	n/a	0.0003
S0(LH)	I0&I1&!I2&I3&!S1	0.0100	n/a	n/a	0.0342
S0(LH)	I0&I1&I2&!I3&!S1	0.0100	n/a	n/a	0.2055
S0(LH)	I0&I1&I2&I3&!S1	0.0100	n/a	n/a	0.0003
S0(LH)	I0&I1&I2&I3&S1	0.0100	n/a	n/a	0.0003
I2(HL)	!I0&!I1&!I3&!S0&!S1	0.0100	n/a	n/a	0.2146
I2(HL)	!I0&!I1&!I3&S0&!S1	0.0100	n/a	n/a	0.0892
I2(HL)	!I0&!I1&!I3&S0&S1	0.0100	n/a	n/a	0.0892
I2(HL)	!I0&!I1&I3&!S0&!S1	0.0100	n/a	n/a	0.2146
I2(HL)	!I0&!I1&I3&S0&!S1	0.0100	n/a	n/a	0.0892
I2(HL)	!I0&I1&!I3&!S0&!S1	0.0100	n/a	n/a	0.2146
I2(HL)	!I0&I1&!I3&S0&S1	0.0100	n/a	n/a	0.0892
I2(HL)	!I0&I1&I3&!S0&!S1	0.0100	n/a	n/a	0.2146
I2(HL)	I0&!I1&!I3&S0&!S1	0.0100	n/a	n/a	0.0892
I2(HL)	I0&!I1&!I3&S0&S1	0.0100	n/a	n/a	0.0892
I2(HL)	I0&!I1&I3&S0&!S1	0.0100	n/a	n/a	0.0892
I2(HL)	I0&I1&!I3&S0&S1	0.0100	n/a	n/a	0.0892
I2(HL)	!I0&!I1&I3&S0&S1	0.0100	n/a	n/a	0.0892
I2(HL)	!I0&I1&!I3&S0&!S1	0.0100	n/a	n/a	0.0892
I2(HL)	!I0&I1&I3&S0&!S1	0.0100	n/a	n/a	0.0892
I2(HL)	!I0&I1&I3&S0&S1	0.0100	n/a	n/a	0.0892
I2(HL)	I0&!I1&!I3&!S0&!S1	0.0100	n/a	n/a	0.2146
I2(HL)	I0&!I1&I3&!S0&!S1	0.0100	n/a	n/a	0.2146
I2(HL)	I0&!I1&I3&S0&S1	0.0100	n/a	n/a	0.0892
I2(HL)	I0&I1&!I3&!S0&!S1	0.0100	n/a	n/a	0.2146
I2(HL)	I0&I1&!I3&S0&!S1	0.0100	n/a	n/a	0.0892
I2(HL)	I0&I1&I3&!S0&!S1	0.0100	n/a	n/a	0.2146
I2(HL)	I0&I1&I3&S0&!S1	0.0100	n/a	n/a	0.0892
I2(HL)	I0&I1&I3&S0&S1	0.0100	n/a	n/a	0.0891
S1(LH)	!I0&!I1&!I2&!I3&!S0	0.0100	n/a	n/a	-0.0000
S1(LH)	!I0&!I1&!I2&!I3&S0	0.0100	n/a	n/a	-0.0000
S1(LH)	!I0&!I1&!I2&I3&!S0	0.0100	n/a	n/a	-0.0000
S1(LH)	!I0&!I1&I2&!I3&S0	0.0100	n/a	n/a	-0.0000
S1(LH)	!I0&I1&!I2&!I3&!S0	0.0100	n/a	n/a	-0.0000
S1(LH)	!I0&I1&!I2&I3&!S0	0.0100	n/a	n/a	-0.0000
S1(LH)	I0&!I1&!I2&!I3&S0	0.0100	n/a	n/a	-0.0000
S1(LH)	I0&!I1&I2&!I3&S0	0.0100	n/a	n/a	-0.0000
S1(LH)	!I0&I1&!I2&I3&S0	0.0100	n/a	n/a	-0.0001
S1(LH)	!I0&I1&I2&I3&S0	0.0100	n/a	n/a	-0.0001
S1(LH)	I0&!I1&I2&!I3&!S0	0.0100	n/a	n/a	-0.0001
S1(LH)	I0&!I1&I2&I3&!S0	0.0100	n/a	n/a	-0.0001
S1(LH)	I0&I1&!I2&I3&S0	0.0100	n/a	n/a	-0.0001
S1(LH)	I0&I1&I2&!I3&!S0	0.0100	n/a	n/a	-0.0001
S1(LH)	I0&I1&I2&I3&!S0	0.0100	n/a	n/a	-0.0001
S1(LH)	I0&I1&I2&I3&S0	0.0100	n/a	n/a	-0.0001

LEAKAGE POWER

When Condition	Power (nW)
!I0&!I1&!I2&!I3&!S0&!S1	0.5292
!I0&!I1&!I2&!I3&!S0&S1	0.5301
!I0&!I1&!I2&!I3&S0&!S1	0.5301
!I0&!I1&!I2&!I3&S0&S1	0.5310
!I0&!I1&!I2&I3&!S0&!S1	0.5319
!I0&!I1&!I2&I3&!S0&S1	0.5327
!I0&!I1&!I2&I3&S0&!S1	0.5345
!I0&!I1&I2&!I3&!S0&!S1	0.5336
!I0&!I1&I2&!I3&S0&!S1	0.5327
!I0&!I1&I2&!I3&S0&S1	0.5336
!I0&!I1&I2&I3&!S0&!S1	0.5353
!I0&!I1&I2&I3&S0&!S1	0.5362
!I0&I1&!I2&!I3&!S0&!S1	0.5319
!I0&I1&!I2&!I3&!S0&S1	0.5327
!I0&I1&!I2&!I3&S0&S1	0.5353
!I0&I1&!I2&I3&!S0&!S1	0.5345
!I0&I1&!I2&I3&!S0&S1	0.5353
!I0&I1&I2&!I3&!S0&!S1	0.5362
!I0&I1&I2&!I3&S0&S1	0.5380
!I0&I1&I2&I3&!S0&!S1	0.5380
I0&!I1&!I2&!I3&!S0&S1	0.5345
I0&!I1&!I2&!I3&S0&!S1	0.5327
I0&!I1&!I2&!I3&S0&S1	0.5336
I0&!I1&!I2&I3&!S0&S1	0.5371
I0&!I1&!I2&I3&S0&!S1	0.5371
I0&!I1&I2&!I3&S0&!S1	0.5353
I0&!I1&I2&!I3&S0&S1	0.5362
I0&!I1&I2&I3&S0&!S1	0.5388
I0&I1&!I2&!I3&!S0&S1	0.5362
I0&I1&!I2&!I3&S0&S1	0.5371
I0&I1&!I2&I3&!S0&S1	0.5388
I0&I1&I2&!I3&S0&S1	0.5397
!I0&!I1&!I2&I3&S0&S1	0.5342
!I0&!I1&I2&!I3&!S0&S1	0.5334
!I0&!I1&I2&I3&!S0&S1	0.5351
!I0&!I1&I2&I3&S0&S1	0.5359
!I0&I1&!I2&!I3&S0&!S1	0.5334
!I0&I1&!I2&I3&S0&!S1	0.5368
!I0&I1&!I2&I3&S0&S1	0.5377
!I0&I1&I2&!I3&!S0&S1	0.5360
!I0&I1&I2&!I3&S0&!S1	0.5360
!I0&I1&I2&I3&!S0&S1	0.5377
!I0&I1&I2&I3&S0&!S1	0.5386
!I0&I1&I2&I3&S0&S1	0.5394
I0&!I1&!I2&!I3&!S0&!S1	0.5325
I0&!I1&!I2&I3&!S0&!S1	0.5352
I0&!I1&!I2&I3&S0&S1	0.5368
I0&!I1&I2&!I3&!S0&!S1	0.5360
I0&!I1&I2&!I3&!S0&S1	0.5368
I0&!I1&I2&I3&!S0&!S1	0.5377
I0&!I1&I2&I3&!S0&S1	0.5386

continues on next page

Table 210 – continued from previous page

I0&!I1&I2&I3&S0&S1	0.5386
I0&I1&!I2&!I3&!S0&!S1	0.5342
I0&I1&!I2&!I3&S0&!S1	0.5351
I0&I1&!I2&I3&!S0&!S1	0.5368
I0&I1&!I2&I3&S0&!S1	0.5386
I0&I1&!I2&I3&S0&S1	0.5394
I0&I1&I2&!I3&!S0&!S1	0.5377
I0&I1&I2&!I3&!S0&S1	0.5386
I0&I1&I2&!I3&S0&!S1	0.5377
I0&I1&I2&I3&!S0&!S1	0.5394
I0&I1&I2&I3&!S0&S1	0.5403
I0&I1&I2&I3&S0&!S1	0.5403
I0&I1&I2&I3&S0&S1	0.5411

gf180mcu_fd_sc_mcu9t5v0__mux4_2

gf180mcu_fd_sc_mcu9t5v0__mux4_2 symbol

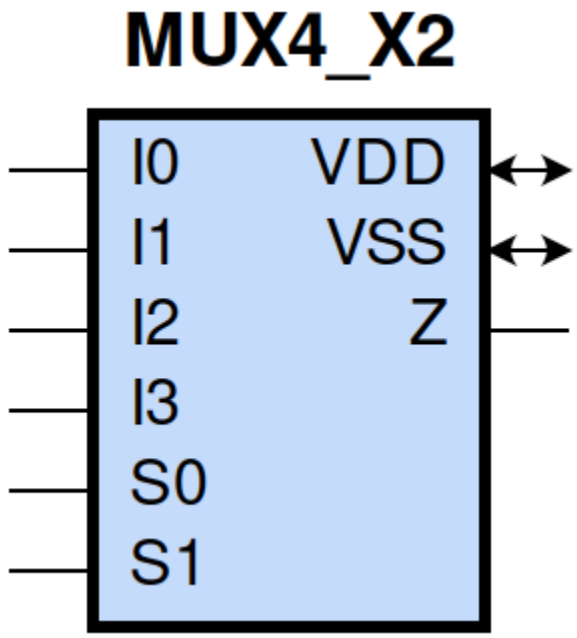

gf180mcu_fd_sc_mcu9t5v0__mux4_2 schematic

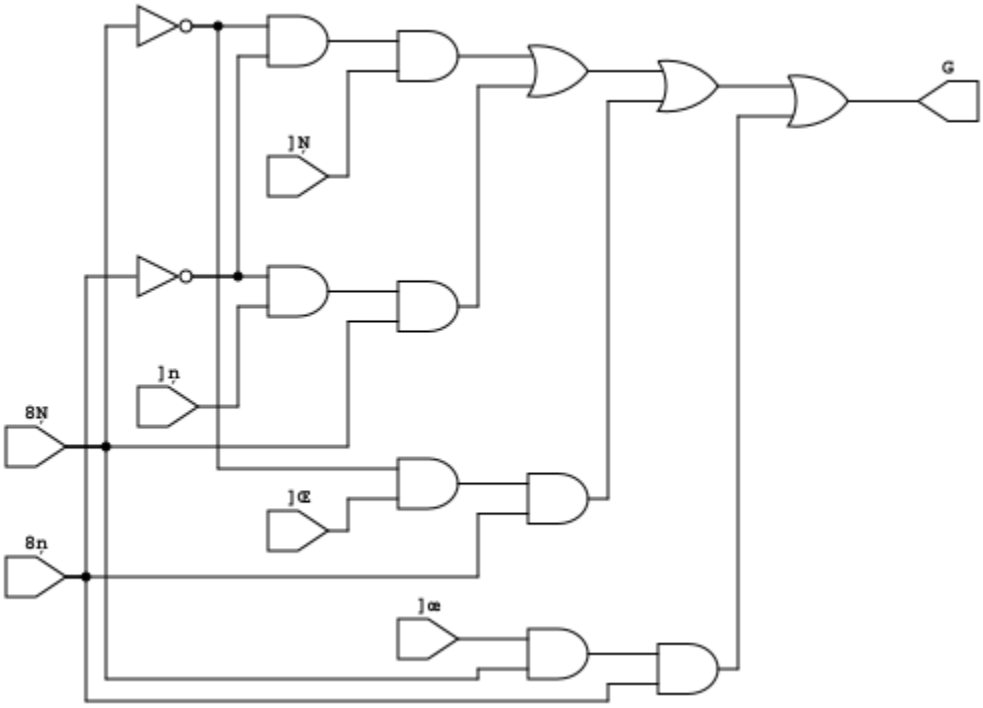

gf180mcu_fd_sc_mcu9t5v0__mux4_2 layout

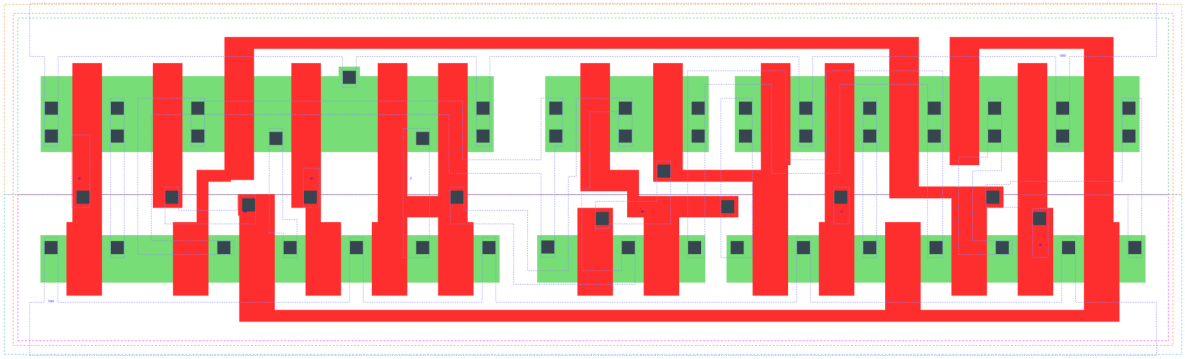

MUX4_X2 is a 4-to-1 multiplexer with 2X drive strength

Attributes

Attribute	Value
area	95.961600 μm^2

OUTPUT FUNCTIONS

Output Pin	Function
Z	((I0&(!S0)&(!S1))|(I1&S0&(!S1))|(I2&(!S0)&S1)|(I3&S0&S1))

TRUTH TABLE FOR Z

I0	I1	I2	I3	S0	S1	Z
1	?	?	?	0	0	1
?	1	?	?	1	0	1
?	?	1	?	0	1	1
?	?	?	1	1	1	1
0	?	?	?	0	0	0
?	0	?	?	1	0	0
?	?	0	?	0	1	0
?	?	?	0	1	1	0

FUNCTIONAL SCHEMATIC

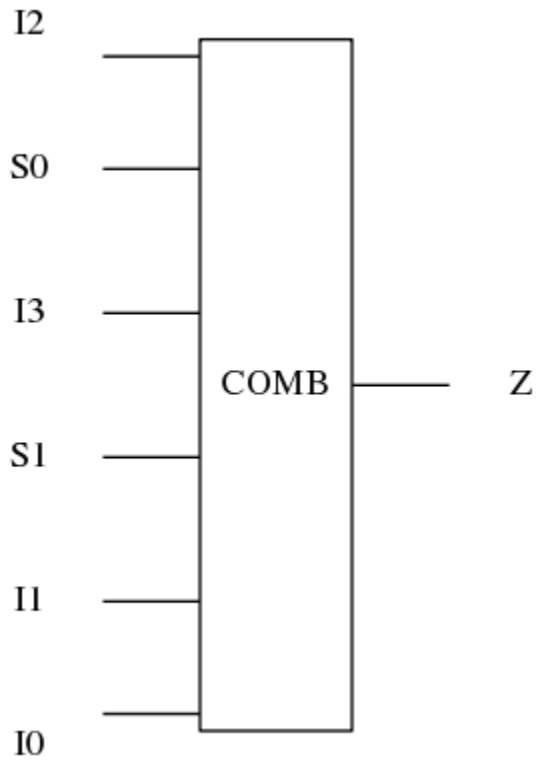

PIN CAPACITANCE (pf)

Pin	Type	Capacitance (pf)
I2	input	0.0048
S0	input	0.0169
I3	input	0.0047
S1	input	0.0098
I1	input	0.0048
I0	input	0.0048

DELAY AND OUTPUT TRANSITION TIME corresponding to min slew and load

Input Pin	Output	When Condition	Tin (ns)	Out Load (pf)	Delay (ns)	Tout (ns)
I2(HL)	Z(HL)	!I0&!I1&!I3&!S0&S1	0.0100	0.0010	0.3799	0.0643
I2(HL)	Z(HL)	!I0&!I1&I3&!S0&S1	0.0100	0.0010	0.3799	0.0645
I2(HL)	Z(HL)	!I0&I1&!I3&!S0&S1	0.0100	0.0010	0.3799	0.0644
I2(HL)	Z(HL)	!I0&I1&I3&!S0&S1	0.0100	0.0010	0.3799	0.0644
I2(HL)	Z(HL)	I0&!I1&!I3&!S0&S1	0.0100	0.0010	0.3799	0.0643

continues on next page

Table 211 – continued from previous page

I2(HL)	Z(HL)	I0&!I1&I3&!S0&S1	0.0100	0.0010	0.3800	0.0644
I2(HL)	Z(HL)	I0&I1&!I3&!S0&S1	0.0100	0.0010	0.3800	0.0646
I2(HL)	Z(HL)	I0&I1&I3&!S0&S1	0.0100	0.0010	0.3799	0.0643
I2(LH)	Z(LH)	!I0&!I1&!I3&!S0&S1	0.0100	0.0010	0.3914	0.0490
I2(LH)	Z(LH)	!I0&!I1&I3&!S0&S1	0.0100	0.0010	0.3914	0.0490
I2(LH)	Z(LH)	!I0&I1&!I3&!S0&S1	0.0100	0.0010	0.3914	0.0490
I2(LH)	Z(LH)	!I0&I1&I3&!S0&S1	0.0100	0.0010	0.3914	0.0490
I2(LH)	Z(LH)	I0&!I1&!I3&!S0&S1	0.0100	0.0010	0.3913	0.0490
I2(LH)	Z(LH)	I0&!I1&I3&!S0&S1	0.0100	0.0010	0.3913	0.0490
I2(LH)	Z(LH)	I0&I1&!I3&!S0&S1	0.0100	0.0010	0.3913	0.0490
I2(LH)	Z(LH)	I0&I1&I3&!S0&S1	0.0100	0.0010	0.3913	0.0490
S0(HL)	Z(LH)	!I0&!I1&I2&!I3&S1	0.0100	0.0010	0.4447	0.0495
S0(HL)	Z(LH)	!I0&I1&I2&!I3&S1	0.0100	0.0010	0.4331	0.0493
S0(HL)	Z(LH)	I0&!I1&!I2&!I3&!S1	0.0100	0.0010	0.4413	0.0487
S0(HL)	Z(LH)	I0&!I1&!I2&I3&!S1	0.0100	0.0010	0.4298	0.0482
S0(HL)	Z(LH)	I0&!I1&I2&!I3&!S1	0.0100	0.0010	0.4491	0.0487
S0(HL)	Z(LH)	I0&!I1&I2&!I3&S1	0.0100	0.0010	0.4521	0.0497
S0(HL)	Z(LH)	I0&!I1&I2&I3&!S1	0.0100	0.0010	0.4377	0.0487
S0(HL)	Z(LH)	I0&I1&I2&!I3&S1	0.0100	0.0010	0.4409	0.0496
S0(HL)	Z(HL)	!I0&!I1&!I2&I3&S1	0.0100	0.0010	0.3750	0.0629
S0(HL)	Z(HL)	!I0&I1&!I2&!I3&!S1	0.0100	0.0010	0.3726	0.0622
S0(HL)	Z(HL)	!I0&I1&!I2&I3&!S1	0.0100	0.0010	0.3648	0.0617
S0(HL)	Z(HL)	!I0&I1&!I2&I3&S1	0.0100	0.0010	0.3673	0.0629
S0(HL)	Z(HL)	!I0&I1&I2&!I3&!S1	0.0100	0.0010	0.3782	0.0627
S0(HL)	Z(HL)	!I0&I1&I2&I3&!S1	0.0100	0.0010	0.3706	0.0623
S0(HL)	Z(HL)	I0&!I1&!I2&I3&S1	0.0100	0.0010	0.3801	0.0636
S0(HL)	Z(HL)	I0&I1&!I2&I3&S1	0.0100	0.0010	0.3728	0.0632
S0(LH)	Z(LH)	!I0&!I1&!I2&I3&S1	0.0100	0.0010	0.3516	0.0483
S0(LH)	Z(LH)	!I0&I1&!I2&!I3&!S1	0.0100	0.0010	0.3519	0.0477
S0(LH)	Z(LH)	!I0&I1&!I2&I3&!S1	0.0100	0.0010	0.3508	0.0479
S0(LH)	Z(LH)	!I0&I1&!I2&I3&S1	0.0100	0.0010	0.3504	0.0483
S0(LH)	Z(LH)	!I0&I1&I2&!I3&!S1	0.0100	0.0010	0.3521	0.0479
S0(LH)	Z(LH)	!I0&I1&I2&I3&!S1	0.0100	0.0010	0.3519	0.0477
S0(LH)	Z(LH)	I0&!I1&!I2&I3&S1	0.0100	0.0010	0.3522	0.0483
S0(LH)	Z(LH)	I0&I1&!I2&I3&S1	0.0100	0.0010	0.3514	0.0485
S0(LH)	Z(HL)	!I0&!I1&I2&!I3&S1	0.0100	0.0010	0.3642	0.0641
S0(LH)	Z(HL)	!I0&I1&I2&!I3&S1	0.0100	0.0010	0.3595	0.0639
S0(LH)	Z(HL)	I0&!I1&!I2&!I3&!S1	0.0100	0.0010	0.3590	0.0633
S0(LH)	Z(HL)	I0&!I1&!I2&I3&!S1	0.0100	0.0010	0.3543	0.0631
S0(LH)	Z(HL)	I0&!I1&I2&!I3&!S1	0.0100	0.0010	0.3606	0.0634
S0(LH)	Z(HL)	I0&!I1&I2&!I3&S1	0.0100	0.0010	0.3660	0.0643
S0(LH)	Z(HL)	I0&!I1&I2&I3&!S1	0.0100	0.0010	0.3587	0.0632
S0(LH)	Z(HL)	I0&I1&I2&!I3&S1	0.0100	0.0010	0.3638	0.0640
I3(LH)	Z(LH)	!I0&!I1&!I2&S0&S1	0.0100	0.0010	0.3792	0.0487
I3(LH)	Z(LH)	!I0&!I1&I2&S0&S1	0.0100	0.0010	0.3792	0.0487
I3(LH)	Z(LH)	!I0&I1&!I2&S0&S1	0.0100	0.0010	0.3792	0.0487
I3(LH)	Z(LH)	!I0&I1&I2&S0&S1	0.0100	0.0010	0.3792	0.0487
I3(LH)	Z(LH)	I0&!I1&!I2&S0&S1	0.0100	0.0010	0.3792	0.0487
I3(LH)	Z(LH)	I0&!I1&I2&S0&S1	0.0100	0.0010	0.3792	0.0487
I3(LH)	Z(LH)	I0&I1&!I2&S0&S1	0.0100	0.0010	0.3792	0.0487
I3(LH)	Z(LH)	I0&I1&I2&S0&S1	0.0100	0.0010	0.3792	0.0487
I3(HL)	Z(HL)	!I0&!I1&!I2&S0&S1	0.0100	0.0010	0.3719	0.0639

continues on next page

Table 211 – continued from previous page

I3(HL)	Z(HL)	!I0&!I1&I2&S0&S1	0.0100	0.0010	0.3718	0.0639
I3(HL)	Z(HL)	!I0&I1&!I2&S0&S1	0.0100	0.0010	0.3718	0.0639
I3(HL)	Z(HL)	!I0&I1&I2&S0&S1	0.0100	0.0010	0.3718	0.0639
I3(HL)	Z(HL)	I0&!I1&!I2&S0&S1	0.0100	0.0010	0.3719	0.0639
I3(HL)	Z(HL)	I0&!I1&I2&S0&S1	0.0100	0.0010	0.3718	0.0639
I3(HL)	Z(HL)	I0&I1&!I2&S0&S1	0.0100	0.0010	0.3718	0.0639
I3(HL)	Z(HL)	I0&I1&I2&S0&S1	0.0100	0.0010	0.3718	0.0639
S1(LH)	Z(HL)	!I0&I1&!I2&!I3&S0	0.0100	0.0010	0.2141	0.0525
S1(LH)	Z(HL)	!I0&I1&I2&!I3&S0	0.0100	0.0010	0.2141	0.0527
S1(LH)	Z(HL)	I0&!I1&!I2&!I3&!S0	0.0100	0.0010	0.2139	0.0525
S1(LH)	Z(HL)	I0&!I1&!I2&I3&!S0	0.0100	0.0010	0.2139	0.0526
S1(LH)	Z(HL)	I0&I1&!I2&!I3&!S0	0.0100	0.0010	0.2139	0.0527
S1(LH)	Z(HL)	I0&I1&!I2&!I3&S0	0.0100	0.0010	0.2142	0.0526
S1(LH)	Z(HL)	I0&I1&!I2&I3&!S0	0.0100	0.0010	0.2139	0.0526
S1(LH)	Z(HL)	I0&I1&I2&!I3&S0	0.0100	0.0010	0.2142	0.0527
S1(LH)	Z(LH)	!I0&!I1&!I2&I3&S0	0.0100	0.0010	0.2140	0.0462
S1(LH)	Z(LH)	!I0&!I1&I2&!I3&!S0	0.0100	0.0010	0.2131	0.0462
S1(LH)	Z(LH)	!I0&!I1&I2&I3&!S0	0.0100	0.0010	0.2131	0.0462
S1(LH)	Z(LH)	!I0&!I1&I2&I3&S0	0.0100	0.0010	0.2140	0.0462
S1(LH)	Z(LH)	!I0&I1&I2&!I3&!S0	0.0100	0.0010	0.2131	0.0462
S1(LH)	Z(LH)	!I0&I1&I2&I3&!S0	0.0100	0.0010	0.2131	0.0462
S1(LH)	Z(LH)	I0&!I1&!I2&I3&S0	0.0100	0.0010	0.2140	0.0462
S1(LH)	Z(LH)	I0&!I1&I2&I3&S0	0.0100	0.0010	0.2140	0.0462
S1(HL)	Z(HL)	!I0&!I1&!I2&I3&S0	0.0100	0.0010	0.2161	0.0472
S1(HL)	Z(HL)	!I0&!I1&I2&!I3&!S0	0.0100	0.0010	0.2161	0.0472
S1(HL)	Z(HL)	!I0&!I1&I2&I3&!S0	0.0100	0.0010	0.2161	0.0472
S1(HL)	Z(HL)	!I0&!I1&I2&I3&S0	0.0100	0.0010	0.2161	0.0472
S1(HL)	Z(HL)	!I0&I1&I2&!I3&!S0	0.0100	0.0010	0.2161	0.0472
S1(HL)	Z(HL)	!I0&I1&I2&I3&!S0	0.0100	0.0010	0.2161	0.0472
S1(HL)	Z(HL)	I0&!I1&!I2&I3&S0	0.0100	0.0010	0.2161	0.0472
S1(HL)	Z(HL)	I0&!I1&I2&I3&S0	0.0100	0.0010	0.2161	0.0471
S1(HL)	Z(LH)	!I0&I1&!I2&!I3&S0	0.0100	0.0010	0.2810	0.0462
S1(HL)	Z(LH)	!I0&I1&I2&!I3&S0	0.0100	0.0010	0.2810	0.0462
S1(HL)	Z(LH)	I0&!I1&!I2&!I3&!S0	0.0100	0.0010	0.2807	0.0461
S1(HL)	Z(LH)	I0&!I1&!I2&I3&!S0	0.0100	0.0010	0.2807	0.0461
S1(HL)	Z(LH)	I0&I1&!I2&!I3&!S0	0.0100	0.0010	0.2807	0.0461
S1(HL)	Z(LH)	I0&I1&!I2&!I3&S0	0.0100	0.0010	0.2810	0.0462
S1(HL)	Z(LH)	I0&I1&!I2&I3&!S0	0.0100	0.0010	0.2807	0.0461
S1(HL)	Z(LH)	I0&I1&I2&!I3&S0	0.0100	0.0010	0.2810	0.0462
I1(LH)	Z(LH)	!I0&!I2&!I3&S0&!S1	0.0100	0.0010	0.3773	0.0478
I1(LH)	Z(LH)	!I0&!I2&I3&S0&!S1	0.0100	0.0010	0.3773	0.0478
I1(LH)	Z(LH)	!I0&I2&!I3&S0&!S1	0.0100	0.0010	0.3773	0.0479
I1(LH)	Z(LH)	!I0&I2&I3&S0&!S1	0.0100	0.0010	0.3773	0.0479
I1(LH)	Z(LH)	I0&!I2&!I3&S0&!S1	0.0100	0.0010	0.3773	0.0478
I1(LH)	Z(LH)	I0&!I2&I3&S0&!S1	0.0100	0.0010	0.3773	0.0478
I1(LH)	Z(LH)	I0&I2&!I3&S0&!S1	0.0100	0.0010	0.3773	0.0479
I1(LH)	Z(LH)	I0&I2&I3&S0&!S1	0.0100	0.0010	0.3773	0.0479
I1(HL)	Z(HL)	!I0&!I2&!I3&S0&!S1	0.0100	0.0010	0.3668	0.0633
I1(HL)	Z(HL)	!I0&!I2&I3&S0&!S1	0.0100	0.0010	0.3667	0.0633
I1(HL)	Z(HL)	!I0&I2&!I3&S0&!S1	0.0100	0.0010	0.3668	0.0633
I1(HL)	Z(HL)	!I0&I2&I3&S0&!S1	0.0100	0.0010	0.3667	0.0633
I1(HL)	Z(HL)	I0&!I2&!I3&S0&!S1	0.0100	0.0010	0.3667	0.0633

continues on next page

Table 211 – continued from previous page

I1(HL)	Z(HL)	I0&!I2&I3&S0&!S1	0.0100	0.0010	0.3667	0.0632
I1(HL)	Z(HL)	I0&I2&!I3&S0&!S1	0.0100	0.0010	0.3667	0.0633
I1(HL)	Z(HL)	I0&I2&I3&S0&!S1	0.0100	0.0010	0.3667	0.0632
I0(LH)	Z(LH)	!I1&!I2&!I3&!S0&!S1	0.0100	0.0010	0.3820	0.0482
I0(LH)	Z(LH)	!I1&!I2&I3&!S0&!S1	0.0100	0.0010	0.3820	0.0482
I0(LH)	Z(LH)	!I1&I2&!I3&!S0&!S1	0.0100	0.0010	0.3820	0.0482
I0(LH)	Z(LH)	!I1&I2&I3&!S0&!S1	0.0100	0.0010	0.3820	0.0482
I0(LH)	Z(LH)	I1&!I2&!I3&!S0&!S1	0.0100	0.0010	0.3820	0.0481
I0(LH)	Z(LH)	I1&!I2&I3&!S0&!S1	0.0100	0.0010	0.3820	0.0481
I0(LH)	Z(LH)	I1&I2&!I3&!S0&!S1	0.0100	0.0010	0.3820	0.0481
I0(LH)	Z(LH)	I1&I2&I3&!S0&!S1	0.0100	0.0010	0.3820	0.0481
I0(HL)	Z(HL)	!I1&!I2&!I3&!S0&!S1	0.0100	0.0010	0.3671	0.0631
I0(HL)	Z(HL)	!I1&!I2&I3&!S0&!S1	0.0100	0.0010	0.3671	0.0631
I0(HL)	Z(HL)	!I1&I2&!I3&!S0&!S1	0.0100	0.0010	0.3671	0.0631
I0(HL)	Z(HL)	!I1&I2&I3&!S0&!S1	0.0100	0.0010	0.3671	0.0631
I0(HL)	Z(HL)	I1&!I2&!I3&!S0&!S1	0.0100	0.0010	0.3671	0.0631
I0(HL)	Z(HL)	I1&!I2&I3&!S0&!S1	0.0100	0.0010	0.3671	0.0631
I0(HL)	Z(HL)	I1&I2&!I3&!S0&!S1	0.0100	0.0010	0.3671	0.0631
I0(HL)	Z(HL)	I1&I2&I3&!S0&!S1	0.0100	0.0010	0.3671	0.0631

DYNAMIC ENERGY

Input Pin	When Condition	Tin (ns)	Output	Out Load (pf)	Energy (uW/MHz)
S1	!I0&I1&!I2&!I3&S0	0.0100	Z(HL)	0.0010	0.4941
S1	!I0&I1&I2&!I3&S0	0.0100	Z(HL)	0.0010	0.4943
S1	I0&!I1&!I2&!I3&!S0	0.0100	Z(HL)	0.0010	0.4942
S1	I0&!I1&!I2&I3&!S0	0.0100	Z(HL)	0.0010	0.4942
S1	I0&I1&!I2&!I3&!S0	0.0100	Z(HL)	0.0010	0.4943
S1	I0&I1&!I2&!I3&S0	0.0100	Z(HL)	0.0010	0.4942
S1	I0&I1&!I2&I3&!S0	0.0100	Z(HL)	0.0010	0.4942
S1	I0&I1&I2&!I3&S0	0.0100	Z(HL)	0.0010	0.4942
S1	!I0&!I1&!I2&I3&S0	0.0100	Z(HL)	0.0010	0.5934
S1	!I0&!I1&I2&!I3&!S0	0.0100	Z(HL)	0.0010	0.5934
S1	!I0&!I1&I2&I3&!S0	0.0100	Z(HL)	0.0010	0.5934
S1	!I0&!I1&I2&I3&S0	0.0100	Z(HL)	0.0010	0.5934
S1	!I0&I1&I2&!I3&!S0	0.0100	Z(HL)	0.0010	0.5934
S1	!I0&I1&I2&I3&!S0	0.0100	Z(HL)	0.0010	0.5934
S1	I0&!I1&!I2&I3&S0	0.0100	Z(HL)	0.0010	0.5934
S1	I0&!I1&I2&I3&S0	0.0100	Z(HL)	0.0010	0.5935
S1	!I0&!I1&!I2&I3&S0	0.0100	Z(LH)	0.0010	0.2707
S1	!I0&!I1&I2&!I3&!S0	0.0100	Z(LH)	0.0010	0.2707
S1	!I0&!I1&I2&I3&!S0	0.0100	Z(LH)	0.0010	0.2707
S1	!I0&!I1&I2&I3&S0	0.0100	Z(LH)	0.0010	0.2707
S1	!I0&I1&I2&!I3&!S0	0.0100	Z(LH)	0.0010	0.2707
S1	!I0&I1&I2&I3&!S0	0.0100	Z(LH)	0.0010	0.2707
S1	I0&!I1&!I2&I3&S0	0.0100	Z(LH)	0.0010	0.2707
S1	I0&!I1&I2&I3&S0	0.0100	Z(LH)	0.0010	0.2707

continues on next page

Table 212 – continued from previous page

S1	!I0&I1&!I2&!I3&S0	0.0100	Z(LH)	0.0010	0.5297
S1	!I0&I1&I2&!I3&S0	0.0100	Z(LH)	0.0010	0.5297
S1	I0&!I1&!I2&!I3&!S0	0.0100	Z(LH)	0.0010	0.5296
S1	I0&!I1&!I2&I3&!S0	0.0100	Z(LH)	0.0010	0.5296
S1	I0&I1&!I2&!I3&!S0	0.0100	Z(LH)	0.0010	0.5296
S1	I0&I1&!I2&!I3&S0	0.0100	Z(LH)	0.0010	0.5297
S1	I0&I1&!I2&I3&!S0	0.0100	Z(LH)	0.0010	0.5296
S1	I0&I1&I2&!I3&S0	0.0100	Z(LH)	0.0010	0.5297
I0	!I1&!I2&!I3&!S0&!S1	0.0100	Z(LH)	0.0010	0.4381
I0	!I1&!I2&I3&!S0&!S1	0.0100	Z(LH)	0.0010	0.4381
I0	!I1&I2&!I3&!S0&!S1	0.0100	Z(LH)	0.0010	0.4381
I0	!I1&I2&I3&!S0&!S1	0.0100	Z(LH)	0.0010	0.4381
I0	I1&!I2&!I3&!S0&!S1	0.0100	Z(LH)	0.0010	0.4381
I0	I1&!I2&I3&!S0&!S1	0.0100	Z(LH)	0.0010	0.4381
I0	I1&I2&!I3&!S0&!S1	0.0100	Z(LH)	0.0010	0.4381
I0	I1&I2&I3&!S0&!S1	0.0100	Z(LH)	0.0010	0.4381
I3	!I0&!I1&!I2&S0&S1	0.0100	Z(LH)	0.0010	0.3851
I3	!I0&!I1&I2&S0&S1	0.0100	Z(LH)	0.0010	0.3851
I3	!I0&I1&!I2&S0&S1	0.0100	Z(LH)	0.0010	0.3851
I3	!I0&I1&I2&S0&S1	0.0100	Z(LH)	0.0010	0.3851
I3	I0&!I1&!I2&S0&S1	0.0100	Z(LH)	0.0010	0.3851
I3	I0&!I1&I2&S0&S1	0.0100	Z(LH)	0.0010	0.3851
I3	I0&I1&!I2&S0&S1	0.0100	Z(LH)	0.0010	0.3851
I3	I0&I1&I2&S0&S1	0.0100	Z(LH)	0.0010	0.3851
I2	!I0&!I1&!I3&!S0&S1	0.0100	Z(HL)	0.0010	0.8167
I2	!I0&!I1&I3&!S0&S1	0.0100	Z(HL)	0.0010	0.8168
I2	!I0&I1&!I3&!S0&S1	0.0100	Z(HL)	0.0010	0.8167
I2	!I0&I1&I3&!S0&S1	0.0100	Z(HL)	0.0010	0.8167
I2	I0&!I1&!I3&!S0&S1	0.0100	Z(HL)	0.0010	0.8167
I2	I0&!I1&I3&!S0&S1	0.0100	Z(HL)	0.0010	0.8166
I2	I0&I1&!I3&!S0&S1	0.0100	Z(HL)	0.0010	0.8166
I2	I0&I1&I3&!S0&S1	0.0100	Z(HL)	0.0010	0.8167
I1	!I0&!I2&!I3&S0&!S1	0.0100	Z(LH)	0.0010	0.4041
I1	!I0&!I2&I3&S0&!S1	0.0100	Z(LH)	0.0010	0.4041
I1	!I0&I2&!I3&S0&!S1	0.0100	Z(LH)	0.0010	0.4041
I1	!I0&I2&I3&S0&!S1	0.0100	Z(LH)	0.0010	0.4041
I1	I0&!I2&!I3&S0&!S1	0.0100	Z(LH)	0.0010	0.4041
I1	I0&!I2&I3&S0&!S1	0.0100	Z(LH)	0.0010	0.4041
I1	I0&I2&!I3&S0&!S1	0.0100	Z(LH)	0.0010	0.4041
I1	I0&I2&I3&S0&!S1	0.0100	Z(LH)	0.0010	0.4041
I3	!I0&!I1&!I2&S0&S1	0.0100	Z(HL)	0.0010	0.8265
I3	!I0&!I1&I2&S0&S1	0.0100	Z(HL)	0.0010	0.8265
I3	!I0&I1&!I2&S0&S1	0.0100	Z(HL)	0.0010	0.8265
I3	!I0&I1&I2&S0&S1	0.0100	Z(HL)	0.0010	0.8265
I3	I0&!I1&!I2&S0&S1	0.0100	Z(HL)	0.0010	0.8265
I3	I0&!I1&I2&S0&S1	0.0100	Z(HL)	0.0010	0.8265
I3	I0&I1&!I2&S0&S1	0.0100	Z(HL)	0.0010	0.8265
I3	I0&I1&I2&S0&S1	0.0100	Z(HL)	0.0010	0.8265
I0	!I1&!I2&!I3&!S0&!S1	0.0100	Z(HL)	0.0010	0.7643
I0	!I1&!I2&I3&!S0&!S1	0.0100	Z(HL)	0.0010	0.7643
I0	!I1&I2&!I3&!S0&!S1	0.0100	Z(HL)	0.0010	0.7643
I0	!I1&I2&I3&!S0&!S1	0.0100	Z(HL)	0.0010	0.7643

continues on next page

Table 212 – continued from previous page

I0	I1&!I2&!I3&!S0&!S1	0.0100	Z(HL)	0.0010	0.7643
I0	I1&!I2&I3&!S0&!S1	0.0100	Z(HL)	0.0010	0.7643
I0	I1&I2&!I3&!S0&!S1	0.0100	Z(HL)	0.0010	0.7643
I0	I1&I2&I3&!S0&!S1	0.0100	Z(HL)	0.0010	0.7643
S0	!I0&!I1&I2&!I3&S1	0.0100	Z(LH)	0.0010	0.7567
S0	!I0&I1&I2&!I3&S1	0.0100	Z(LH)	0.0010	0.8973
S0	I0&!I1&!I2&!I3&!S1	0.0100	Z(LH)	0.0010	0.7738
S0	I0&!I1&!I2&I3&!S1	0.0100	Z(LH)	0.0010	0.9133
S0	I0&!I1&I2&!I3&!S1	0.0100	Z(LH)	0.0010	0.9162
S0	I0&!I1&I2&!I3&S1	0.0100	Z(LH)	0.0010	0.8828
S0	I0&!I1&I2&I3&!S1	0.0100	Z(LH)	0.0010	0.7662
S0	I0&I1&I2&!I3&S1	0.0100	Z(LH)	0.0010	0.7487
S0	!I0&!I1&!I2&I3&S1	0.0100	Z(LH)	0.0010	0.3610
S0	!I0&I1&!I2&!I3&!S1	0.0100	Z(LH)	0.0010	0.3813
S0	!I0&I1&!I2&I3&!S1	0.0100	Z(LH)	0.0010	0.4346
S0	!I0&I1&!I2&I3&S1	0.0100	Z(LH)	0.0010	0.4007
S0	!I0&I1&I2&!I3&!S1	0.0100	Z(LH)	0.0010	0.6303
S0	!I0&I1&I2&I3&!S1	0.0100	Z(LH)	0.0010	0.3815
S0	I0&!I1&!I2&I3&S1	0.0100	Z(LH)	0.0010	0.6073
S0	I0&I1&!I2&I3&S1	0.0100	Z(LH)	0.0010	0.3613
I2	!I0&!I1&!I3&!S0&S1	0.0100	Z(LH)	0.0010	0.4247
I2	!I0&!I1&I3&!S0&S1	0.0100	Z(LH)	0.0010	0.4246
I2	!I0&I1&!I3&!S0&S1	0.0100	Z(LH)	0.0010	0.4246
I2	!I0&I1&I3&!S0&S1	0.0100	Z(LH)	0.0010	0.4246
I2	I0&!I1&!I3&!S0&S1	0.0100	Z(LH)	0.0010	0.4247
I2	I0&!I1&I3&!S0&S1	0.0100	Z(LH)	0.0010	0.4247
I2	I0&I1&!I3&!S0&S1	0.0100	Z(LH)	0.0010	0.4247
I2	I0&I1&I3&!S0&S1	0.0100	Z(LH)	0.0010	0.4247
S0	!I0&!I1&!I2&I3&S1	0.0100	Z(HL)	0.0010	0.9817
S0	!I0&I1&!I2&!I3&!S1	0.0100	Z(HL)	0.0010	0.9421
S0	!I0&I1&!I2&I3&!S1	0.0100	Z(HL)	0.0010	1.0862
S0	!I0&I1&!I2&I3&S1	0.0100	Z(HL)	0.0010	1.1272
S0	!I0&I1&I2&!I3&!S1	0.0100	Z(HL)	0.0010	1.0750
S0	!I0&I1&I2&I3&!S1	0.0100	Z(HL)	0.0010	0.9365
S0	I0&!I1&!I2&I3&S1	0.0100	Z(HL)	0.0010	1.0986
S0	I0&I1&!I2&I3&S1	0.0100	Z(HL)	0.0010	0.9760
S0	!I0&!I1&I2&!I3&S1	0.0100	Z(HL)	0.0010	0.7718
S0	!I0&I1&I2&!I3&S1	0.0100	Z(HL)	0.0010	0.8049
S0	I0&!I1&!I2&!I3&!S1	0.0100	Z(HL)	0.0010	0.7287
S0	I0&!I1&!I2&I3&!S1	0.0100	Z(HL)	0.0010	0.7754
S0	I0&!I1&I2&!I3&!S1	0.0100	Z(HL)	0.0010	0.9860
S0	I0&!I1&I2&!I3&S1	0.0100	Z(HL)	0.0010	1.0267
S0	I0&!I1&I2&I3&!S1	0.0100	Z(HL)	0.0010	0.7284
S0	I0&I1&I2&!I3&S1	0.0100	Z(HL)	0.0010	0.7714
I1	!I0&!I2&!I3&S0&!S1	0.0100	Z(HL)	0.0010	0.7913
I1	!I0&!I2&I3&S0&!S1	0.0100	Z(HL)	0.0010	0.7914
I1	!I0&I2&!I3&S0&!S1	0.0100	Z(HL)	0.0010	0.7913
I1	!I0&I2&I3&S0&!S1	0.0100	Z(HL)	0.0010	0.7914
I1	I0&!I2&!I3&S0&!S1	0.0100	Z(HL)	0.0010	0.7914
I1	I0&!I2&I3&S0&!S1	0.0100	Z(HL)	0.0010	0.7915
I1	I0&I2&!I3&S0&!S1	0.0100	Z(HL)	0.0010	0.7914
I1	I0&I2&I3&S0&!S1	0.0100	Z(HL)	0.0010	0.7915

continues on next page

Table 212 – continued from previous page

I3(HL)	!I0&!I1&!I2&!S0&!S1	0.0100	n/a	n/a	0.1004
I3(HL)	!I0&!I1&!I2&!S0&S1	0.0100	n/a	n/a	0.1004
I3(HL)	!I0&!I1&!I2&S0&!S1	0.0100	n/a	n/a	0.2965
I3(HL)	!I0&!I1&I2&!S0&!S1	0.0100	n/a	n/a	0.1004
I3(HL)	!I0&!I1&I2&S0&!S1	0.0100	n/a	n/a	0.2965
I3(HL)	!I0&I1&!I2&!S0&!S1	0.0100	n/a	n/a	0.1004
I3(HL)	!I0&I1&!I2&!S0&S1	0.0100	n/a	n/a	0.1004
I3(HL)	!I0&I1&I2&!S0&!S1	0.0100	n/a	n/a	0.1004
I3(HL)	I0&!I1&!I2&!S0&S1	0.0100	n/a	n/a	0.1004
I3(HL)	I0&!I1&!I2&S0&!S1	0.0100	n/a	n/a	0.2965
I3(HL)	I0&!I1&I2&S0&!S1	0.0100	n/a	n/a	0.2965
I3(HL)	I0&I1&!I2&!S0&S1	0.0100	n/a	n/a	0.1004
I3(HL)	!I0&!I1&I2&!S0&S1	0.0100	n/a	n/a	0.1005
I3(HL)	!I0&I1&!I2&S0&!S1	0.0100	n/a	n/a	0.2965
I3(HL)	!I0&I1&I2&!S0&S1	0.0100	n/a	n/a	0.1005
I3(HL)	!I0&I1&I2&S0&!S1	0.0100	n/a	n/a	0.2965
I3(HL)	I0&!I1&!I2&!S0&!S1	0.0100	n/a	n/a	0.1005
I3(HL)	I0&!I1&I2&!S0&!S1	0.0100	n/a	n/a	0.1005
I3(HL)	I0&!I1&I2&!S0&S1	0.0100	n/a	n/a	0.1005
I3(HL)	I0&I1&!I2&!S0&!S1	0.0100	n/a	n/a	0.1005
I3(HL)	I0&I1&!I2&S0&!S1	0.0100	n/a	n/a	0.2965
I3(HL)	I0&I1&I2&!S0&!S1	0.0100	n/a	n/a	0.1005
I3(HL)	I0&I1&I2&!S0&S1	0.0100	n/a	n/a	0.1005
I3(HL)	I0&I1&I2&S0&!S1	0.0100	n/a	n/a	0.2965
I2(LH)	!I0&!I1&!I3&!S0&!S1	0.0100	n/a	n/a	0.1116
I2(LH)	!I0&!I1&!I3&S0&!S1	0.0100	n/a	n/a	0.0110
I2(LH)	!I0&!I1&!I3&S0&S1	0.0100	n/a	n/a	0.0110
I2(LH)	!I0&!I1&I3&!S0&!S1	0.0100	n/a	n/a	0.1116
I2(LH)	!I0&!I1&I3&S0&!S1	0.0100	n/a	n/a	0.0110
I2(LH)	!I0&I1&!I3&!S0&!S1	0.0100	n/a	n/a	0.1116
I2(LH)	!I0&I1&!I3&S0&S1	0.0100	n/a	n/a	0.0110
I2(LH)	!I0&I1&I3&!S0&!S1	0.0100	n/a	n/a	0.1116
I2(LH)	I0&!I1&!I3&S0&!S1	0.0100	n/a	n/a	0.0110
I2(LH)	I0&!I1&!I3&S0&S1	0.0100	n/a	n/a	0.0110
I2(LH)	I0&!I1&I3&S0&!S1	0.0100	n/a	n/a	0.0110
I2(LH)	I0&I1&!I3&S0&S1	0.0100	n/a	n/a	0.0110
I2(LH)	!I0&!I1&I3&S0&S1	0.0100	n/a	n/a	0.0110
I2(LH)	!I0&I1&!I3&S0&!S1	0.0100	n/a	n/a	0.0110
I2(LH)	!I0&I1&I3&S0&!S1	0.0100	n/a	n/a	0.0110
I2(LH)	!I0&I1&I3&S0&S1	0.0100	n/a	n/a	0.0110
I2(LH)	I0&!I1&!I3&!S0&!S1	0.0100	n/a	n/a	0.1117
I2(LH)	I0&!I1&I3&!S0&!S1	0.0100	n/a	n/a	0.1116
I2(LH)	I0&!I1&I3&S0&S1	0.0100	n/a	n/a	0.0110
I2(LH)	I0&I1&!I3&!S0&!S1	0.0100	n/a	n/a	0.1117
I2(LH)	I0&I1&!I3&S0&!S1	0.0100	n/a	n/a	0.0110
I2(LH)	I0&I1&I3&!S0&!S1	0.0100	n/a	n/a	0.1116
I2(LH)	I0&I1&I3&S0&!S1	0.0100	n/a	n/a	0.0110
I2(LH)	I0&I1&I3&S0&S1	0.0100	n/a	n/a	0.0110
I1(LH)	!I0&!I2&!I3&!S0&!S1	0.0100	n/a	n/a	0.0087
I1(LH)	!I0&!I2&!I3&!S0&S1	0.0100	n/a	n/a	0.0087
I1(LH)	!I0&!I2&!I3&S0&S1	0.0100	n/a	n/a	0.0592
I1(LH)	!I0&!I2&I3&!S0&!S1	0.0100	n/a	n/a	0.0087

continues on next page

Table 212 – continued from previous page

I1(LH)	!I0&!I2&I3&!S0&S1	0.0100	n/a	n/a	0.0087
I1(LH)	!I0&I2&!I3&!S0&!S1	0.0100	n/a	n/a	0.0087
I1(LH)	!I0&I2&!I3&S0&S1	0.0100	n/a	n/a	0.0592
I1(LH)	!I0&I2&I3&!S0&!S1	0.0100	n/a	n/a	0.0087
I1(LH)	I0&!I2&!I3&!S0&S1	0.0100	n/a	n/a	0.0087
I1(LH)	I0&!I2&!I3&S0&S1	0.0100	n/a	n/a	0.0592
I1(LH)	I0&!I2&I3&!S0&S1	0.0100	n/a	n/a	0.0087
I1(LH)	I0&I2&!I3&S0&S1	0.0100	n/a	n/a	0.0592
I1(LH)	!I0&!I2&I3&S0&S1	0.0100	n/a	n/a	0.0592
I1(LH)	!I0&I2&!I3&!S0&S1	0.0100	n/a	n/a	0.0087
I1(LH)	!I0&I2&I3&!S0&S1	0.0100	n/a	n/a	0.0087
I1(LH)	!I0&I2&I3&S0&S1	0.0100	n/a	n/a	0.0592
I1(LH)	I0&!I2&!I3&!S0&!S1	0.0100	n/a	n/a	0.0087
I1(LH)	I0&!I2&I3&!S0&!S1	0.0100	n/a	n/a	0.0087
I1(LH)	I0&!I2&I3&S0&S1	0.0100	n/a	n/a	0.0592
I1(LH)	I0&I2&!I3&!S0&!S1	0.0100	n/a	n/a	0.0087
I1(LH)	I0&I2&!I3&!S0&S1	0.0100	n/a	n/a	0.0087
I1(LH)	I0&I2&I3&!S0&!S1	0.0100	n/a	n/a	0.0087
I1(LH)	I0&I2&I3&!S0&S1	0.0100	n/a	n/a	0.0087
I1(LH)	I0&I2&I3&S0&S1	0.0100	n/a	n/a	0.0592
S0(HL)	!I0&!I1&!I2&!I3&!S1	0.0100	n/a	n/a	0.3090
S0(HL)	!I0&!I1&!I2&!I3&S1	0.0100	n/a	n/a	0.3091
S0(HL)	!I0&!I1&!I2&I3&!S1	0.0100	n/a	n/a	0.4555
S0(HL)	!I0&!I1&I2&!I3&!S1	0.0100	n/a	n/a	0.4443
S0(HL)	!I0&!I1&I2&I3&!S1	0.0100	n/a	n/a	0.3036
S0(HL)	!I0&I1&!I2&!I3&S1	0.0100	n/a	n/a	0.4568
S0(HL)	I0&!I1&!I2&!I3&S1	0.0100	n/a	n/a	0.4280
S0(HL)	I0&I1&!I2&!I3&S1	0.0100	n/a	n/a	0.3033
S0(HL)	!I0&!I1&I2&I3&S1	0.0100	n/a	n/a	0.3034
S0(HL)	!I0&I1&I2&I3&S1	0.0100	n/a	n/a	0.4515
S0(HL)	I0&!I1&I2&I3&S1	0.0100	n/a	n/a	0.4205
S0(HL)	I0&I1&!I2&!I3&!S1	0.0100	n/a	n/a	0.3033
S0(HL)	I0&I1&!I2&I3&!S1	0.0100	n/a	n/a	0.4500
S0(HL)	I0&I1&I2&!I3&!S1	0.0100	n/a	n/a	0.4364
S0(HL)	I0&I1&I2&I3&!S1	0.0100	n/a	n/a	0.2980
S0(HL)	I0&I1&I2&I3&S1	0.0100	n/a	n/a	0.2980
I1(HL)	!I0&!I2&!I3&!S0&!S1	0.0100	n/a	n/a	0.1039
I1(HL)	!I0&!I2&!I3&!S0&S1	0.0100	n/a	n/a	0.1039
I1(HL)	!I0&!I2&!I3&S0&S1	0.0100	n/a	n/a	0.3017
I1(HL)	!I0&!I2&I3&!S0&!S1	0.0100	n/a	n/a	0.1039
I1(HL)	!I0&!I2&I3&!S0&S1	0.0100	n/a	n/a	0.1039
I1(HL)	!I0&I2&!I3&!S0&!S1	0.0100	n/a	n/a	0.1039
I1(HL)	!I0&I2&!I3&S0&S1	0.0100	n/a	n/a	0.3017
I1(HL)	!I0&I2&I3&!S0&!S1	0.0100	n/a	n/a	0.1039
I1(HL)	I0&!I2&!I3&!S0&S1	0.0100	n/a	n/a	0.1039
I1(HL)	I0&!I2&!I3&S0&S1	0.0100	n/a	n/a	0.3017
I1(HL)	I0&!I2&I3&!S0&S1	0.0100	n/a	n/a	0.1039
I1(HL)	I0&I2&!I3&S0&S1	0.0100	n/a	n/a	0.3017
I1(HL)	!I0&!I2&I3&S0&S1	0.0100	n/a	n/a	0.3016
I1(HL)	!I0&I2&!I3&!S0&S1	0.0100	n/a	n/a	0.1039
I1(HL)	!I0&I2&I3&!S0&S1	0.0100	n/a	n/a	0.1039
I1(HL)	!I0&I2&I3&S0&S1	0.0100	n/a	n/a	0.3016

continues on next page

Table 212 – continued from previous page

I1(HL)	I0&!I2&!I3&!S0&!S1	0.0100	n/a	n/a	0.1039
I1(HL)	I0&!I2&I3&!S0&!S1	0.0100	n/a	n/a	0.1039
I1(HL)	I0&!I2&I3&S0&S1	0.0100	n/a	n/a	0.3016
I1(HL)	I0&I2&!I3&!S0&!S1	0.0100	n/a	n/a	0.1039
I1(HL)	I0&I2&!I3&!S0&S1	0.0100	n/a	n/a	0.1039
I1(HL)	I0&I2&I3&!S0&!S1	0.0100	n/a	n/a	0.1039
I1(HL)	I0&I2&I3&!S0&S1	0.0100	n/a	n/a	0.1039
I1(HL)	I0&I2&I3&S0&S1	0.0100	n/a	n/a	0.3016
I3(LH)	!I0&!I1&!I2&!S0&!S1	0.0100	n/a	n/a	0.0096
I3(LH)	!I0&!I1&!I2&!S0&S1	0.0100	n/a	n/a	0.0096
I3(LH)	!I0&!I1&!I2&S0&!S1	0.0100	n/a	n/a	0.0741
I3(LH)	!I0&!I1&I2&!S0&!S1	0.0100	n/a	n/a	0.0096
I3(LH)	!I0&!I1&I2&S0&!S1	0.0100	n/a	n/a	0.0741
I3(LH)	!I0&I1&!I2&!S0&!S1	0.0100	n/a	n/a	0.0096
I3(LH)	!I0&I1&!I2&!S0&S1	0.0100	n/a	n/a	0.0096
I3(LH)	!I0&I1&I2&!S0&!S1	0.0100	n/a	n/a	0.0096
I3(LH)	I0&!I1&!I2&!S0&S1	0.0100	n/a	n/a	0.0096
I3(LH)	I0&!I1&!I2&S0&!S1	0.0100	n/a	n/a	0.0741
I3(LH)	I0&!I1&I2&S0&!S1	0.0100	n/a	n/a	0.0741
I3(LH)	I0&I1&!I2&!S0&S1	0.0100	n/a	n/a	0.0096
I3(LH)	!I0&!I1&I2&!S0&S1	0.0100	n/a	n/a	0.0096
I3(LH)	!I0&I1&!I2&S0&!S1	0.0100	n/a	n/a	0.0741
I3(LH)	!I0&I1&I2&!S0&S1	0.0100	n/a	n/a	0.0096
I3(LH)	!I0&I1&I2&S0&!S1	0.0100	n/a	n/a	0.0741
I3(LH)	I0&!I1&!I2&!S0&!S1	0.0100	n/a	n/a	0.0096
I3(LH)	I0&!I1&I2&!S0&!S1	0.0100	n/a	n/a	0.0096
I3(LH)	I0&!I1&I2&!S0&S1	0.0100	n/a	n/a	0.0096
I3(LH)	I0&I1&!I2&!S0&!S1	0.0100	n/a	n/a	0.0096
I3(LH)	I0&I1&!I2&S0&!S1	0.0100	n/a	n/a	0.0741
I3(LH)	I0&I1&I2&!S0&!S1	0.0100	n/a	n/a	0.0096
I3(LH)	I0&I1&I2&!S0&S1	0.0100	n/a	n/a	0.0096
I3(LH)	I0&I1&I2&S0&!S1	0.0100	n/a	n/a	0.0741
I0(HL)	!I1&!I2&!I3&!S0&S1	0.0100	n/a	n/a	0.2747
I0(HL)	!I1&!I2&!I3&S0&!S1	0.0100	n/a	n/a	0.1134
I0(HL)	!I1&!I2&!I3&S0&S1	0.0100	n/a	n/a	0.1134
I0(HL)	!I1&!I2&I3&!S0&S1	0.0100	n/a	n/a	0.2747
I0(HL)	!I1&!I2&I3&S0&!S1	0.0100	n/a	n/a	0.1134
I0(HL)	!I1&I2&!I3&S0&!S1	0.0100	n/a	n/a	0.1134
I0(HL)	!I1&I2&!I3&S0&S1	0.0100	n/a	n/a	0.1134
I0(HL)	!I1&I2&I3&S0&!S1	0.0100	n/a	n/a	0.1134
I0(HL)	I1&!I2&!I3&!S0&S1	0.0100	n/a	n/a	0.2747
I0(HL)	I1&!I2&!I3&S0&S1	0.0100	n/a	n/a	0.1134
I0(HL)	I1&!I2&I3&!S0&S1	0.0100	n/a	n/a	0.2747
I0(HL)	I1&I2&!I3&S0&S1	0.0100	n/a	n/a	0.1134
I0(HL)	!I1&!I2&I3&S0&S1	0.0100	n/a	n/a	0.1134
I0(HL)	!I1&I2&!I3&!S0&S1	0.0100	n/a	n/a	0.2747
I0(HL)	!I1&I2&I3&!S0&S1	0.0100	n/a	n/a	0.2747
I0(HL)	!I1&I2&I3&S0&S1	0.0100	n/a	n/a	0.1134
I0(HL)	I1&!I2&!I3&S0&!S1	0.0100	n/a	n/a	0.1134
I0(HL)	I1&!I2&I3&S0&!S1	0.0100	n/a	n/a	0.1134
I0(HL)	I1&!I2&I3&S0&S1	0.0100	n/a	n/a	0.1134
I0(HL)	I1&I2&!I3&!S0&S1	0.0100	n/a	n/a	0.2747

continues on next page

Table 212 – continued from previous page

I0(HL)	I1&I2&!I3&S0&!S1	0.0100	n/a	n/a	0.1134
I0(HL)	I1&I2&I3&!S0&S1	0.0100	n/a	n/a	0.2747
I0(HL)	I1&I2&I3&S0&!S1	0.0100	n/a	n/a	0.1134
I0(HL)	I1&I2&I3&S0&S1	0.0100	n/a	n/a	0.1134
S1(HL)	!I0&!I1&!I2&!I3&!S0	0.0100	n/a	n/a	0.1908
S1(HL)	!I0&!I1&!I2&!I3&S0	0.0100	n/a	n/a	0.1907
S1(HL)	!I0&!I1&!I2&I3&!S0	0.0100	n/a	n/a	0.1908
S1(HL)	!I0&!I1&I2&!I3&S0	0.0100	n/a	n/a	0.1907
S1(HL)	!I0&I1&!I2&!I3&!S0	0.0100	n/a	n/a	0.1907
S1(HL)	!I0&I1&!I2&I3&!S0	0.0100	n/a	n/a	0.1907
S1(HL)	I0&!I1&!I2&!I3&S0	0.0100	n/a	n/a	0.1907
S1(HL)	I0&!I1&I2&!I3&S0	0.0100	n/a	n/a	0.1907
S1(HL)	!I0&I1&!I2&I3&S0	0.0100	n/a	n/a	0.1853
S1(HL)	!I0&I1&I2&I3&S0	0.0100	n/a	n/a	0.1853
S1(HL)	I0&!I1&I2&!I3&!S0	0.0100	n/a	n/a	0.1853
S1(HL)	I0&!I1&I2&I3&!S0	0.0100	n/a	n/a	0.1853
S1(HL)	I0&I1&!I2&I3&S0	0.0100	n/a	n/a	0.1853
S1(HL)	I0&I1&I2&!I3&!S0	0.0100	n/a	n/a	0.1853
S1(HL)	I0&I1&I2&I3&!S0	0.0100	n/a	n/a	0.1853
S1(HL)	I0&I1&I2&I3&S0	0.0100	n/a	n/a	0.1853
I0(LH)	!I1&!I2&!I3&!S0&S1	0.0100	n/a	n/a	0.0922
I0(LH)	!I1&!I2&!I3&S0&!S1	0.0100	n/a	n/a	0.0053
I0(LH)	!I1&!I2&!I3&S0&S1	0.0100	n/a	n/a	0.0053
I0(LH)	!I1&!I2&I3&!S0&S1	0.0100	n/a	n/a	0.0922
I0(LH)	!I1&!I2&I3&S0&!S1	0.0100	n/a	n/a	0.0053
I0(LH)	!I1&I2&!I3&S0&!S1	0.0100	n/a	n/a	0.0053
I0(LH)	!I1&I2&!I3&S0&S1	0.0100	n/a	n/a	0.0053
I0(LH)	!I1&I2&I3&S0&!S1	0.0100	n/a	n/a	0.0053
I0(LH)	I1&!I2&!I3&!S0&S1	0.0100	n/a	n/a	0.0922
I0(LH)	I1&!I2&!I3&S0&S1	0.0100	n/a	n/a	0.0053
I0(LH)	I1&!I2&I3&!S0&S1	0.0100	n/a	n/a	0.0922
I0(LH)	I1&I2&!I3&S0&S1	0.0100	n/a	n/a	0.0053
I0(LH)	!I1&!I2&I3&S0&S1	0.0100	n/a	n/a	0.0053
I0(LH)	!I1&I2&!I3&!S0&S1	0.0100	n/a	n/a	0.0922
I0(LH)	!I1&I2&I3&!S0&S1	0.0100	n/a	n/a	0.0922
I0(LH)	!I1&I2&I3&S0&S1	0.0100	n/a	n/a	0.0053
I0(LH)	I1&!I2&!I3&S0&!S1	0.0100	n/a	n/a	0.0053
I0(LH)	I1&!I2&I3&S0&!S1	0.0100	n/a	n/a	0.0053
I0(LH)	I1&!I2&I3&S0&S1	0.0100	n/a	n/a	0.0053
I0(LH)	I1&I2&!I3&!S0&S1	0.0100	n/a	n/a	0.0922
I0(LH)	I1&I2&!I3&S0&!S1	0.0100	n/a	n/a	0.0053
I0(LH)	I1&I2&I3&!S0&S1	0.0100	n/a	n/a	0.0922
I0(LH)	I1&I2&I3&S0&!S1	0.0100	n/a	n/a	0.0053
I0(LH)	I1&I2&I3&S0&S1	0.0100	n/a	n/a	0.0053
S0(LH)	!I0&!I1&!I2&!I3&!S1	0.0100	n/a	n/a	-0.0014
S0(LH)	!I0&!I1&!I2&!I3&S1	0.0100	n/a	n/a	-0.0012
S0(LH)	!I0&!I1&!I2&I3&!S1	0.0100	n/a	n/a	0.0519
S0(LH)	!I0&!I1&I2&!I3&!S1	0.0100	n/a	n/a	0.2528
S0(LH)	!I0&!I1&I2&I3&!S1	0.0100	n/a	n/a	-0.0013
S0(LH)	!I0&I1&!I2&!I3&S1	0.0100	n/a	n/a	0.0381
S0(LH)	I0&!I1&!I2&!I3&S1	0.0100	n/a	n/a	0.2501
S0(LH)	I0&I1&!I2&!I3&S1	0.0100	n/a	n/a	-0.0013

continues on next page

Table 212 – continued from previous page

S0(LH)	!I0&!I1&I2&I3&S1	0.0100	n/a	n/a	-0.0014
S0(LH)	!I0&I1&I2&I3&S1	0.0100	n/a	n/a	0.0379
S0(LH)	I0&!I1&I2&I3&S1	0.0100	n/a	n/a	0.2503
S0(LH)	I0&I1&!I2&!I3&!S1	0.0100	n/a	n/a	-0.0013
S0(LH)	I0&I1&!I2&I3&!S1	0.0100	n/a	n/a	0.0519
S0(LH)	I0&I1&I2&!I3&!S1	0.0100	n/a	n/a	0.2528
S0(LH)	I0&I1&I2&I3&!S1	0.0100	n/a	n/a	-0.0013
S0(LH)	I0&I1&I2&I3&S1	0.0100	n/a	n/a	-0.0012
I2(HL)	!I0&!I1&!I3&!S0&!S1	0.0100	n/a	n/a	0.2841
I2(HL)	!I0&!I1&!I3&S0&!S1	0.0100	n/a	n/a	0.1249
I2(HL)	!I0&!I1&!I3&S0&S1	0.0100	n/a	n/a	0.1249
I2(HL)	!I0&!I1&I3&!S0&!S1	0.0100	n/a	n/a	0.2840
I2(HL)	!I0&!I1&I3&S0&!S1	0.0100	n/a	n/a	0.1249
I2(HL)	!I0&I1&!I3&!S0&!S1	0.0100	n/a	n/a	0.2841
I2(HL)	!I0&I1&!I3&S0&S1	0.0100	n/a	n/a	0.1249
I2(HL)	!I0&I1&I3&!S0&!S1	0.0100	n/a	n/a	0.2840
I2(HL)	I0&!I1&!I3&S0&!S1	0.0100	n/a	n/a	0.1249
I2(HL)	I0&!I1&!I3&S0&S1	0.0100	n/a	n/a	0.1249
I2(HL)	I0&!I1&I3&S0&!S1	0.0100	n/a	n/a	0.1249
I2(HL)	I0&I1&!I3&S0&S1	0.0100	n/a	n/a	0.1249
I2(HL)	!I0&!I1&I3&S0&S1	0.0100	n/a	n/a	0.1249
I2(HL)	!I0&I1&!I3&S0&!S1	0.0100	n/a	n/a	0.1249
I2(HL)	!I0&I1&I3&S0&!S1	0.0100	n/a	n/a	0.1249
I2(HL)	!I0&I1&I3&S0&S1	0.0100	n/a	n/a	0.1249
I2(HL)	I0&!I1&!I3&!S0&!S1	0.0100	n/a	n/a	0.2840
I2(HL)	I0&!I1&I3&!S0&!S1	0.0100	n/a	n/a	0.2840
I2(HL)	I0&!I1&I3&S0&S1	0.0100	n/a	n/a	0.1250
I2(HL)	I0&I1&!I3&!S0&!S1	0.0100	n/a	n/a	0.2840
I2(HL)	I0&I1&!I3&S0&!S1	0.0100	n/a	n/a	0.1249
I2(HL)	I0&I1&I3&!S0&!S1	0.0100	n/a	n/a	0.2840
I2(HL)	I0&I1&I3&S0&!S1	0.0100	n/a	n/a	0.1249
I2(HL)	I0&I1&I3&S0&S1	0.0100	n/a	n/a	0.1249
S1(LH)	!I0&!I1&!I2&!I3&!S0	0.0100	n/a	n/a	-0.0016
S1(LH)	!I0&!I1&!I2&!I3&S0	0.0100	n/a	n/a	-0.0016
S1(LH)	!I0&!I1&!I2&I3&!S0	0.0100	n/a	n/a	-0.0016
S1(LH)	!I0&!I1&I2&!I3&S0	0.0100	n/a	n/a	-0.0016
S1(LH)	!I0&I1&!I2&!I3&!S0	0.0100	n/a	n/a	-0.0016
S1(LH)	!I0&I1&!I2&I3&!S0	0.0100	n/a	n/a	-0.0016
S1(LH)	I0&!I1&!I2&!I3&S0	0.0100	n/a	n/a	-0.0016
S1(LH)	I0&!I1&I2&!I3&S0	0.0100	n/a	n/a	-0.0016
S1(LH)	!I0&I1&!I2&I3&S0	0.0100	n/a	n/a	-0.0017
S1(LH)	!I0&I1&I2&I3&S0	0.0100	n/a	n/a	-0.0017
S1(LH)	I0&!I1&I2&!I3&!S0	0.0100	n/a	n/a	-0.0017
S1(LH)	I0&!I1&I2&I3&!S0	0.0100	n/a	n/a	-0.0017
S1(LH)	I0&I1&!I2&I3&S0	0.0100	n/a	n/a	-0.0017
S1(LH)	I0&I1&I2&!I3&!S0	0.0100	n/a	n/a	-0.0017
S1(LH)	I0&I1&I2&I3&!S0	0.0100	n/a	n/a	-0.0017
S1(LH)	I0&I1&I2&I3&S0	0.0100	n/a	n/a	-0.0017

LEAKAGE POWER

When Condition	Power (nW)
!I0&!I1&!I2&!I3&!S0&!S1	0.5557
!I0&!I1&!I2&!I3&!S0&S1	0.5568
!I0&!I1&!I2&!I3&S0&!S1	0.5568
!I0&!I1&!I2&!I3&S0&S1	0.5579
!I0&!I1&!I2&I3&!S0&!S1	0.5588
!I0&!I1&!I2&I3&!S0&S1	0.5599
!I0&!I1&!I2&I3&S0&!S1	0.5618
!I0&!I1&I2&!I3&!S0&!S1	0.5607
!I0&!I1&I2&!I3&S0&!S1	0.5599
!I0&!I1&I2&!I3&S0&S1	0.5609
!I0&!I1&I2&I3&!S0&!S1	0.5629
!I0&!I1&I2&I3&S0&!S1	0.5640
!I0&I1&!I2&!I3&!S0&!S1	0.5588
!I0&I1&!I2&!I3&!S0&S1	0.5599
!I0&I1&!I2&!I3&S0&S1	0.5629
!I0&I1&!I2&I3&!S0&!S1	0.5618
!I0&I1&!I2&I3&!S0&S1	0.5629
!I0&I1&I2&!I3&!S0&!S1	0.5638
!I0&I1&I2&!I3&S0&S1	0.5660
!I0&I1&I2&I3&!S0&!S1	0.5660
I0&!I1&!I2&!I3&!S0&S1	0.5618
I0&!I1&!I2&!I3&S0&!S1	0.5599
I0&!I1&!I2&!I3&S0&S1	0.5609
I0&!I1&!I2&I3&!S0&S1	0.5649
I0&!I1&!I2&I3&S0&!S1	0.5649
I0&!I1&I2&!I3&S0&!S1	0.5629
I0&!I1&I2&!I3&S0&S1	0.5640
I0&!I1&I2&I3&S0&!S1	0.5671
I0&I1&!I2&!I3&!S0&S1	0.5640
I0&I1&!I2&!I3&S0&S1	0.5651
I0&I1&!I2&I3&!S0&S1	0.5671
I0&I1&I2&!I3&S0&S1	0.5681
!I0&!I1&!I2&I3&S0&S1	0.5607
!I0&!I1&I2&!I3&!S0&S1	0.5597
!I0&!I1&I2&I3&!S0&S1	0.5618
!I0&!I1&I2&I3&S0&S1	0.5629
!I0&I1&!I2&!I3&S0&!S1	0.5597
!I0&I1&!I2&I3&S0&!S1	0.5638
!I0&I1&!I2&I3&S0&S1	0.5649
!I0&I1&I2&!I3&!S0&S1	0.5628
!I0&I1&I2&!I3&S0&!S1	0.5628
!I0&I1&I2&I3&!S0&S1	0.5649
!I0&I1&I2&I3&S0&!S1	0.5660
!I0&I1&I2&I3&S0&S1	0.5670
I0&!I1&!I2&!I3&!S0&!S1	0.5586
I0&!I1&!I2&I3&!S0&!S1	0.5616
I0&!I1&!I2&I3&S0&S1	0.5638
I0&!I1&I2&!I3&!S0&!S1	0.5628
I0&!I1&I2&!I3&!S0&S1	0.5638
I0&!I1&I2&I3&!S0&!S1	0.5649
I0&!I1&I2&I3&!S0&S1	0.5660

continues on next page

Table 213 – continued from previous page

I0&!I1&I2&I3&S0&S1	0.5660
I0&I1&!I2&!I3&!S0&!S1	0.5607
I0&I1&!I2&!I3&S0&!S1	0.5618
I0&I1&!I2&I3&!S0&!S1	0.5638
I0&I1&!I2&I3&S0&!S1	0.5660
I0&I1&!I2&I3&S0&S1	0.5670
I0&I1&I2&!I3&!S0&!S1	0.5649
I0&I1&I2&!I3&!S0&S1	0.5660
I0&I1&I2&!I3&S0&!S1	0.5649
I0&I1&I2&I3&!S0&!S1	0.5670
I0&I1&I2&I3&!S0&S1	0.5681
I0&I1&I2&I3&S0&!S1	0.5681
I0&I1&I2&I3&S0&S1	0.5692

gf180mcu_fd_sc_mcu9t5v0__mux4_4

gf180mcu_fd_sc_mcu9t5v0__mux4_4 symbol

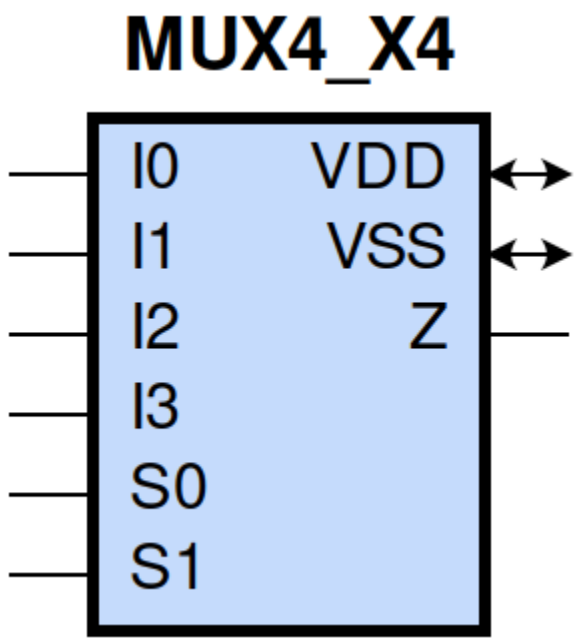

gf180mcu_fd_sc_mcu9t5v0__mux4_4 schematic

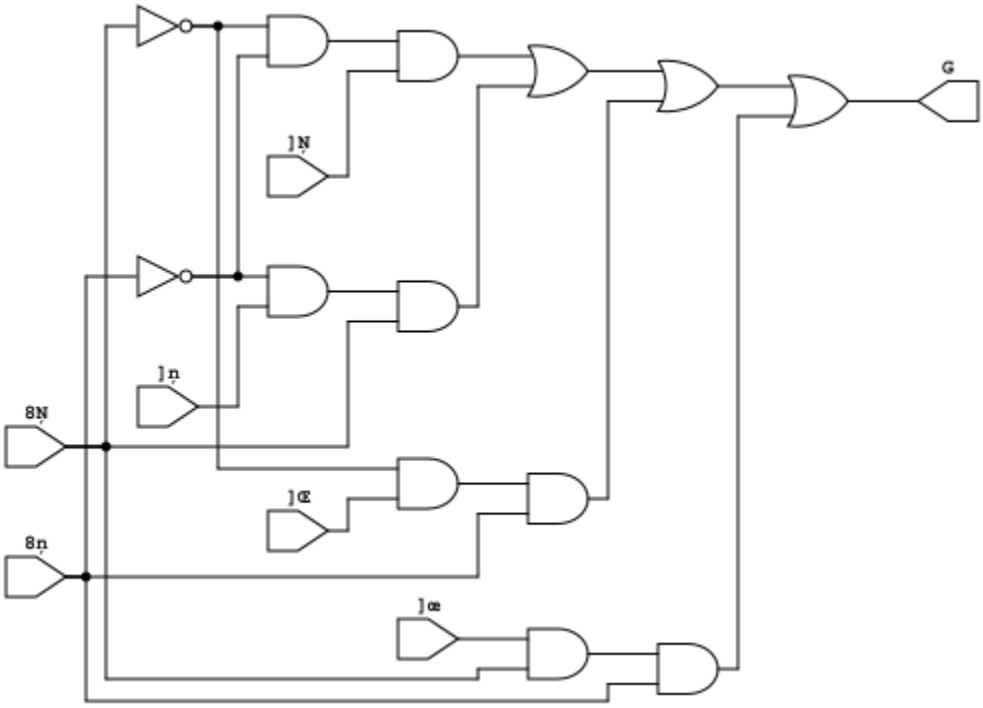

gf180mcu_fd_sc_mcu9t5v0__mux4_4 layout

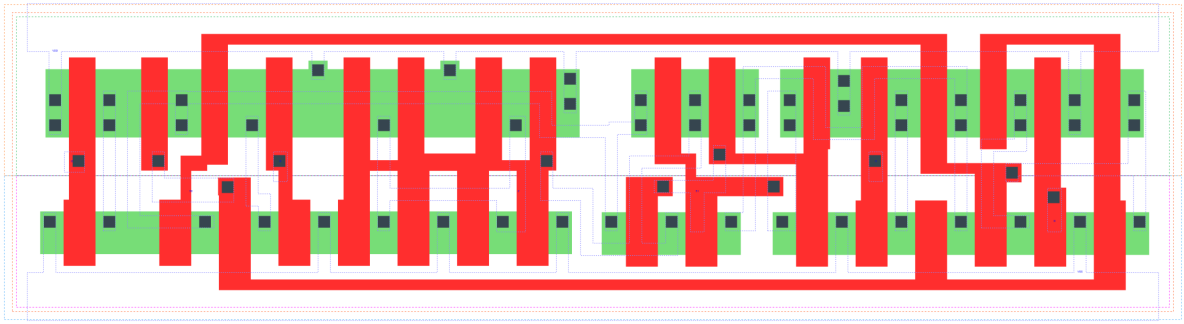

MUX4_X4 is a 4-to-1 multiplexer with 4X drive strength

Attributes

Attribute	Value
area	107.251200 μm^2

OUTPUT FUNCTIONS

Output Pin	Function
Z	((I0&(!S0)&(!S1))|(I1&S0&(!S1))|(I2&(!S0)&S1)|(I3&S0&S1))

TRUTH TABLE FOR Z

I0	I1	I2	I3	S0	S1	Z
1	?	?	?	0	0	1
?	1	?	?	1	0	1
?	?	1	?	0	1	1
?	?	?	1	1	1	1
0	?	?	?	0	0	0
?	0	?	?	1	0	0
?	?	0	?	0	1	0
?	?	?	0	1	1	0

FUNCTIONAL SCHEMATIC

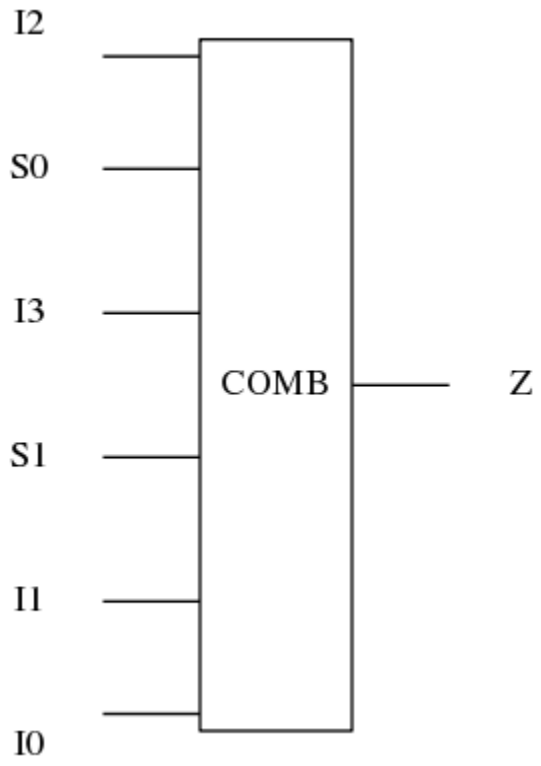

PIN CAPACITANCE (pf)

Pin	Type	Capacitance (pf)
I2	input	0.0047
S0	input	0.0171
I3	input	0.0047
S1	input	0.0103
I1	input	0.0048
I0	input	0.0048

DELAY AND OUTPUT TRANSITION TIME corresponding to min slew and load

Input Pin	Output	When Condition	Tin (ns)	Out Load (pf)	Delay (ns)	Tout (ns)
I2(HL)	Z(HL)	!I0&!I1&!I3&!S0&S1	0.0100	0.0010	0.4661	0.0783
I2(HL)	Z(HL)	!I0&!I1&I3&!S0&S1	0.0100	0.0010	0.4661	0.0783
I2(HL)	Z(HL)	!I0&I1&!I3&!S0&S1	0.0100	0.0010	0.4661	0.0783
I2(HL)	Z(HL)	!I0&I1&I3&!S0&S1	0.0100	0.0010	0.4663	0.0784
I2(HL)	Z(HL)	I0&!I1&!I3&!S0&S1	0.0100	0.0010	0.4661	0.0783

continues on next page

Table 214 – continued from previous page

I2(HL)	Z(HL)	I0&!I1&I3&!S0&S1	0.0100	0.0010	0.4661	0.0783
I2(HL)	Z(HL)	I0&I1&!I3&!S0&S1	0.0100	0.0010	0.4661	0.0783
I2(HL)	Z(HL)	I0&I1&I3&!S0&S1	0.0100	0.0010	0.4661	0.0783
I2(LH)	Z(LH)	!I0&!I1&!I3&!S0&S1	0.0100	0.0010	0.4794	0.0592
I2(LH)	Z(LH)	!I0&!I1&I3&!S0&S1	0.0100	0.0010	0.4795	0.0592
I2(LH)	Z(LH)	!I0&I1&!I3&!S0&S1	0.0100	0.0010	0.4795	0.0594
I2(LH)	Z(LH)	!I0&I1&I3&!S0&S1	0.0100	0.0010	0.4794	0.0592
I2(LH)	Z(LH)	I0&!I1&!I3&!S0&S1	0.0100	0.0010	0.4795	0.0594
I2(LH)	Z(LH)	I0&!I1&I3&!S0&S1	0.0100	0.0010	0.4795	0.0594
I2(LH)	Z(LH)	I0&I1&!I3&!S0&S1	0.0100	0.0010	0.4795	0.0590
I2(LH)	Z(LH)	I0&I1&I3&!S0&S1	0.0100	0.0010	0.4795	0.0593
S0(HL)	Z(LH)	!I0&!I1&I2&!I3&S1	0.0100	0.0010	0.5341	0.0592
S0(HL)	Z(LH)	!I0&I1&I2&!I3&S1	0.0100	0.0010	0.5225	0.0594
S0(HL)	Z(LH)	I0&!I1&!I2&!I3&!S1	0.0100	0.0010	0.5302	0.0586
S0(HL)	Z(LH)	I0&!I1&!I2&I3&!S1	0.0100	0.0010	0.5186	0.0586
S0(HL)	Z(LH)	I0&!I1&I2&!I3&!S1	0.0100	0.0010	0.5385	0.0589
S0(HL)	Z(LH)	I0&!I1&I2&!I3&S1	0.0100	0.0010	0.5419	0.0597
S0(HL)	Z(LH)	I0&!I1&I2&I3&!S1	0.0100	0.0010	0.5270	0.0587
S0(HL)	Z(LH)	I0&I1&I2&!I3&S1	0.0100	0.0010	0.5306	0.0592
S0(HL)	Z(HL)	!I0&!I1&!I2&I3&S1	0.0100	0.0010	0.4630	0.0777
S0(HL)	Z(HL)	!I0&I1&!I2&!I3&!S1	0.0100	0.0010	0.4601	0.0766
S0(HL)	Z(HL)	!I0&I1&!I2&I3&!S1	0.0100	0.0010	0.4521	0.0765
S0(HL)	Z(HL)	!I0&I1&!I2&I3&S1	0.0100	0.0010	0.4550	0.0775
S0(HL)	Z(HL)	!I0&I1&I2&!I3&!S1	0.0100	0.0010	0.4661	0.0767
S0(HL)	Z(HL)	!I0&I1&I2&I3&!S1	0.0100	0.0010	0.4582	0.0767
S0(HL)	Z(HL)	I0&!I1&!I2&I3&S1	0.0100	0.0010	0.4686	0.0778
S0(HL)	Z(HL)	I0&I1&!I2&I3&S1	0.0100	0.0010	0.4609	0.0775
S0(LH)	Z(LH)	!I0&!I1&!I2&I3&S1	0.0100	0.0010	0.4409	0.0590
S0(LH)	Z(LH)	!I0&I1&!I2&!I3&!S1	0.0100	0.0010	0.4417	0.0583
S0(LH)	Z(LH)	!I0&I1&!I2&I3&!S1	0.0100	0.0010	0.4405	0.0583
S0(LH)	Z(LH)	!I0&I1&!I2&I3&S1	0.0100	0.0010	0.4395	0.0589
S0(LH)	Z(LH)	!I0&I1&I2&!I3&!S1	0.0100	0.0010	0.4417	0.0582
S0(LH)	Z(LH)	!I0&I1&I2&I3&!S1	0.0100	0.0010	0.4414	0.0583
S0(LH)	Z(LH)	I0&!I1&!I2&I3&S1	0.0100	0.0010	0.4416	0.0586
S0(LH)	Z(LH)	I0&I1&!I2&I3&S1	0.0100	0.0010	0.4408	0.0590
S0(LH)	Z(HL)	!I0&!I1&I2&!I3&S1	0.0100	0.0010	0.4494	0.0781
S0(LH)	Z(HL)	!I0&I1&I2&!I3&S1	0.0100	0.0010	0.4445	0.0781
S0(LH)	Z(HL)	I0&!I1&!I2&!I3&!S1	0.0100	0.0010	0.4433	0.0774
S0(LH)	Z(HL)	I0&!I1&!I2&I3&!S1	0.0100	0.0010	0.4387	0.0773
S0(LH)	Z(HL)	I0&!I1&I2&!I3&!S1	0.0100	0.0010	0.4447	0.0774
S0(LH)	Z(HL)	I0&!I1&I2&!I3&S1	0.0100	0.0010	0.4510	0.0783
S0(LH)	Z(HL)	I0&!I1&I2&I3&!S1	0.0100	0.0010	0.4428	0.0772
S0(LH)	Z(HL)	I0&I1&I2&!I3&S1	0.0100	0.0010	0.4486	0.0781
I3(LH)	Z(LH)	!I0&!I1&!I2&S0&S1	0.0100	0.0010	0.4680	0.0591
I3(LH)	Z(LH)	!I0&!I1&I2&S0&S1	0.0100	0.0010	0.4680	0.0590
I3(LH)	Z(LH)	!I0&I1&!I2&S0&S1	0.0100	0.0010	0.4680	0.0589
I3(LH)	Z(LH)	!I0&I1&I2&S0&S1	0.0100	0.0010	0.4680	0.0590
I3(LH)	Z(LH)	I0&!I1&!I2&S0&S1	0.0100	0.0010	0.4680	0.0589
I3(LH)	Z(LH)	I0&!I1&I2&S0&S1	0.0100	0.0010	0.4680	0.0589
I3(LH)	Z(LH)	I0&I1&!I2&S0&S1	0.0100	0.0010	0.4680	0.0589
I3(LH)	Z(LH)	I0&I1&I2&S0&S1	0.0100	0.0010	0.4680	0.0590
I3(HL)	Z(HL)	!I0&!I1&!I2&S0&S1	0.0100	0.0010	0.4591	0.0781

continues on next page

Table 214 – continued from previous page

I3(HL)	Z(HL)	!I0&!I1&I2&S0&S1	0.0100	0.0010	0.4591	0.0781
I3(HL)	Z(HL)	!I0&I1&!I2&S0&S1	0.0100	0.0010	0.4591	0.0781
I3(HL)	Z(HL)	!I0&I1&I2&S0&S1	0.0100	0.0010	0.4591	0.0781
I3(HL)	Z(HL)	I0&!I1&!I2&S0&S1	0.0100	0.0010	0.4591	0.0781
I3(HL)	Z(HL)	I0&!I1&I2&S0&S1	0.0100	0.0010	0.4591	0.0781
I3(HL)	Z(HL)	I0&I1&!I2&S0&S1	0.0100	0.0010	0.4591	0.0781
I3(HL)	Z(HL)	I0&I1&I2&S0&S1	0.0100	0.0010	0.4591	0.0781
S1(LH)	Z(HL)	!I0&I1&!I2&!I3&S0	0.0100	0.0010	0.2915	0.0733
S1(LH)	Z(HL)	!I0&I1&I2&!I3&S0	0.0100	0.0010	0.2915	0.0733
S1(LH)	Z(HL)	I0&!I1&!I2&!I3&!S0	0.0100	0.0010	0.2917	0.0732
S1(LH)	Z(HL)	I0&!I1&!I2&I3&!S0	0.0100	0.0010	0.2917	0.0732
S1(LH)	Z(HL)	I0&I1&!I2&!I3&!S0	0.0100	0.0010	0.2917	0.0732
S1(LH)	Z(HL)	I0&I1&!I2&!I3&S0	0.0100	0.0010	0.2915	0.0733
S1(LH)	Z(HL)	I0&I1&!I2&I3&!S0	0.0100	0.0010	0.2917	0.0732
S1(LH)	Z(HL)	I0&I1&I2&!I3&S0	0.0100	0.0010	0.2915	0.0733
S1(LH)	Z(LH)	!I0&!I1&!I2&I3&S0	0.0100	0.0010	0.3077	0.0582
S1(LH)	Z(LH)	!I0&!I1&I2&!I3&!S0	0.0100	0.0010	0.3066	0.0584
S1(LH)	Z(LH)	!I0&!I1&I2&I3&!S0	0.0100	0.0010	0.3065	0.0584
S1(LH)	Z(LH)	!I0&!I1&I2&I3&S0	0.0100	0.0010	0.3076	0.0586
S1(LH)	Z(LH)	!I0&I1&I2&!I3&!S0	0.0100	0.0010	0.3067	0.0583
S1(LH)	Z(LH)	!I0&I1&I2&I3&!S0	0.0100	0.0010	0.3065	0.0584
S1(LH)	Z(LH)	I0&!I1&!I2&I3&S0	0.0100	0.0010	0.3076	0.0586
S1(LH)	Z(LH)	I0&!I1&I2&I3&S0	0.0100	0.0010	0.3077	0.0582
S1(HL)	Z(HL)	!I0&!I1&!I2&I3&S0	0.0100	0.0010	0.2967	0.0681
S1(HL)	Z(HL)	!I0&!I1&I2&!I3&!S0	0.0100	0.0010	0.2972	0.0682
S1(HL)	Z(HL)	!I0&!I1&I2&I3&!S0	0.0100	0.0010	0.2972	0.0682
S1(HL)	Z(HL)	!I0&!I1&I2&I3&S0	0.0100	0.0010	0.2967	0.0681
S1(HL)	Z(HL)	!I0&I1&I2&!I3&!S0	0.0100	0.0010	0.2972	0.0682
S1(HL)	Z(HL)	!I0&I1&I2&I3&!S0	0.0100	0.0010	0.2972	0.0682
S1(HL)	Z(HL)	I0&!I1&!I2&I3&S0	0.0100	0.0010	0.2967	0.0681
S1(HL)	Z(HL)	I0&!I1&I2&I3&S0	0.0100	0.0010	0.2967	0.0681
S1(HL)	Z(LH)	!I0&I1&!I2&!I3&S0	0.0100	0.0010	0.3655	0.0577
S1(HL)	Z(LH)	!I0&I1&I2&!I3&S0	0.0100	0.0010	0.3655	0.0577
S1(HL)	Z(LH)	I0&!I1&!I2&!I3&!S0	0.0100	0.0010	0.3650	0.0578
S1(HL)	Z(LH)	I0&!I1&!I2&I3&!S0	0.0100	0.0010	0.3650	0.0578
S1(HL)	Z(LH)	I0&I1&!I2&!I3&!S0	0.0100	0.0010	0.3651	0.0577
S1(HL)	Z(LH)	I0&I1&!I2&!I3&S0	0.0100	0.0010	0.3655	0.0577
S1(HL)	Z(LH)	I0&I1&!I2&I3&!S0	0.0100	0.0010	0.3650	0.0578
S1(HL)	Z(LH)	I0&I1&I2&!I3&S0	0.0100	0.0010	0.3655	0.0577
I1(LH)	Z(LH)	!I0&!I2&!I3&S0&!S1	0.0100	0.0010	0.4654	0.0585
I1(LH)	Z(LH)	!I0&!I2&I3&S0&!S1	0.0100	0.0010	0.4654	0.0585
I1(LH)	Z(LH)	!I0&I2&!I3&S0&!S1	0.0100	0.0010	0.4654	0.0585
I1(LH)	Z(LH)	!I0&I2&I3&S0&!S1	0.0100	0.0010	0.4654	0.0585
I1(LH)	Z(LH)	I0&!I2&!I3&S0&!S1	0.0100	0.0010	0.4654	0.0585
I1(LH)	Z(LH)	I0&!I2&I3&S0&!S1	0.0100	0.0010	0.4654	0.0585
I1(LH)	Z(LH)	I0&I2&!I3&S0&!S1	0.0100	0.0010	0.4654	0.0585
I1(LH)	Z(LH)	I0&I2&I3&S0&!S1	0.0100	0.0010	0.4654	0.0585
I1(HL)	Z(HL)	!I0&!I2&!I3&S0&!S1	0.0100	0.0010	0.4528	0.0773
I1(HL)	Z(HL)	!I0&!I2&I3&S0&!S1	0.0100	0.0010	0.4528	0.0772
I1(HL)	Z(HL)	!I0&I2&!I3&S0&!S1	0.0100	0.0010	0.4528	0.0773
I1(HL)	Z(HL)	!I0&I2&I3&S0&!S1	0.0100	0.0010	0.4528	0.0772
I1(HL)	Z(HL)	I0&!I2&!I3&S0&!S1	0.0100	0.0010	0.4528	0.0773

continues on next page

Table 214 – continued from previous page

I1(HL)	Z(HL)	I0&!I2&I3&S0&!S1	0.0100	0.0010	0.4528	0.0772
I1(HL)	Z(HL)	I0&I2&!I3&S0&!S1	0.0100	0.0010	0.4528	0.0773
I1(HL)	Z(HL)	I0&I2&I3&S0&!S1	0.0100	0.0010	0.4528	0.0772
I0(LH)	Z(LH)	!I1&!I2&!I3&!S0&!S1	0.0100	0.0010	0.4685	0.0587
I0(LH)	Z(LH)	!I1&!I2&I3&!S0&!S1	0.0100	0.0010	0.4685	0.0584
I0(LH)	Z(LH)	!I1&I2&!I3&!S0&!S1	0.0100	0.0010	0.4682	0.0588
I0(LH)	Z(LH)	!I1&I2&I3&!S0&!S1	0.0100	0.0010	0.4682	0.0588
I0(LH)	Z(LH)	I1&!I2&!I3&!S0&!S1	0.0100	0.0010	0.4683	0.0586
I0(LH)	Z(LH)	I1&!I2&I3&!S0&!S1	0.0100	0.0010	0.4683	0.0589
I0(LH)	Z(LH)	I1&I2&!I3&!S0&!S1	0.0100	0.0010	0.4682	0.0587
I0(LH)	Z(LH)	I1&I2&I3&!S0&!S1	0.0100	0.0010	0.4682	0.0587
I0(HL)	Z(HL)	!I1&!I2&!I3&!S0&!S1	0.0100	0.0010	0.4508	0.0771
I0(HL)	Z(HL)	!I1&!I2&I3&!S0&!S1	0.0100	0.0010	0.4508	0.0771
I0(HL)	Z(HL)	!I1&I2&!I3&!S0&!S1	0.0100	0.0010	0.4508	0.0771
I0(HL)	Z(HL)	!I1&I2&I3&!S0&!S1	0.0100	0.0010	0.4508	0.0771
I0(HL)	Z(HL)	I1&!I2&!I3&!S0&!S1	0.0100	0.0010	0.4508	0.0771
I0(HL)	Z(HL)	I1&!I2&I3&!S0&!S1	0.0100	0.0010	0.4508	0.0771
I0(HL)	Z(HL)	I1&I2&!I3&!S0&!S1	0.0100	0.0010	0.4508	0.0771
I0(HL)	Z(HL)	I1&I2&I3&!S0&!S1	0.0100	0.0010	0.4508	0.0771

DYNAMIC ENERGY

Input Pin	When Condition	Tin (ns)	Output	Out Load (pf)	Energy (uW/MHz)
S1	!I0&I1&!I2&!I3&S0	0.0100	Z(HL)	0.0010	1.0687
S1	!I0&I1&I2&!I3&S0	0.0100	Z(HL)	0.0010	1.0686
S1	I0&!I1&!I2&!I3&!S0	0.0100	Z(HL)	0.0010	1.0693
S1	I0&!I1&!I2&I3&!S0	0.0100	Z(HL)	0.0010	1.0693
S1	I0&I1&!I2&!I3&!S0	0.0100	Z(HL)	0.0010	1.0693
S1	I0&I1&!I2&!I3&S0	0.0100	Z(HL)	0.0010	1.0687
S1	I0&I1&!I2&I3&!S0	0.0100	Z(HL)	0.0010	1.0693
S1	I0&I1&I2&!I3&S0	0.0100	Z(HL)	0.0010	1.0686
S1	!I0&!I1&!I2&I3&S0	0.0100	Z(HL)	0.0010	1.1591
S1	!I0&!I1&I2&!I3&!S0	0.0100	Z(HL)	0.0010	1.1598
S1	!I0&!I1&I2&I3&!S0	0.0100	Z(HL)	0.0010	1.1598
S1	!I0&!I1&I2&I3&S0	0.0100	Z(HL)	0.0010	1.1591
S1	!I0&I1&I2&!I3&!S0	0.0100	Z(HL)	0.0010	1.1598
S1	!I0&I1&I2&I3&!S0	0.0100	Z(HL)	0.0010	1.1598
S1	I0&!I1&!I2&I3&S0	0.0100	Z(HL)	0.0010	1.1591
S1	I0&!I1&I2&I3&S0	0.0100	Z(HL)	0.0010	1.1591
S1	!I0&!I1&!I2&I3&S0	0.0100	Z(LH)	0.0010	0.6881
S1	!I0&!I1&I2&!I3&!S0	0.0100	Z(LH)	0.0010	0.6879
S1	!I0&!I1&I2&I3&!S0	0.0100	Z(LH)	0.0010	0.6881
S1	!I0&!I1&I2&I3&S0	0.0100	Z(LH)	0.0010	0.6880
S1	!I0&I1&I2&!I3&!S0	0.0100	Z(LH)	0.0010	0.6881
S1	!I0&I1&I2&I3&!S0	0.0100	Z(LH)	0.0010	0.6881
S1	I0&!I1&!I2&I3&S0	0.0100	Z(LH)	0.0010	0.6880
S1	I0&!I1&I2&I3&S0	0.0100	Z(LH)	0.0010	0.6881

continues on next page

Table 215 – continued from previous page

S1	!I0&I1&!I2&!I3&S0	0.0100	Z(LH)	0.0010	0.9371
S1	!I0&I1&I2&!I3&S0	0.0100	Z(LH)	0.0010	0.9371
S1	I0&!I1&!I2&!I3&!S0	0.0100	Z(LH)	0.0010	0.9369
S1	I0&!I1&!I2&I3&!S0	0.0100	Z(LH)	0.0010	0.9369
S1	I0&I1&!I2&!I3&!S0	0.0100	Z(LH)	0.0010	0.9367
S1	I0&I1&!I2&!I3&S0	0.0100	Z(LH)	0.0010	0.9371
S1	I0&I1&!I2&I3&!S0	0.0100	Z(LH)	0.0010	0.9368
S1	I0&I1&I2&!I3&S0	0.0100	Z(LH)	0.0010	0.9371
I0	!I1&!I2&!I3&!S0&!S1	0.0100	Z(LH)	0.0010	0.8541
I0	!I1&!I2&I3&!S0&!S1	0.0100	Z(LH)	0.0010	0.8539
I0	!I1&I2&!I3&!S0&!S1	0.0100	Z(LH)	0.0010	0.8539
I0	!I1&I2&I3&!S0&!S1	0.0100	Z(LH)	0.0010	0.8539
I0	I1&!I2&!I3&!S0&!S1	0.0100	Z(LH)	0.0010	0.8537
I0	I1&!I2&I3&!S0&!S1	0.0100	Z(LH)	0.0010	0.8539
I0	I1&I2&!I3&!S0&!S1	0.0100	Z(LH)	0.0010	0.8539
I0	I1&I2&I3&!S0&!S1	0.0100	Z(LH)	0.0010	0.8539
I3	!I0&!I1&!I2&S0&S1	0.0100	Z(LH)	0.0010	0.7997
I3	!I0&!I1&I2&S0&S1	0.0100	Z(LH)	0.0010	0.7994
I3	!I0&I1&!I2&S0&S1	0.0100	Z(LH)	0.0010	0.7994
I3	!I0&I1&I2&S0&S1	0.0100	Z(LH)	0.0010	0.7994
I3	I0&!I1&!I2&S0&S1	0.0100	Z(LH)	0.0010	0.7991
I3	I0&!I1&I2&S0&S1	0.0100	Z(LH)	0.0010	0.7994
I3	I0&I1&!I2&S0&S1	0.0100	Z(LH)	0.0010	0.7994
I3	I0&I1&I2&S0&S1	0.0100	Z(LH)	0.0010	0.7994
I2	!I0&!I1&!I3&!S0&S1	0.0100	Z(HL)	0.0010	1.4263
I2	!I0&!I1&I3&!S0&S1	0.0100	Z(HL)	0.0010	1.4263
I2	!I0&I1&!I3&!S0&S1	0.0100	Z(HL)	0.0010	1.4263
I2	!I0&I1&I3&!S0&S1	0.0100	Z(HL)	0.0010	1.4264
I2	I0&!I1&!I3&!S0&S1	0.0100	Z(HL)	0.0010	1.4263
I2	I0&!I1&I3&!S0&S1	0.0100	Z(HL)	0.0010	1.4263
I2	I0&I1&!I3&!S0&S1	0.0100	Z(HL)	0.0010	1.4263
I2	I0&I1&I3&!S0&S1	0.0100	Z(HL)	0.0010	1.4263
I1	!I0&!I2&!I3&S0&!S1	0.0100	Z(LH)	0.0010	0.8238
I1	!I0&!I2&I3&S0&!S1	0.0100	Z(LH)	0.0010	0.8238
I1	!I0&I2&!I3&S0&!S1	0.0100	Z(LH)	0.0010	0.8238
I1	!I0&I2&I3&S0&!S1	0.0100	Z(LH)	0.0010	0.8238
I1	I0&!I2&!I3&S0&!S1	0.0100	Z(LH)	0.0010	0.8238
I1	I0&!I2&I3&S0&!S1	0.0100	Z(LH)	0.0010	0.8238
I1	I0&I2&!I3&S0&!S1	0.0100	Z(LH)	0.0010	0.8238
I1	I0&I2&I3&S0&!S1	0.0100	Z(LH)	0.0010	0.8238
I3	!I0&!I1&!I2&S0&S1	0.0100	Z(HL)	0.0010	1.4360
I3	!I0&!I1&I2&S0&S1	0.0100	Z(HL)	0.0010	1.4360
I3	!I0&I1&!I2&S0&S1	0.0100	Z(HL)	0.0010	1.4360
I3	!I0&I1&I2&S0&S1	0.0100	Z(HL)	0.0010	1.4360
I3	I0&!I1&!I2&S0&S1	0.0100	Z(HL)	0.0010	1.4360
I3	I0&!I1&I2&S0&S1	0.0100	Z(HL)	0.0010	1.4360
I3	I0&I1&!I2&S0&S1	0.0100	Z(HL)	0.0010	1.4360
I3	I0&I1&I2&S0&S1	0.0100	Z(HL)	0.0010	1.4360
I0	!I1&!I2&!I3&!S0&!S1	0.0100	Z(HL)	0.0010	1.3541
I0	!I1&!I2&I3&!S0&!S1	0.0100	Z(HL)	0.0010	1.3541
I0	!I1&I2&!I3&!S0&!S1	0.0100	Z(HL)	0.0010	1.3541
I0	!I1&I2&I3&!S0&!S1	0.0100	Z(HL)	0.0010	1.3541

continues on next page

Table 215 – continued from previous page

I0	I1&!I2&!I3&!S0&!S1	0.0100	Z(HL)	0.0010	1.3541
I0	I1&!I2&I3&!S0&!S1	0.0100	Z(HL)	0.0010	1.3541
I0	I1&I2&!I3&!S0&!S1	0.0100	Z(HL)	0.0010	1.3541
I0	I1&I2&I3&!S0&!S1	0.0100	Z(HL)	0.0010	1.3541
S0	!I0&!I1&I2&!I3&S1	0.0100	Z(LH)	0.0010	1.1812
S0	!I0&I1&I2&!I3&S1	0.0100	Z(LH)	0.0010	1.3139
S0	I0&!I1&!I2&!I3&!S1	0.0100	Z(LH)	0.0010	1.2035
S0	I0&!I1&!I2&I3&!S1	0.0100	Z(LH)	0.0010	1.3460
S0	I0&!I1&I2&!I3&!S1	0.0100	Z(LH)	0.0010	1.3432
S0	I0&!I1&I2&!I3&S1	0.0100	Z(LH)	0.0010	1.3133
S0	I0&!I1&I2&I3&!S1	0.0100	Z(LH)	0.0010	1.1962
S0	I0&I1&I2&!I3&S1	0.0100	Z(LH)	0.0010	1.1736
S0	!I0&!I1&!I2&I3&S1	0.0100	Z(LH)	0.0010	0.7730
S0	!I0&I1&!I2&!I3&!S1	0.0100	Z(LH)	0.0010	0.8004
S0	!I0&I1&!I2&I3&!S1	0.0100	Z(LH)	0.0010	0.8477
S0	!I0&I1&!I2&I3&S1	0.0100	Z(LH)	0.0010	0.8153
S0	!I0&I1&I2&!I3&!S1	0.0100	Z(LH)	0.0010	1.0556
S0	!I0&I1&I2&I3&!S1	0.0100	Z(LH)	0.0010	0.8005
S0	I0&!I1&!I2&I3&S1	0.0100	Z(LH)	0.0010	1.0143
S0	I0&I1&!I2&I3&S1	0.0100	Z(LH)	0.0010	0.7736
I2	!I0&!I1&!I3&!S0&S1	0.0100	Z(LH)	0.0010	0.8382
I2	!I0&!I1&I3&!S0&S1	0.0100	Z(LH)	0.0010	0.8384
I2	!I0&I1&!I3&!S0&S1	0.0100	Z(LH)	0.0010	0.8384
I2	!I0&I1&I3&!S0&S1	0.0100	Z(LH)	0.0010	0.8383
I2	I0&!I1&!I3&!S0&S1	0.0100	Z(LH)	0.0010	0.8385
I2	I0&!I1&I3&!S0&S1	0.0100	Z(LH)	0.0010	0.8384
I2	I0&I1&!I3&!S0&S1	0.0100	Z(LH)	0.0010	0.8382
I2	I0&I1&I3&!S0&S1	0.0100	Z(LH)	0.0010	0.8388
S0	!I0&!I1&!I2&I3&S1	0.0100	Z(HL)	0.0010	1.5958
S0	!I0&I1&!I2&!I3&!S1	0.0100	Z(HL)	0.0010	1.5380
S0	!I0&I1&!I2&I3&!S1	0.0100	Z(HL)	0.0010	1.6851
S0	!I0&I1&!I2&I3&S1	0.0100	Z(HL)	0.0010	1.7336
S0	!I0&I1&I2&!I3&!S1	0.0100	Z(HL)	0.0010	1.6684
S0	!I0&I1&I2&I3&!S1	0.0100	Z(HL)	0.0010	1.5326
S0	I0&!I1&!I2&I3&S1	0.0100	Z(HL)	0.0010	1.7182
S0	I0&I1&!I2&I3&S1	0.0100	Z(HL)	0.0010	1.5901
S0	!I0&!I1&I2&!I3&S1	0.0100	Z(HL)	0.0010	1.3815
S0	!I0&I1&I2&!I3&S1	0.0100	Z(HL)	0.0010	1.4173
S0	I0&!I1&!I2&!I3&!S1	0.0100	Z(HL)	0.0010	1.3208
S0	I0&!I1&!I2&I3&!S1	0.0100	Z(HL)	0.0010	1.3612
S0	I0&!I1&I2&!I3&!S1	0.0100	Z(HL)	0.0010	1.5847
S0	I0&!I1&I2&!I3&S1	0.0100	Z(HL)	0.0010	1.6324
S0	I0&!I1&I2&I3&!S1	0.0100	Z(HL)	0.0010	1.3200
S0	I0&I1&I2&!I3&S1	0.0100	Z(HL)	0.0010	1.3810
I1	!I0&!I2&!I3&S0&!S1	0.0100	Z(HL)	0.0010	1.3851
I1	!I0&!I2&I3&S0&!S1	0.0100	Z(HL)	0.0010	1.3851
I1	!I0&I2&!I3&S0&!S1	0.0100	Z(HL)	0.0010	1.3851
I1	!I0&I2&I3&S0&!S1	0.0100	Z(HL)	0.0010	1.3851
I1	I0&!I2&!I3&S0&!S1	0.0100	Z(HL)	0.0010	1.3851
I1	I0&!I2&I3&S0&!S1	0.0100	Z(HL)	0.0010	1.3851
I1	I0&I2&!I3&S0&!S1	0.0100	Z(HL)	0.0010	1.3851
I1	I0&I2&I3&S0&!S1	0.0100	Z(HL)	0.0010	1.3851

continues on next page

Table 215 – continued from previous page

I3(HL)	!I0&!I1&!I2&!S0&!S1	0.0100	n/a	n/a	0.1005
I3(HL)	!I0&!I1&!I2&!S0&S1	0.0100	n/a	n/a	0.1005
I3(HL)	!I0&!I1&!I2&S0&!S1	0.0100	n/a	n/a	0.3000
I3(HL)	!I0&!I1&I2&!S0&!S1	0.0100	n/a	n/a	0.1004
I3(HL)	!I0&!I1&I2&S0&!S1	0.0100	n/a	n/a	0.3000
I3(HL)	!I0&I1&!I2&!S0&!S1	0.0100	n/a	n/a	0.1005
I3(HL)	!I0&I1&!I2&!S0&S1	0.0100	n/a	n/a	0.1005
I3(HL)	!I0&I1&I2&!S0&!S1	0.0100	n/a	n/a	0.1004
I3(HL)	I0&!I1&!I2&!S0&S1	0.0100	n/a	n/a	0.1004
I3(HL)	I0&!I1&!I2&S0&!S1	0.0100	n/a	n/a	0.3000
I3(HL)	I0&!I1&I2&S0&!S1	0.0100	n/a	n/a	0.3000
I3(HL)	I0&I1&!I2&!S0&S1	0.0100	n/a	n/a	0.1004
I3(HL)	!I0&!I1&I2&!S0&S1	0.0100	n/a	n/a	0.1004
I3(HL)	!I0&I1&!I2&S0&!S1	0.0100	n/a	n/a	0.3000
I3(HL)	!I0&I1&I2&!S0&S1	0.0100	n/a	n/a	0.1004
I3(HL)	!I0&I1&I2&S0&!S1	0.0100	n/a	n/a	0.3000
I3(HL)	I0&!I1&!I2&!S0&!S1	0.0100	n/a	n/a	0.1004
I3(HL)	I0&!I1&I2&!S0&!S1	0.0100	n/a	n/a	0.1004
I3(HL)	I0&!I1&I2&!S0&S1	0.0100	n/a	n/a	0.1004
I3(HL)	I0&I1&!I2&!S0&!S1	0.0100	n/a	n/a	0.1004
I3(HL)	I0&I1&!I2&S0&!S1	0.0100	n/a	n/a	0.3000
I3(HL)	I0&I1&I2&!S0&!S1	0.0100	n/a	n/a	0.1004
I3(HL)	I0&I1&I2&!S0&S1	0.0100	n/a	n/a	0.1004
I3(HL)	I0&I1&I2&S0&!S1	0.0100	n/a	n/a	0.3000
I2(LH)	!I0&!I1&!I3&!S0&!S1	0.0100	n/a	n/a	0.1055
I2(LH)	!I0&!I1&!I3&S0&!S1	0.0100	n/a	n/a	0.0110
I2(LH)	!I0&!I1&!I3&S0&S1	0.0100	n/a	n/a	0.0110
I2(LH)	!I0&!I1&I3&!S0&!S1	0.0100	n/a	n/a	0.1055
I2(LH)	!I0&!I1&I3&S0&!S1	0.0100	n/a	n/a	0.0110
I2(LH)	!I0&I1&!I3&!S0&!S1	0.0100	n/a	n/a	0.1055
I2(LH)	!I0&I1&!I3&S0&S1	0.0100	n/a	n/a	0.0110
I2(LH)	!I0&I1&I3&!S0&!S1	0.0100	n/a	n/a	0.1055
I2(LH)	I0&!I1&!I3&S0&!S1	0.0100	n/a	n/a	0.0110
I2(LH)	I0&!I1&!I3&S0&S1	0.0100	n/a	n/a	0.0110
I2(LH)	I0&!I1&I3&S0&!S1	0.0100	n/a	n/a	0.0110
I2(LH)	I0&I1&!I3&S0&S1	0.0100	n/a	n/a	0.0110
I2(LH)	!I0&!I1&I3&S0&S1	0.0100	n/a	n/a	0.0112
I2(LH)	!I0&I1&!I3&S0&!S1	0.0100	n/a	n/a	0.0112
I2(LH)	!I0&I1&I3&S0&!S1	0.0100	n/a	n/a	0.0112
I2(LH)	!I0&I1&I3&S0&S1	0.0100	n/a	n/a	0.0112
I2(LH)	I0&!I1&!I3&!S0&!S1	0.0100	n/a	n/a	0.1055
I2(LH)	I0&!I1&I3&!S0&!S1	0.0100	n/a	n/a	0.1055
I2(LH)	I0&!I1&I3&S0&S1	0.0100	n/a	n/a	0.0112
I2(LH)	I0&I1&!I3&!S0&!S1	0.0100	n/a	n/a	0.1055
I2(LH)	I0&I1&!I3&S0&!S1	0.0100	n/a	n/a	0.0112
I2(LH)	I0&I1&I3&!S0&!S1	0.0100	n/a	n/a	0.1055
I2(LH)	I0&I1&I3&S0&!S1	0.0100	n/a	n/a	0.0112
I2(LH)	I0&I1&I3&S0&S1	0.0100	n/a	n/a	0.0112
I1(LH)	!I0&!I2&!I3&!S0&!S1	0.0100	n/a	n/a	0.0094
I1(LH)	!I0&!I2&!I3&!S0&S1	0.0100	n/a	n/a	0.0095
I1(LH)	!I0&!I2&!I3&S0&S1	0.0100	n/a	n/a	0.0625
I1(LH)	!I0&!I2&I3&!S0&!S1	0.0100	n/a	n/a	0.0094

continues on next page

Table 215 – continued from previous page

I1(LH)	!I0&!I2&I3&!S0&S1	0.0100	n/a	n/a	0.0095
I1(LH)	!I0&I2&!I3&!S0&!S1	0.0100	n/a	n/a	0.0094
I1(LH)	!I0&I2&!I3&S0&S1	0.0100	n/a	n/a	0.0625
I1(LH)	!I0&I2&I3&!S0&!S1	0.0100	n/a	n/a	0.0094
I1(LH)	I0&!I2&!I3&!S0&S1	0.0100	n/a	n/a	0.0095
I1(LH)	I0&!I2&!I3&S0&S1	0.0100	n/a	n/a	0.0625
I1(LH)	I0&!I2&I3&!S0&S1	0.0100	n/a	n/a	0.0095
I1(LH)	I0&I2&!I3&S0&S1	0.0100	n/a	n/a	0.0625
I1(LH)	!I0&!I2&I3&S0&S1	0.0100	n/a	n/a	0.0625
I1(LH)	!I0&I2&!I3&!S0&S1	0.0100	n/a	n/a	0.0094
I1(LH)	!I0&I2&I3&!S0&S1	0.0100	n/a	n/a	0.0094
I1(LH)	!I0&I2&I3&S0&S1	0.0100	n/a	n/a	0.0625
I1(LH)	I0&!I2&!I3&!S0&!S1	0.0100	n/a	n/a	0.0094
I1(LH)	I0&!I2&I3&!S0&!S1	0.0100	n/a	n/a	0.0094
I1(LH)	I0&!I2&I3&S0&S1	0.0100	n/a	n/a	0.0626
I1(LH)	I0&I2&!I3&!S0&!S1	0.0100	n/a	n/a	0.0094
I1(LH)	I0&I2&!I3&!S0&S1	0.0100	n/a	n/a	0.0094
I1(LH)	I0&I2&I3&!S0&!S1	0.0100	n/a	n/a	0.0094
I1(LH)	I0&I2&I3&!S0&S1	0.0100	n/a	n/a	0.0094
I1(LH)	I0&I2&I3&S0&S1	0.0100	n/a	n/a	0.0625
S0(HL)	!I0&!I1&!I2&!I3&!S1	0.0100	n/a	n/a	0.3166
S0(HL)	!I0&!I1&!I2&!I3&S1	0.0100	n/a	n/a	0.3166
S0(HL)	!I0&!I1&!I2&I3&!S1	0.0100	n/a	n/a	0.4666
S0(HL)	!I0&!I1&I2&!I3&!S1	0.0100	n/a	n/a	0.4479
S0(HL)	!I0&!I1&I2&I3&!S1	0.0100	n/a	n/a	0.3111
S0(HL)	!I0&I1&!I2&!I3&S1	0.0100	n/a	n/a	0.4570
S0(HL)	I0&!I1&!I2&!I3&S1	0.0100	n/a	n/a	0.4397
S0(HL)	I0&I1&!I2&!I3&S1	0.0100	n/a	n/a	0.3110
S0(HL)	!I0&!I1&I2&I3&S1	0.0100	n/a	n/a	0.3111
S0(HL)	!I0&I1&I2&I3&S1	0.0100	n/a	n/a	0.4518
S0(HL)	I0&!I1&I2&I3&S1	0.0100	n/a	n/a	0.4322
S0(HL)	I0&I1&!I2&!I3&!S1	0.0100	n/a	n/a	0.3110
S0(HL)	I0&I1&!I2&I3&!S1	0.0100	n/a	n/a	0.4612
S0(HL)	I0&I1&I2&!I3&!S1	0.0100	n/a	n/a	0.4400
S0(HL)	I0&I1&I2&I3&!S1	0.0100	n/a	n/a	0.3056
S0(HL)	I0&I1&I2&I3&S1	0.0100	n/a	n/a	0.3057
I1(HL)	!I0&!I2&!I3&!S0&!S1	0.0100	n/a	n/a	0.1052
I1(HL)	!I0&!I2&!I3&!S0&S1	0.0100	n/a	n/a	0.1052
I1(HL)	!I0&!I2&!I3&S0&S1	0.0100	n/a	n/a	0.2958
I1(HL)	!I0&!I2&I3&!S0&!S1	0.0100	n/a	n/a	0.1052
I1(HL)	!I0&!I2&I3&!S0&S1	0.0100	n/a	n/a	0.1052
I1(HL)	!I0&I2&!I3&!S0&!S1	0.0100	n/a	n/a	0.1051
I1(HL)	!I0&I2&!I3&S0&S1	0.0100	n/a	n/a	0.2958
I1(HL)	!I0&I2&I3&!S0&!S1	0.0100	n/a	n/a	0.1051
I1(HL)	I0&!I2&!I3&!S0&S1	0.0100	n/a	n/a	0.1051
I1(HL)	I0&!I2&!I3&S0&S1	0.0100	n/a	n/a	0.2958
I1(HL)	I0&!I2&I3&!S0&S1	0.0100	n/a	n/a	0.1051
I1(HL)	I0&I2&!I3&S0&S1	0.0100	n/a	n/a	0.2958
I1(HL)	!I0&!I2&I3&S0&S1	0.0100	n/a	n/a	0.2958
I1(HL)	!I0&I2&!I3&!S0&S1	0.0100	n/a	n/a	0.1052
I1(HL)	!I0&I2&I3&!S0&S1	0.0100	n/a	n/a	0.1052
I1(HL)	!I0&I2&I3&S0&S1	0.0100	n/a	n/a	0.2958

continues on next page

Table 215 – continued from previous page

I1(HL)	I0&!I2&!I3&!S0&!S1	0.0100	n/a	n/a	0.1052
I1(HL)	I0&!I2&I3&!S0&!S1	0.0100	n/a	n/a	0.1052
I1(HL)	I0&!I2&I3&S0&S1	0.0100	n/a	n/a	0.2958
I1(HL)	I0&I2&!I3&!S0&!S1	0.0100	n/a	n/a	0.1052
I1(HL)	I0&I2&!I3&!S0&S1	0.0100	n/a	n/a	0.1052
I1(HL)	I0&I2&I3&!S0&!S1	0.0100	n/a	n/a	0.1052
I1(HL)	I0&I2&I3&!S0&S1	0.0100	n/a	n/a	0.1052
I1(HL)	I0&I2&I3&S0&S1	0.0100	n/a	n/a	0.2958
I3(LH)	!I0&!I1&!I2&!S0&!S1	0.0100	n/a	n/a	0.0119
I3(LH)	!I0&!I1&!I2&!S0&S1	0.0100	n/a	n/a	0.0119
I3(LH)	!I0&!I1&!I2&S0&!S1	0.0100	n/a	n/a	0.0703
I3(LH)	!I0&!I1&I2&!S0&!S1	0.0100	n/a	n/a	0.0119
I3(LH)	!I0&!I1&I2&S0&!S1	0.0100	n/a	n/a	0.0703
I3(LH)	!I0&I1&!I2&!S0&!S1	0.0100	n/a	n/a	0.0119
I3(LH)	!I0&I1&!I2&!S0&S1	0.0100	n/a	n/a	0.0119
I3(LH)	!I0&I1&I2&!S0&!S1	0.0100	n/a	n/a	0.0119
I3(LH)	I0&!I1&!I2&!S0&S1	0.0100	n/a	n/a	0.0119
I3(LH)	I0&!I1&!I2&S0&!S1	0.0100	n/a	n/a	0.0703
I3(LH)	I0&!I1&I2&S0&!S1	0.0100	n/a	n/a	0.0703
I3(LH)	I0&I1&!I2&!S0&S1	0.0100	n/a	n/a	0.0119
I3(LH)	!I0&!I1&I2&!S0&S1	0.0100	n/a	n/a	0.0120
I3(LH)	!I0&I1&!I2&S0&!S1	0.0100	n/a	n/a	0.0702
I3(LH)	!I0&I1&I2&!S0&S1	0.0100	n/a	n/a	0.0120
I3(LH)	!I0&I1&I2&S0&!S1	0.0100	n/a	n/a	0.0702
I3(LH)	I0&!I1&!I2&!S0&!S1	0.0100	n/a	n/a	0.0119
I3(LH)	I0&!I1&I2&!S0&!S1	0.0100	n/a	n/a	0.0120
I3(LH)	I0&!I1&I2&!S0&S1	0.0100	n/a	n/a	0.0120
I3(LH)	I0&I1&!I2&!S0&!S1	0.0100	n/a	n/a	0.0119
I3(LH)	I0&I1&!I2&S0&!S1	0.0100	n/a	n/a	0.0702
I3(LH)	I0&I1&I2&!S0&!S1	0.0100	n/a	n/a	0.0120
I3(LH)	I0&I1&I2&!S0&S1	0.0100	n/a	n/a	0.0120
I3(LH)	I0&I1&I2&S0&!S1	0.0100	n/a	n/a	0.0702
I0(HL)	!I1&!I2&!I3&!S0&S1	0.0100	n/a	n/a	0.2673
I0(HL)	!I1&!I2&!I3&S0&!S1	0.0100	n/a	n/a	0.1130
I0(HL)	!I1&!I2&!I3&S0&S1	0.0100	n/a	n/a	0.1130
I0(HL)	!I1&!I2&I3&!S0&S1	0.0100	n/a	n/a	0.2673
I0(HL)	!I1&!I2&I3&S0&!S1	0.0100	n/a	n/a	0.1130
I0(HL)	!I1&I2&!I3&S0&!S1	0.0100	n/a	n/a	0.1130
I0(HL)	!I1&I2&!I3&S0&S1	0.0100	n/a	n/a	0.1130
I0(HL)	!I1&I2&I3&S0&!S1	0.0100	n/a	n/a	0.1130
I0(HL)	I1&!I2&!I3&!S0&S1	0.0100	n/a	n/a	0.2673
I0(HL)	I1&!I2&!I3&S0&S1	0.0100	n/a	n/a	0.1130
I0(HL)	I1&!I2&I3&!S0&S1	0.0100	n/a	n/a	0.2673
I0(HL)	I1&I2&!I3&S0&S1	0.0100	n/a	n/a	0.1130
I0(HL)	!I1&!I2&I3&S0&S1	0.0100	n/a	n/a	0.1130
I0(HL)	!I1&I2&!I3&!S0&S1	0.0100	n/a	n/a	0.2673
I0(HL)	!I1&I2&I3&!S0&S1	0.0100	n/a	n/a	0.2673
I0(HL)	!I1&I2&I3&S0&S1	0.0100	n/a	n/a	0.1130
I0(HL)	I1&!I2&!I3&S0&!S1	0.0100	n/a	n/a	0.1130
I0(HL)	I1&!I2&I3&S0&!S1	0.0100	n/a	n/a	0.1130
I0(HL)	I1&!I2&I3&S0&S1	0.0100	n/a	n/a	0.1130
I0(HL)	I1&I2&!I3&!S0&S1	0.0100	n/a	n/a	0.2673

continues on next page

Table 215 – continued from previous page

I0(HL)	I1&I2&!I3&S0&!S1	0.0100	n/a	n/a	0.1130
I0(HL)	I1&I2&I3&!S0&S1	0.0100	n/a	n/a	0.2673
I0(HL)	I1&I2&I3&S0&!S1	0.0100	n/a	n/a	0.1130
I0(HL)	I1&I2&I3&S0&S1	0.0100	n/a	n/a	0.1130
S1(HL)	!I0&!I1&!I2&!I3&!S0	0.0100	n/a	n/a	0.1899
S1(HL)	!I0&!I1&!I2&!I3&S0	0.0100	n/a	n/a	0.1901
S1(HL)	!I0&!I1&!I2&I3&!S0	0.0100	n/a	n/a	0.1899
S1(HL)	!I0&!I1&I2&!I3&S0	0.0100	n/a	n/a	0.1901
S1(HL)	!I0&I1&!I2&!I3&!S0	0.0100	n/a	n/a	0.1899
S1(HL)	!I0&I1&!I2&I3&!S0	0.0100	n/a	n/a	0.1899
S1(HL)	I0&!I1&!I2&!I3&S0	0.0100	n/a	n/a	0.1901
S1(HL)	I0&!I1&I2&!I3&S0	0.0100	n/a	n/a	0.1901
S1(HL)	!I0&I1&!I2&I3&S0	0.0100	n/a	n/a	0.1845
S1(HL)	!I0&I1&I2&I3&S0	0.0100	n/a	n/a	0.1845
S1(HL)	I0&!I1&I2&!I3&!S0	0.0100	n/a	n/a	0.1846
S1(HL)	I0&!I1&I2&I3&!S0	0.0100	n/a	n/a	0.1846
S1(HL)	I0&I1&!I2&I3&S0	0.0100	n/a	n/a	0.1845
S1(HL)	I0&I1&I2&!I3&!S0	0.0100	n/a	n/a	0.1845
S1(HL)	I0&I1&I2&I3&!S0	0.0100	n/a	n/a	0.1845
S1(HL)	I0&I1&I2&I3&S0	0.0100	n/a	n/a	0.1845
I0(LH)	!I1&!I2&!I3&!S0&S1	0.0100	n/a	n/a	0.0913
I0(LH)	!I1&!I2&!I3&S0&!S1	0.0100	n/a	n/a	0.0019
I0(LH)	!I1&!I2&!I3&S0&S1	0.0100	n/a	n/a	0.0019
I0(LH)	!I1&!I2&I3&!S0&S1	0.0100	n/a	n/a	0.0913
I0(LH)	!I1&!I2&I3&S0&!S1	0.0100	n/a	n/a	0.0019
I0(LH)	!I1&I2&!I3&S0&!S1	0.0100	n/a	n/a	0.0019
I0(LH)	!I1&I2&!I3&S0&S1	0.0100	n/a	n/a	0.0019
I0(LH)	!I1&I2&I3&S0&!S1	0.0100	n/a	n/a	0.0019
I0(LH)	I1&!I2&!I3&!S0&S1	0.0100	n/a	n/a	0.0913
I0(LH)	I1&!I2&!I3&S0&S1	0.0100	n/a	n/a	0.0019
I0(LH)	I1&!I2&I3&!S0&S1	0.0100	n/a	n/a	0.0913
I0(LH)	I1&I2&!I3&S0&S1	0.0100	n/a	n/a	0.0019
I0(LH)	!I1&!I2&I3&S0&S1	0.0100	n/a	n/a	0.0019
I0(LH)	!I1&I2&!I3&!S0&S1	0.0100	n/a	n/a	0.0913
I0(LH)	!I1&I2&I3&!S0&S1	0.0100	n/a	n/a	0.0913
I0(LH)	!I1&I2&I3&S0&S1	0.0100	n/a	n/a	0.0019
I0(LH)	I1&!I2&!I3&S0&!S1	0.0100	n/a	n/a	0.0019
I0(LH)	I1&!I2&I3&S0&!S1	0.0100	n/a	n/a	0.0019
I0(LH)	I1&!I2&I3&S0&S1	0.0100	n/a	n/a	0.0019
I0(LH)	I1&I2&!I3&!S0&S1	0.0100	n/a	n/a	0.0913
I0(LH)	I1&I2&!I3&S0&!S1	0.0100	n/a	n/a	0.0019
I0(LH)	I1&I2&I3&!S0&S1	0.0100	n/a	n/a	0.0913
I0(LH)	I1&I2&I3&S0&!S1	0.0100	n/a	n/a	0.0019
I0(LH)	I1&I2&I3&S0&S1	0.0100	n/a	n/a	0.0019
S0(LH)	!I0&!I1&!I2&!I3&!S1	0.0100	n/a	n/a	-0.0013
S0(LH)	!I0&!I1&!I2&!I3&S1	0.0100	n/a	n/a	-0.0014
S0(LH)	!I0&!I1&!I2&I3&!S1	0.0100	n/a	n/a	0.0457
S0(LH)	!I0&!I1&I2&!I3&!S1	0.0100	n/a	n/a	0.2594
S0(LH)	!I0&!I1&I2&I3&!S1	0.0100	n/a	n/a	-0.0014
S0(LH)	!I0&I1&!I2&!I3&S1	0.0100	n/a	n/a	0.0407
S0(LH)	I0&!I1&!I2&!I3&S1	0.0100	n/a	n/a	0.2451
S0(LH)	I0&I1&!I2&!I3&S1	0.0100	n/a	n/a	-0.0013

continues on next page

Table 215 – continued from previous page

S0(LH)	!I0&!I1&I2&I3&S1	0.0100	n/a	n/a	-0.0014
S0(LH)	!I0&I1&I2&I3&S1	0.0100	n/a	n/a	0.0405
S0(LH)	I0&!I1&I2&I3&S1	0.0100	n/a	n/a	0.2453
S0(LH)	I0&I1&!I2&!I3&!S1	0.0100	n/a	n/a	-0.0014
S0(LH)	I0&I1&!I2&I3&!S1	0.0100	n/a	n/a	0.0457
S0(LH)	I0&I1&I2&!I3&!S1	0.0100	n/a	n/a	0.2595
S0(LH)	I0&I1&I2&I3&!S1	0.0100	n/a	n/a	-0.0014
S0(LH)	I0&I1&I2&I3&S1	0.0100	n/a	n/a	-0.0014
I2(HL)	!I0&!I1&!I3&!S0&!S1	0.0100	n/a	n/a	0.2873
I2(HL)	!I0&!I1&!I3&S0&!S1	0.0100	n/a	n/a	0.1245
I2(HL)	!I0&!I1&!I3&S0&S1	0.0100	n/a	n/a	0.1245
I2(HL)	!I0&!I1&I3&!S0&!S1	0.0100	n/a	n/a	0.2873
I2(HL)	!I0&!I1&I3&S0&!S1	0.0100	n/a	n/a	0.1246
I2(HL)	!I0&I1&!I3&!S0&!S1	0.0100	n/a	n/a	0.2873
I2(HL)	!I0&I1&!I3&S0&S1	0.0100	n/a	n/a	0.1245
I2(HL)	!I0&I1&I3&!S0&!S1	0.0100	n/a	n/a	0.2873
I2(HL)	I0&!I1&!I3&S0&!S1	0.0100	n/a	n/a	0.1245
I2(HL)	I0&!I1&!I3&S0&S1	0.0100	n/a	n/a	0.1245
I2(HL)	I0&!I1&I3&S0&!S1	0.0100	n/a	n/a	0.1246
I2(HL)	I0&I1&!I3&S0&S1	0.0100	n/a	n/a	0.1245
I2(HL)	!I0&!I1&I3&S0&S1	0.0100	n/a	n/a	0.1245
I2(HL)	!I0&I1&!I3&S0&!S1	0.0100	n/a	n/a	0.1246
I2(HL)	!I0&I1&I3&S0&!S1	0.0100	n/a	n/a	0.1245
I2(HL)	!I0&I1&I3&S0&S1	0.0100	n/a	n/a	0.1245
I2(HL)	I0&!I1&!I3&!S0&!S1	0.0100	n/a	n/a	0.2873
I2(HL)	I0&!I1&I3&!S0&!S1	0.0100	n/a	n/a	0.2873
I2(HL)	I0&!I1&I3&S0&S1	0.0100	n/a	n/a	0.1245
I2(HL)	I0&I1&!I3&!S0&!S1	0.0100	n/a	n/a	0.2873
I2(HL)	I0&I1&!I3&S0&!S1	0.0100	n/a	n/a	0.1246
I2(HL)	I0&I1&I3&!S0&!S1	0.0100	n/a	n/a	0.2873
I2(HL)	I0&I1&I3&S0&!S1	0.0100	n/a	n/a	0.1245
I2(HL)	I0&I1&I3&S0&S1	0.0100	n/a	n/a	0.1245
S1(LH)	!I0&!I1&!I2&!I3&!S0	0.0100	n/a	n/a	-0.0016
S1(LH)	!I0&!I1&!I2&!I3&S0	0.0100	n/a	n/a	-0.0016
S1(LH)	!I0&!I1&!I2&I3&!S0	0.0100	n/a	n/a	-0.0016
S1(LH)	!I0&!I1&I2&!I3&S0	0.0100	n/a	n/a	-0.0016
S1(LH)	!I0&I1&!I2&!I3&!S0	0.0100	n/a	n/a	-0.0016
S1(LH)	!I0&I1&!I2&I3&!S0	0.0100	n/a	n/a	-0.0016
S1(LH)	I0&!I1&!I2&!I3&S0	0.0100	n/a	n/a	-0.0016
S1(LH)	I0&!I1&I2&!I3&S0	0.0100	n/a	n/a	-0.0016
S1(LH)	!I0&I1&!I2&I3&S0	0.0100	n/a	n/a	-0.0017
S1(LH)	!I0&I1&I2&I3&S0	0.0100	n/a	n/a	-0.0017
S1(LH)	I0&!I1&I2&!I3&!S0	0.0100	n/a	n/a	-0.0017
S1(LH)	I0&!I1&I2&I3&!S0	0.0100	n/a	n/a	-0.0017
S1(LH)	I0&I1&!I2&I3&S0	0.0100	n/a	n/a	-0.0017
S1(LH)	I0&I1&I2&!I3&!S0	0.0100	n/a	n/a	-0.0017
S1(LH)	I0&I1&I2&I3&!S0	0.0100	n/a	n/a	-0.0017
S1(LH)	I0&I1&I2&I3&S0	0.0100	n/a	n/a	-0.0017

LEAKAGE POWER

When Condition	Power (nW)
!I0&!I1&!I2&!I3&!S0&!S1	0.6088
!I0&!I1&!I2&!I3&!S0&S1	0.6099
!I0&!I1&!I2&!I3&S0&!S1	0.6099
!I0&!I1&!I2&!I3&S0&S1	0.6109
!I0&!I1&!I2&I3&!S0&!S1	0.6119
!I0&!I1&!I2&I3&!S0&S1	0.6129
!I0&!I1&!I2&I3&S0&!S1	0.6149
!I0&!I1&I2&!I3&!S0&!S1	0.6138
!I0&!I1&I2&!I3&S0&!S1	0.6129
!I0&!I1&I2&!I3&S0&S1	0.6140
!I0&!I1&I2&I3&!S0&!S1	0.6160
!I0&!I1&I2&I3&S0&!S1	0.6171
!I0&I1&!I2&!I3&!S0&!S1	0.6119
!I0&I1&!I2&!I3&!S0&S1	0.6129
!I0&I1&!I2&!I3&S0&S1	0.6160
!I0&I1&!I2&I3&!S0&!S1	0.6149
!I0&I1&!I2&I3&!S0&S1	0.6160
!I0&I1&I2&!I3&!S0&!S1	0.6169
!I0&I1&I2&!I3&S0&S1	0.6190
!I0&I1&I2&I3&!S0&!S1	0.6190
I0&!I1&!I2&!I3&!S0&S1	0.6149
I0&!I1&!I2&!I3&S0&!S1	0.6129
I0&!I1&!I2&!I3&S0&S1	0.6140
I0&!I1&!I2&I3&!S0&S1	0.6179
I0&!I1&!I2&I3&S0&!S1	0.6179
I0&!I1&I2&!I3&S0&!S1	0.6160
I0&!I1&I2&!I3&S0&S1	0.6171
I0&!I1&I2&I3&S0&!S1	0.6201
I0&I1&!I2&!I3&!S0&S1	0.6171
I0&I1&!I2&!I3&S0&S1	0.6181
I0&I1&!I2&I3&!S0&S1	0.6201
I0&I1&I2&!I3&S0&S1	0.6212
!I0&!I1&!I2&I3&S0&S1	0.6116
!I0&!I1&I2&!I3&!S0&S1	0.6106
!I0&!I1&I2&I3&!S0&S1	0.6127
!I0&!I1&I2&I3&S0&S1	0.6138
!I0&I1&!I2&!I3&S0&!S1	0.6106
!I0&I1&!I2&I3&S0&!S1	0.6147
!I0&I1&!I2&I3&S0&S1	0.6158
!I0&I1&I2&!I3&!S0&S1	0.6137
!I0&I1&I2&!I3&S0&!S1	0.6137
!I0&I1&I2&I3&!S0&S1	0.6158
!I0&I1&I2&I3&S0&!S1	0.6169
!I0&I1&I2&I3&S0&S1	0.6179
I0&!I1&!I2&!I3&!S0&!S1	0.6095
I0&!I1&!I2&I3&!S0&!S1	0.6125
I0&!I1&!I2&I3&S0&S1	0.6147
I0&!I1&I2&!I3&!S0&!S1	0.6137
I0&!I1&I2&!I3&!S0&S1	0.6147
I0&!I1&I2&I3&!S0&!S1	0.6158
I0&!I1&I2&I3&!S0&S1	0.6169

continues on next page

Table 216 – continued from previous page

I0&!I1&I2&I3&S0&S1	0.6169
I0&I1&!I2&!I3&!S0&!S1	0.6116
I0&I1&!I2&!I3&S0&!S1	0.6127
I0&I1&!I2&I3&!S0&!S1	0.6147
I0&I1&!I2&I3&S0&!S1	0.6169
I0&I1&!I2&I3&S0&S1	0.6179
I0&I1&I2&!I3&!S0&!S1	0.6158
I0&I1&I2&!I3&!S0&S1	0.6169
I0&I1&I2&!I3&S0&!S1	0.6158
I0&I1&I2&I3&!S0&!S1	0.6179
I0&I1&I2&I3&!S0&S1	0.6190
I0&I1&I2&I3&S0&!S1	0.6190
I0&I1&I2&I3&S0&S1	0.6201

gf180mcu_fd_sc_mcu9t5v0__nand2_1

gf180mcu_fd_sc_mcu9t5v0__nand2_1 symbol

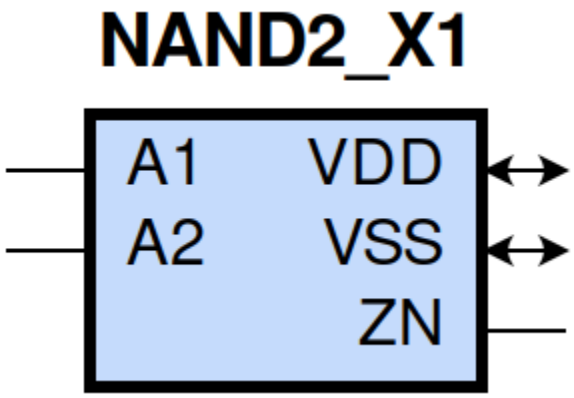

gf180mcu_fd_sc_mcu9t5v0__nand2_1 schematic

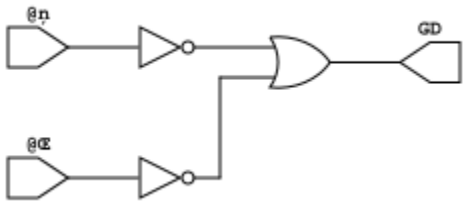

gf180mcu_fd_sc_mcu9t5v0__nand2_1 layout

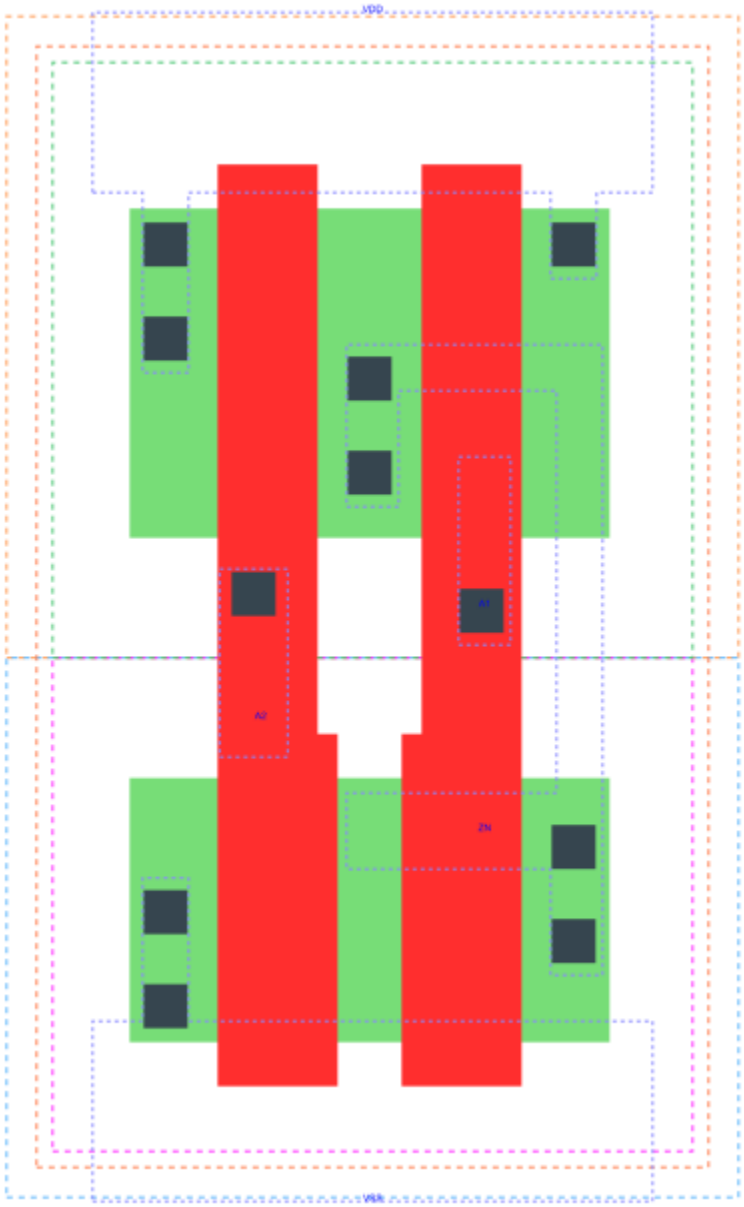

NAND2_X1 is a 2-input NAND with 1X drive strength

Attributes

Attribute	Value
area	14.112000 μm^2

OUTPUT FUNCTIONS

Output Pin	Function
ZN	((!A1)|(!A2))

TRUTH TABLE FOR ZN

A1	A2	ZN
0	?	1
?	0	1
1	1	0

FUNCTIONAL SCHEMATIC

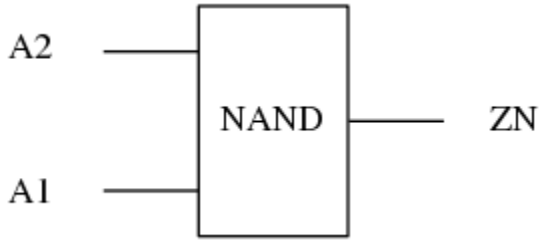

PIN CAPACITANCE (pf)

Pin	Type	Capacitance (pf)
A2	input	0.0065
A1	input	0.0066

DELAY AND OUTPUT TRANSITION TIME corresponding to min slew and load

Input Pin	Output	When Condition	Tin (ns)	Out Load (pf)	Delay (ns)	Tout (ns)
A2(HL)	ZN(LH)	A1	0.0100	0.0010	0.0767	0.0527
A2(LH)	ZN(HL)	A1	0.0100	0.0010	0.0613	0.0279
A1(HL)	ZN(LH)	A2	0.0100	0.0010	0.0567	0.0350
A1(LH)	ZN(HL)	A2	0.0100	0.0010	0.0499	0.0280

DYNAMIC ENERGY

Input Pin	When Condition	Tin (ns)	Output	Out Load (pf)	Energy (uW/MHz)
A1	A2	0.0100	ZN(LH)	0.0010	0.1526
A2	A1	0.0100	ZN(LH)	0.0010	0.2117
A1	A2	0.0100	ZN(HL)	0.0010	0.0012
A2	A1	0.0100	ZN(HL)	0.0010	0.0011
A2(LH)	!A1	0.0100	n/a	n/a	-0.0539
A1(LH)	!A2	0.0100	n/a	n/a	-0.0386
A2(HL)	!A1	0.0100	n/a	n/a	0.0605
A1(HL)	!A2	0.0100	n/a	n/a	0.0616

LEAKAGE POWER

When Condition	Power (nW)
!A1&!A2	0.0753
!A1&A2	0.0756
A1&!A2	0.1154
A1&A2	0.1035

gf180mcu_fd_sc_mcu9t5v0__nand2_2

gf180mcu_fd_sc_mcu9t5v0__nand2_2 symbol

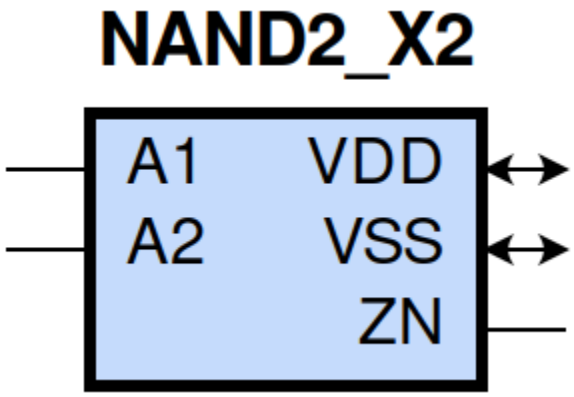

gf180mcu_fd_sc_mcu9t5v0__nand2_2 schematic

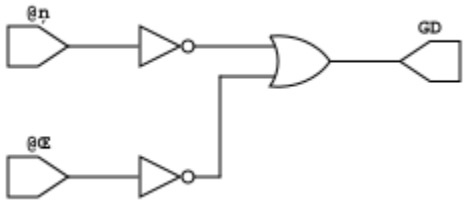

gf180mcu_fd_sc_mcu9t5v0__nand2_2 layout

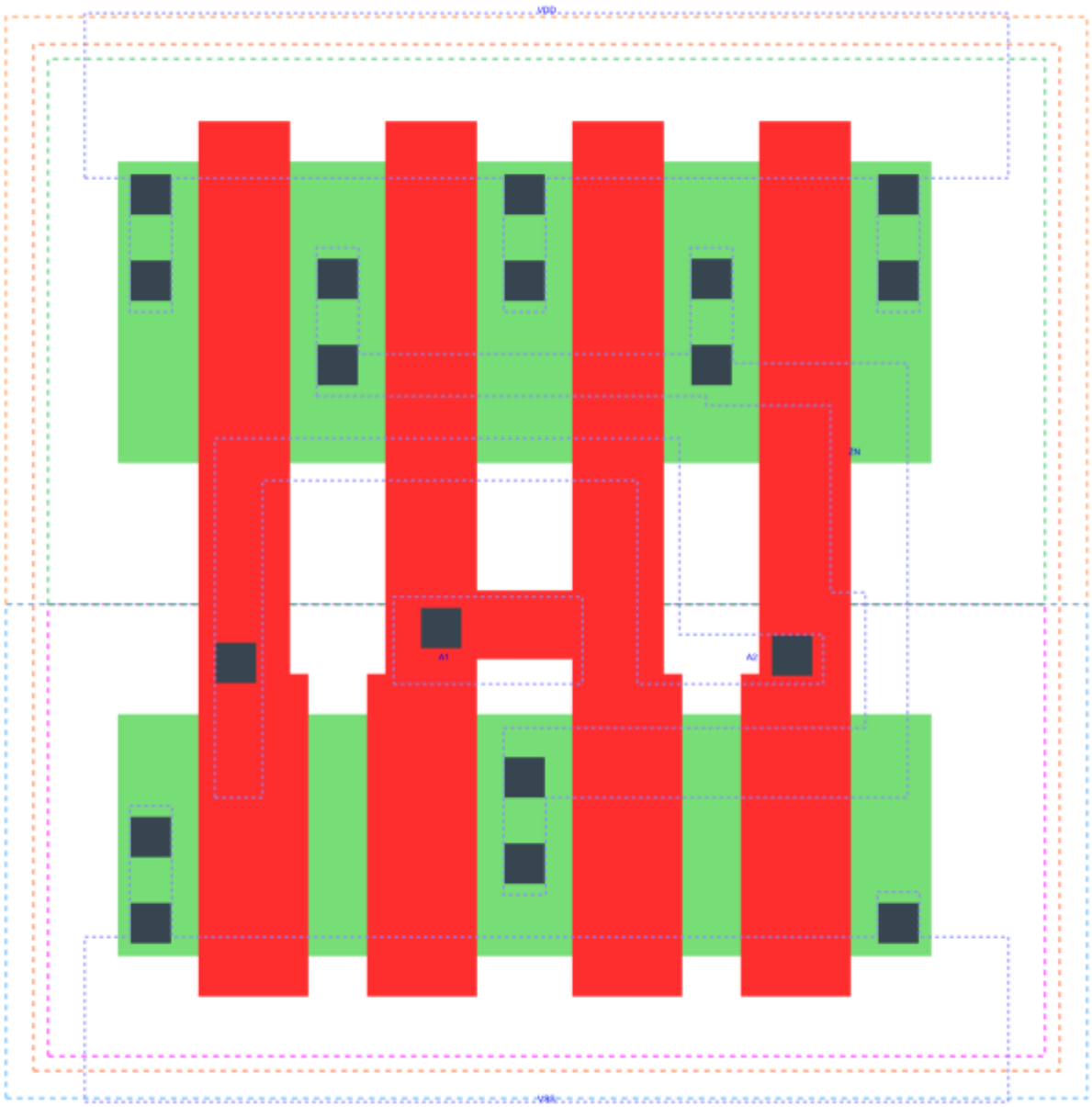

NAND2_X2 is a 2-input NAND with 2X drive strength

Attributes

Attribute	Value
area	25.401600 μm^2

OUTPUT FUNCTIONS

Output Pin	Function
ZN	((!A1)|(!A2))

TRUTH TABLE FOR ZN

A1	A2	ZN
0	?	1
?	0	1
1	1	0

FUNCTIONAL SCHEMATIC

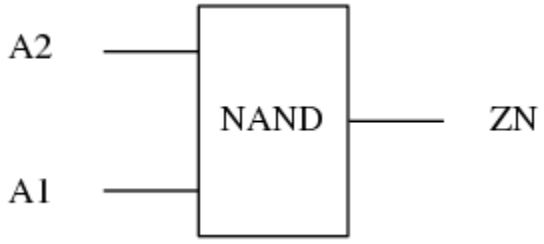

PIN CAPACITANCE (pf)

Pin	Type	Capacitance (pf)
A2	input	0.0137
A1	input	0.0130

DELAY AND OUTPUT TRANSITION TIME corresponding to min slew and load

Input Pin	Output	When Condition	Tin (ns)	Out Load (pf)	Delay (ns)	Tout (ns)
A2(HL)	ZN(LH)	A1	0.0100	0.0010	0.0688	0.0461
A2(LH)	ZN(HL)	A1	0.0100	0.0010	0.0552	0.0229
A1(HL)	ZN(LH)	A2	0.0100	0.0010	0.0484	0.0286
A1(LH)	ZN(HL)	A2	0.0100	0.0010	0.0439	0.0228

DYNAMIC ENERGY

Input Pin	When Condition	Tin (ns)	Output	Out Load (pf)	Energy (uW/MHz)
A1	A2	0.0100	ZN(LH)	0.0010	0.2735
A2	A1	0.0100	ZN(LH)	0.0010	0.3939
A1	A2	0.0100	ZN(HL)	0.0010	0.0010
A2	A1	0.0100	ZN(HL)	0.0010	0.0010
A2(LH)	!A1	0.0100	n/a	n/a	-0.1075
A1(LH)	!A2	0.0100	n/a	n/a	-0.0773
A2(HL)	!A1	0.0100	n/a	n/a	0.1211
A1(HL)	!A2	0.0100	n/a	n/a	0.1229

LEAKAGE POWER

When Condition	Power (nW)
!A1&!A2	0.1005
!A1&A2	0.1012
A1&!A2	0.1807
A1&A2	0.1570

gf180mcu_fd_sc_mcu9t5v0__nand2_4

gf180mcu_fd_sc_mcu9t5v0__nand2_4 symbol

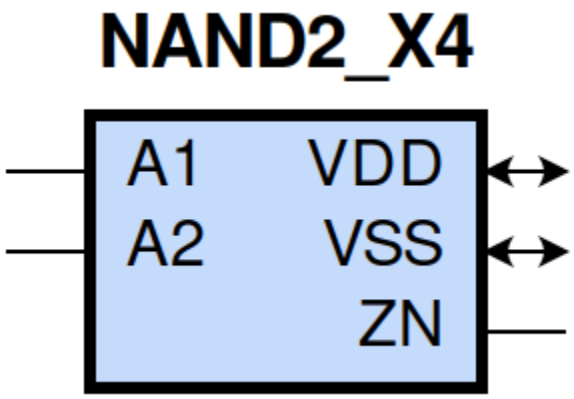

gf180mcu_fd_sc_mcu9t5v0__nand2_4 schematic

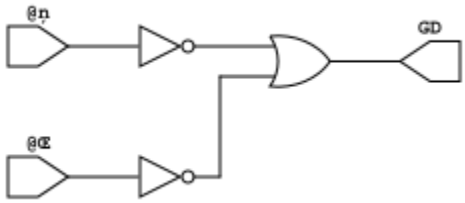

gf180mcu_fd_sc_mcu9t5v0__nand2_4 layout

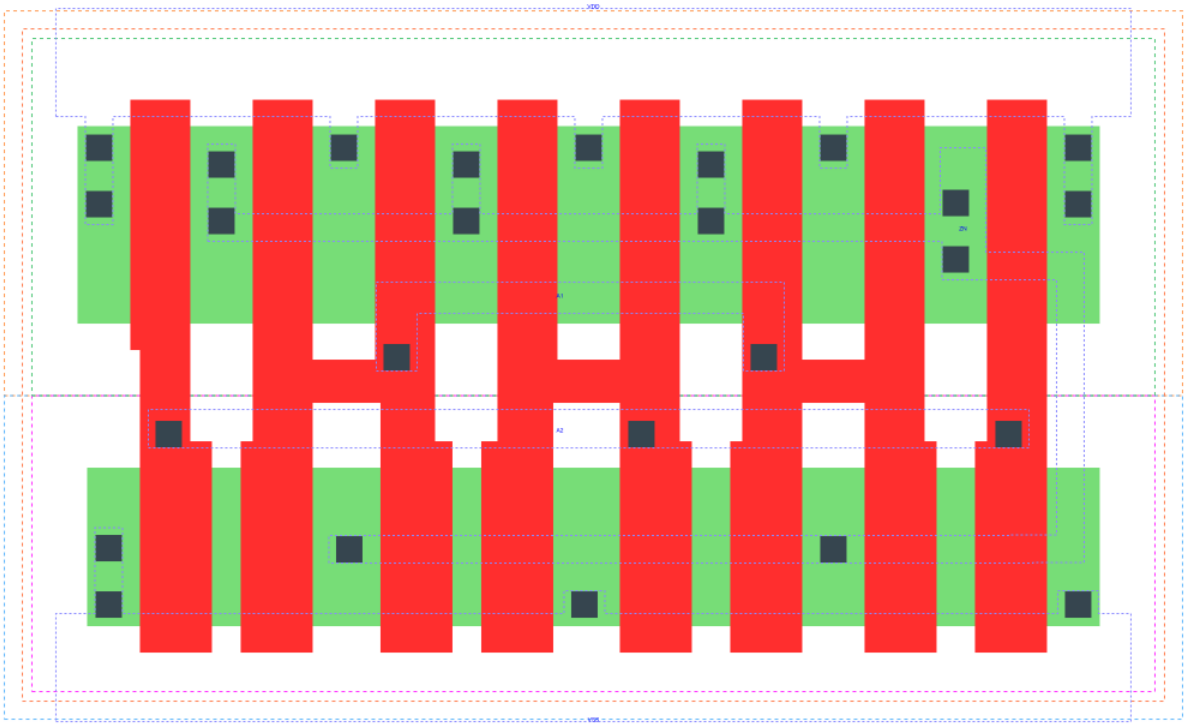

NAND2_X4 is a 2-input NAND with 4X drive strength

Attributes

Attribute	Value
area	45.158400 μm^2

OUTPUT FUNCTIONS

Output Pin	Function
ZN	((!A1)|(!A2))

TRUTH TABLE FOR ZN

A1	A2	ZN
0	?	1
?	0	1
1	1	0

FUNCTIONAL SCHEMATIC

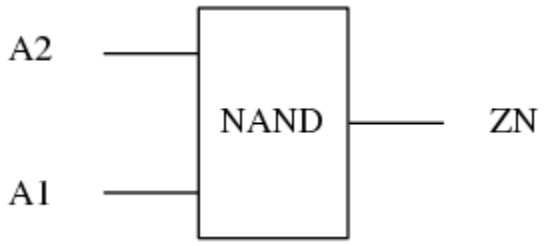

PIN CAPACITANCE (pf)

Pin	Type	Capacitance (pf)
A2	input	0.0263
A1	input	0.0259

DELAY AND OUTPUT TRANSITION TIME corresponding to min slew and load

Input Pin	Output	When Condition	Tin (ns)	Out Load (pf)	Delay (ns)	Tout (ns)
A2(HL)	ZN(LH)	A1	0.0100	0.0010	0.0661	0.0439
A2(LH)	ZN(HL)	A1	0.0100	0.0010	0.0532	0.0213
A1(HL)	ZN(LH)	A2	0.0100	0.0010	0.0459	0.0265
A1(LH)	ZN(HL)	A2	0.0100	0.0010	0.0421	0.0212

DYNAMIC ENERGY

Input Pin	When Condition	Tin (ns)	Output	Out Load (pf)	Energy (uW/MHz)
A1	A2	0.0100	ZN(LH)	0.0010	0.5361
A2	A1	0.0100	ZN(LH)	0.0010	0.7759
A1	A2	0.0100	ZN(HL)	0.0010	0.0013
A2	A1	0.0100	ZN(HL)	0.0010	0.0011
A2(LH)	!A1	0.0100	n/a	n/a	-0.2145
A1(LH)	!A2	0.0100	n/a	n/a	-0.1574
A2(HL)	!A1	0.0100	n/a	n/a	0.2417
A1(HL)	!A2	0.0100	n/a	n/a	0.2450

LEAKAGE POWER

When Condition	Power (nW)
!A1&!A2	0.1510
!A1&A2	0.1523
A1&!A2	0.3114
A1&A2	0.2640

gf180mcu_fd_sc_mcu9t5v0__nand3_1

gf180mcu_fd_sc_mcu9t5v0__nand3_1 symbol

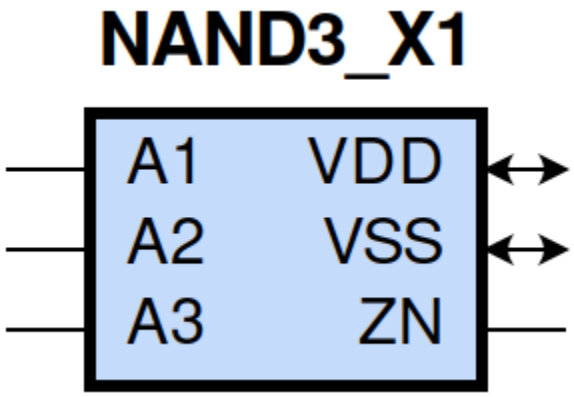

gf180mcu_fd_sc_mcu9t5v0__nand3_1 schematic

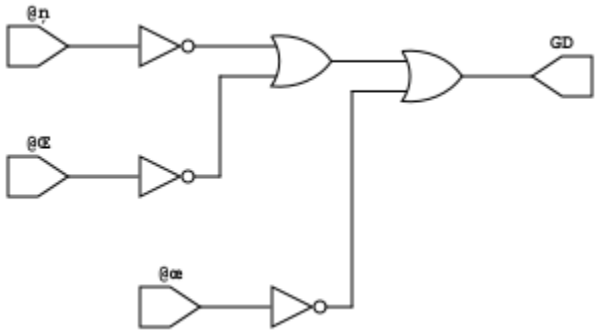

gf180mcu_fd_sc_mcu9t5v0__nand3_1 layout

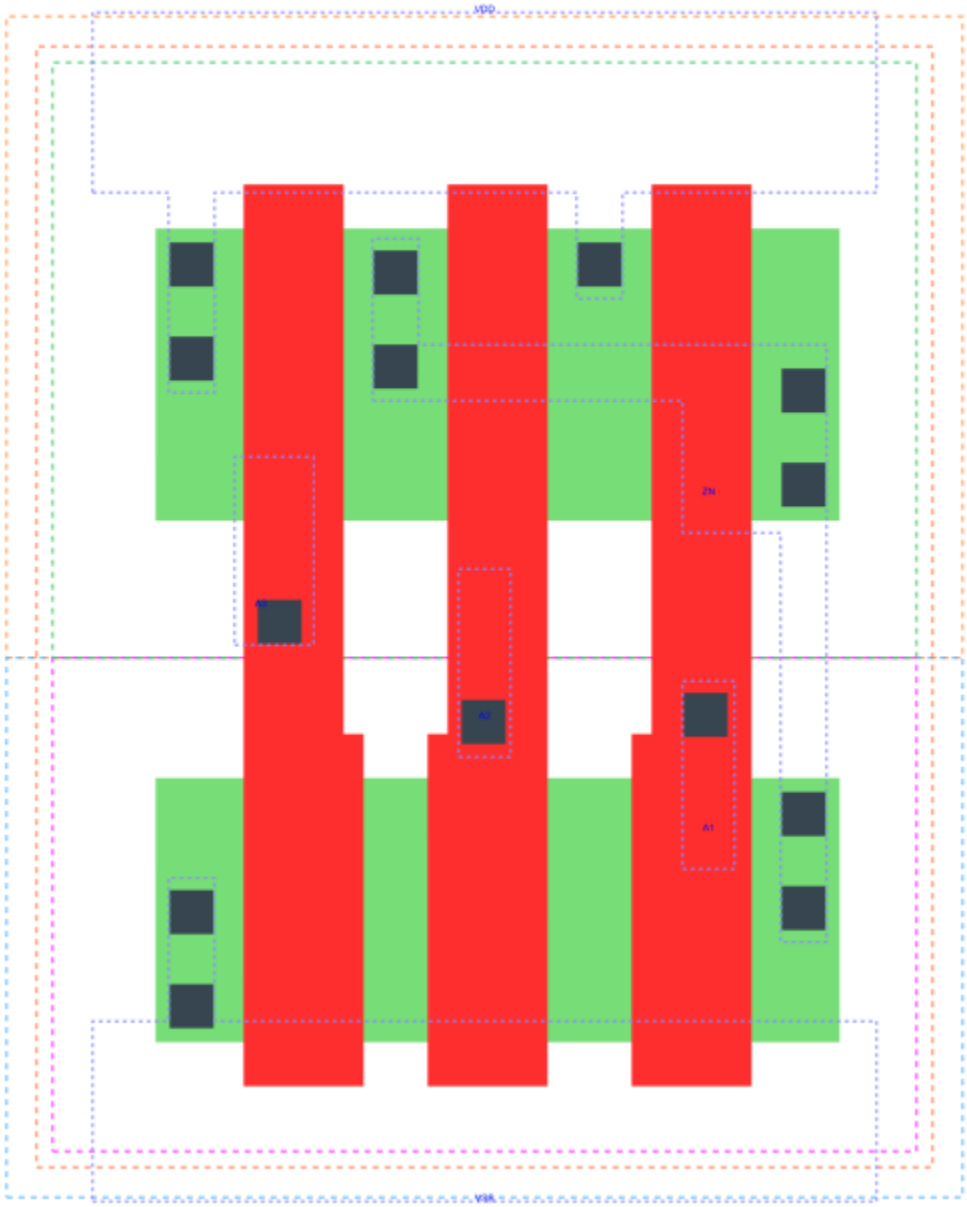

NAND3_X1 is a 3-input NAND with 1X drive strength

Attributes

Attribute	Value
area	19.756800 μm^2

OUTPUT FUNCTIONS

Output Pin	Function
ZN	((!A1)|(!A2)|(!A3))

TRUTH TABLE FOR ZN

A1	A2	A3	ZN
0	?	?	1
?	0	?	1
?	?	0	1
1	1	1	0

FUNCTIONAL SCHEMATIC

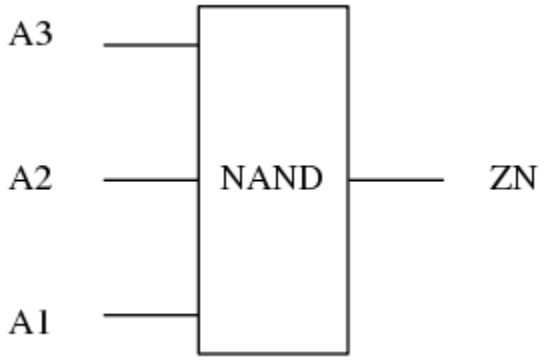

PIN CAPACITANCE (pf)

Pin	Type	Capacitance (pf)
A3	input	0.0061
A2	input	0.0060
A1	input	0.0063

DELAY AND OUTPUT TRANSITION TIME corresponding to min slew and load

Input Pin	Output	When Condition	Tin (ns)	Out Load (pf)	Delay (ns)	Tout (ns)
A3(LH)	ZN(HL)	A1&A2	0.0100	0.0010	0.1001	0.0478
A3(HL)	ZN(LH)	A1&A2	0.0100	0.0010	0.1167	0.0857
A2(HL)	ZN(LH)	A1&A3	0.0100	0.0010	0.0993	0.0680
A2(LH)	ZN(HL)	A1&A3	0.0100	0.0010	0.0895	0.0478
A1(HL)	ZN(LH)	A2&A3	0.0100	0.0010	0.0730	0.0473
A1(LH)	ZN(HL)	A2&A3	0.0100	0.0010	0.0688	0.0476

DYNAMIC ENERGY

Input Pin	When Condition	Tin (ns)	Output	Out Load (pf)	Energy (uW/MHz)
A1	A2&A3	0.0100	ZN(LH)	0.0010	0.1579
A2	A1&A3	0.0100	ZN(LH)	0.0010	0.2233
A3	A1&A2	0.0100	ZN(HL)	0.0010	0.0271
A1	A2&A3	0.0100	ZN(HL)	0.0010	0.0271
A2	A1&A3	0.0100	ZN(HL)	0.0010	0.0271
A3	A1&A2	0.0100	ZN(LH)	0.0010	0.2796
A3(LH)	!A1&!A2	0.0100	n/a	n/a	-0.0478
A3(LH)	!A1&A2	0.0100	n/a	n/a	-0.0476
A3(LH)	A1&!A2	0.0100	n/a	n/a	-0.0477
A2(LH)	!A1&!A3	0.0100	n/a	n/a	-0.0478
A2(LH)	!A1&A3	0.0100	n/a	n/a	-0.0475
A2(LH)	A1&!A3	0.0100	n/a	n/a	-0.0359
A1(LH)	!A2&!A3	0.0100	n/a	n/a	-0.0303
A1(LH)	!A2&A3	0.0100	n/a	n/a	-0.0303
A1(LH)	A2&!A3	0.0100	n/a	n/a	0.0329
A3(HL)	!A1&!A2	0.0100	n/a	n/a	0.0477
A3(HL)	!A1&A2	0.0100	n/a	n/a	0.0534
A3(HL)	A1&!A2	0.0100	n/a	n/a	0.0519
A2(HL)	!A1&!A3	0.0100	n/a	n/a	0.0676
A2(HL)	!A1&A3	0.0100	n/a	n/a	0.0588
A2(HL)	A1&!A3	0.0100	n/a	n/a	0.0541
A1(HL)	!A2&!A3	0.0100	n/a	n/a	0.0555
A1(HL)	!A2&A3	0.0100	n/a	n/a	0.0553
A1(HL)	A2&!A3	0.0100	n/a	n/a	0.0548

LEAKAGE POWER

When Condition	Power (nW)
!A1&!A2&!A3	0.0753
!A1&!A2&A3	0.0753
!A1&A2&!A3	0.0753
!A1&A2&A3	0.0756
A1&!A2&!A3	0.1151
A1&!A2&A3	0.1153
A1&A2&!A3	0.1544
A1&A2&A3	0.1299

gf180mcu_fd_sc_mcu9t5v0__nand3_2

gf180mcu_fd_sc_mcu9t5v0__nand3_2 symbol

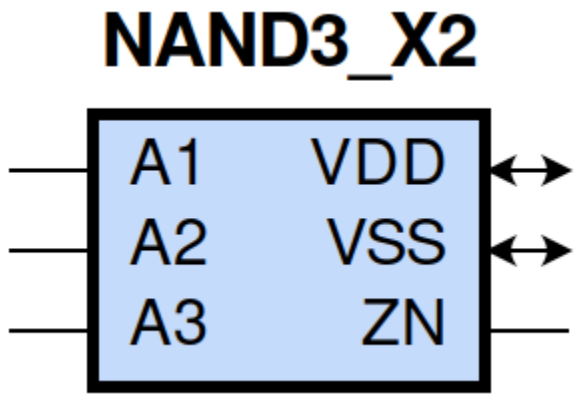

gf180mcu_fd_sc_mcu9t5v0__nand3_2 schematic

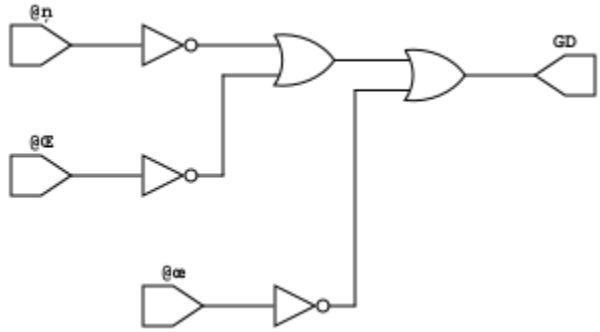

gf180mcu_fd_sc_mcu9t5v0__nand3_2 layout

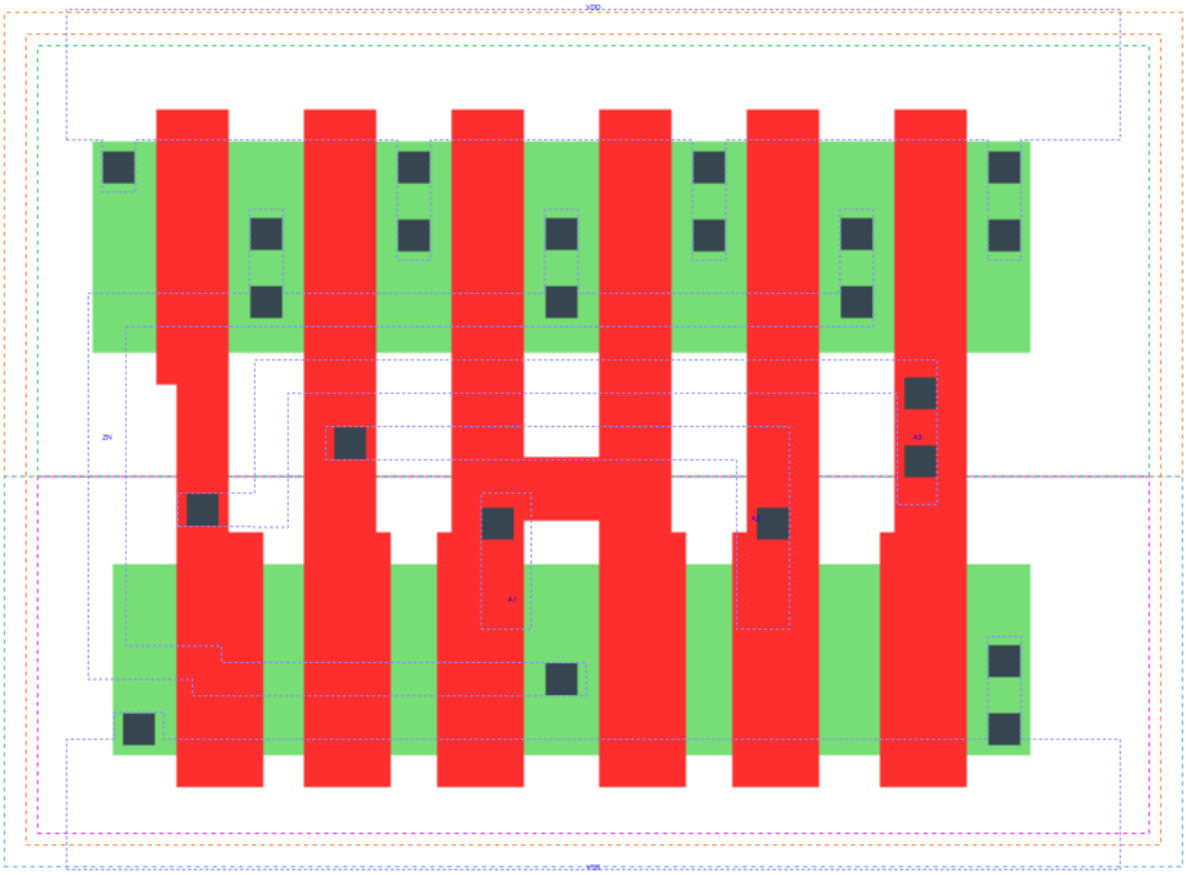

NAND3_X2 is a 3-input NAND with 2X drive strength

Attributes

Attribute	Value
area	36.691200 μm^2

OUTPUT FUNCTIONS

Output Pin	Function
ZN	((!A1)|(!A2)|(!A3))

TRUTH TABLE FOR ZN

A1	A2	A3	ZN
0	?	?	1
?	0	?	1
?	?	0	1
1	1	1	0

FUNCTIONAL SCHEMATIC

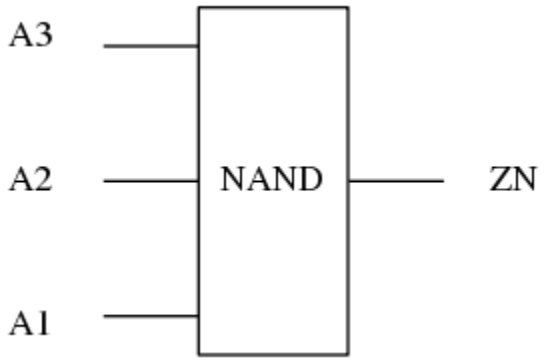

PIN CAPACITANCE (pf)

Pin	Type	Capacitance (pf)
A3	input	0.0134
A2	input	0.0129
A1	input	0.0123

DELAY AND OUTPUT TRANSITION TIME corresponding to min slew and load

Input Pin	Output	When Condition	Tin (ns)	Out Load (pf)	Delay (ns)	Tout (ns)
A3(LH)	ZN(HL)	A1&A2	0.0100	0.0010	0.0905	0.0400
A3(HL)	ZN(LH)	A1&A2	0.0100	0.0010	0.1059	0.0767
A2(HL)	ZN(LH)	A1&A3	0.0100	0.0010	0.0885	0.0589
A2(LH)	ZN(HL)	A1&A3	0.0100	0.0010	0.0797	0.0400
A1(HL)	ZN(LH)	A2&A3	0.0100	0.0010	0.0628	0.0389
A1(LH)	ZN(HL)	A2&A3	0.0100	0.0010	0.0598	0.0396

DYNAMIC ENERGY

Input Pin	When Condition	Tin (ns)	Output	Out Load (pf)	Energy (uW/MHz)
A1	A2&A3	0.0100	ZN(LH)	0.0010	0.2967
A2	A1&A3	0.0100	ZN(LH)	0.0010	0.4253
A3	A1&A2	0.0100	ZN(HL)	0.0010	0.0332
A1	A2&A3	0.0100	ZN(HL)	0.0010	0.0330
A2	A1&A3	0.0100	ZN(HL)	0.0010	0.0332
A3	A1&A2	0.0100	ZN(LH)	0.0010	0.5395
A3(LH)	!A1&!A2	0.0100	n/a	n/a	-0.0952
A3(LH)	!A1&A2	0.0100	n/a	n/a	-0.0949
A3(LH)	A1&!A2	0.0100	n/a	n/a	-0.0952
A2(LH)	!A1&!A3	0.0100	n/a	n/a	-0.0955
A2(LH)	!A1&A3	0.0100	n/a	n/a	-0.0949
A2(LH)	A1&!A3	0.0100	n/a	n/a	-0.0702
A1(LH)	!A2&!A3	0.0100	n/a	n/a	-0.0647
A1(LH)	!A2&A3	0.0100	n/a	n/a	-0.0648
A1(LH)	A2&!A3	0.0100	n/a	n/a	0.0630
A3(HL)	!A1&!A2	0.0100	n/a	n/a	0.0954
A3(HL)	!A1&A2	0.0100	n/a	n/a	0.1068
A3(HL)	A1&!A2	0.0100	n/a	n/a	0.1038
A2(HL)	!A1&!A3	0.0100	n/a	n/a	0.1347
A2(HL)	!A1&A3	0.0100	n/a	n/a	0.1172
A2(HL)	A1&!A3	0.0100	n/a	n/a	0.1084
A1(HL)	!A2&!A3	0.0100	n/a	n/a	0.1107
A1(HL)	!A2&A3	0.0100	n/a	n/a	0.1105
A1(HL)	A2&!A3	0.0100	n/a	n/a	0.1094

LEAKAGE POWER

When Condition	Power (nW)
!A1&!A2&!A3	0.1005
!A1&!A2&A3	0.1005
!A1&A2&!A3	0.1007
!A1&A2&A3	0.1012
A1&!A2&!A3	0.1802
A1&!A2&A3	0.1807
A1&A2&!A3	0.2588
A1&A2&A3	0.2098

gf180mcu_fd_sc_mcu9t5v0__nand3_4

gf180mcu_fd_sc_mcu9t5v0__nand3_4 symbol

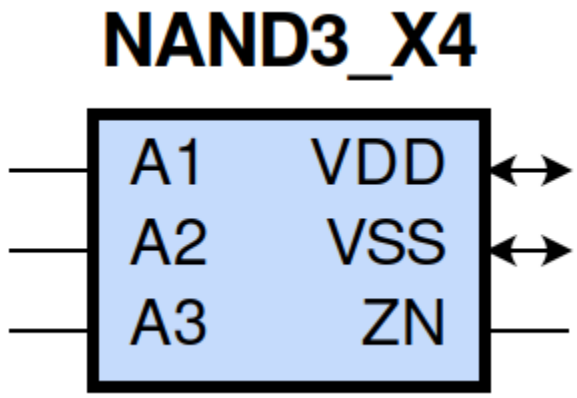

gf180mcu_fd_sc_mcu9t5v0__nand3_4 schematic

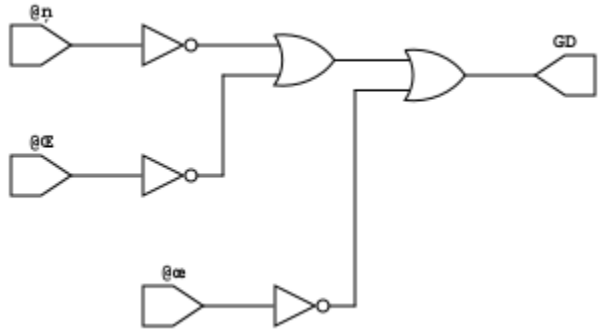

gf180mcu_fd_sc_mcu9t5v0__nand3_4 layout

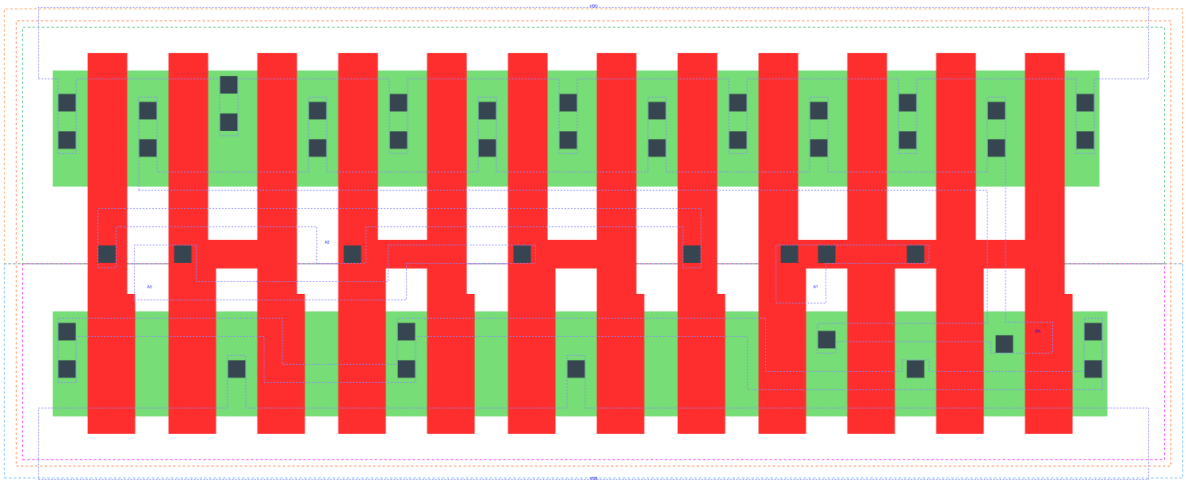

NAND3_X4 is a 3-input NAND with 4X drive strength

Attributes

Attribute	Value
area	70.560000 μm^2

OUTPUT FUNCTIONS

Output Pin	Function
ZN	((!A1)|(!A2)|(!A3))

TRUTH TABLE FOR ZN

A1	A2	A3	ZN
0	?	?	1
?	0	?	1
?	?	0	1
1	1	1	0

FUNCTIONAL SCHEMATIC

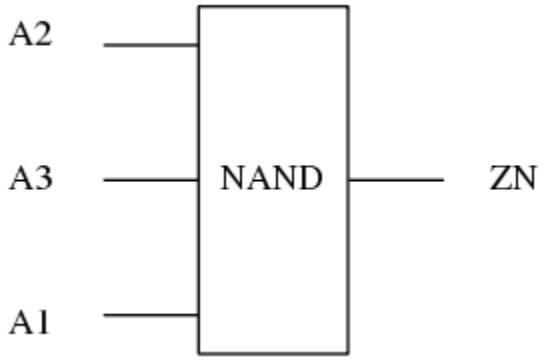

PIN CAPACITANCE (pf)

Pin	Type	Capacitance (pf)
A2	input	0.0260
A3	input	0.0250
A1	input	0.0244

DELAY AND OUTPUT TRANSITION TIME corresponding to min slew and load

Input Pin	Output	When Condition	Tin (ns)	Out Load (pf)	Delay (ns)	Tout (ns)
A2(HL)	ZN(LH)	A1&A3	0.0100	0.0010	0.0934	0.0626
A2(LH)	ZN(HL)	A1&A3	0.0100	0.0010	0.0830	0.0385
A3(LH)	ZN(HL)	A1&A2	0.0100	0.0010	0.0943	0.0385
A3(HL)	ZN(LH)	A1&A2	0.0100	0.0010	0.1099	0.0801
A1(HL)	ZN(LH)	A2&A3	0.0100	0.0010	0.0586	0.0359
A1(LH)	ZN(HL)	A2&A3	0.0100	0.0010	0.0543	0.0369

DYNAMIC ENERGY

Input Pin	When Condition	Tin (ns)	Output	Out Load (pf)	Energy (uW/MHz)
A1	A2&A3	0.0100	ZN(LH)	0.0010	0.5619
A2	A1&A3	0.0100	ZN(LH)	0.0010	0.9237
A3	A1&A2	0.0100	ZN(HL)	0.0010	0.0713
A1	A2&A3	0.0100	ZN(HL)	0.0010	0.0715
A2	A1&A3	0.0100	ZN(HL)	0.0010	0.0713
A3	A1&A2	0.0100	ZN(LH)	0.0010	1.1569
A3(LH)	!A1&!A2	0.0100	n/a	n/a	-0.1897
A3(LH)	!A1&A2	0.0100	n/a	n/a	-0.1893
A3(LH)	A1&!A2	0.0100	n/a	n/a	-0.1898
A2(LH)	!A1&!A3	0.0100	n/a	n/a	-0.1902
A2(LH)	!A1&A3	0.0100	n/a	n/a	-0.1892
A2(LH)	A1&!A3	0.0100	n/a	n/a	-0.1395
A1(LH)	!A2&!A3	0.0100	n/a	n/a	-0.0335
A1(LH)	!A2&A3	0.0100	n/a	n/a	-0.0335
A1(LH)	A2&!A3	0.0100	n/a	n/a	0.2278
A3(HL)	!A1&!A2	0.0100	n/a	n/a	0.1904
A3(HL)	!A1&A2	0.0100	n/a	n/a	0.2070
A3(HL)	A1&!A2	0.0100	n/a	n/a	0.2032
A2(HL)	!A1&!A3	0.0100	n/a	n/a	0.2787
A2(HL)	!A1&A3	0.0100	n/a	n/a	0.2370
A2(HL)	A1&!A3	0.0100	n/a	n/a	0.2118
A1(HL)	!A2&!A3	0.0100	n/a	n/a	0.2202
A1(HL)	!A2&A3	0.0100	n/a	n/a	0.2201
A1(HL)	A2&!A3	0.0100	n/a	n/a	0.2188

LEAKAGE POWER

When Condition	Power (nW)
!A1&!A2&!A3	0.1510
!A1&!A2&A3	0.1510
!A1&A2&!A3	0.1513
!A1&A2&A3	0.1523
A1&!A2&!A3	0.3106
A1&!A2&A3	0.3115
A1&A2&!A3	0.4677
A1&A2&A3	0.3696

gf180mcu_fd_sc_mcu9t5v0__nand4_1

gf180mcu_fd_sc_mcu9t5v0__nand4_1 symbol

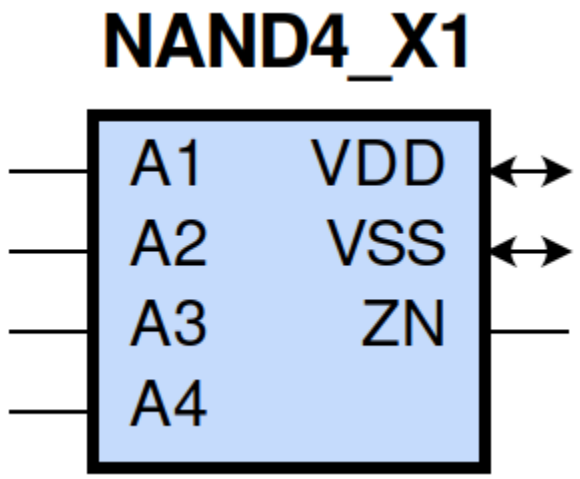

gf180mcu_fd_sc_mcu9t5v0__nand4_1 schematic

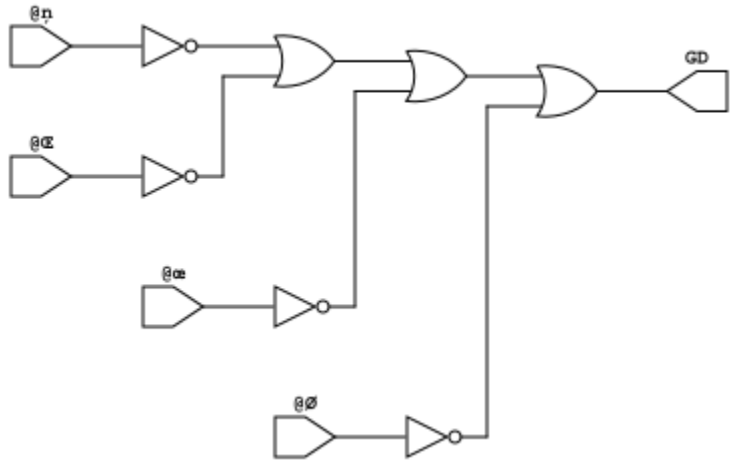

gf180mcu_fd_sc_mcu9t5v0__nand4_1 layout

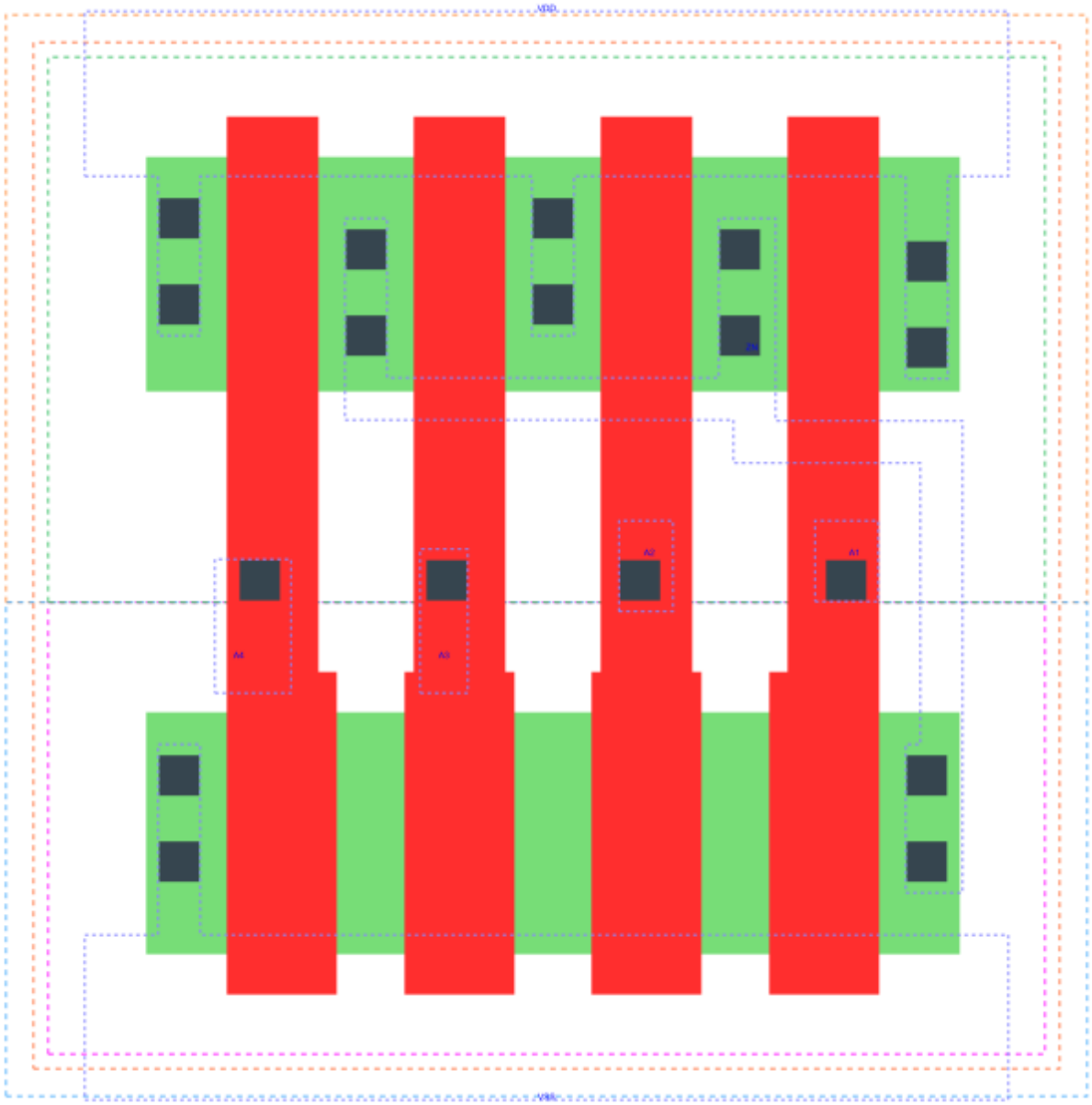

NAND4_X1 is a 4-input NAND with 1X drive strength

Attributes

Attribute	Value
area	25.401600 μm^2

OUTPUT FUNCTIONS

Output Pin	Function
ZN	((!A1)|(!A2)|(!A3)|(!A4))

TRUTH TABLE FOR ZN

A1	A2	A3	A4	ZN
0	?	?	?	1
?	0	?	?	1
?	?	0	?	1
?	?	?	0	1
1	1	1	1	0

FUNCTIONAL SCHEMATIC

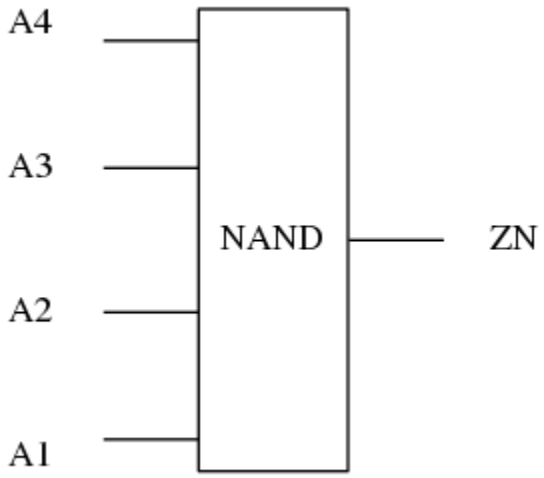

PIN CAPACITANCE (pf)

Pin	Type	Capacitance (pf)
A4	input	0.0058
A3	input	0.0058
A2	input	0.0058
A1	input	0.0059

DELAY AND OUTPUT TRANSITION TIME corresponding to min slew and load

Input Pin	Output	When Condition	Tin (ns)	Out Load (pf)	Delay (ns)	Tout (ns)
A4(LH)	ZN(HL)	A1&A2&A3	0.0100	0.0010	0.1396	0.0681
A4(HL)	ZN(LH)	A1&A2&A3	0.0100	0.0010	0.1589	0.1215
A3(LH)	ZN(HL)	A1&A2&A4	0.0100	0.0010	0.1289	0.0681
A3(HL)	ZN(LH)	A1&A2&A4	0.0100	0.0010	0.1422	0.1019
A2(HL)	ZN(LH)	A1&A3&A4	0.0100	0.0010	0.1169	0.0806
A2(LH)	ZN(HL)	A1&A3&A4	0.0100	0.0010	0.1092	0.0678
A1(HL)	ZN(LH)	A2&A3&A4	0.0100	0.0010	0.0864	0.0571
A1(LH)	ZN(HL)	A2&A3&A4	0.0100	0.0010	0.0801	0.0663

DYNAMIC ENERGY

Input Pin	When Condition	Tin (ns)	Output	Out Load (pf)	Energy (uW/MHz)
A1	A2&A3&A4	0.0100	ZN(LH)	0.0010	0.1659
A4	A1&A2&A3	0.0100	ZN(HL)	0.0010	0.0291
A2	A1&A3&A4	0.0100	ZN(LH)	0.0010	0.2308
A3	A1&A2&A4	0.0100	ZN(HL)	0.0010	0.0291
A1	A2&A3&A4	0.0100	ZN(HL)	0.0010	0.0291
A2	A1&A3&A4	0.0100	ZN(HL)	0.0010	0.0291
A4	A1&A2&A3	0.0100	ZN(LH)	0.0010	0.3509
A3	A1&A2&A4	0.0100	ZN(LH)	0.0010	0.2940
A3(LH)	!A1&!A2&!A4	0.0100	n/a	n/a	-0.0419
A3(LH)	!A1&!A2&A4	0.0100	n/a	n/a	-0.0415
A3(LH)	!A1&A2&!A4	0.0100	n/a	n/a	-0.0418
A3(LH)	!A1&A2&A4	0.0100	n/a	n/a	-0.0415
A3(LH)	A1&!A2&!A4	0.0100	n/a	n/a	-0.0418
A3(LH)	A1&!A2&A4	0.0100	n/a	n/a	-0.0416
A3(LH)	A1&A2&!A4	0.0100	n/a	n/a	-0.0312
A2(LH)	!A1&!A3&!A4	0.0100	n/a	n/a	-0.0420
A2(LH)	!A1&!A3&A4	0.0100	n/a	n/a	-0.0419
A2(LH)	!A1&A3&!A4	0.0100	n/a	n/a	-0.0418
A2(LH)	!A1&A3&A4	0.0100	n/a	n/a	-0.0415
A2(LH)	A1&!A3&!A4	0.0100	n/a	n/a	-0.0278
A2(LH)	A1&!A3&A4	0.0100	n/a	n/a	-0.0278
A2(LH)	A1&A3&!A4	0.0100	n/a	n/a	0.0359

continues on next page

Table 217 – continued from previous page

A1(LH)	!A2&!A3&!A4	0.0100	n/a	n/a	-0.0255
A1(LH)	!A2&!A3&A4	0.0100	n/a	n/a	-0.0255
A1(LH)	!A2&A3&!A4	0.0100	n/a	n/a	-0.0255
A1(LH)	!A2&A3&A4	0.0100	n/a	n/a	-0.0255
A1(LH)	A2&!A3&!A4	0.0100	n/a	n/a	0.0398
A1(LH)	A2&!A3&A4	0.0100	n/a	n/a	0.0399
A1(LH)	A2&A3&!A4	0.0100	n/a	n/a	0.1032
A3(HL)	!A1&!A2&!A4	0.0100	n/a	n/a	0.0504
A3(HL)	!A1&!A2&A4	0.0100	n/a	n/a	0.0441
A3(HL)	!A1&A2&!A4	0.0100	n/a	n/a	0.0651
A3(HL)	!A1&A2&A4	0.0100	n/a	n/a	0.0524
A3(HL)	A1&!A2&!A4	0.0100	n/a	n/a	0.0570
A3(HL)	A1&!A2&A4	0.0100	n/a	n/a	0.0497
A3(HL)	A1&A2&!A4	0.0100	n/a	n/a	0.0465
A2(HL)	!A1&!A3&!A4	0.0100	n/a	n/a	0.0635
A2(HL)	!A1&!A3&A4	0.0100	n/a	n/a	0.0615
A2(HL)	!A1&A3&!A4	0.0100	n/a	n/a	0.0629
A2(HL)	!A1&A3&A4	0.0100	n/a	n/a	0.0539
A2(HL)	A1&!A3&!A4	0.0100	n/a	n/a	0.0483
A2(HL)	A1&!A3&A4	0.0100	n/a	n/a	0.0482
A2(HL)	A1&A3&!A4	0.0100	n/a	n/a	0.0483
A4(LH)	!A1&!A2&!A3	0.0100	n/a	n/a	-0.0418
A4(LH)	!A1&!A2&A3	0.0100	n/a	n/a	-0.0416
A4(LH)	!A1&A2&!A3	0.0100	n/a	n/a	-0.0418
A4(LH)	!A1&A2&A3	0.0100	n/a	n/a	-0.0415
A4(LH)	A1&!A2&!A3	0.0100	n/a	n/a	-0.0418
A4(LH)	A1&!A2&A3	0.0100	n/a	n/a	-0.0416
A4(LH)	A1&A2&!A3	0.0100	n/a	n/a	-0.0417
A1(HL)	!A2&!A3&!A4	0.0100	n/a	n/a	0.0495
A1(HL)	!A2&!A3&A4	0.0100	n/a	n/a	0.0495
A1(HL)	!A2&A3&!A4	0.0100	n/a	n/a	0.0495
A1(HL)	!A2&A3&A4	0.0100	n/a	n/a	0.0494
A1(HL)	A2&!A3&!A4	0.0100	n/a	n/a	0.0488
A1(HL)	A2&!A3&A4	0.0100	n/a	n/a	0.0488
A1(HL)	A2&A3&!A4	0.0100	n/a	n/a	0.0487
A4(HL)	!A1&!A2&!A3	0.0100	n/a	n/a	0.0416
A4(HL)	!A1&!A2&A3	0.0100	n/a	n/a	0.0419
A4(HL)	!A1&A2&!A3	0.0100	n/a	n/a	0.0416
A4(HL)	!A1&A2&A3	0.0100	n/a	n/a	0.0426
A4(HL)	A1&!A2&!A3	0.0100	n/a	n/a	0.0416
A4(HL)	A1&!A2&A3	0.0100	n/a	n/a	0.0449
A4(HL)	A1&A2&!A3	0.0100	n/a	n/a	0.0443

LEAKAGE POWER

When Condition	Power (nW)
!A1&!A2&!A3&!A4	0.0753
!A1&!A2&!A3&A4	0.0753
!A1&!A2&A3&!A4	0.0753
!A1&!A2&A3&A4	0.0753
!A1&A2&!A3&!A4	0.0753
!A1&A2&!A3&A4	0.0753
!A1&A2&A3&!A4	0.0754
!A1&A2&A3&A4	0.0756
A1&!A2&!A3&!A4	0.1151
A1&!A2&!A3&A4	0.1151
A1&!A2&A3&!A4	0.1152
A1&!A2&A3&A4	0.1153
A1&A2&!A3&!A4	0.1542
A1&A2&!A3&A4	0.1544
A1&A2&A3&!A4	0.1931
A1&A2&A3&A4	0.1561

gf180mcu_fd_sc_mcu9t5v0__nand4_2

gf180mcu_fd_sc_mcu9t5v0__nand4_2 symbol

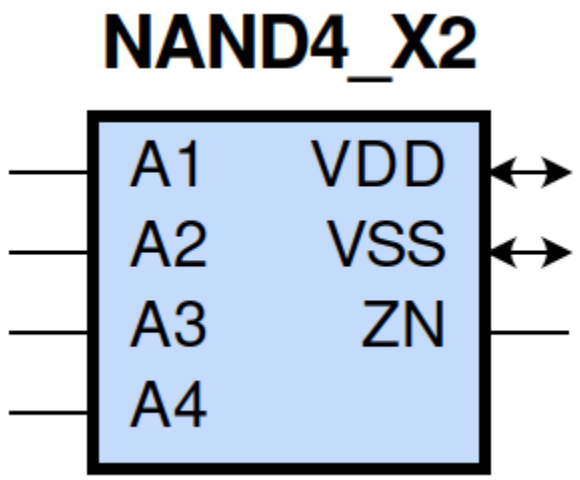

gf180mcu_fd_sc_mcu9t5v0__nand4_2 schematic

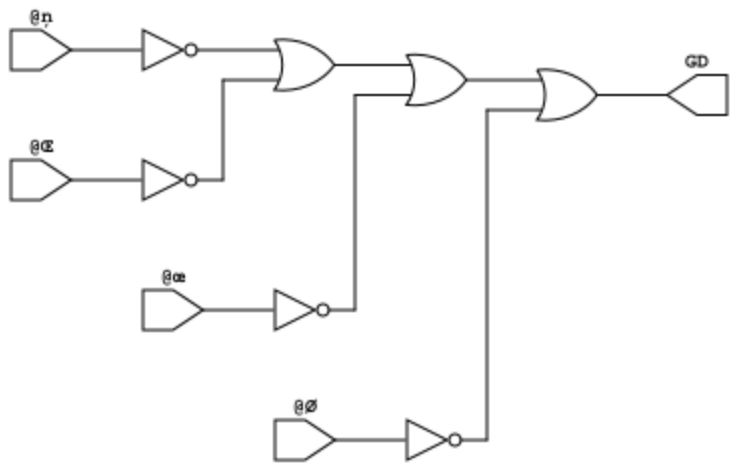

gf180mcu_fd_sc_mcu9t5v0__nand4_2 layout

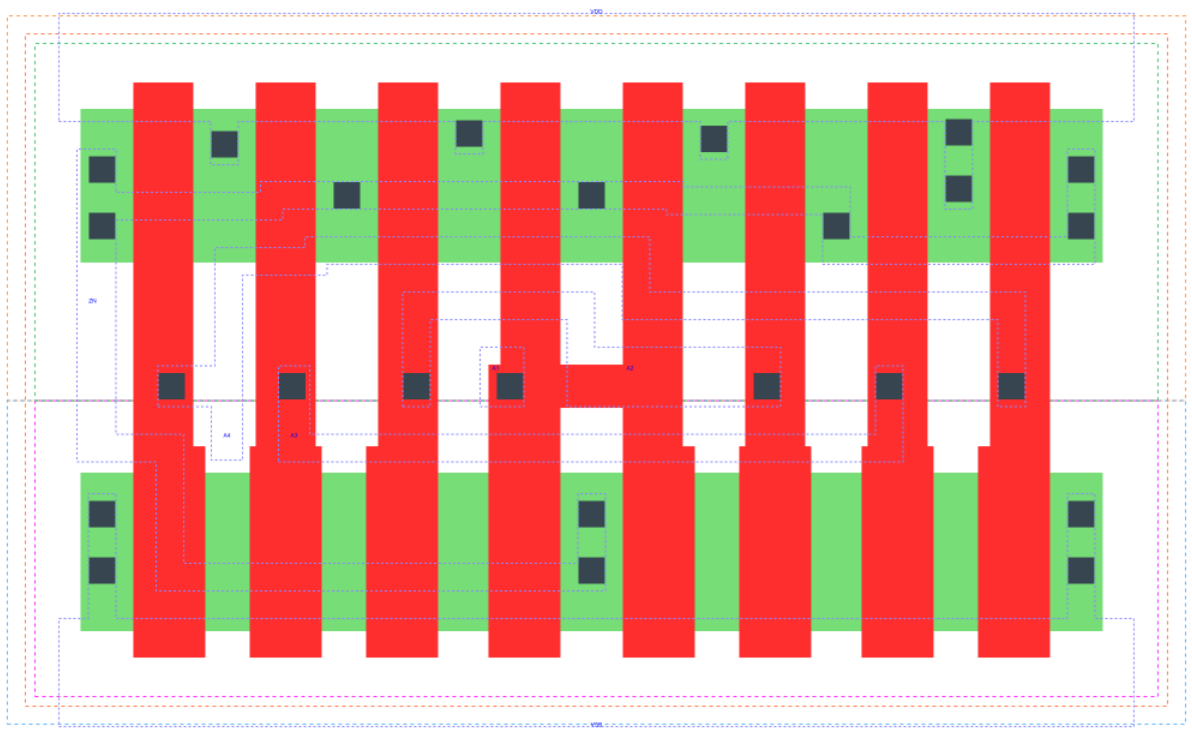

NAND4_X2 is a 4-input NAND with 2X drive strength

Attributes

Attribute	Value
area	45.158400 μm^2

OUTPUT FUNCTIONS

Output Pin	Function
ZN	((!A1)|(!A2)|(!A3)|(!A4))

TRUTH TABLE FOR ZN

A1	A2	A3	A4	ZN
0	?	?	?	1
?	0	?	?	1
?	?	0	?	1
?	?	?	0	1
1	1	1	1	0

FUNCTIONAL SCHEMATIC

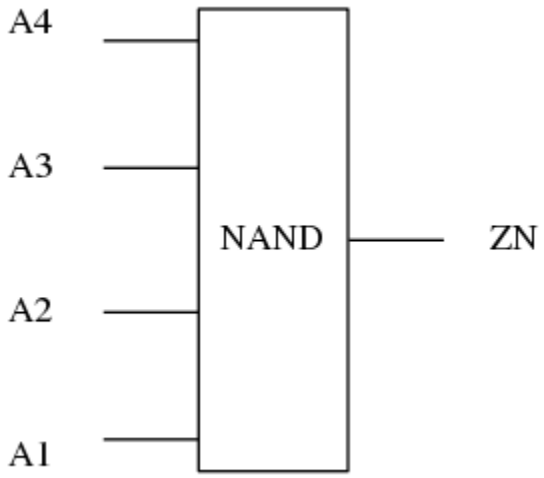

PIN CAPACITANCE (pf)

Pin	Type	Capacitance (pf)
A4	input	0.0136
A3	input	0.0124
A2	input	0.0123
A1	input	0.0117

DELAY AND OUTPUT TRANSITION TIME corresponding to min slew and load

Input Pin	Output	When Condition	Tin (ns)	Out Load (pf)	Delay (ns)	Tout (ns)
A4(LH)	ZN(HL)	A1&A2&A3	0.0100	0.0010	0.1381	0.0663
A4(HL)	ZN(LH)	A1&A2&A3	0.0100	0.0010	0.1563	0.1196
A3(LH)	ZN(HL)	A1&A2&A4	0.0100	0.0010	0.1272	0.0662
A3(HL)	ZN(LH)	A1&A2&A4	0.0100	0.0010	0.1397	0.1002
A2(HL)	ZN(LH)	A1&A3&A4	0.0100	0.0010	0.1147	0.0791
A2(LH)	ZN(HL)	A1&A3&A4	0.0100	0.0010	0.1077	0.0662
A1(HL)	ZN(LH)	A2&A3&A4	0.0100	0.0010	0.0839	0.0554
A1(LH)	ZN(HL)	A2&A3&A4	0.0100	0.0010	0.0783	0.0644

DYNAMIC ENERGY

Input Pin	When Condition	Tin (ns)	Output	Out Load (pf)	Energy (uW/MHz)
A1	A2&A3&A4	0.0100	ZN(LH)	0.0010	0.3263
A4	A1&A2&A3	0.0100	ZN(HL)	0.0010	0.0760
A2	A1&A3&A4	0.0100	ZN(LH)	0.0010	0.4586
A3	A1&A2&A4	0.0100	ZN(HL)	0.0010	0.0760
A1	A2&A3&A4	0.0100	ZN(HL)	0.0010	0.0760
A2	A1&A3&A4	0.0100	ZN(HL)	0.0010	0.0761
A4	A1&A2&A3	0.0100	ZN(LH)	0.0010	0.6987
A3	A1&A2&A4	0.0100	ZN(LH)	0.0010	0.5838
A3(LH)	!A1&!A2&!A4	0.0100	n/a	n/a	-0.0835
A3(LH)	!A1&!A2&A4	0.0100	n/a	n/a	-0.0828
A3(LH)	!A1&A2&!A4	0.0100	n/a	n/a	-0.0831
A3(LH)	!A1&A2&A4	0.0100	n/a	n/a	-0.0827
A3(LH)	A1&!A2&!A4	0.0100	n/a	n/a	-0.0834
A3(LH)	A1&!A2&A4	0.0100	n/a	n/a	-0.0829
A3(LH)	A1&A2&!A4	0.0100	n/a	n/a	-0.0616
A2(LH)	!A1&!A3&!A4	0.0100	n/a	n/a	-0.0835
A2(LH)	!A1&!A3&A4	0.0100	n/a	n/a	-0.0834
A2(LH)	!A1&A3&!A4	0.0100	n/a	n/a	-0.0832
A2(LH)	!A1&A3&A4	0.0100	n/a	n/a	-0.0827
A2(LH)	A1&!A3&!A4	0.0100	n/a	n/a	-0.0563
A2(LH)	A1&!A3&A4	0.0100	n/a	n/a	-0.0563
A2(LH)	A1&A3&!A4	0.0100	n/a	n/a	0.0717

continues on next page

Table 218 – continued from previous page

A1(LH)	!A2&!A3&!A4	0.0100	n/a	n/a	-0.0495
A1(LH)	!A2&!A3&A4	0.0100	n/a	n/a	-0.0496
A1(LH)	!A2&A3&!A4	0.0100	n/a	n/a	-0.0496
A1(LH)	!A2&A3&A4	0.0100	n/a	n/a	-0.0496
A1(LH)	A2&!A3&!A4	0.0100	n/a	n/a	0.0800
A1(LH)	A2&!A3&A4	0.0100	n/a	n/a	0.0801
A1(LH)	A2&A3&!A4	0.0100	n/a	n/a	0.2076
A3(HL)	!A1&!A2&!A4	0.0100	n/a	n/a	0.1004
A3(HL)	!A1&!A2&A4	0.0100	n/a	n/a	0.0881
A3(HL)	!A1&A2&!A4	0.0100	n/a	n/a	0.1301
A3(HL)	!A1&A2&A4	0.0100	n/a	n/a	0.1049
A3(HL)	A1&!A2&!A4	0.0100	n/a	n/a	0.1138
A3(HL)	A1&!A2&A4	0.0100	n/a	n/a	0.0994
A3(HL)	A1&A2&!A4	0.0100	n/a	n/a	0.0929
A2(HL)	!A1&!A3&!A4	0.0100	n/a	n/a	0.1269
A2(HL)	!A1&!A3&A4	0.0100	n/a	n/a	0.1231
A2(HL)	!A1&A3&!A4	0.0100	n/a	n/a	0.1258
A2(HL)	!A1&A3&A4	0.0100	n/a	n/a	0.1076
A2(HL)	A1&!A3&!A4	0.0100	n/a	n/a	0.0965
A2(HL)	A1&!A3&A4	0.0100	n/a	n/a	0.0964
A2(HL)	A1&A3&!A4	0.0100	n/a	n/a	0.0966
A4(LH)	!A1&!A2&!A3	0.0100	n/a	n/a	-0.0831
A4(LH)	!A1&!A2&A3	0.0100	n/a	n/a	-0.0829
A4(LH)	!A1&A2&!A3	0.0100	n/a	n/a	-0.0832
A4(LH)	!A1&A2&A3	0.0100	n/a	n/a	-0.0828
A4(LH)	A1&!A2&!A3	0.0100	n/a	n/a	-0.0832
A4(LH)	A1&!A2&A3	0.0100	n/a	n/a	-0.0829
A4(LH)	A1&A2&!A3	0.0100	n/a	n/a	-0.0832
A1(HL)	!A2&!A3&!A4	0.0100	n/a	n/a	0.0985
A1(HL)	!A2&!A3&A4	0.0100	n/a	n/a	0.0984
A1(HL)	!A2&A3&!A4	0.0100	n/a	n/a	0.0984
A1(HL)	!A2&A3&A4	0.0100	n/a	n/a	0.0984
A1(HL)	A2&!A3&!A4	0.0100	n/a	n/a	0.0974
A1(HL)	A2&!A3&A4	0.0100	n/a	n/a	0.0974
A1(HL)	A2&A3&!A4	0.0100	n/a	n/a	0.0974
A4(HL)	!A1&!A2&!A3	0.0100	n/a	n/a	0.0830
A4(HL)	!A1&!A2&A3	0.0100	n/a	n/a	0.0835
A4(HL)	!A1&A2&!A3	0.0100	n/a	n/a	0.0831
A4(HL)	!A1&A2&A3	0.0100	n/a	n/a	0.0850
A4(HL)	A1&!A2&!A3	0.0100	n/a	n/a	0.0830
A4(HL)	A1&!A2&A3	0.0100	n/a	n/a	0.0895
A4(HL)	A1&A2&!A3	0.0100	n/a	n/a	0.0884

LEAKAGE POWER

When Condition	Power (nW)
!A1&!A2&!A3&!A4	0.1005
!A1&!A2&!A3&A4	0.1005
!A1&!A2&A3&!A4	0.1005
!A1&!A2&A3&A4	0.1005
!A1&A2&!A3&!A4	0.1007
!A1&A2&!A3&A4	0.1007
!A1&A2&A3&!A4	0.1008
!A1&A2&A3&A4	0.1012
A1&!A2&!A3&!A4	0.1802
A1&!A2&!A3&A4	0.1802
A1&!A2&A3&!A4	0.1804
A1&!A2&A3&A4	0.1807
A1&A2&!A3&!A4	0.2584
A1&A2&!A3&A4	0.2588
A1&A2&A3&!A4	0.3361
A1&A2&A3&A4	0.2622

gf180mcu_fd_sc_mcu9t5v0__nand4_4

gf180mcu_fd_sc_mcu9t5v0__nand4_4 symbol

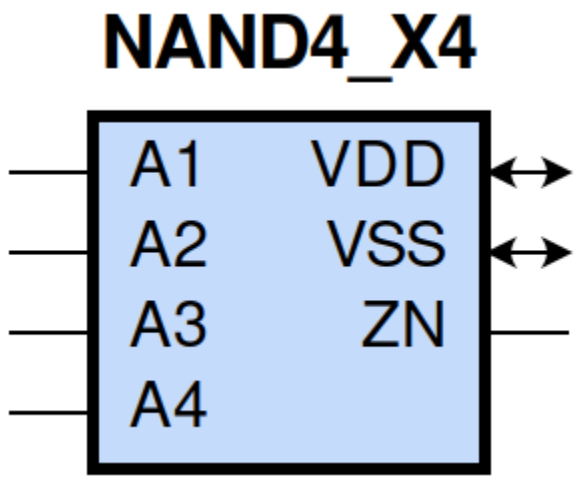

gf180mcu_fd_sc_mcu9t5v0__nand4_4 schematic

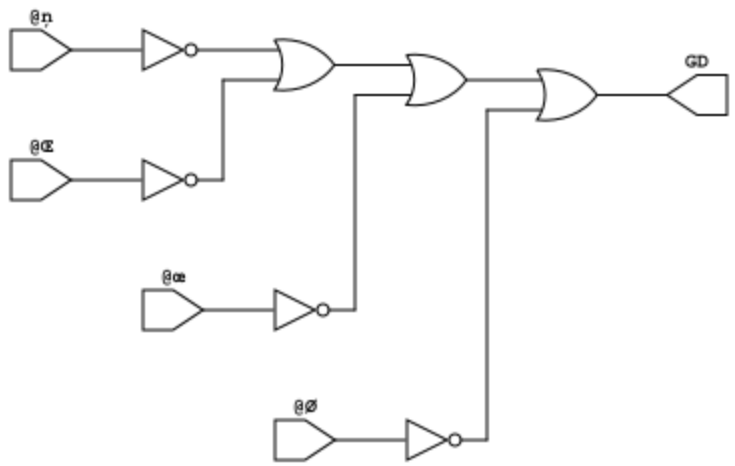

gf180mcu_fd_sc_mcu9t5v0__nand4_4 layout

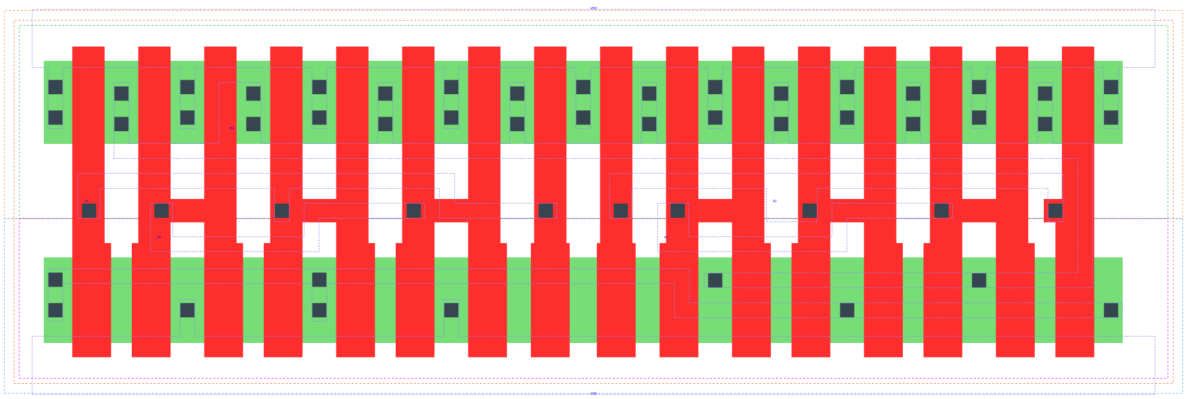

NAND4_X4 is a 4-input NAND with 4X drive strength

Attributes

Attribute	Value
area	87.494400 μm^2

OUTPUT FUNCTIONS

Output Pin	Function
ZN	((!A1)|(!A2)|(!A3)|(!A4))

TRUTH TABLE FOR ZN

A1	A2	A3	A4	ZN
0	?	?	?	1
?	0	?	?	1
?	?	0	?	1
?	?	?	0	1
1	1	1	1	0

FUNCTIONAL SCHEMATIC

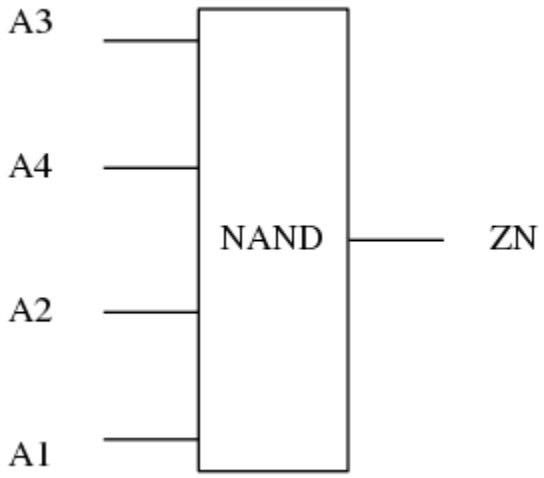

PIN CAPACITANCE (pf)

Pin	Type	Capacitance (pf)
A3	input	0.0247
A4	input	0.0236
A2	input	0.0247
A1	input	0.0243

DELAY AND OUTPUT TRANSITION TIME corresponding to min slew and load

Input Pin	Output	When Condition	Tin (ns)	Out Load (pf)	Delay (ns)	Tout (ns)
A3(LH)	ZN(HL)	A1&A2&A4	0.0100	0.0010	0.1262	0.0603
A3(HL)	ZN(LH)	A1&A2&A4	0.0100	0.0010	0.1394	0.1003
A4(LH)	ZN(HL)	A1&A2&A3	0.0100	0.0010	0.1368	0.0603
A4(HL)	ZN(LH)	A1&A2&A3	0.0100	0.0010	0.1538	0.1191
A2(HL)	ZN(LH)	A1&A3&A4	0.0100	0.0010	0.1055	0.0716
A2(LH)	ZN(HL)	A1&A3&A4	0.0100	0.0010	0.0972	0.0596
A1(HL)	ZN(LH)	A2&A3&A4	0.0100	0.0010	0.0753	0.0484
A1(LH)	ZN(HL)	A2&A3&A4	0.0100	0.0010	0.0688	0.0564

DYNAMIC ENERGY

Input Pin	When Condition	Tin (ns)	Output	Out Load (pf)	Energy (uW/MHz)
A1	A2&A3&A4	0.0100	ZN(LH)	0.0010	0.6195
A4	A1&A2&A3	0.0100	ZN(HL)	0.0010	0.1152
A2	A1&A3&A4	0.0100	ZN(LH)	0.0010	0.8782
A3	A1&A2&A4	0.0100	ZN(HL)	0.0010	0.1151
A1	A2&A3&A4	0.0100	ZN(HL)	0.0010	0.1152
A2	A1&A3&A4	0.0100	ZN(HL)	0.0010	0.1152
A4	A1&A2&A3	0.0100	ZN(LH)	0.0010	1.4589
A3	A1&A2&A4	0.0100	ZN(LH)	0.0010	1.2372
A3(LH)	!A1&!A2&!A4	0.0100	n/a	n/a	-0.1664
A3(LH)	!A1&!A2&A4	0.0100	n/a	n/a	-0.1653
A3(LH)	!A1&A2&!A4	0.0100	n/a	n/a	-0.1661
A3(LH)	!A1&A2&A4	0.0100	n/a	n/a	-0.1654
A3(LH)	A1&!A2&!A4	0.0100	n/a	n/a	-0.1663
A3(LH)	A1&!A2&A4	0.0100	n/a	n/a	-0.1654
A3(LH)	A1&A2&!A4	0.0100	n/a	n/a	-0.1345
A2(LH)	!A1&!A3&!A4	0.0100	n/a	n/a	-0.1663
A2(LH)	!A1&!A3&A4	0.0100	n/a	n/a	-0.1663
A2(LH)	!A1&A3&!A4	0.0100	n/a	n/a	-0.1660
A2(LH)	!A1&A3&A4	0.0100	n/a	n/a	-0.1652
A2(LH)	A1&!A3&!A4	0.0100	n/a	n/a	-0.0128
A2(LH)	A1&!A3&A4	0.0100	n/a	n/a	-0.0128
A2(LH)	A1&A3&!A4	0.0100	n/a	n/a	0.2378
A1(LH)	!A2&!A3&!A4	0.0100	n/a	n/a	-0.1047
A1(LH)	!A2&!A3&A4	0.0100	n/a	n/a	-0.1048
A1(LH)	!A2&A3&!A4	0.0100	n/a	n/a	-0.1048
A1(LH)	!A2&A3&A4	0.0100	n/a	n/a	-0.1049
A1(LH)	A2&!A3&!A4	0.0100	n/a	n/a	0.2534
A1(LH)	A2&!A3&A4	0.0100	n/a	n/a	0.2535
A1(LH)	A2&A3&!A4	0.0100	n/a	n/a	0.5037
A3(HL)	!A1&!A2&!A4	0.0100	n/a	n/a	0.2068
A3(HL)	!A1&!A2&A4	0.0100	n/a	n/a	0.1758
A3(HL)	!A1&A2&!A4	0.0100	n/a	n/a	0.2576
A3(HL)	!A1&A2&A4	0.0100	n/a	n/a	0.2079
A3(HL)	A1&!A2&!A4	0.0100	n/a	n/a	0.2361

continues on next page

Table 219 – continued from previous page

A3(HL)	A1&!A2&A4	0.0100	n/a	n/a	0.2008
A3(HL)	A1&A2&!A4	0.0100	n/a	n/a	0.1796
A2(HL)	!A1&!A3&!A4	0.0100	n/a	n/a	0.2580
A2(HL)	!A1&!A3&A4	0.0100	n/a	n/a	0.2487
A2(HL)	!A1&A3&!A4	0.0100	n/a	n/a	0.2464
A2(HL)	!A1&A3&A4	0.0100	n/a	n/a	0.2122
A2(HL)	A1&!A3&!A4	0.0100	n/a	n/a	0.1932
A2(HL)	A1&!A3&A4	0.0100	n/a	n/a	0.1931
A2(HL)	A1&A3&!A4	0.0100	n/a	n/a	0.1933
A4(LH)	!A1&!A2&!A3	0.0100	n/a	n/a	-0.1657
A4(LH)	!A1&!A2&A3	0.0100	n/a	n/a	-0.1654
A4(LH)	!A1&A2&!A3	0.0100	n/a	n/a	-0.1658
A4(LH)	!A1&A2&A3	0.0100	n/a	n/a	-0.1656
A4(LH)	A1&!A2&!A3	0.0100	n/a	n/a	-0.1658
A4(LH)	A1&!A2&A3	0.0100	n/a	n/a	-0.1656
A4(LH)	A1&A2&!A3	0.0100	n/a	n/a	-0.1659
A1(HL)	!A2&!A3&!A4	0.0100	n/a	n/a	0.1963
A1(HL)	!A2&!A3&A4	0.0100	n/a	n/a	0.1963
A1(HL)	!A2&A3&!A4	0.0100	n/a	n/a	0.1963
A1(HL)	!A2&A3&A4	0.0100	n/a	n/a	0.1961
A1(HL)	A2&!A3&!A4	0.0100	n/a	n/a	0.1948
A1(HL)	A2&!A3&A4	0.0100	n/a	n/a	0.1947
A1(HL)	A2&A3&!A4	0.0100	n/a	n/a	0.1947
A4(HL)	!A1&!A2&!A3	0.0100	n/a	n/a	0.1663
A4(HL)	!A1&!A2&A3	0.0100	n/a	n/a	0.1669
A4(HL)	!A1&A2&!A3	0.0100	n/a	n/a	0.1663
A4(HL)	!A1&A2&A3	0.0100	n/a	n/a	0.1685
A4(HL)	A1&!A2&!A3	0.0100	n/a	n/a	0.1662
A4(HL)	A1&!A2&A3	0.0100	n/a	n/a	0.1738
A4(HL)	A1&A2&!A3	0.0100	n/a	n/a	0.1715

LEAKAGE POWER

When Condition	Power (nW)
!A1&!A2&!A3&!A4	0.1510
!A1&!A2&!A3&A4	0.1510
!A1&!A2&A3&!A4	0.1510
!A1&!A2&A3&A4	0.1510
!A1&A2&!A3&!A4	0.1513
!A1&A2&!A3&A4	0.1513
!A1&A2&A3&!A4	0.1515
!A1&A2&A3&A4	0.1523
A1&!A2&!A3&!A4	0.3105
A1&!A2&!A3&A4	0.3105
A1&!A2&A3&!A4	0.3107
A1&!A2&A3&A4	0.3114
A1&A2&!A3&!A4	0.4665
A1&A2&!A3&A4	0.4674
A1&A2&A3&!A4	0.6220
A1&A2&A3&A4	0.4745

gf180mcu_fd_sc_mcu9t5v0__nor2_1

gf180mcu_fd_sc_mcu9t5v0__nor2_1 symbol

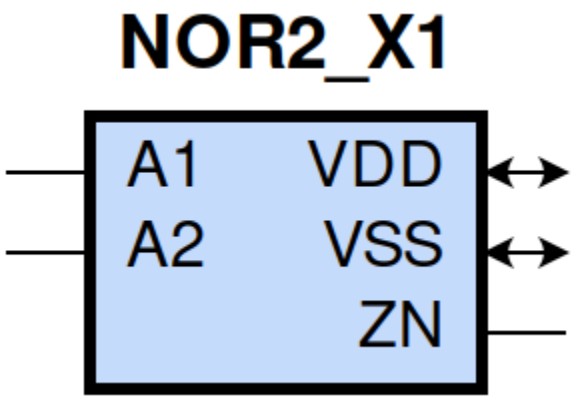

gf180mcu_fd_sc_mcu9t5v0__nor2_1 schematic

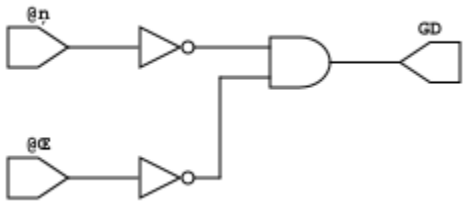

gf180mcu_fd_sc_mcu9t5v0__nor2_1 layout

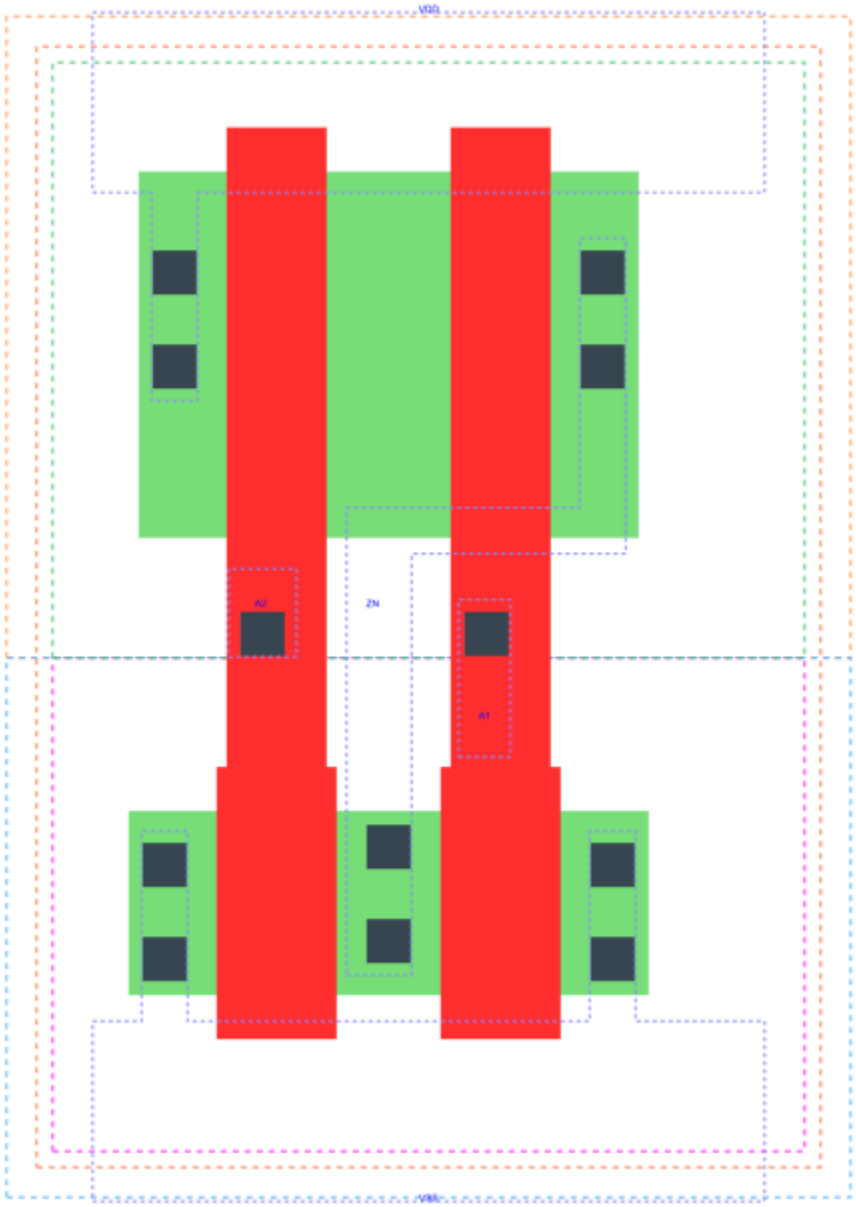

NOR2_X1 is a 2-input NOR with 1X drive strength

Attributes

Attribute	Value
area	16.934400 μm^2

OUTPUT FUNCTIONS

Output Pin	Function
ZN	((!A1)&(!A2))

TRUTH TABLE FOR ZN

A1	A2	ZN
0	0	1
1	?	0
?	1	0

FUNCTIONAL SCHEMATIC

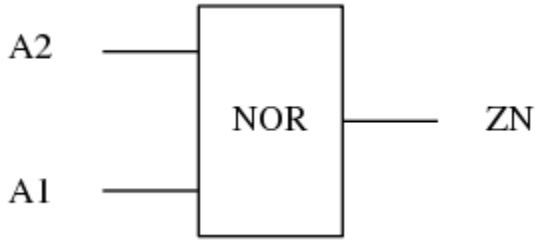

PIN CAPACITANCE (pf)

Pin	Type	Capacitance (pf)
A2	input	0.0058
A1	input	0.0061

DELAY AND OUTPUT TRANSITION TIME corresponding to min slew and load

Input Pin	Output	When Condition	Tin (ns)	Out Load (pf)	Delay (ns)	Tout (ns)
A2(HL)	ZN(LH)	!A1	0.0100	0.0010	0.1015	0.0610
A2(LH)	ZN(HL)	!A1	0.0100	0.0010	0.0638	0.0364
A1(HL)	ZN(LH)	!A2	0.0100	0.0010	0.0766	0.0599
A1(LH)	ZN(HL)	!A2	0.0100	0.0010	0.0463	0.0227

DYNAMIC ENERGY

Input Pin	When Condition	Tin (ns)	Output	Out Load (pf)	Energy (uW/MHz)
A1	!A2	0.0100	ZN(LH)	0.0010	0.1407
A2	!A1	0.0100	ZN(LH)	0.0010	0.1859
A1	!A2	0.0100	ZN(HL)	0.0010	-0.0017
A2	!A1	0.0100	ZN(HL)	0.0010	0.0335
A2(LH)	A1	0.0100	n/a	n/a	-0.0497
A1(LH)	A2	0.0100	n/a	n/a	-0.0170
A2(HL)	A1	0.0100	n/a	n/a	0.0596
A1(HL)	A2	0.0100	n/a	n/a	0.0410

LEAKAGE POWER

When Condition	Power (nW)
!A1&!A2	0.1009
!A1&A2	0.1123
A1&!A2	0.0769
A1&A2	0.0769

gf180mcu_fd_sc_mcu9t5v0__nor2_2

gf180mcu_fd_sc_mcu9t5v0__nor2_2 symbol

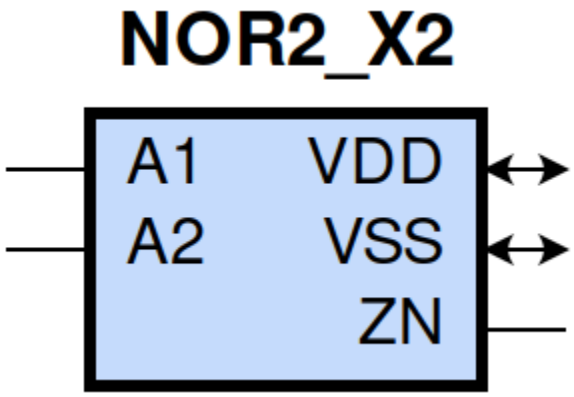

gf180mcu_fd_sc_mcu9t5v0__nor2_2 schematic

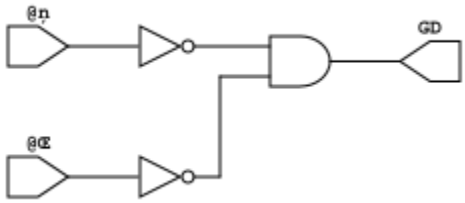

gf180mcu_fd_sc_mcu9t5v0__nor2_2 layout

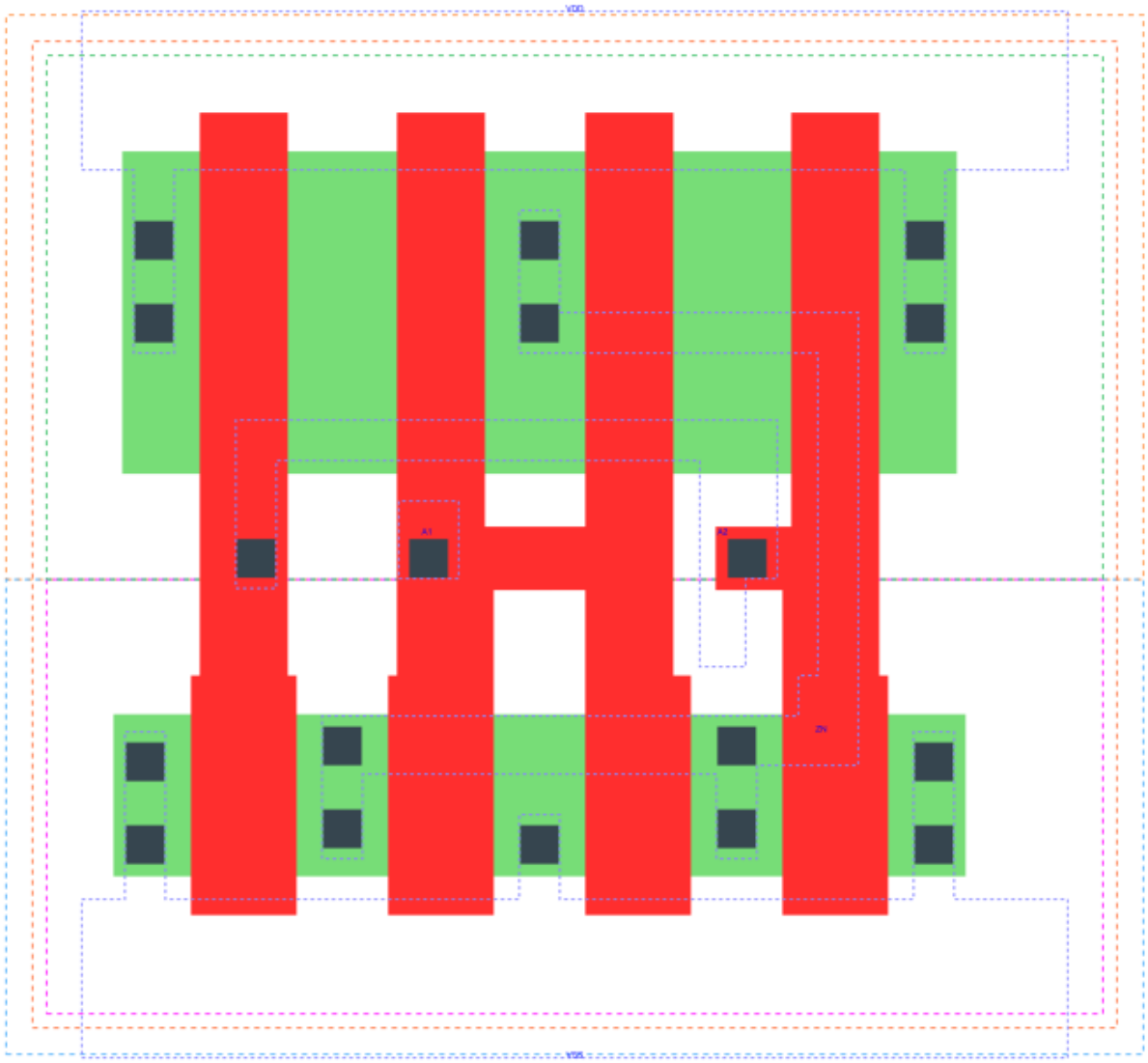

NOR2_X2 is a 2-input NOR with 2X drive strength

Attributes

Attribute	Value
area	28.224000 μm^2

OUTPUT FUNCTIONS

Output Pin	Function
ZN	((!A1)&(!A2))

TRUTH TABLE FOR ZN

A1	A2	ZN
0	0	1
1	?	0
?	1	0

FUNCTIONAL SCHEMATIC

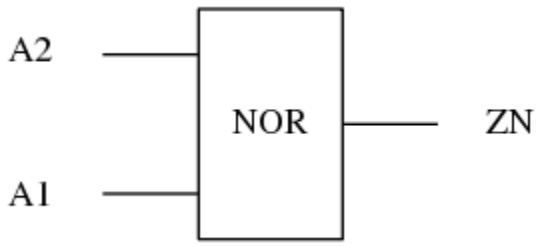

PIN CAPACITANCE (pf)

Pin	Type	Capacitance (pf)
A2	input	0.0123
A1	input	0.0119

DELAY AND OUTPUT TRANSITION TIME corresponding to min slew and load

Input Pin	Output	When Condition	Tin (ns)	Out Load (pf)	Delay (ns)	Tout (ns)
A2(HL)	ZN(LH)	!A1	0.0100	0.0010	0.0881	0.0499
A2(LH)	ZN(HL)	!A1	0.0100	0.0010	0.0565	0.0309
A1(HL)	ZN(LH)	!A2	0.0100	0.0010	0.0629	0.0483
A1(LH)	ZN(HL)	!A2	0.0100	0.0010	0.0397	0.0177

DYNAMIC ENERGY

Input Pin	When Condition	Tin (ns)	Output	Out Load (pf)	Energy (uW/MHz)
A1	!A2	0.0100	ZN(LH)	0.0010	0.2689
A2	!A1	0.0100	ZN(LH)	0.0010	0.3597
A1	!A2	0.0100	ZN(HL)	0.0010	-0.0281
A2	!A1	0.0100	ZN(HL)	0.0010	0.0453
A2(LH)	A1	0.0100	n/a	n/a	-0.0993
A1(LH)	A2	0.0100	n/a	n/a	-0.0339
A2(HL)	A1	0.0100	n/a	n/a	0.1189
A1(HL)	A2	0.0100	n/a	n/a	0.0832

LEAKAGE POWER

When Condition	Power (nW)
!A1&!A2	0.1519
!A1&A2	0.1746
A1&!A2	0.1037
A1&A2	0.1037

gf180mcu_fd_sc_mcu9t5v0__nor2_4

gf180mcu_fd_sc_mcu9t5v0__nor2_4 symbol

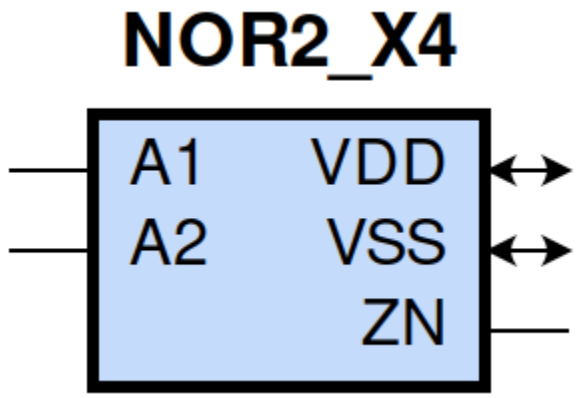

gf180mcu_fd_sc_mcu9t5v0__nor2_4 schematic

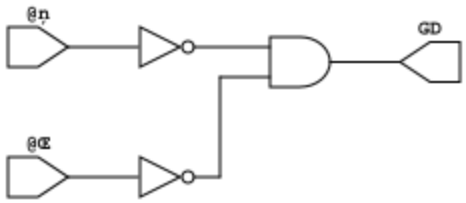

gf180mcu_fd_sc_mcu9t5v0__nor2_4 layout

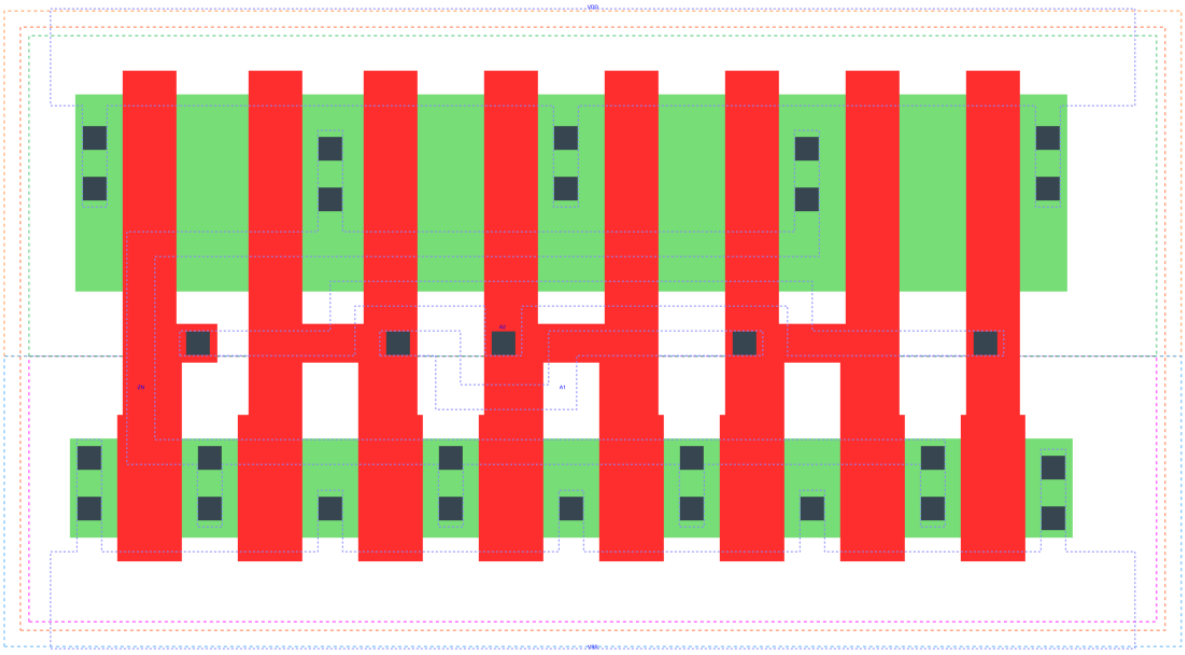

NOR2_X4 is a 2-input NOR with 4X drive strength

Attributes

Attribute	Value
area	50.803200 μm^2

OUTPUT FUNCTIONS

Output Pin	Function
ZN	((!A1)&(!A2))

TRUTH TABLE FOR ZN

A1	A2	ZN
0	0	1
1	?	0
?	1	0

FUNCTIONAL SCHEMATIC

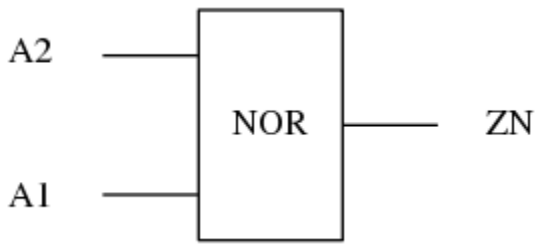

PIN CAPACITANCE (pf)

Pin	Type	Capacitance (pf)
A2	input	0.0246
A1	input	0.0246

DELAY AND OUTPUT TRANSITION TIME corresponding to min slew and load

Input Pin	Output	When Condition	Tin (ns)	Out Load (pf)	Delay (ns)	Tout (ns)
A2(HL)	ZN(LH)	!A1	0.0100	0.0010	0.0857	0.0480
A2(LH)	ZN(HL)	!A1	0.0100	0.0010	0.0553	0.0300
A1(HL)	ZN(LH)	!A2	0.0100	0.0010	0.0607	0.0463
A1(LH)	ZN(HL)	!A2	0.0100	0.0010	0.0386	0.0168

DYNAMIC ENERGY

Input Pin	When Condition	Tin (ns)	Output	Out Load (pf)	Energy (uW/MHz)
A1	!A2	0.0100	ZN(LH)	0.0010	0.5406
A2	!A1	0.0100	ZN(LH)	0.0010	0.7228
A1	!A2	0.0100	ZN(HL)	0.0010	-0.0556
A2	!A1	0.0100	ZN(HL)	0.0010	0.0909
A2(LH)	A1	0.0100	n/a	n/a	-0.1987
A1(LH)	A2	0.0100	n/a	n/a	-0.0678
A2(HL)	A1	0.0100	n/a	n/a	0.2382
A1(HL)	A2	0.0100	n/a	n/a	0.1651

LEAKAGE POWER

When Condition	Power (nW)
!A1&!A2	0.2538
!A1&A2	0.2993
A1&!A2	0.1574
A1&A2	0.1574

gf180mcu_fd_sc_mcu9t5v0__nor3_1

gf180mcu_fd_sc_mcu9t5v0__nor3_1 symbol

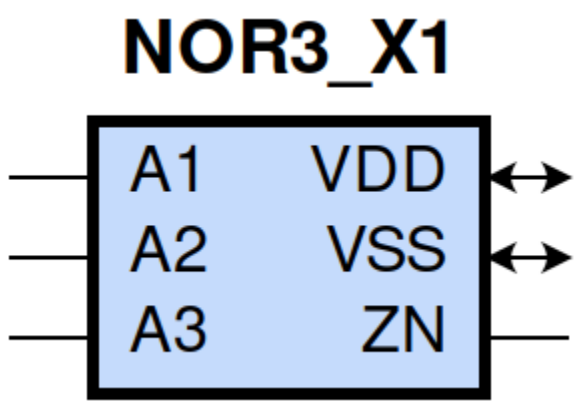

gf180mcu_fd_sc_mcu9t5v0__nor3_1 schematic

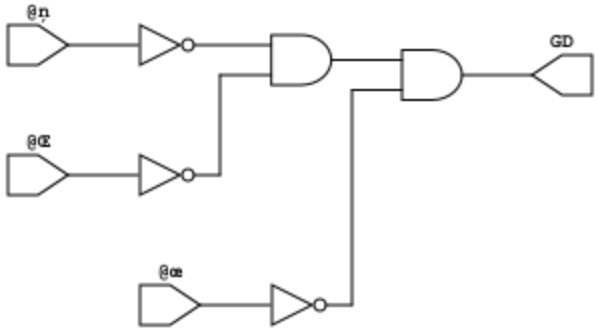

gf180mcu_fd_sc_mcu9t5v0__nor3_1 layout

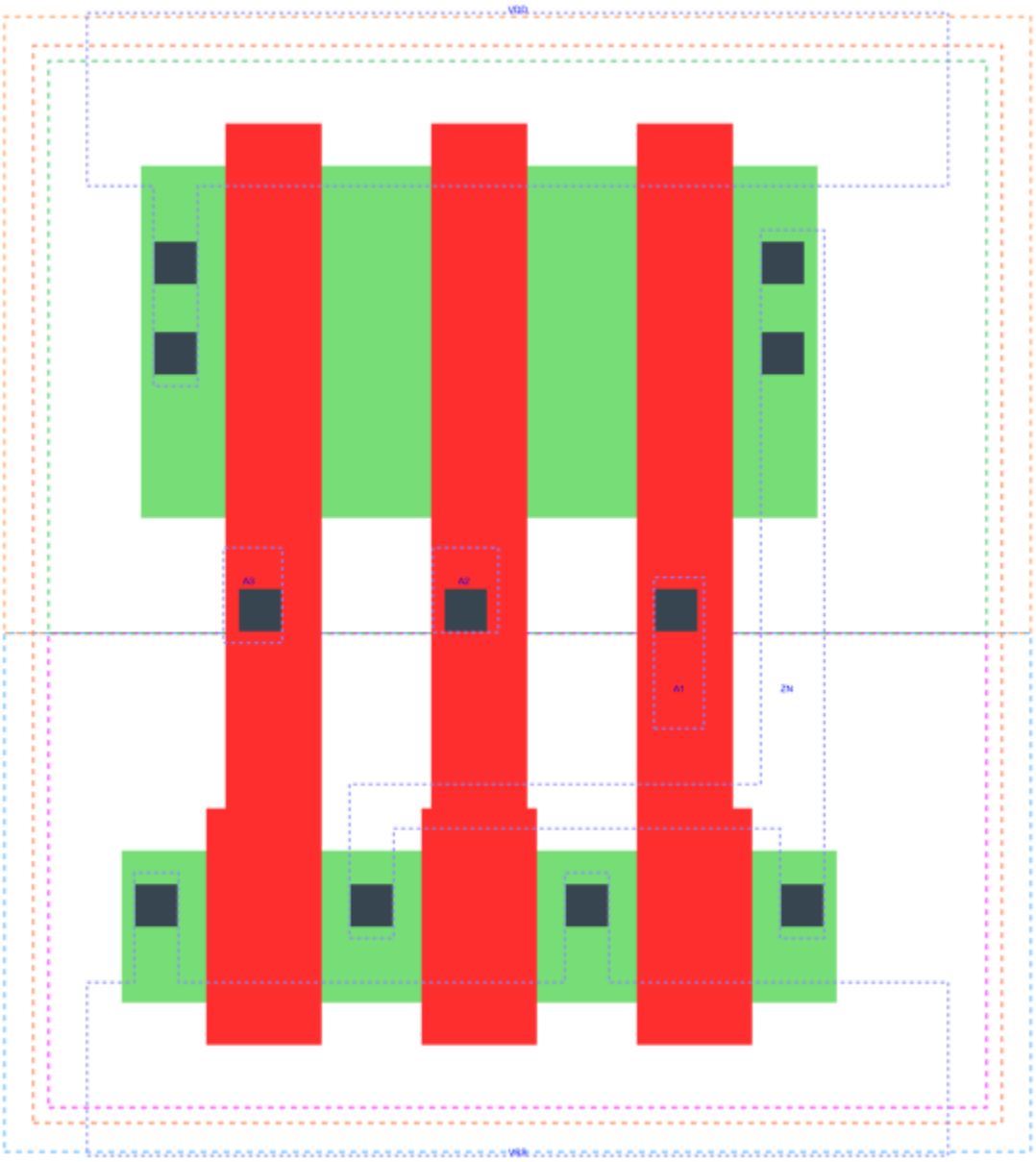

NOR3_X1 is a 3-input NOR with 1X drive strength

Attributes

Attribute	Value
area	22.579200 μm^2

OUTPUT FUNCTIONS

Output Pin	Function
ZN	((!A1)&(!A2)&(!A3))

TRUTH TABLE FOR ZN

A1	A2	A3	ZN
0	0	0	1
1	?	?	0
?	1	?	0
?	?	1	0

FUNCTIONAL SCHEMATIC

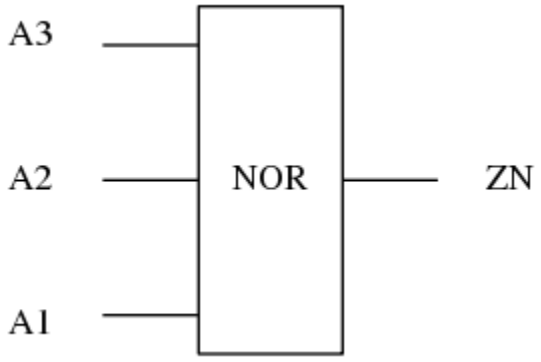

PIN CAPACITANCE (pf)

Pin	Type	Capacitance (pf)
A3	input	0.0055
A2	input	0.0055
A1	input	0.0059

DELAY AND OUTPUT TRANSITION TIME corresponding to min slew and load

Input Pin	Output	When Condition	Tin (ns)	Out Load (pf)	Delay (ns)	Tout (ns)
A3(LH)	ZN(HL)	!A1&!A2	0.0100	0.0010	0.0859	0.0584
A3(HL)	ZN(LH)	!A1&!A2	0.0100	0.0010	0.1869	0.1100
A2(HL)	ZN(LH)	!A1&!A3	0.0100	0.0010	0.1640	0.1096
A2(LH)	ZN(HL)	!A1&!A3	0.0100	0.0010	0.0800	0.0460
A1(HL)	ZN(LH)	!A2&!A3	0.0100	0.0010	0.1085	0.1053
A1(LH)	ZN(HL)	!A2&!A3	0.0100	0.0010	0.0572	0.0302

DYNAMIC ENERGY

Input Pin	When Condition	Tin (ns)	Output	Out Load (pf)	Energy (uW/MHz)
A1	!A2&!A3	0.0100	ZN(LH)	0.0010	0.1605
A2	!A1&!A3	0.0100	ZN(LH)	0.0010	0.2056
A3	!A1&!A2	0.0100	ZN(HL)	0.0010	0.0685
A1	!A2&!A3	0.0100	ZN(HL)	0.0010	-0.0008
A2	!A1&!A3	0.0100	ZN(HL)	0.0010	0.0359
A3	!A1&!A2	0.0100	ZN(LH)	0.0010	0.2491
A3(LH)	!A1&A2	0.0100	n/a	n/a	-0.0516
A3(LH)	A1&!A2	0.0100	n/a	n/a	-0.0492
A3(LH)	A1&A2	0.0100	n/a	n/a	-0.0563
A2(LH)	!A1&A3	0.0100	n/a	n/a	-0.0180
A2(LH)	A1&!A3	0.0100	n/a	n/a	-0.0496
A2(LH)	A1&A3	0.0100	n/a	n/a	-0.0439
A1(LH)	!A2&A3	0.0100	n/a	n/a	-0.0164
A1(LH)	A2&!A3	0.0100	n/a	n/a	-0.0169
A1(LH)	A2&A3	0.0100	n/a	n/a	-0.0169
A3(HL)	!A1&A2	0.0100	n/a	n/a	0.0596
A3(HL)	A1&!A2	0.0100	n/a	n/a	0.0596
A3(HL)	A1&A2	0.0100	n/a	n/a	0.0596
A2(HL)	!A1&A3	0.0100	n/a	n/a	0.0377
A2(HL)	A1&!A3	0.0100	n/a	n/a	0.0598
A2(HL)	A1&A3	0.0100	n/a	n/a	0.0352
A1(HL)	!A2&A3	0.0100	n/a	n/a	0.0764
A1(HL)	A2&!A3	0.0100	n/a	n/a	0.0397
A1(HL)	A2&A3	0.0100	n/a	n/a	0.0397

LEAKAGE POWER

When Condition	Power (nW)
!A1&!A2&!A3	0.1263
!A1&!A2&A3	0.1476
!A1&A2&!A3	0.1123
!A1&A2&A3	0.1123
A1&!A2&!A3	0.0769
A1&!A2&A3	0.0769
A1&A2&!A3	0.0769
A1&A2&A3	0.0769

gf180mcu_fd_sc_mcu9t5v0__nor3_2

gf180mcu_fd_sc_mcu9t5v0__nor3_2 symbol

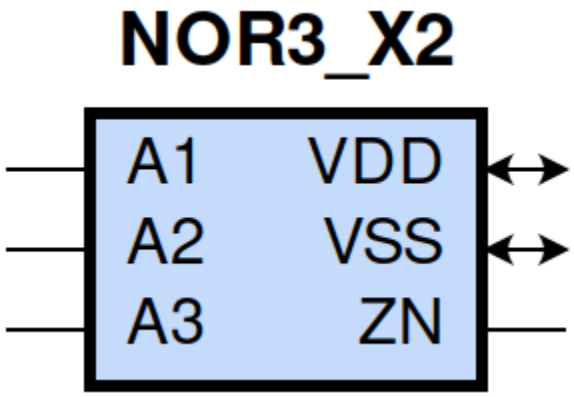

gf180mcu_fd_sc_mcu9t5v0__nor3_2 schematic

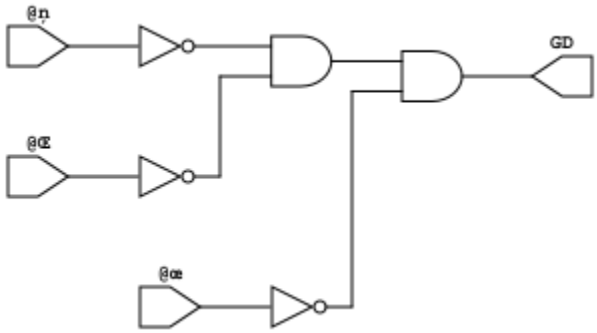

gf180mcu_fd_sc_mcu9t5v0__nor3_2 layout

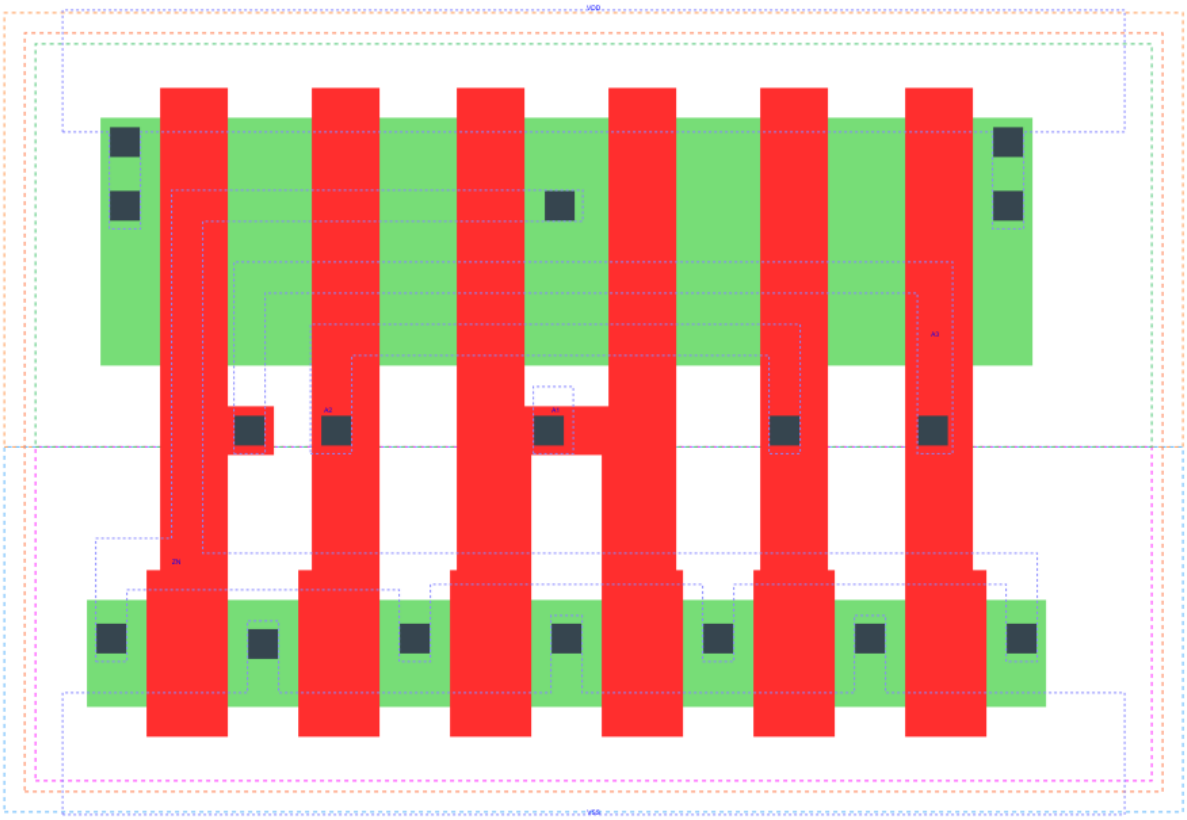

NOR3_X2 is a 3-input NOR with 2X drive strength

Attributes

Attribute	Value
area	39.513600 μm^2

OUTPUT FUNCTIONS

Output Pin	Function
ZN	((!A1)&(!A2)&(!A3))

TRUTH TABLE FOR ZN

A1	A2	A3	ZN
0	0	0	1
1	?	?	0
?	1	?	0
?	?	1	0

FUNCTIONAL SCHEMATIC

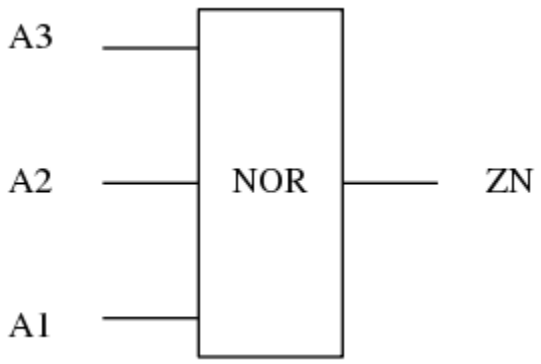

PIN CAPACITANCE (pf)

Pin	Type	Capacitance (pf)
A3	input	0.0124
A2	input	0.0118
A1	input	0.0114

DELAY AND OUTPUT TRANSITION TIME corresponding to min slew and load

Input Pin	Output	When Condition	Tin (ns)	Out Load (pf)	Delay (ns)	Tout (ns)
A3(LH)	ZN(HL)	!A1&!A2	0.0100	0.0010	0.0792	0.0536
A3(HL)	ZN(LH)	!A1&!A2	0.0100	0.0010	0.1736	0.0985
A2(HL)	ZN(LH)	!A1&!A3	0.0100	0.0010	0.1503	0.0982
A2(LH)	ZN(HL)	!A1&!A3	0.0100	0.0010	0.0743	0.0419
A1(HL)	ZN(LH)	!A2&!A3	0.0100	0.0010	0.0952	0.0924
A1(LH)	ZN(HL)	!A2&!A3	0.0100	0.0010	0.0518	0.0260

DYNAMIC ENERGY

Input Pin	When Condition	Tin (ns)	Output	Out Load (pf)	Energy (uW/MHz)
A1	!A2&!A3	0.0100	ZN(LH)	0.0010	0.3249
A2	!A1&!A3	0.0100	ZN(LH)	0.0010	0.4149
A3	!A1&!A2	0.0100	ZN(HL)	0.0010	0.1185
A1	!A2&!A3	0.0100	ZN(HL)	0.0010	-0.0241
A2	!A1&!A3	0.0100	ZN(HL)	0.0010	0.0517
A3	!A1&!A2	0.0100	ZN(LH)	0.0010	0.5020
A3(LH)	!A1&A2	0.0100	n/a	n/a	-0.1033
A3(LH)	A1&!A2	0.0100	n/a	n/a	-0.0988
A3(LH)	A1&A2	0.0100	n/a	n/a	-0.1127
A2(LH)	!A1&A3	0.0100	n/a	n/a	-0.0361
A2(LH)	A1&!A3	0.0100	n/a	n/a	-0.0991
A2(LH)	A1&A3	0.0100	n/a	n/a	-0.0877
A1(LH)	!A2&A3	0.0100	n/a	n/a	-0.0330
A1(LH)	A2&!A3	0.0100	n/a	n/a	-0.0339
A1(LH)	A2&A3	0.0100	n/a	n/a	-0.0339
A3(HL)	!A1&A2	0.0100	n/a	n/a	0.1191
A3(HL)	A1&!A2	0.0100	n/a	n/a	0.1190
A3(HL)	A1&A2	0.0100	n/a	n/a	0.1191
A2(HL)	!A1&A3	0.0100	n/a	n/a	0.0766
A2(HL)	A1&!A3	0.0100	n/a	n/a	0.1194
A2(HL)	A1&A3	0.0100	n/a	n/a	0.0709
A1(HL)	!A2&A3	0.0100	n/a	n/a	0.1552
A1(HL)	A2&!A3	0.0100	n/a	n/a	0.0807
A1(HL)	A2&A3	0.0100	n/a	n/a	0.0806

LEAKAGE POWER

When Condition	Power (nW)
!A1&!A2&!A3	0.2027
!A1&!A2&A3	0.2452
!A1&A2&!A3	0.1746
!A1&A2&A3	0.1746
A1&!A2&!A3	0.1037
A1&!A2&A3	0.1037
A1&A2&!A3	0.1037
A1&A2&A3	0.1037

gf180mcu_fd_sc_mcu9t5v0__nor3_4

gf180mcu_fd_sc_mcu9t5v0__nor3_4 symbol

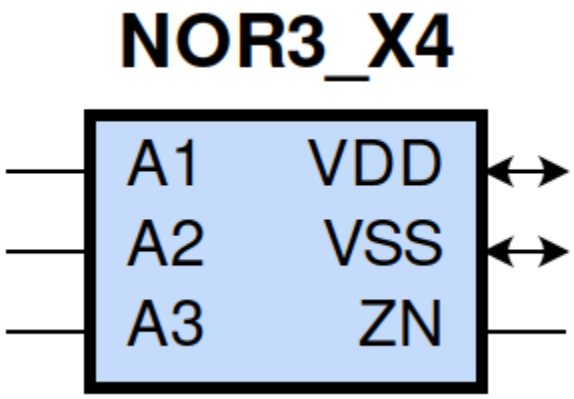

gf180mcu_fd_sc_mcu9t5v0__nor3_4 schematic

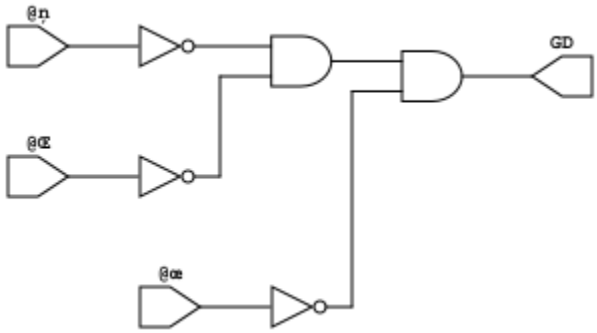

gf180mcu_fd_sc_mcu9t5v0__nor3_4 layout

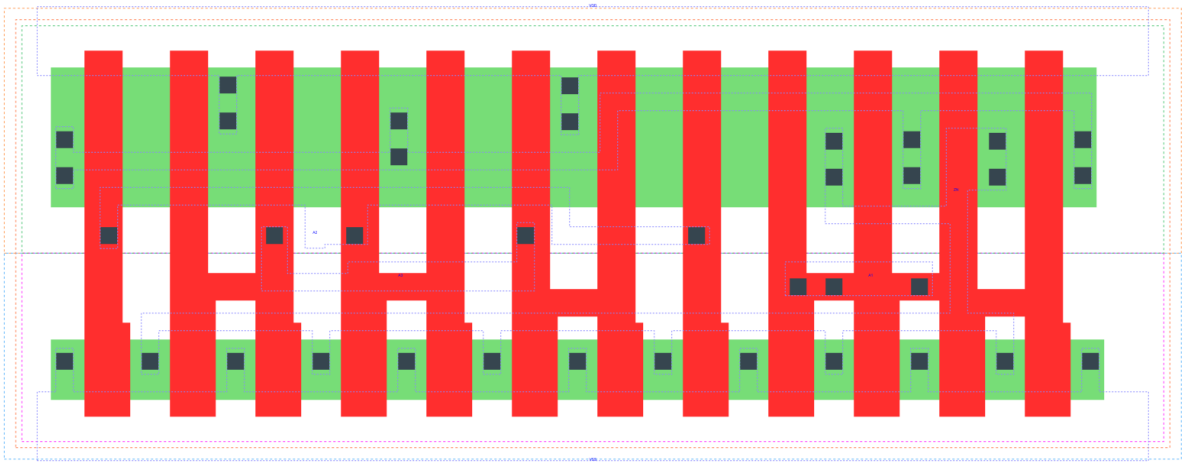

NOR3_X4 is a 3-input NOR with 4X drive strength

Attributes

Attribute	Value
area	73.382400 μm^2

OUTPUT FUNCTIONS

Output Pin	Function
ZN	((!A1)&(!A2)&(!A3))

TRUTH TABLE FOR ZN

A1	A2	A3	ZN
0	0	0	1
1	?	?	0
?	1	?	0
?	?	1	0

FUNCTIONAL SCHEMATIC

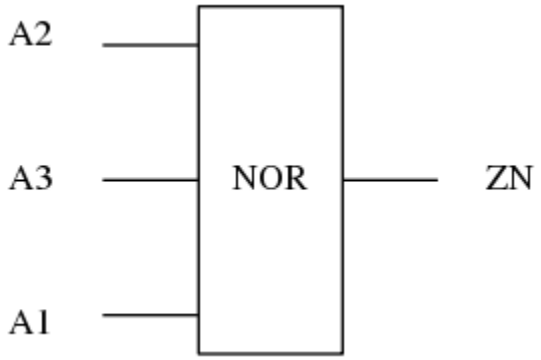

PIN CAPACITANCE (pf)

Pin	Type	Capacitance (pf)
A2	input	0.0235
A3	input	0.0225
A1	input	0.0231

DELAY AND OUTPUT TRANSITION TIME corresponding to min slew and load

Input Pin	Output	When Condition	Tin (ns)	Out Load (pf)	Delay (ns)	Tout (ns)
A2(HL)	ZN(LH)	!A1&!A3	0.0100	0.0010	0.1453	0.0896
A2(LH)	ZN(HL)	!A1&!A3	0.0100	0.0010	0.0709	0.0400
A3(LH)	ZN(HL)	!A1&!A2	0.0100	0.0010	0.0740	0.0507
A3(HL)	ZN(LH)	!A1&!A2	0.0100	0.0010	0.1689	0.0900
A1(HL)	ZN(LH)	!A2&!A3	0.0100	0.0010	0.0750	0.0766
A1(LH)	ZN(HL)	!A2&!A3	0.0100	0.0010	0.0459	0.0215

DYNAMIC ENERGY

Input Pin	When Condition	Tin (ns)	Output	Out Load (pf)	Energy (uW/MHz)
A1	!A2&!A3	0.0100	ZN(LH)	0.0010	0.5832
A2	!A1&!A3	0.0100	ZN(LH)	0.0010	0.8339
A3	!A1&!A2	0.0100	ZN(HL)	0.0010	0.2567
A1	!A2&!A3	0.0100	ZN(HL)	0.0010	-0.0531
A2	!A1&!A3	0.0100	ZN(HL)	0.0010	0.1226
A3	!A1&!A2	0.0100	ZN(LH)	0.0010	1.0081
A3(LH)	!A1&A2	0.0100	n/a	n/a	-0.2077
A3(LH)	A1&!A2	0.0100	n/a	n/a	-0.1960
A3(LH)	A1&A2	0.0100	n/a	n/a	-0.2223
A2(LH)	!A1&A3	0.0100	n/a	n/a	-0.0737
A2(LH)	A1&!A3	0.0100	n/a	n/a	-0.1873
A2(LH)	A1&A3	0.0100	n/a	n/a	-0.1636
A1(LH)	!A2&A3	0.0100	n/a	n/a	-0.0635
A1(LH)	A2&!A3	0.0100	n/a	n/a	-0.0625
A1(LH)	A2&A3	0.0100	n/a	n/a	-0.0625
A3(HL)	!A1&A2	0.0100	n/a	n/a	0.2384
A3(HL)	A1&!A2	0.0100	n/a	n/a	0.2377
A3(HL)	A1&A2	0.0100	n/a	n/a	0.2382
A2(HL)	!A1&A3	0.0100	n/a	n/a	0.1542
A2(HL)	A1&!A3	0.0100	n/a	n/a	0.2381
A2(HL)	A1&A3	0.0100	n/a	n/a	0.1326
A1(HL)	!A2&A3	0.0100	n/a	n/a	0.3302
A1(HL)	A2&!A3	0.0100	n/a	n/a	0.1792
A1(HL)	A2&A3	0.0100	n/a	n/a	0.1791

LEAKAGE POWER

When Condition	Power (nW)
!A1&!A2&!A3	0.3553
!A1&!A2&A3	0.4404
!A1&A2&!A3	0.2993
!A1&A2&A3	0.2993
A1&!A2&!A3	0.1574
A1&!A2&A3	0.1572
A1&A2&!A3	0.1572
A1&A2&A3	0.1572

gf180mcu_fd_sc_mcu9t5v0__nor4_1

gf180mcu_fd_sc_mcu9t5v0__nor4_1 symbol

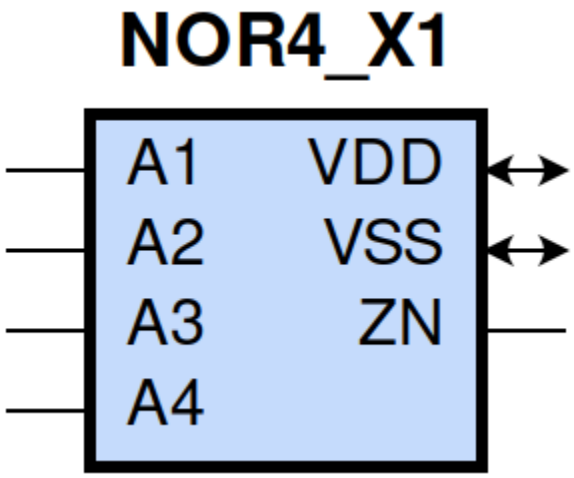

gf180mcu_fd_sc_mcu9t5v0__nor4_1 schematic

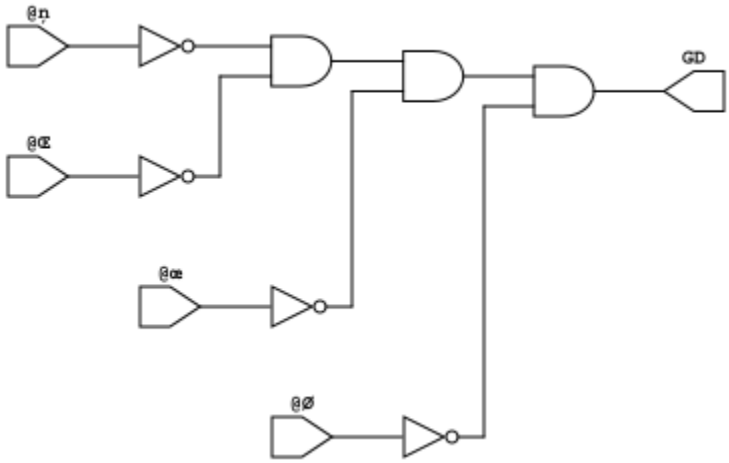

gf180mcu_fd_sc_mcu9t5v0__nor4_1 layout

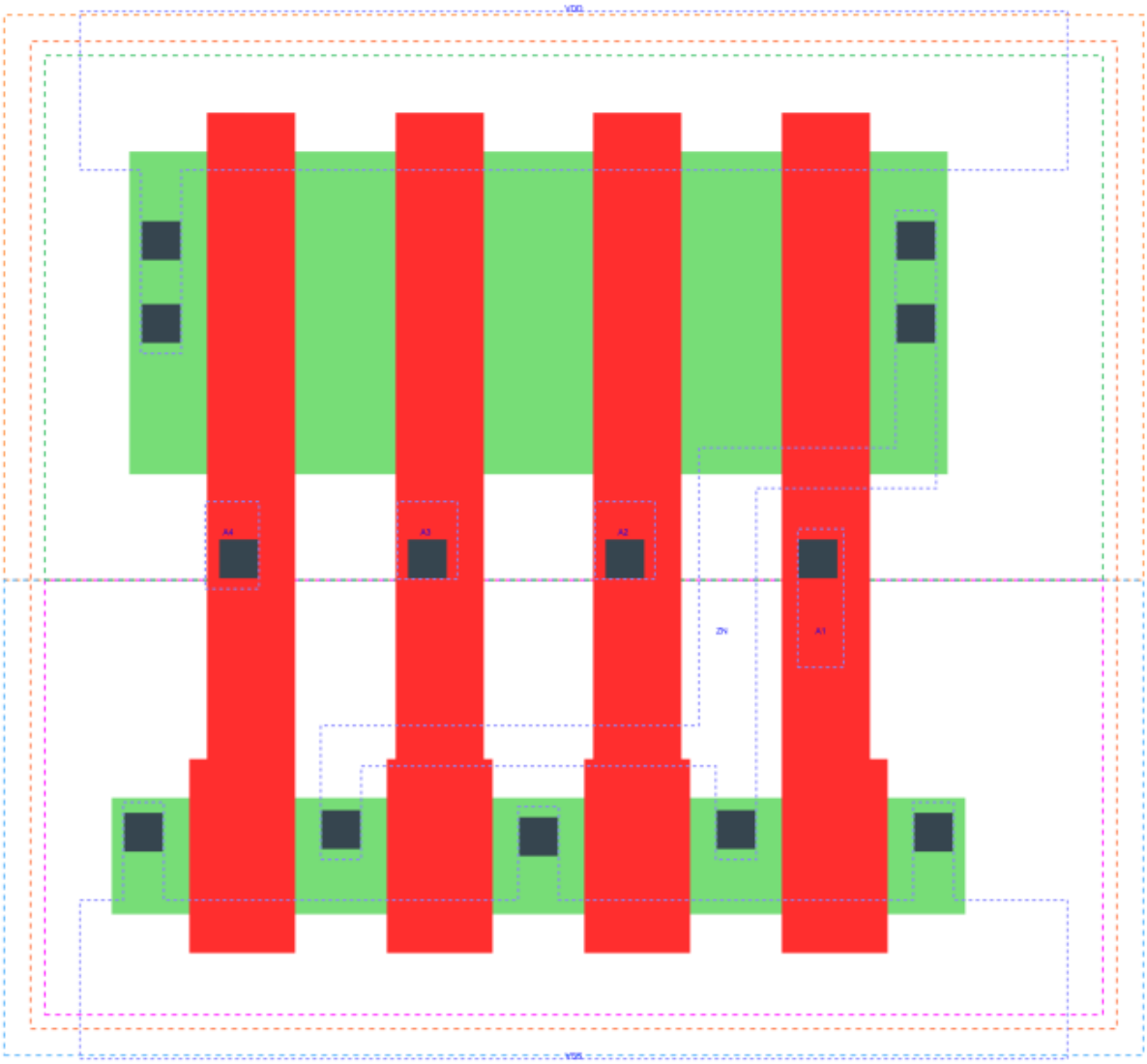

NOR4_X1 is a 4-input NOR with 1X drive strength

Attributes

Attribute	Value
area	28.224000 μm^2

OUTPUT FUNCTIONS

Output Pin	Function
ZN	((!A1)&(!A2)&(!A3)&(!A4))

TRUTH TABLE FOR ZN

A1	A2	A3	A4	ZN
0	0	0	0	1
1	?	?	?	0
?	1	?	?	0
?	?	1	?	0
?	?	?	1	0

FUNCTIONAL SCHEMATIC

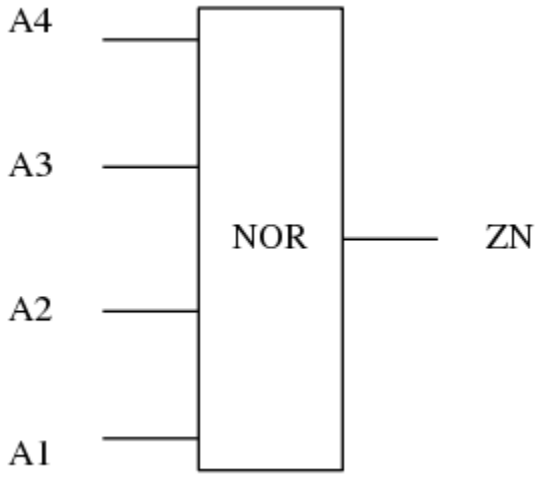

PIN CAPACITANCE (pf)

Pin	Type	Capacitance (pf)
A4	input	0.0052
A3	input	0.0052
A2	input	0.0053
A1	input	0.0057

DELAY AND OUTPUT TRANSITION TIME corresponding to min slew and load

Input Pin	Output	When Condition	Tin (ns)	Out Load (pf)	Delay (ns)	Tout (ns)
A4(LH)	ZN(HL)	!A1&!A2&!A3	0.0100	0.0010	0.1080	0.0822
A4(HL)	ZN(LH)	!A1&!A2&!A3	0.0100	0.0010	0.2839	0.1634
A3(LH)	ZN(HL)	!A1&!A2&!A4	0.0100	0.0010	0.1085	0.0727
A3(HL)	ZN(LH)	!A1&!A2&!A4	0.0100	0.0010	0.2611	0.1632
A2(HL)	ZN(LH)	!A1&!A3&!A4	0.0100	0.0010	0.2061	0.1614
A2(LH)	ZN(HL)	!A1&!A3&!A4	0.0100	0.0010	0.0961	0.0561
A1(HL)	ZN(LH)	!A2&!A3&!A4	0.0100	0.0010	0.1225	0.1449
A1(LH)	ZN(HL)	!A2&!A3&!A4	0.0100	0.0010	0.0679	0.0370

DYNAMIC ENERGY

Input Pin	When Condition	Tin (ns)	Output	Out Load (pf)	Energy (uW/MHz)
A1	!A2&!A3&!A4	0.0100	ZN(LH)	0.0010	0.1662
A4	!A1&!A2&!A3	0.0100	ZN(HL)	0.0010	0.1057
A2	!A1&!A3&!A4	0.0100	ZN(LH)	0.0010	0.2110
A3	!A1&!A2&!A4	0.0100	ZN(HL)	0.0010	0.0734
A1	!A2&!A3&!A4	0.0100	ZN(HL)	0.0010	-0.0007
A2	!A1&!A3&!A4	0.0100	ZN(HL)	0.0010	0.0364
A4	!A1&!A2&!A3	0.0100	ZN(LH)	0.0010	0.2980
A3	!A1&!A2&!A4	0.0100	ZN(LH)	0.0010	0.2546
A3(LH)	!A1&!A2&A4	0.0100	n/a	n/a	-0.0194
A3(LH)	!A1&A2&!A4	0.0100	n/a	n/a	-0.0515
A3(LH)	!A1&A2&A4	0.0100	n/a	n/a	-0.0463
A3(LH)	A1&!A2&!A4	0.0100	n/a	n/a	-0.0470
A3(LH)	A1&!A2&A4	0.0100	n/a	n/a	-0.0397
A3(LH)	A1&A2&!A4	0.0100	n/a	n/a	-0.0565
A3(LH)	A1&A2&A4	0.0100	n/a	n/a	-0.0529
A2(LH)	!A1&!A3&A4	0.0100	n/a	n/a	-0.0174
A2(LH)	!A1&A3&!A4	0.0100	n/a	n/a	-0.0180
A2(LH)	!A1&A3&A4	0.0100	n/a	n/a	-0.0180
A2(LH)	A1&!A3&!A4	0.0100	n/a	n/a	-0.0496
A2(LH)	A1&!A3&A4	0.0100	n/a	n/a	-0.0373
A2(LH)	A1&A3&!A4	0.0100	n/a	n/a	-0.0439
A2(LH)	A1&A3&A4	0.0100	n/a	n/a	-0.0419

continues on next page

Table 220 – continued from previous page

A1(LH)	!A2&!A3&A4	0.0100	n/a	n/a	-0.0166
A1(LH)	!A2&A3&!A4	0.0100	n/a	n/a	-0.0165
A1(LH)	!A2&A3&A4	0.0100	n/a	n/a	-0.0165
A1(LH)	A2&!A3&!A4	0.0100	n/a	n/a	-0.0169
A1(LH)	A2&!A3&A4	0.0100	n/a	n/a	-0.0169
A1(LH)	A2&A3&!A4	0.0100	n/a	n/a	-0.0169
A1(LH)	A2&A3&A4	0.0100	n/a	n/a	-0.0169
A3(HL)	!A1&!A2&A4	0.0100	n/a	n/a	0.0358
A3(HL)	!A1&A2&!A4	0.0100	n/a	n/a	0.0597
A3(HL)	!A1&A2&A4	0.0100	n/a	n/a	0.0354
A3(HL)	A1&!A2&!A4	0.0100	n/a	n/a	0.0597
A3(HL)	A1&!A2&A4	0.0100	n/a	n/a	0.0343
A3(HL)	A1&A2&!A4	0.0100	n/a	n/a	0.0597
A3(HL)	A1&A2&A4	0.0100	n/a	n/a	0.0354
A2(HL)	!A1&!A3&A4	0.0100	n/a	n/a	0.0750
A2(HL)	!A1&A3&!A4	0.0100	n/a	n/a	0.0389
A2(HL)	!A1&A3&A4	0.0100	n/a	n/a	0.0389
A2(HL)	A1&!A3&!A4	0.0100	n/a	n/a	0.0595
A2(HL)	A1&!A3&A4	0.0100	n/a	n/a	0.0344
A2(HL)	A1&A3&!A4	0.0100	n/a	n/a	0.0354
A2(HL)	A1&A3&A4	0.0100	n/a	n/a	0.0354
A4(LH)	!A1&!A2&A3	0.0100	n/a	n/a	-0.0529
A4(LH)	!A1&A2&!A3	0.0100	n/a	n/a	-0.0509
A4(LH)	!A1&A2&A3	0.0100	n/a	n/a	-0.0564
A4(LH)	A1&!A2&!A3	0.0100	n/a	n/a	-0.0497
A4(LH)	A1&!A2&A3	0.0100	n/a	n/a	-0.0555
A4(LH)	A1&A2&!A3	0.0100	n/a	n/a	-0.0512
A4(LH)	A1&A2&A3	0.0100	n/a	n/a	-0.0564
A1(HL)	!A2&!A3&A4	0.0100	n/a	n/a	0.1136
A1(HL)	!A2&A3&!A4	0.0100	n/a	n/a	0.0776
A1(HL)	!A2&A3&A4	0.0100	n/a	n/a	0.0776
A1(HL)	A2&!A3&!A4	0.0100	n/a	n/a	0.0397
A1(HL)	A2&!A3&A4	0.0100	n/a	n/a	0.0397
A1(HL)	A2&A3&!A4	0.0100	n/a	n/a	0.0397
A1(HL)	A2&A3&A4	0.0100	n/a	n/a	0.0397
A4(HL)	!A1&!A2&A3	0.0100	n/a	n/a	0.0596
A4(HL)	!A1&A2&!A3	0.0100	n/a	n/a	0.0596
A4(HL)	!A1&A2&A3	0.0100	n/a	n/a	0.0596
A4(HL)	A1&!A2&!A3	0.0100	n/a	n/a	0.0596
A4(HL)	A1&!A2&A3	0.0100	n/a	n/a	0.0596
A4(HL)	A1&A2&!A3	0.0100	n/a	n/a	0.0596
A4(HL)	A1&A2&A3	0.0100	n/a	n/a	0.0596

LEAKAGE POWER

When Condition	Power (nW)
!A1&!A2&!A3&!A4	0.1518
!A1&!A2&!A3&A4	0.1825
!A1&!A2&A3&!A4	0.1476
!A1&!A2&A3&A4	0.1476
!A1&A2&!A3&!A4	0.1123
!A1&A2&!A3&A4	0.1123
!A1&A2&A3&!A4	0.1123
!A1&A2&A3&A4	0.1123
A1&!A2&!A3&!A4	0.0769
A1&!A2&!A3&A4	0.0769
A1&!A2&A3&!A4	0.0769
A1&!A2&A3&A4	0.0769
A1&A2&!A3&!A4	0.0769
A1&A2&!A3&A4	0.0769
A1&A2&A3&!A4	0.0769
A1&A2&A3&A4	0.0769

gf180mcu_fd_sc_mcu9t5v0__nor4_2

gf180mcu_fd_sc_mcu9t5v0__nor4_2 symbol

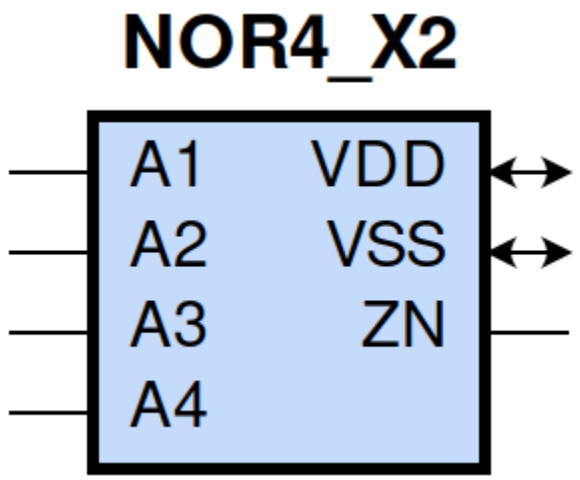

gf180mcu_fd_sc_mcu9t5v0__nor4_2 schematic

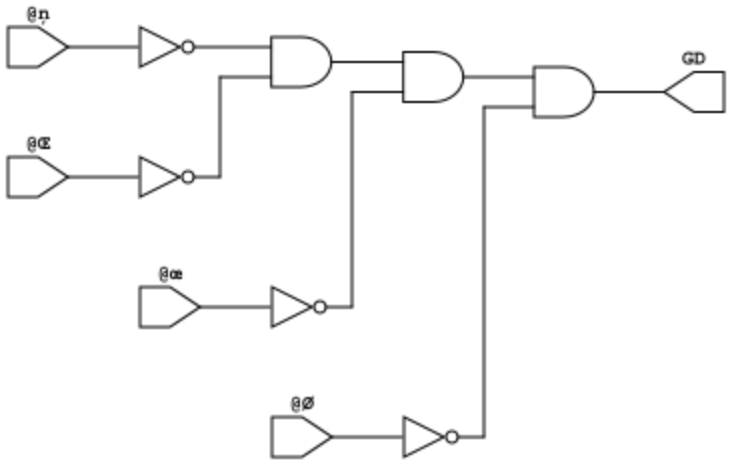

gf180mcu_fd_sc_mcu9t5v0__nor4_2 layout

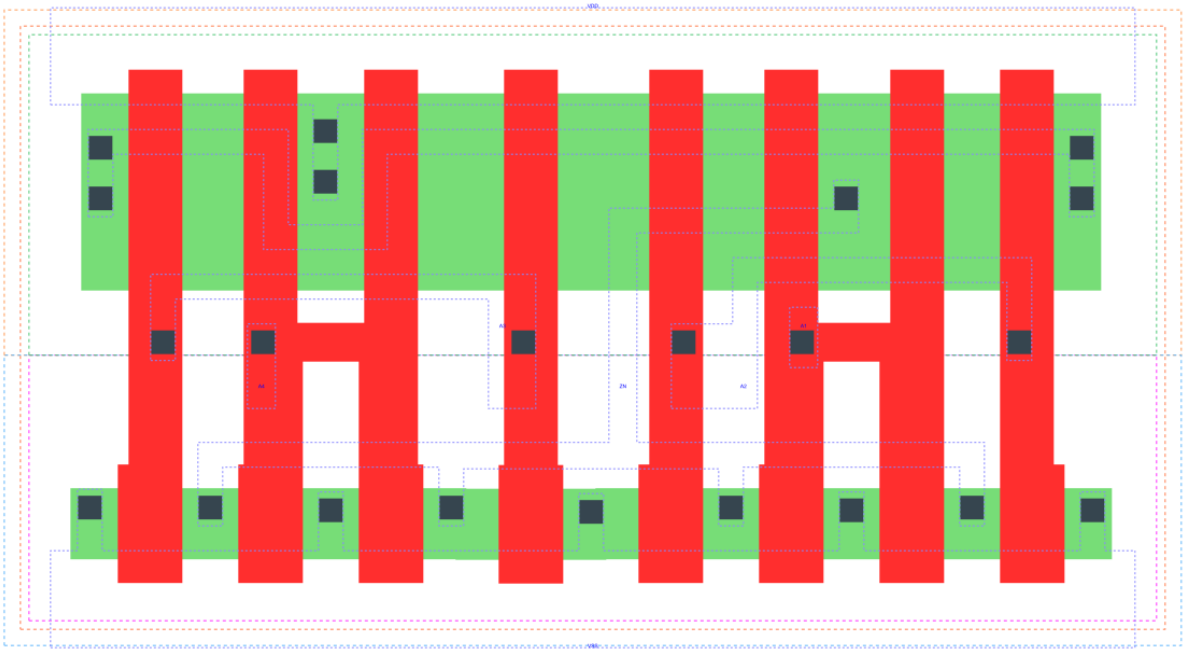

NOR4_X2 is a 4-input NOR with 2X drive strength

Attributes

Attribute	Value
area	50.803200 μm^2

OUTPUT FUNCTIONS

Output Pin	Function
ZN	((!A1)&(!A2)&(!A3)&(!A4))

TRUTH TABLE FOR ZN

A1	A2	A3	A4	ZN
0	0	0	0	1
1	?	?	?	0
?	1	?	?	0
?	?	1	?	0
?	?	?	1	0

FUNCTIONAL SCHEMATIC

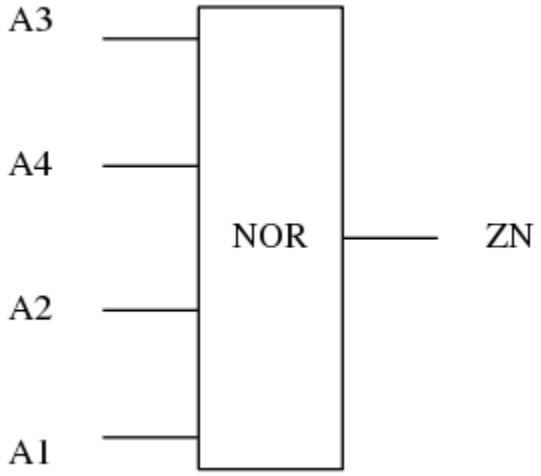

PIN CAPACITANCE (pf)

Pin	Type	Capacitance (pf)
A3	input	0.0110
A4	input	0.0104
A2	input	0.0113
A1	input	0.0111

DELAY AND OUTPUT TRANSITION TIME corresponding to min slew and load

Input Pin	Output	When Condition	Tin (ns)	Out Load (pf)	Delay (ns)	Tout (ns)
A3(LH)	ZN(HL)	!A1&!A2&!A4	0.0100	0.0010	0.1000	0.0694
A3(HL)	ZN(LH)	!A1&!A2&!A4	0.0100	0.0010	0.2578	0.1494
A4(LH)	ZN(HL)	!A1&!A2&!A3	0.0100	0.0010	0.0979	0.0769
A4(HL)	ZN(LH)	!A1&!A2&!A3	0.0100	0.0010	0.2819	0.1494
A2(HL)	ZN(LH)	!A1&!A3&!A4	0.0100	0.0010	0.1754	0.1422
A2(LH)	ZN(HL)	!A1&!A3&!A4	0.0100	0.0010	0.0872	0.0495
A1(HL)	ZN(LH)	!A2&!A3&!A4	0.0100	0.0010	0.0991	0.1162
A1(LH)	ZN(HL)	!A2&!A3&!A4	0.0100	0.0010	0.0599	0.0309

DYNAMIC ENERGY

Input Pin	When Condition	Tin (ns)	Output	Out Load (pf)	Energy (uW/MHz)
A1	!A2&!A3&!A4	0.0100	ZN(LH)	0.0010	0.3245
A4	!A1&!A2&!A3	0.0100	ZN(HL)	0.0010	0.2163
A2	!A1&!A3&!A4	0.0100	ZN(LH)	0.0010	0.4143
A3	!A1&!A2&!A4	0.0100	ZN(HL)	0.0010	0.1475
A1	!A2&!A3&!A4	0.0100	ZN(HL)	0.0010	-0.0223
A2	!A1&!A3&!A4	0.0100	ZN(HL)	0.0010	0.0503
A4	!A1&!A2&!A3	0.0100	ZN(LH)	0.0010	0.6377
A3	!A1&!A2&!A4	0.0100	ZN(LH)	0.0010	0.5506
A3(LH)	!A1&!A2&A4	0.0100	n/a	n/a	-0.0403
A3(LH)	!A1&A2&!A4	0.0100	n/a	n/a	-0.0966
A3(LH)	!A1&A2&A4	0.0100	n/a	n/a	-0.0842
A3(LH)	A1&!A2&!A4	0.0100	n/a	n/a	-0.0931
A3(LH)	A1&!A2&A4	0.0100	n/a	n/a	-0.0793
A3(LH)	A1&A2&!A4	0.0100	n/a	n/a	-0.1064
A3(LH)	A1&A2&A4	0.0100	n/a	n/a	-0.0975
A2(LH)	!A1&!A3&A4	0.0100	n/a	n/a	-0.0339
A2(LH)	!A1&A3&!A4	0.0100	n/a	n/a	-0.0339
A2(LH)	!A1&A3&A4	0.0100	n/a	n/a	-0.0339
A2(LH)	A1&!A3&!A4	0.0100	n/a	n/a	-0.0994
A2(LH)	A1&!A3&A4	0.0100	n/a	n/a	-0.0712
A2(LH)	A1&A3&!A4	0.0100	n/a	n/a	-0.0796
A2(LH)	A1&A3&A4	0.0100	n/a	n/a	-0.0758

continues on next page

Table 221 – continued from previous page

A1(LH)	!A2&!A3&A4	0.0100	n/a	n/a	-0.0321
A1(LH)	!A2&A3&!A4	0.0100	n/a	n/a	-0.0318
A1(LH)	!A2&A3&A4	0.0100	n/a	n/a	-0.0319
A1(LH)	A2&!A3&!A4	0.0100	n/a	n/a	-0.0337
A1(LH)	A2&!A3&A4	0.0100	n/a	n/a	-0.0337
A1(LH)	A2&A3&!A4	0.0100	n/a	n/a	-0.0337
A1(LH)	A2&A3&A4	0.0100	n/a	n/a	-0.0337
A3(HL)	!A1&!A2&A4	0.0100	n/a	n/a	0.0755
A3(HL)	!A1&A2&!A4	0.0100	n/a	n/a	0.1194
A3(HL)	!A1&A2&A4	0.0100	n/a	n/a	0.0677
A3(HL)	A1&!A2&!A4	0.0100	n/a	n/a	0.1196
A3(HL)	A1&!A2&A4	0.0100	n/a	n/a	0.0665
A3(HL)	A1&A2&!A4	0.0100	n/a	n/a	0.1194
A3(HL)	A1&A2&A4	0.0100	n/a	n/a	0.0677
A2(HL)	!A1&!A3&A4	0.0100	n/a	n/a	0.1750
A2(HL)	!A1&A3&!A4	0.0100	n/a	n/a	0.0975
A2(HL)	!A1&A3&A4	0.0100	n/a	n/a	0.0975
A2(HL)	A1&!A3&!A4	0.0100	n/a	n/a	0.1191
A2(HL)	A1&!A3&A4	0.0100	n/a	n/a	0.0665
A2(HL)	A1&A3&!A4	0.0100	n/a	n/a	0.0664
A2(HL)	A1&A3&A4	0.0100	n/a	n/a	0.0664
A4(LH)	!A1&!A2&A3	0.0100	n/a	n/a	-0.1067
A4(LH)	!A1&A2&!A3	0.0100	n/a	n/a	-0.0993
A4(LH)	!A1&A2&A3	0.0100	n/a	n/a	-0.1113
A4(LH)	A1&!A2&!A3	0.0100	n/a	n/a	-0.0980
A4(LH)	A1&!A2&A3	0.0100	n/a	n/a	-0.1105
A4(LH)	A1&A2&!A3	0.0100	n/a	n/a	-0.0994
A4(LH)	A1&A2&A3	0.0100	n/a	n/a	-0.1113
A1(HL)	!A2&!A3&A4	0.0100	n/a	n/a	0.2508
A1(HL)	!A2&A3&!A4	0.0100	n/a	n/a	0.1734
A1(HL)	!A2&A3&A4	0.0100	n/a	n/a	0.1734
A1(HL)	A2&!A3&!A4	0.0100	n/a	n/a	0.0782
A1(HL)	A2&!A3&A4	0.0100	n/a	n/a	0.0782
A1(HL)	A2&A3&!A4	0.0100	n/a	n/a	0.0782
A1(HL)	A2&A3&A4	0.0100	n/a	n/a	0.0782
A4(HL)	!A1&!A2&A3	0.0100	n/a	n/a	0.1192
A4(HL)	!A1&A2&!A3	0.0100	n/a	n/a	0.1193
A4(HL)	!A1&A2&A3	0.0100	n/a	n/a	0.1192
A4(HL)	A1&!A2&!A3	0.0100	n/a	n/a	0.1194
A4(HL)	A1&!A2&A3	0.0100	n/a	n/a	0.1192
A4(HL)	A1&A2&!A3	0.0100	n/a	n/a	0.1193
A4(HL)	A1&A2&A3	0.0100	n/a	n/a	0.1192

LEAKAGE POWER

When Condition	Power (nW)
!A1&!A2&!A3&!A4	0.2536
!A1&!A2&!A3&A4	0.3150
!A1&!A2&A3&!A4	0.2452
!A1&!A2&A3&A4	0.2452
!A1&A2&!A3&!A4	0.1746
!A1&A2&!A3&A4	0.1747
!A1&A2&A3&!A4	0.1747
!A1&A2&A3&A4	0.1747
A1&!A2&!A3&!A4	0.1037
A1&!A2&!A3&A4	0.1038
A1&!A2&A3&!A4	0.1038
A1&!A2&A3&A4	0.1038
A1&A2&!A3&!A4	0.1037
A1&A2&!A3&A4	0.1038
A1&A2&A3&!A4	0.1038
A1&A2&A3&A4	0.1038

gf180mcu_fd_sc_mcu9t5v0__nor4_4

gf180mcu_fd_sc_mcu9t5v0__nor4_4 symbol

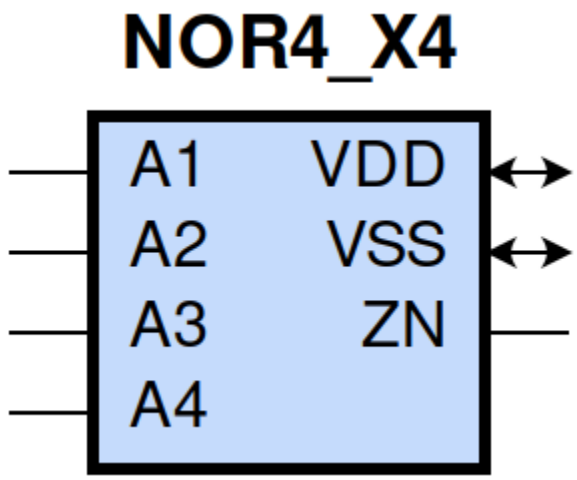

gf180mcu_fd_sc_mcu9t5v0__nor4_4 schematic

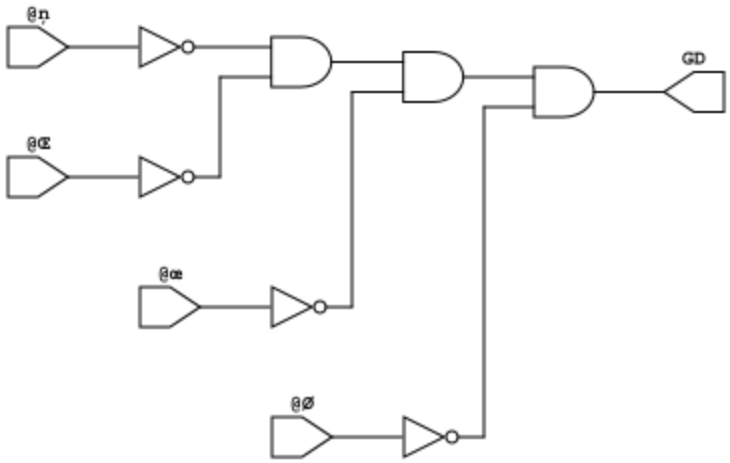

gf180mcu_fd_sc_mcu9t5v0__nor4_4 layout

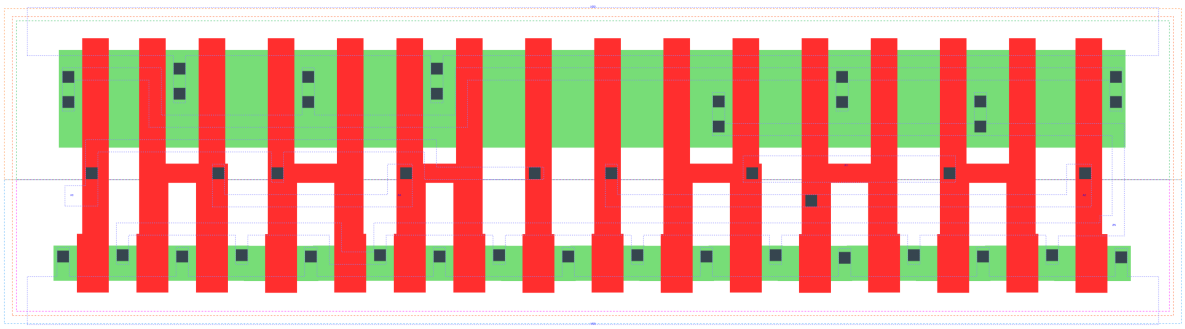

NOR4_X4 is a 4-input NOR with 4X drive strength

Attributes

Attribute	Value
area	107.251200 μm^2

OUTPUT FUNCTIONS

Output Pin	Function
ZN	((!A1)&(!A2)&(!A3)&(!A4))

TRUTH TABLE FOR ZN

A1	A2	A3	A4	ZN
0	0	0	0	1
1	?	?	?	0
?	1	?	?	0
?	?	1	?	0
?	?	?	1	0

FUNCTIONAL SCHEMATIC

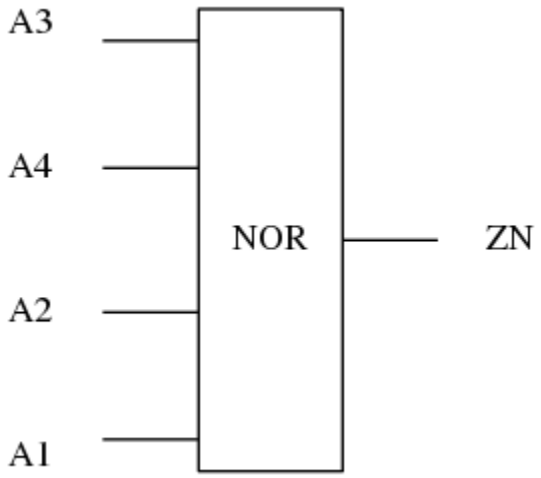

PIN CAPACITANCE (pf)

Pin	Type	Capacitance (pf)
A3	input	0.0222
A4	input	0.0212
A2	input	0.0227
A1	input	0.0229

DELAY AND OUTPUT TRANSITION TIME corresponding to min slew and load

Input Pin	Output	When Condition	Tin (ns)	Out Load (pf)	Delay (ns)	Tout (ns)
A3(LH)	ZN(HL)	!A1&!A2&!A4	0.0100	0.0010	0.1040	0.0724
A3(HL)	ZN(LH)	!A1&!A2&!A4	0.0100	0.0010	0.2662	0.1549
A4(LH)	ZN(HL)	!A1&!A2&!A3	0.0100	0.0010	0.1019	0.0799
A4(HL)	ZN(LH)	!A1&!A2&!A3	0.0100	0.0010	0.2904	0.1551
A2(HL)	ZN(LH)	!A1&!A3&!A4	0.0100	0.0010	0.1859	0.1495
A2(LH)	ZN(HL)	!A1&!A3&!A4	0.0100	0.0010	0.0910	0.0527
A1(HL)	ZN(LH)	!A2&!A3&!A4	0.0100	0.0010	0.1017	0.1218
A1(LH)	ZN(HL)	!A2&!A3&!A4	0.0100	0.0010	0.0618	0.0325

DYNAMIC ENERGY

Input Pin	When Condition	Tin (ns)	Output	Out Load (pf)	Energy (uW/MHz)
A1	!A2&!A3&!A4	0.0100	ZN(LH)	0.0010	0.6922
A4	!A1&!A2&!A3	0.0100	ZN(HL)	0.0010	0.4540
A2	!A1&!A3&!A4	0.0100	ZN(LH)	0.0010	0.8730
A3	!A1&!A2&!A4	0.0100	ZN(HL)	0.0010	0.3149
A1	!A2&!A3&!A4	0.0100	ZN(HL)	0.0010	-0.0359
A2	!A1&!A3&!A4	0.0100	ZN(HL)	0.0010	0.1343
A4	!A1&!A2&!A3	0.0100	ZN(LH)	0.0010	1.3179
A3	!A1&!A2&!A4	0.0100	ZN(LH)	0.0010	1.1449
A3(LH)	!A1&!A2&A4	0.0100	n/a	n/a	-0.0815
A3(LH)	!A1&A2&!A4	0.0100	n/a	n/a	-0.1925
A3(LH)	!A1&A2&A4	0.0100	n/a	n/a	-0.1704
A3(LH)	A1&!A2&!A4	0.0100	n/a	n/a	-0.1883
A3(LH)	A1&!A2&A4	0.0100	n/a	n/a	-0.1606
A3(LH)	A1&A2&!A4	0.0100	n/a	n/a	-0.2135
A3(LH)	A1&A2&A4	0.0100	n/a	n/a	-0.2006
A2(LH)	!A1&!A3&A4	0.0100	n/a	n/a	-0.0681
A2(LH)	!A1&A3&!A4	0.0100	n/a	n/a	-0.0672
A2(LH)	!A1&A3&A4	0.0100	n/a	n/a	-0.0672
A2(LH)	A1&!A3&!A4	0.0100	n/a	n/a	-0.1975
A2(LH)	A1&!A3&A4	0.0100	n/a	n/a	-0.1422
A2(LH)	A1&A3&!A4	0.0100	n/a	n/a	-0.1603
A2(LH)	A1&A3&A4	0.0100	n/a	n/a	-0.1525
A1(LH)	!A2&!A3&A4	0.0100	n/a	n/a	-0.0642
A1(LH)	!A2&A3&!A4	0.0100	n/a	n/a	-0.0636
A1(LH)	!A2&A3&A4	0.0100	n/a	n/a	-0.0636
A1(LH)	A2&!A3&!A4	0.0100	n/a	n/a	-0.0685
A1(LH)	A2&!A3&A4	0.0100	n/a	n/a	-0.0685
A1(LH)	A2&A3&!A4	0.0100	n/a	n/a	-0.0685
A1(LH)	A2&A3&A4	0.0100	n/a	n/a	-0.0685
A3(HL)	!A1&!A2&A4	0.0100	n/a	n/a	0.1516
A3(HL)	!A1&A2&!A4	0.0100	n/a	n/a	0.2370
A3(HL)	!A1&A2&A4	0.0100	n/a	n/a	0.1324
A3(HL)	A1&!A2&!A4	0.0100	n/a	n/a	0.2372
A3(HL)	A1&!A2&A4	0.0100	n/a	n/a	0.1345

continues on next page

Table 222 – continued from previous page

A3(HL)	A1&A2&!A4	0.0100	n/a	n/a	0.2370
A3(HL)	A1&A2&A4	0.0100	n/a	n/a	0.1324
A2(HL)	!A1&!A3&A4	0.0100	n/a	n/a	0.3393
A2(HL)	!A1&A3&!A4	0.0100	n/a	n/a	0.1833
A2(HL)	!A1&A3&A4	0.0100	n/a	n/a	0.1832
A2(HL)	A1&!A3&!A4	0.0100	n/a	n/a	0.2381
A2(HL)	A1&!A3&A4	0.0100	n/a	n/a	0.1344
A2(HL)	A1&A3&!A4	0.0100	n/a	n/a	0.1338
A2(HL)	A1&A3&A4	0.0100	n/a	n/a	0.1338
A4(LH)	!A1&!A2&A3	0.0100	n/a	n/a	-0.2142
A4(LH)	!A1&A2&!A3	0.0100	n/a	n/a	-0.1977
A4(LH)	!A1&A2&A3	0.0100	n/a	n/a	-0.2219
A4(LH)	A1&!A2&!A3	0.0100	n/a	n/a	-0.1964
A4(LH)	A1&!A2&A3	0.0100	n/a	n/a	-0.2212
A4(LH)	A1&A2&!A3	0.0100	n/a	n/a	-0.1977
A4(LH)	A1&A2&A3	0.0100	n/a	n/a	-0.2219
A1(HL)	!A2&!A3&A4	0.0100	n/a	n/a	0.5160
A1(HL)	!A2&A3&!A4	0.0100	n/a	n/a	0.3603
A1(HL)	!A2&A3&A4	0.0100	n/a	n/a	0.3601
A1(HL)	A2&!A3&!A4	0.0100	n/a	n/a	0.1806
A1(HL)	A2&!A3&A4	0.0100	n/a	n/a	0.1805
A1(HL)	A2&A3&!A4	0.0100	n/a	n/a	0.1804
A1(HL)	A2&A3&A4	0.0100	n/a	n/a	0.1804
A4(HL)	!A1&!A2&A3	0.0100	n/a	n/a	0.2381
A4(HL)	!A1&A2&!A3	0.0100	n/a	n/a	0.2366
A4(HL)	!A1&A2&A3	0.0100	n/a	n/a	0.2382
A4(HL)	A1&!A2&!A3	0.0100	n/a	n/a	0.2366
A4(HL)	A1&!A2&A3	0.0100	n/a	n/a	0.2382
A4(HL)	A1&A2&!A3	0.0100	n/a	n/a	0.2367
A4(HL)	A1&A2&A3	0.0100	n/a	n/a	0.2382

LEAKAGE POWER

When Condition	Power (nW)
!A1&!A2&!A3&!A4	0.4571
!A1&!A2&!A3&A4	0.5802
!A1&!A2&A3&!A4	0.4405
!A1&!A2&A3&A4	0.4405
!A1&A2&!A3&!A4	0.2993
!A1&A2&!A3&A4	0.2987
!A1&A2&A3&!A4	0.2987
!A1&A2&A3&A4	0.2987
A1&!A2&!A3&!A4	0.1574
A1&!A2&!A3&A4	0.1569
A1&!A2&A3&!A4	0.1569
A1&!A2&A3&A4	0.1569
A1&A2&!A3&!A4	0.1574
A1&A2&!A3&A4	0.1569
A1&A2&A3&!A4	0.1569
A1&A2&A3&A4	0.1569

gf180mcu_fd_sc_mcu9t5v0__oai21_1

gf180mcu_fd_sc_mcu9t5v0__oai21_1 symbol

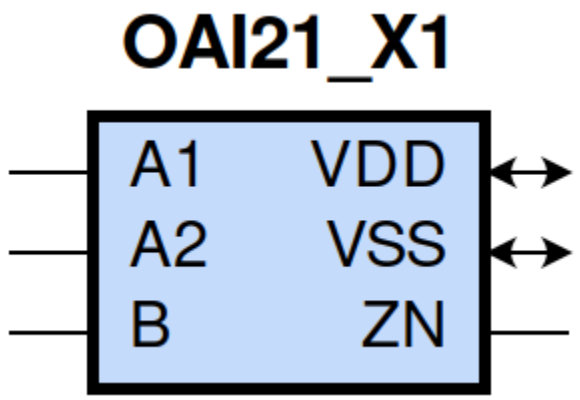

gf180mcu_fd_sc_mcu9t5v0__oai21_1 schematic

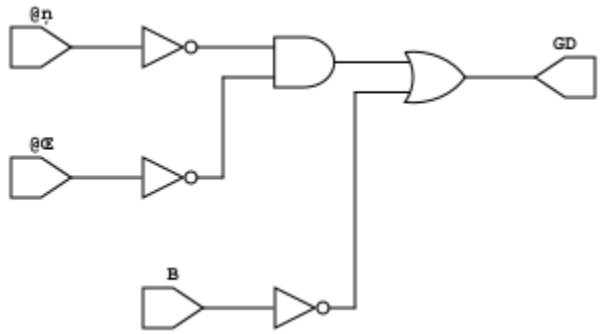

gf180mcu_fd_sc_mcu9t5v0__oai21_1 layout

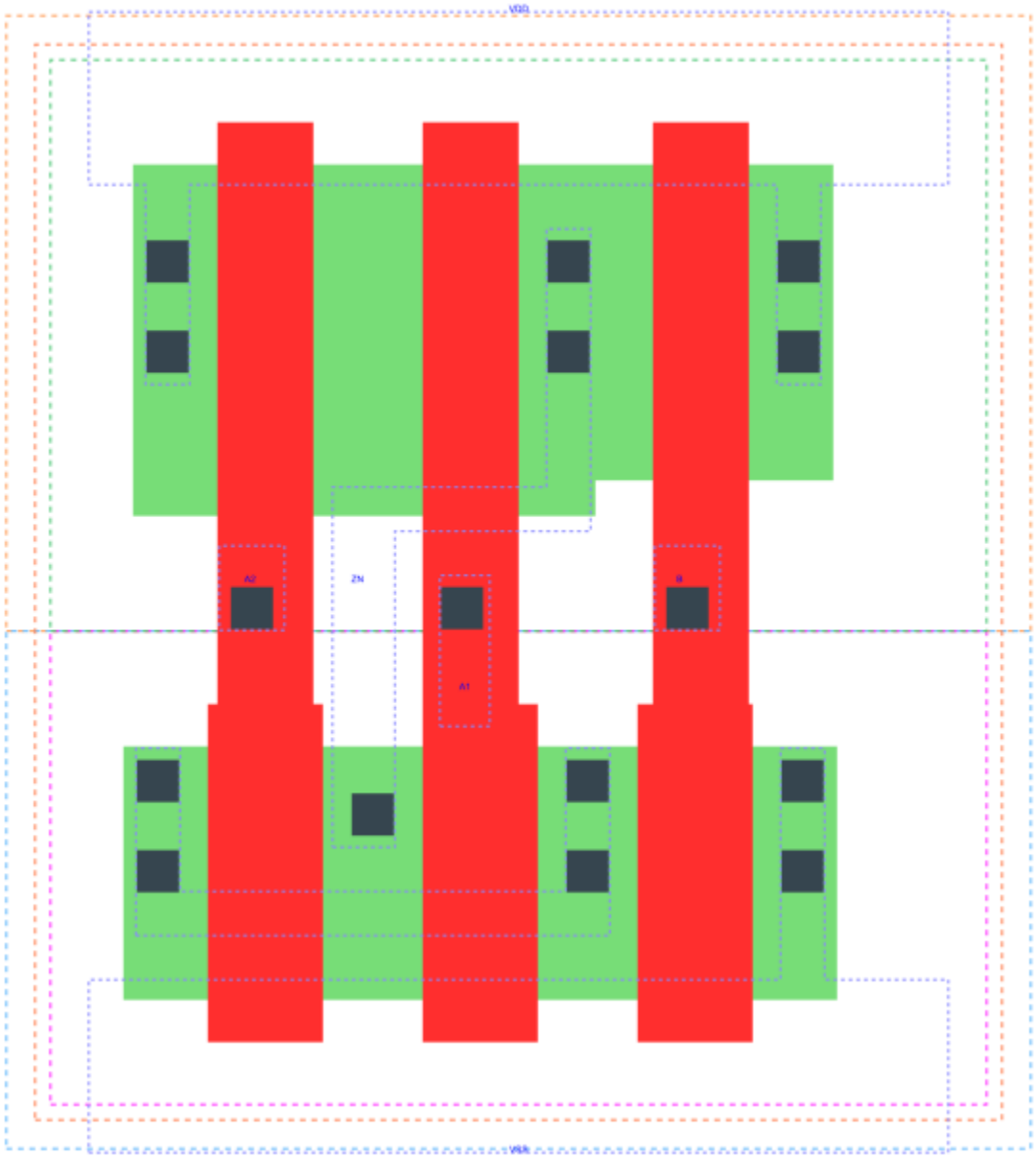

OAI21_X1 is a 2-input OR into 2-input NAND with 1X drive strength

Attributes

Attribute	Value
area	22.579200 μm^2

OUTPUT FUNCTIONS

Output Pin	Function
ZN	(((!A1)&(!A2))|(!B))

TRUTH TABLE FOR ZN

A1	A2	B	ZN
0	0	?	1
?	?	0	1
1	?	1	0
?	1	1	0

FUNCTIONAL SCHEMATIC

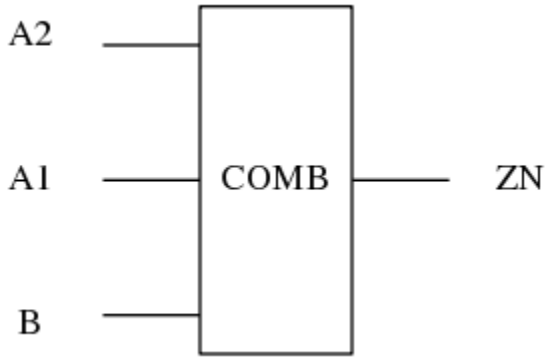

PIN CAPACITANCE (pf)

Pin	Type	Capacitance (pf)
A2	input	0.0066
A1	input	0.0070
B	input	0.0064

DELAY AND OUTPUT TRANSITION TIME corresponding to min slew and load

Input Pin	Output	When Condition	Tin (ns)	Out Load (pf)	Delay (ns)	Tout (ns)
A2(HL)	ZN(LH)	!A1&B	0.0100	0.0010	0.1196	0.0704
A2(LH)	ZN(HL)	!A1&B	0.0100	0.0010	0.0729	0.0465
A1(HL)	ZN(LH)	!A2&B	0.0100	0.0010	0.0956	0.0700
A1(LH)	ZN(HL)	!A2&B	0.0100	0.0010	0.0542	0.0310
B(LH)	ZN(HL)	!A1&A2	0.0100	0.0010	0.0957	0.0461
B(LH)	ZN(HL)	A1&!A2	0.0100	0.0010	0.0747	0.0315
B(LH)	ZN(HL)	A1&A2	0.0100	0.0010	0.0651	0.0308
B(HL)	ZN(LH)	!A1&A2	0.0100	0.0010	0.1030	0.0913
B(HL)	ZN(LH)	A1&!A2	0.0100	0.0010	0.0968	0.0681
B(HL)	ZN(LH)	A1&A2	0.0100	0.0010	0.1129	0.0793

DYNAMIC ENERGY

Input Pin	When Condition	Tin (ns)	Output	Out Load (pf)	Energy (uW/MHz)
A1	!A2&B	0.0100	ZN(LH)	0.0010	0.1655
B	!A1&A2	0.0100	ZN(HL)	0.0010	0.0475
B	A1&!A2	0.0100	ZN(HL)	0.0010	0.0097
B	A1&A2	0.0100	ZN(HL)	0.0010	0.0098
A2	!A1&B	0.0100	ZN(LH)	0.0010	0.2102
A1	!A2&B	0.0100	ZN(HL)	0.0010	0.0098
B	!A1&A2	0.0100	ZN(LH)	0.0010	0.3149
B	A1&!A2	0.0100	ZN(LH)	0.0010	0.2704
B	A1&A2	0.0100	ZN(LH)	0.0010	0.3065
A2	!A1&B	0.0100	ZN(HL)	0.0010	0.0429
B(HL)	!A1&!A2	0.0100	n/a	n/a	0.0621
A2(LH)	!A1&!B	0.0100	n/a	n/a	0.0041
A2(LH)	A1&!B	0.0100	n/a	n/a	-0.0649
A2(LH)	A1&B	0.0100	n/a	n/a	-0.0498
A1(LH)	!A2&!B	0.0100	n/a	n/a	0.0036
A1(LH)	A2&!B	0.0100	n/a	n/a	-0.0657
A1(LH)	A2&B	0.0100	n/a	n/a	-0.0169
A2(HL)	!A1&!B	0.0100	n/a	n/a	0.0670
A2(HL)	A1&!B	0.0100	n/a	n/a	0.0705
A2(HL)	A1&B	0.0100	n/a	n/a	0.0596
B(LH)	!A1&!A2	0.0100	n/a	n/a	-0.0539
A1(HL)	!A2&!B	0.0100	n/a	n/a	0.0674
A1(HL)	A2&!B	0.0100	n/a	n/a	0.0707
A1(HL)	A2&B	0.0100	n/a	n/a	0.0397

LEAKAGE POWER

When Condition	Power (nW)
!A1&!A2&!B	0.1004
!A1&!A2&B	0.1012
!A1&A2&!B	0.1602
A1&!A2&!B	0.1602
A1&A2&!B	0.1605
!A1&A2&B	0.1391
A1&!A2&B	0.1036
A1&A2&B	0.1036

gf180mcu_fd_sc_mcu9t5v0__oai21_2

gf180mcu_fd_sc_mcu9t5v0__oai21_2 symbol

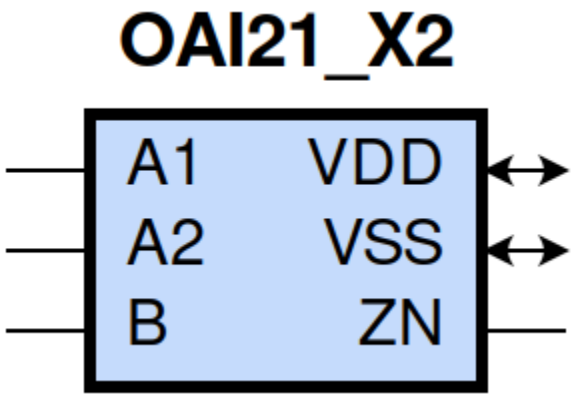

gf180mcu_fd_sc_mcu9t5v0__oai21_2 schematic

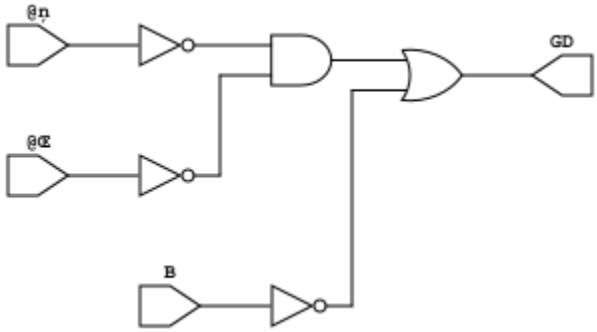

gf180mcu_fd_sc_mcu9t5v0__oai21_2 layout

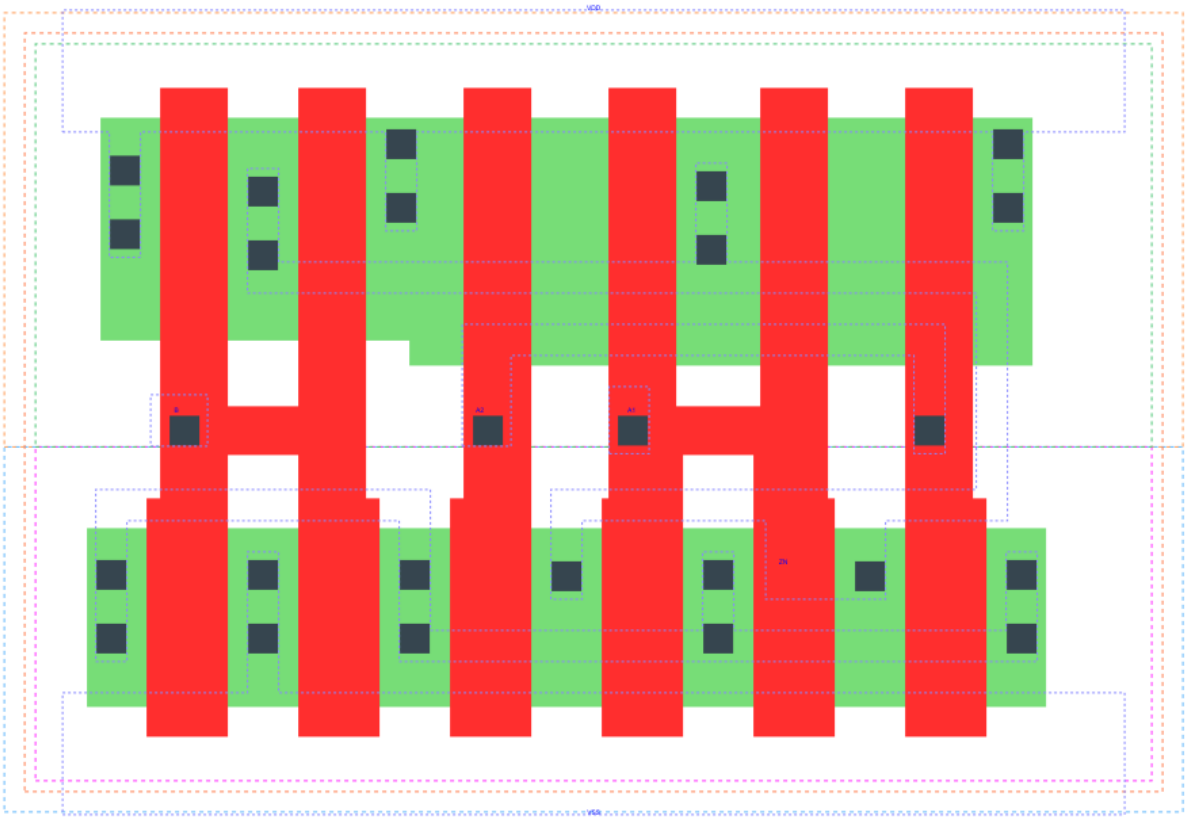

OAI21_X2 is a 2-input OR into 2-input NAND with 2X drive strength

Attributes

Attribute	Value
area	39.513600 μm^2

OUTPUT FUNCTIONS

Output Pin	Function
ZN	(((!A1)&(!A2))|(!B))

TRUTH TABLE FOR ZN

A1	A2	B	ZN
0	0	?	1
?	?	0	1
1	?	1	0
?	1	1	0

FUNCTIONAL SCHEMATIC

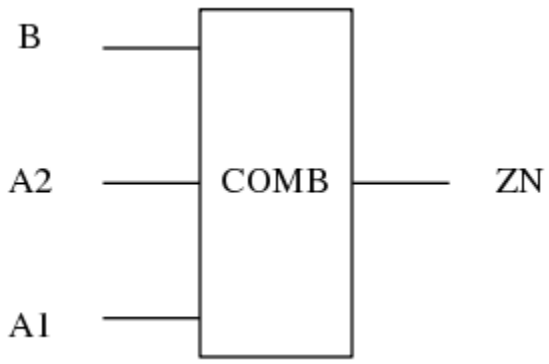

PIN CAPACITANCE (pf)

Pin	Type	Capacitance (pf)
B	input	0.0127
A2	input	0.0139
A1	input	0.0135

DELAY AND OUTPUT TRANSITION TIME corresponding to min slew and load

Input Pin	Output	When Condition	Tin (ns)	Out Load (pf)	Delay (ns)	Tout (ns)
B(LH)	ZN(HL)	!A1&A2	0.0100	0.0010	0.0942	0.0443
B(LH)	ZN(HL)	A1&!A2	0.0100	0.0010	0.0733	0.0301
B(LH)	ZN(HL)	A1&A2	0.0100	0.0010	0.0641	0.0298
B(HL)	ZN(LH)	!A1&A2	0.0100	0.0010	0.1015	0.0900
B(HL)	ZN(LH)	A1&!A2	0.0100	0.0010	0.0955	0.0667
B(HL)	ZN(LH)	A1&A2	0.0100	0.0010	0.1116	0.0779
A2(HL)	ZN(LH)	!A1&B	0.0100	0.0010	0.1154	0.0669
A2(LH)	ZN(HL)	!A1&B	0.0100	0.0010	0.0705	0.0448
A1(HL)	ZN(LH)	!A2&B	0.0100	0.0010	0.0918	0.0664
A1(LH)	ZN(HL)	!A2&B	0.0100	0.0010	0.0521	0.0295

DYNAMIC ENERGY

Input Pin	When Condition	Tin (ns)	Output	Out Load (pf)	Energy (uW/MHz)
A1	!A2&B	0.0100	ZN(LH)	0.0010	0.3472
B	!A1&A2	0.0100	ZN(HL)	0.0010	0.0848
B	A1&!A2	0.0100	ZN(HL)	0.0010	0.0090
B	A1&A2	0.0100	ZN(HL)	0.0010	0.0093
A2	!A1&B	0.0100	ZN(LH)	0.0010	0.4357
A1	!A2&B	0.0100	ZN(HL)	0.0010	0.0092
B	!A1&A2	0.0100	ZN(LH)	0.0010	0.6530
B	A1&!A2	0.0100	ZN(LH)	0.0010	0.5643
B	A1&A2	0.0100	ZN(LH)	0.0010	0.6367
A2	!A1&B	0.0100	ZN(HL)	0.0010	0.0758
B(HL)	!A1&!A2	0.0100	n/a	n/a	0.1242
A2(LH)	!A1&!B	0.0100	n/a	n/a	0.0147
A2(LH)	A1&!B	0.0100	n/a	n/a	-0.1299
A2(LH)	A1&B	0.0100	n/a	n/a	-0.0995
A1(LH)	!A2&!B	0.0100	n/a	n/a	0.0136
A1(LH)	A2&!B	0.0100	n/a	n/a	-0.1315
A1(LH)	A2&B	0.0100	n/a	n/a	-0.0338
A2(HL)	!A1&!B	0.0100	n/a	n/a	0.1340
A2(HL)	A1&!B	0.0100	n/a	n/a	0.1406
A2(HL)	A1&B	0.0100	n/a	n/a	0.1189
B(LH)	!A1&!A2	0.0100	n/a	n/a	-0.1073
A1(HL)	!A2&!B	0.0100	n/a	n/a	0.1344
A1(HL)	A2&!B	0.0100	n/a	n/a	0.1406
A1(HL)	A2&B	0.0100	n/a	n/a	0.0794

LEAKAGE POWER

When Condition	Power (nW)
!A1&!A2&!B	0.1509
!A1&!A2&B	0.1523
!A1&A2&!B	0.2703
A1&!A2&!B	0.2703
A1&A2&!B	0.2709
!A1&A2&B	0.2281
A1&!A2&B	0.1572
A1&A2&B	0.1572

gf180mcu_fd_sc_mcu9t5v0__oai21_4

gf180mcu_fd_sc_mcu9t5v0__oai21_4 symbol

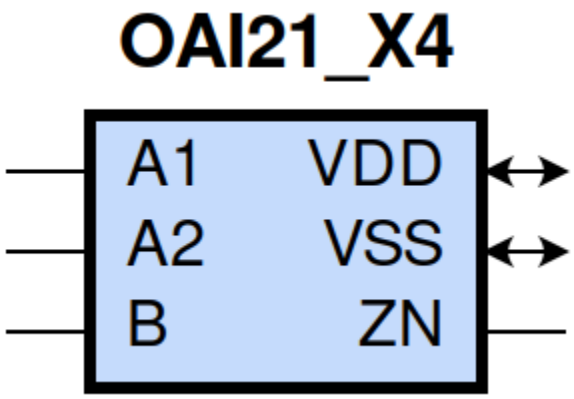

gf180mcu_fd_sc_mcu9t5v0__oai21_4 schematic

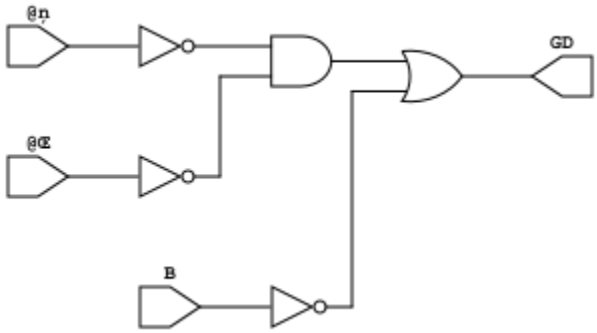

gf180mcu_fd_sc_mcu9t5v0__oai21_4 layout

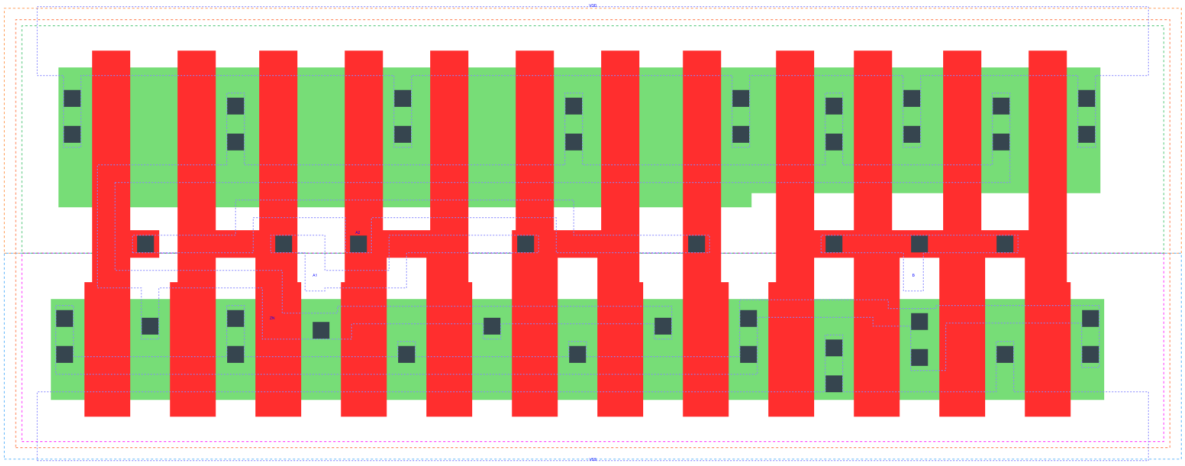

OAI21_X4 is a 2-input OR into 2-input NAND with 4X drive strength

Attributes

Attribute	Value
area	73.382400 μm^2

OUTPUT FUNCTIONS

Output Pin	Function
ZN	(((!A1)&(!A2))|(!B))

TRUTH TABLE FOR ZN

A1	A2	B	ZN
0	0	?	1
?	?	0	1
1	?	1	0
?	1	1	0

FUNCTIONAL SCHEMATIC

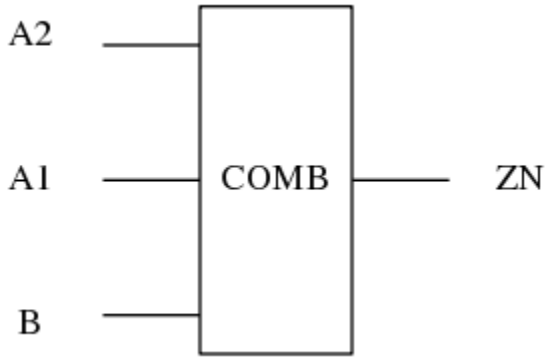

PIN CAPACITANCE (pf)

Pin	Type	Capacitance (pf)
A2	input	0.0280
A1	input	0.0279
B	input	0.0255

DELAY AND OUTPUT TRANSITION TIME corresponding to min slew and load

Input Pin	Output	When Condition	Tin (ns)	Out Load (pf)	Delay (ns)	Tout (ns)
A2(HL)	ZN(LH)	!A1&B	0.0100	0.0010	0.1128	0.0644
A2(LH)	ZN(HL)	!A1&B	0.0100	0.0010	0.0695	0.0438
A1(HL)	ZN(LH)	!A2&B	0.0100	0.0010	0.0887	0.0639
A1(LH)	ZN(HL)	!A2&B	0.0100	0.0010	0.0509	0.0283
B(LH)	ZN(HL)	!A1&A2	0.0100	0.0010	0.0916	0.0433
B(LH)	ZN(HL)	A1&!A2	0.0100	0.0010	0.0707	0.0287
B(LH)	ZN(HL)	A1&A2	0.0100	0.0010	0.0619	0.0287
B(HL)	ZN(LH)	!A1&A2	0.0100	0.0010	0.0977	0.0869
B(HL)	ZN(LH)	A1&!A2	0.0100	0.0010	0.0916	0.0634
B(HL)	ZN(LH)	A1&A2	0.0100	0.0010	0.1075	0.0745

DYNAMIC ENERGY

Input Pin	When Condition	Tin (ns)	Output	Out Load (pf)	Energy (uW/MHz)
A1	!A2&B	0.0100	ZN(LH)	0.0010	0.6908
B	!A1&A2	0.0100	ZN(HL)	0.0010	0.1745
B	A1&!A2	0.0100	ZN(HL)	0.0010	0.0188
B	A1&A2	0.0100	ZN(HL)	0.0010	0.0194
A2	!A1&B	0.0100	ZN(LH)	0.0010	0.8693
A1	!A2&B	0.0100	ZN(HL)	0.0010	0.0189
B	!A1&A2	0.0100	ZN(LH)	0.0010	1.2788
B	A1&!A2	0.0100	ZN(LH)	0.0010	1.1000
B	A1&A2	0.0100	ZN(LH)	0.0010	1.2440
A2	!A1&B	0.0100	ZN(HL)	0.0010	0.1567
B(HL)	!A1&!A2	0.0100	n/a	n/a	0.2488
A2(LH)	!A1&!B	0.0100	n/a	n/a	0.0038
A2(LH)	A1&!B	0.0100	n/a	n/a	-0.2599
A2(LH)	A1&B	0.0100	n/a	n/a	-0.1989
A1(LH)	!A2&!B	0.0100	n/a	n/a	0.0021
A1(LH)	A2&!B	0.0100	n/a	n/a	-0.2625
A1(LH)	A2&B	0.0100	n/a	n/a	-0.0674
A2(HL)	!A1&!B	0.0100	n/a	n/a	0.2675
A2(HL)	A1&!B	0.0100	n/a	n/a	0.2826
A2(HL)	A1&B	0.0100	n/a	n/a	0.2381
B(LH)	!A1&!A2	0.0100	n/a	n/a	-0.2144
A1(HL)	!A2&!B	0.0100	n/a	n/a	0.2686
A1(HL)	A2&!B	0.0100	n/a	n/a	0.2827
A1(HL)	A2&B	0.0100	n/a	n/a	0.1624

LEAKAGE POWER

When Condition	Power (nW)
!A1&!A2&!B	0.2517
!A1&!A2&B	0.2547
!A1&A2&!B	0.4886
A1&!A2&!B	0.4886
A1&A2&!B	0.4898
!A1&A2&B	0.4062
A1&!A2&B	0.2644
A1&A2&B	0.2644

gf180mcu_fd_sc_mcu9t5v0__oai211_1

gf180mcu_fd_sc_mcu9t5v0__oai211_1 symbol

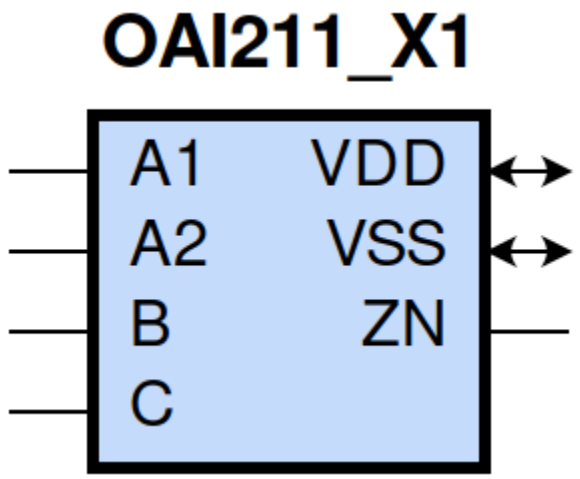

gf180mcu_fd_sc_mcu9t5v0__oai211_1 schematic

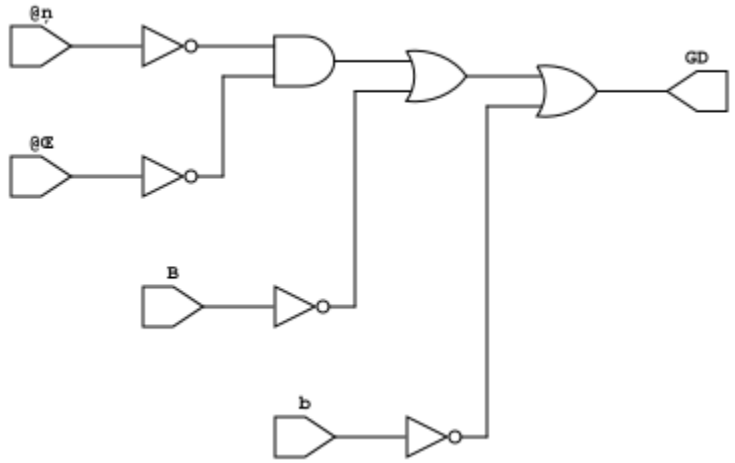

gf180mcu_fd_sc_mcu9t5v0__oai211_1 layout

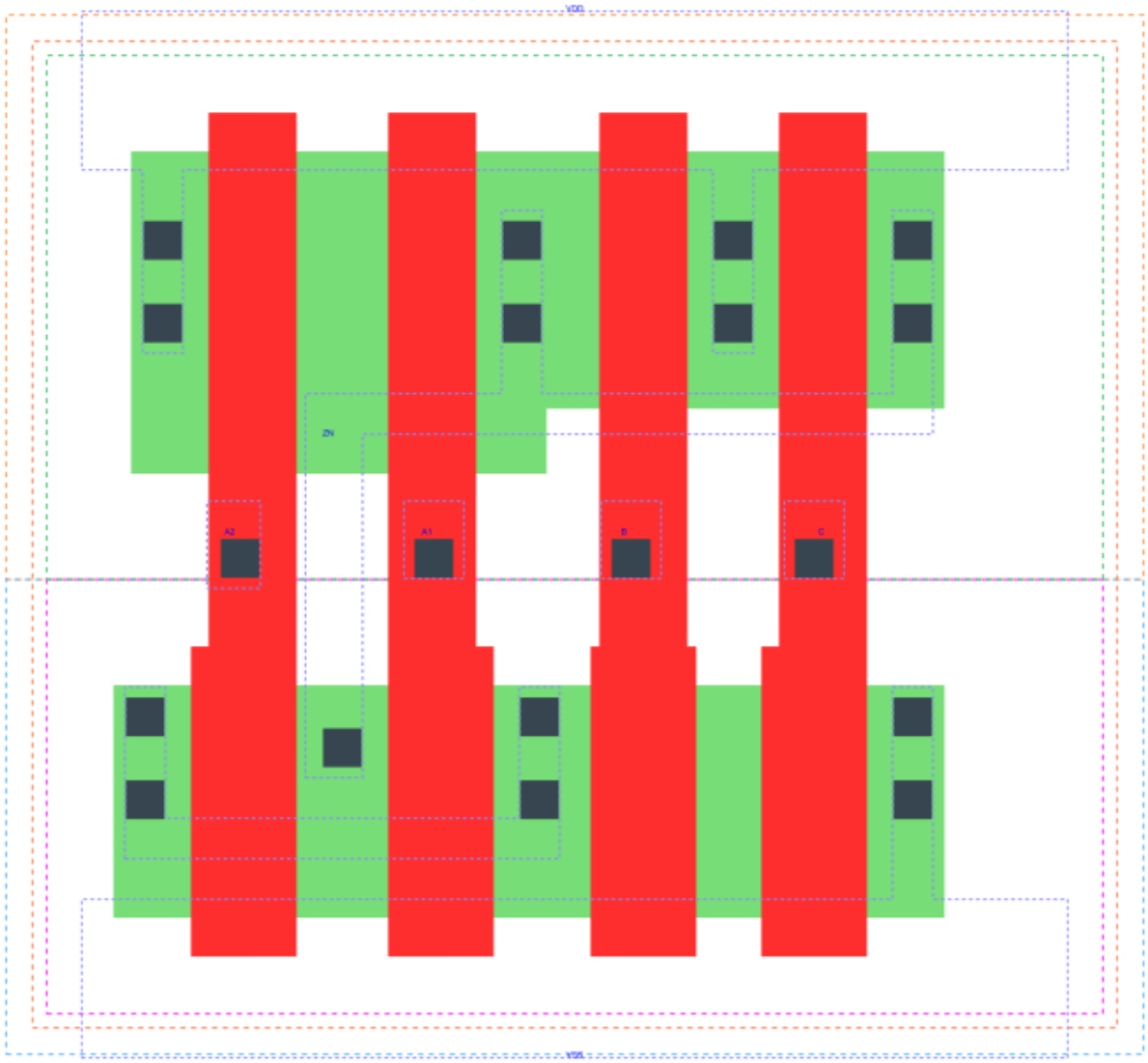

OAI211_X1 is a 2-input OR into 3-input NAND with 1X drive strength

Attributes

Attribute	Value
area	28.224000 μm^2

OUTPUT FUNCTIONS

Output Pin	Function
ZN	(((!A1)&(!A2))|(!B)|(!C))

TRUTH TABLE FOR ZN

A1	A2	B	C	ZN
0	0	?	?	1
?	?	0	?	1
?	?	?	0	1
1	?	1	1	0
?	1	1	1	0

FUNCTIONAL SCHEMATIC

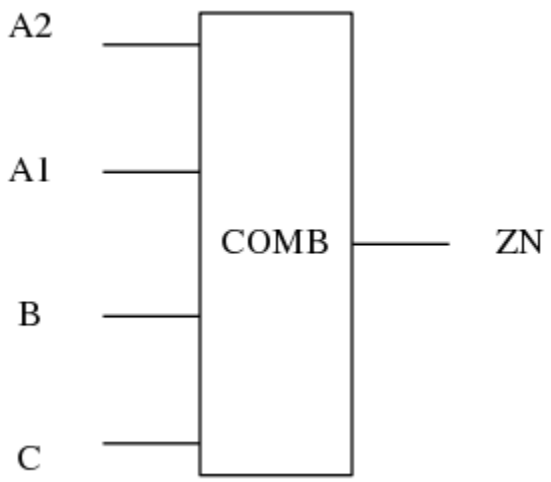

PIN CAPACITANCE (pf)

Pin	Type	Capacitance (pf)
A2	input	0.0066
A1	input	0.0069
B	input	0.0061
C	input	0.0060

DELAY AND OUTPUT TRANSITION TIME corresponding to min slew and load

Input Pin	Output	When Condition	Tin (ns)	Out Load (pf)	Delay (ns)	Tout (ns)
A2(HL)	ZN(LH)	!A1&B&C	0.0100	0.0010	0.1399	0.0873
A2(LH)	ZN(HL)	!A1&B&C	0.0100	0.0010	0.1041	0.0780
A1(HL)	ZN(LH)	!A2&B&C	0.0100	0.0010	0.1163	0.0871
A1(LH)	ZN(HL)	!A2&B&C	0.0100	0.0010	0.0772	0.0557
B(LH)	ZN(HL)	!A1&A2&C	0.0100	0.0010	0.1407	0.0783
B(LH)	ZN(HL)	A1&!A2&C	0.0100	0.0010	0.1105	0.0572
B(LH)	ZN(HL)	A1&A2&C	0.0100	0.0010	0.0984	0.0609
B(HL)	ZN(LH)	!A1&A2&C	0.0100	0.0010	0.1336	0.1160
B(HL)	ZN(LH)	A1&!A2&C	0.0100	0.0010	0.1267	0.0891
B(HL)	ZN(LH)	A1&A2&C	0.0100	0.0010	0.1440	0.1015
C(HL)	ZN(LH)	!A1&A2&B	0.0100	0.0010	0.1508	0.1360
C(HL)	ZN(LH)	A1&!A2&B	0.0100	0.0010	0.1426	0.1066
C(HL)	ZN(LH)	A1&A2&B	0.0100	0.0010	0.1625	0.1199
C(LH)	ZN(HL)	!A1&A2&B	0.0100	0.0010	0.1515	0.0783
C(LH)	ZN(HL)	A1&!A2&B	0.0100	0.0010	0.1214	0.0572
C(LH)	ZN(HL)	A1&A2&B	0.0100	0.0010	0.1093	0.0609

DYNAMIC ENERGY

Input Pin	When Condition	Tin (ns)	Output	Out Load (pf)	Energy (uW/MHz)
C	!A1&A2&B	0.0100	ZN(LH)	0.0010	0.3918
C	A1&!A2&B	0.0100	ZN(LH)	0.0010	0.3472
C	A1&A2&B	0.0100	ZN(LH)	0.0010	0.3824
C	!A1&A2&B	0.0100	ZN(HL)	0.0010	0.0741
C	A1&!A2&B	0.0100	ZN(HL)	0.0010	0.0379
C	A1&A2&B	0.0100	ZN(HL)	0.0010	0.0379
A1	!A2&B&C	0.0100	ZN(LH)	0.0010	0.1884
B	!A1&A2&C	0.0100	ZN(HL)	0.0010	0.0741
B	A1&!A2&C	0.0100	ZN(HL)	0.0010	0.0378
B	A1&A2&C	0.0100	ZN(HL)	0.0010	0.0378
A2	!A1&B&C	0.0100	ZN(LH)	0.0010	0.2332
A1	!A2&B&C	0.0100	ZN(HL)	0.0010	0.0343
B	!A1&A2&C	0.0100	ZN(LH)	0.0010	0.3363
B	A1&!A2&C	0.0100	ZN(LH)	0.0010	0.2922
B	A1&A2&C	0.0100	ZN(LH)	0.0010	0.3282
A2	!A1&B&C	0.0100	ZN(HL)	0.0010	0.0654
B(HL)	!A1&!A2&!C	0.0100	n/a	n/a	0.0761
B(HL)	!A1&!A2&C	0.0100	n/a	n/a	0.0617
B(HL)	!A1&A2&!C	0.0100	n/a	n/a	0.0521
B(HL)	A1&!A2&!C	0.0100	n/a	n/a	0.0523
B(HL)	A1&A2&!C	0.0100	n/a	n/a	0.0521
A2(LH)	!A1&!B&!C	0.0100	n/a	n/a	0.0043

continues on next page

Table 223 – continued from previous page

A2(LH)	!A1&!B&C	0.0100	n/a	n/a	0.0044
A2(LH)	!A1&B&!C	0.0100	n/a	n/a	0.0682
A2(LH)	A1&!B&!C	0.0100	n/a	n/a	-0.0649
A2(LH)	A1&!B&C	0.0100	n/a	n/a	-0.0649
A2(LH)	A1&B&!C	0.0100	n/a	n/a	-0.0649
A2(LH)	A1&B&C	0.0100	n/a	n/a	-0.0498
A1(LH)	!A2&!B&!C	0.0100	n/a	n/a	0.0038
A1(LH)	!A2&!B&C	0.0100	n/a	n/a	0.0038
A1(LH)	!A2&B&!C	0.0100	n/a	n/a	0.0677
A1(LH)	A2&!B&!C	0.0100	n/a	n/a	-0.0658
A1(LH)	A2&!B&C	0.0100	n/a	n/a	-0.0657
A1(LH)	A2&B&!C	0.0100	n/a	n/a	-0.0657
A1(LH)	A2&B&C	0.0100	n/a	n/a	-0.0168
C(HL)	!A1&!A2&!B	0.0100	n/a	n/a	0.0476
C(HL)	!A1&!A2&B	0.0100	n/a	n/a	0.0506
C(HL)	!A1&A2&!B	0.0100	n/a	n/a	0.0499
C(HL)	A1&!A2&!B	0.0100	n/a	n/a	0.0499
C(HL)	A1&A2&!B	0.0100	n/a	n/a	0.0498
A2(HL)	!A1&!B&!C	0.0100	n/a	n/a	0.0670
A2(HL)	!A1&!B&C	0.0100	n/a	n/a	0.0670
A2(HL)	!A1&B&!C	0.0100	n/a	n/a	0.0670
A2(HL)	A1&!B&!C	0.0100	n/a	n/a	0.0704
A2(HL)	A1&!B&C	0.0100	n/a	n/a	0.0704
A2(HL)	A1&B&!C	0.0100	n/a	n/a	0.0700
A2(HL)	A1&B&C	0.0100	n/a	n/a	0.0596
B(LH)	!A1&!A2&!C	0.0100	n/a	n/a	-0.0477
B(LH)	!A1&!A2&C	0.0100	n/a	n/a	-0.0475
B(LH)	!A1&A2&!C	0.0100	n/a	n/a	-0.0375
B(LH)	A1&!A2&!C	0.0100	n/a	n/a	-0.0375
B(LH)	A1&A2&!C	0.0100	n/a	n/a	-0.0376
A1(HL)	!A2&!B&!C	0.0100	n/a	n/a	0.0673
A1(HL)	!A2&!B&C	0.0100	n/a	n/a	0.0674
A1(HL)	!A2&B&!C	0.0100	n/a	n/a	0.0674
A1(HL)	A2&!B&!C	0.0100	n/a	n/a	0.0707
A1(HL)	A2&!B&C	0.0100	n/a	n/a	0.0707
A1(HL)	A2&B&!C	0.0100	n/a	n/a	0.0703
A1(HL)	A2&B&C	0.0100	n/a	n/a	0.0384
C(LH)	!A1&!A2&!B	0.0100	n/a	n/a	-0.0477
C(LH)	!A1&!A2&B	0.0100	n/a	n/a	-0.0476
C(LH)	!A1&A2&!B	0.0100	n/a	n/a	-0.0476
C(LH)	A1&!A2&!B	0.0100	n/a	n/a	-0.0477
C(LH)	A1&A2&!B	0.0100	n/a	n/a	-0.0477

LEAKAGE POWER

When Condition	Power (nW)
!A1&!A2&!B&!C	0.1004
!A1&!A2&!B&C	0.1004
!A1&!A2&B&!C	0.1005
!A1&!A2&B&C	0.1012
!A1&A2&!B&!C	0.1600
!A1&A2&!B&C	0.1602
!A1&A2&B&!C	0.1992
A1&!A2&!B&!C	0.1600
A1&!A2&!B&C	0.1602
A1&!A2&B&!C	0.1992
A1&A2&!B&!C	0.1603
A1&A2&!B&C	0.1605
A1&A2&B&!C	0.1995
!A1&A2&B&C	0.1656
A1&!A2&B&C	0.1301
A1&A2&B&C	0.1301

gf180mcu_fd_sc_mcu9t5v0__oai211_2

gf180mcu_fd_sc_mcu9t5v0__oai211_2 symbol

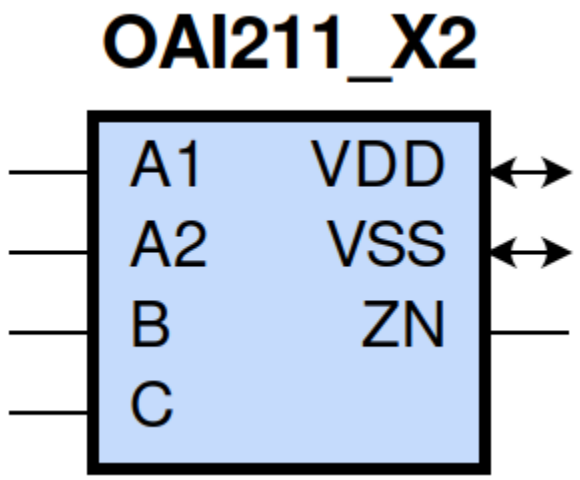

gf180mcu_fd_sc_mcu9t5v0__oai211_2 schematic

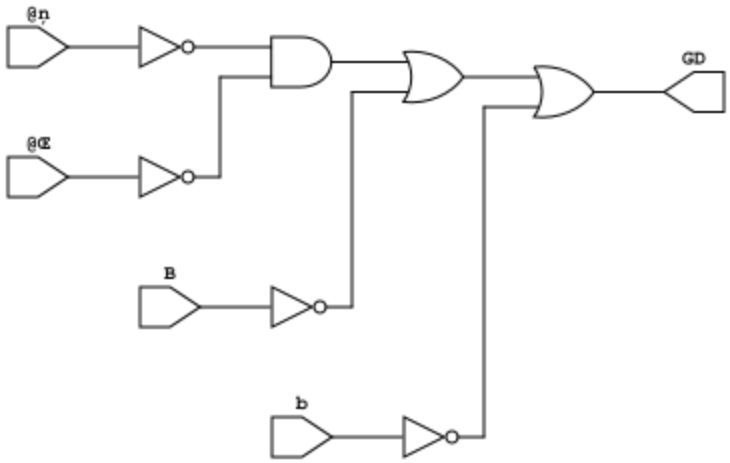

gf180mcu_fd_sc_mcu9t5v0__oai211_2 layout

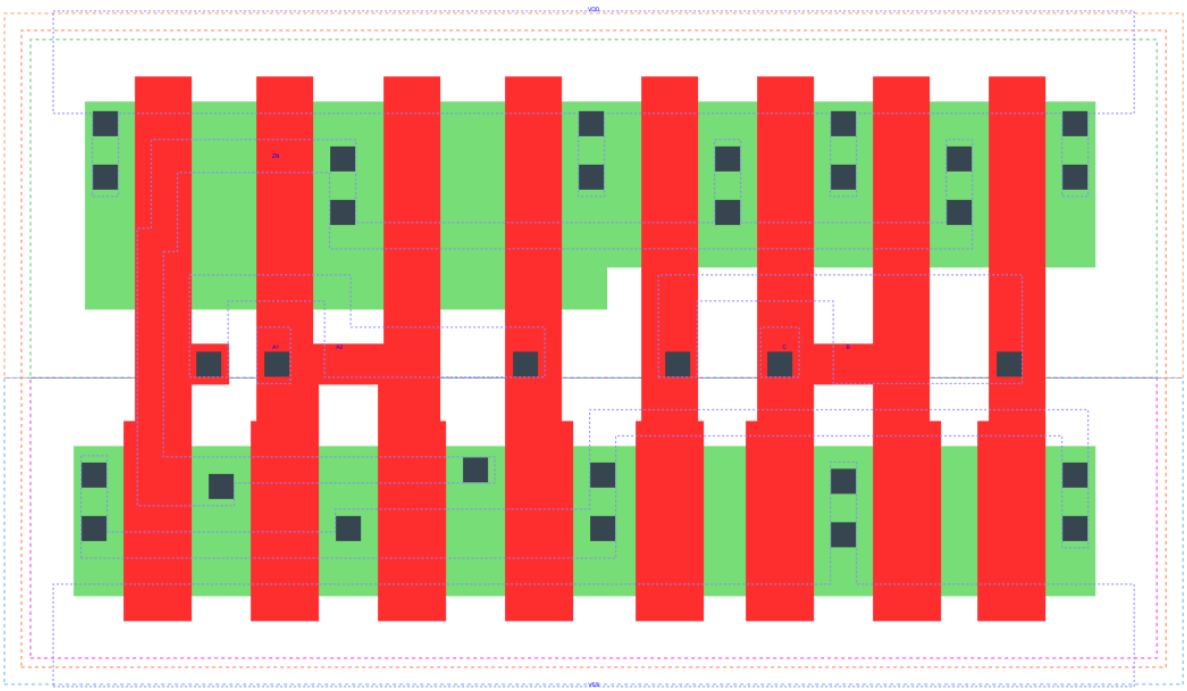

OAI211_X2 is a 2-input OR into 3-input NAND with 2X drive strength

Attributes

Attribute	Value
area	47.980800 μm^2

OUTPUT FUNCTIONS

Output Pin	Function
ZN	(((!A1)&(!A2))|(!B)|(!C))

TRUTH TABLE FOR ZN

A1	A2	B	C	ZN
0	0	?	?	1
?	?	0	?	1
?	?	?	0	1
1	?	1	1	0
?	1	1	1	0

FUNCTIONAL SCHEMATIC

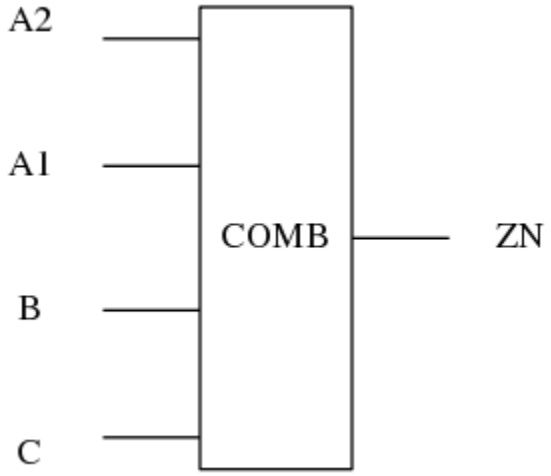

PIN CAPACITANCE (pf)

Pin	Type	Capacitance (pf)
A2	input	0.0140
A1	input	0.0135
B	input	0.0131
C	input	0.0121

DELAY AND OUTPUT TRANSITION TIME corresponding to min slew and load

Input Pin	Output	When Condition	Tin (ns)	Out Load (pf)	Delay (ns)	Tout (ns)
A2(HL)	ZN(LH)	!A1&B&C	0.0100	0.0010	0.1284	0.0775
A2(LH)	ZN(HL)	!A1&B&C	0.0100	0.0010	0.0952	0.0721
A1(HL)	ZN(LH)	!A2&B&C	0.0100	0.0010	0.1044	0.0772
A1(LH)	ZN(HL)	!A2&B&C	0.0100	0.0010	0.0686	0.0491
B(LH)	ZN(HL)	!A1&A2&C	0.0100	0.0010	0.1348	0.0722
B(LH)	ZN(HL)	A1&!A2&C	0.0100	0.0010	0.1047	0.0514
B(LH)	ZN(HL)	A1&A2&C	0.0100	0.0010	0.0935	0.0567
B(HL)	ZN(LH)	!A1&A2&C	0.0100	0.0010	0.1283	0.1116
B(HL)	ZN(LH)	A1&!A2&C	0.0100	0.0010	0.1211	0.0840
B(HL)	ZN(LH)	A1&A2&C	0.0100	0.0010	0.1390	0.0966
C(HL)	ZN(LH)	!A1&A2&B	0.0100	0.0010	0.1450	0.1314
C(HL)	ZN(LH)	A1&!A2&B	0.0100	0.0010	0.1364	0.1009
C(HL)	ZN(LH)	A1&A2&B	0.0100	0.0010	0.1572	0.1146
C(LH)	ZN(HL)	!A1&A2&B	0.0100	0.0010	0.1457	0.0721
C(LH)	ZN(HL)	A1&!A2&B	0.0100	0.0010	0.1156	0.0515
C(LH)	ZN(HL)	A1&A2&B	0.0100	0.0010	0.1043	0.0566

DYNAMIC ENERGY

Input Pin	When Condition	Tin (ns)	Output	Out Load (pf)	Energy (uW/MHz)
C	!A1&A2&B	0.0100	ZN(LH)	0.0010	0.8032
C	A1&!A2&B	0.0100	ZN(LH)	0.0010	0.7134
C	A1&A2&B	0.0100	ZN(LH)	0.0010	0.7845
C	!A1&A2&B	0.0100	ZN(HL)	0.0010	0.1190
C	A1&!A2&B	0.0100	ZN(HL)	0.0010	0.0441
C	A1&A2&B	0.0100	ZN(HL)	0.0010	0.0443
A1	!A2&B&C	0.0100	ZN(LH)	0.0010	0.3795
B	!A1&A2&C	0.0100	ZN(HL)	0.0010	0.1190
B	A1&!A2&C	0.0100	ZN(HL)	0.0010	0.0441
B	A1&A2&C	0.0100	ZN(HL)	0.0010	0.0441
A2	!A1&B&C	0.0100	ZN(LH)	0.0010	0.4690
A1	!A2&B&C	0.0100	ZN(HL)	0.0010	0.0365
B	!A1&A2&C	0.0100	ZN(LH)	0.0010	0.6933
B	A1&!A2&C	0.0100	ZN(LH)	0.0010	0.6036

continues on next page

Table 224 – continued from previous page

B	A1&A2&C	0.0100	ZN(LH)	0.0010	0.6767
A2	!A1&B&C	0.0100	ZN(HL)	0.0010	0.1023
B(HL)	!A1&!A2&!C	0.0100	n/a	n/a	0.1517
B(HL)	!A1&!A2&C	0.0100	n/a	n/a	0.1233
B(HL)	!A1&A2&!C	0.0100	n/a	n/a	0.1030
B(HL)	A1&!A2&!C	0.0100	n/a	n/a	0.1035
B(HL)	A1&A2&!C	0.0100	n/a	n/a	0.1032
A2(LH)	!A1&!B&!C	0.0100	n/a	n/a	0.0240
A2(LH)	!A1&!B&C	0.0100	n/a	n/a	0.0241
A2(LH)	!A1&B&!C	0.0100	n/a	n/a	0.1508
A2(LH)	A1&!B&!C	0.0100	n/a	n/a	-0.1299
A2(LH)	A1&!B&C	0.0100	n/a	n/a	-0.1298
A2(LH)	A1&B&!C	0.0100	n/a	n/a	-0.1298
A2(LH)	A1&B&C	0.0100	n/a	n/a	-0.0995
A1(LH)	!A2&!B&!C	0.0100	n/a	n/a	0.0229
A1(LH)	!A2&!B&C	0.0100	n/a	n/a	0.0230
A1(LH)	!A2&B&!C	0.0100	n/a	n/a	0.1497
A1(LH)	A2&!B&!C	0.0100	n/a	n/a	-0.1316
A1(LH)	A2&!B&C	0.0100	n/a	n/a	-0.1313
A1(LH)	A2&B&!C	0.0100	n/a	n/a	-0.1313
A1(LH)	A2&B&C	0.0100	n/a	n/a	-0.0337
C(HL)	!A1&!A2&!B	0.0100	n/a	n/a	0.0952
C(HL)	!A1&!A2&B	0.0100	n/a	n/a	0.1003
C(HL)	!A1&A2&!B	0.0100	n/a	n/a	0.0990
C(HL)	A1&!A2&!B	0.0100	n/a	n/a	0.0990
C(HL)	A1&A2&!B	0.0100	n/a	n/a	0.0988
A2(HL)	!A1&!B&!C	0.0100	n/a	n/a	0.1340
A2(HL)	!A1&!B&C	0.0100	n/a	n/a	0.1341
A2(HL)	!A1&B&!C	0.0100	n/a	n/a	0.1340
A2(HL)	A1&!B&!C	0.0100	n/a	n/a	0.1400
A2(HL)	A1&!B&C	0.0100	n/a	n/a	0.1401
A2(HL)	A1&B&!C	0.0100	n/a	n/a	0.1396
A2(HL)	A1&B&C	0.0100	n/a	n/a	0.1189
B(LH)	!A1&!A2&!C	0.0100	n/a	n/a	-0.0952
B(LH)	!A1&!A2&C	0.0100	n/a	n/a	-0.0948
B(LH)	!A1&A2&!C	0.0100	n/a	n/a	-0.0769
B(LH)	A1&!A2&!C	0.0100	n/a	n/a	-0.0770
B(LH)	A1&A2&!C	0.0100	n/a	n/a	-0.0771
A1(HL)	!A2&!B&!C	0.0100	n/a	n/a	0.1344
A1(HL)	!A2&!B&C	0.0100	n/a	n/a	0.1344
A1(HL)	!A2&B&!C	0.0100	n/a	n/a	0.1344
A1(HL)	A2&!B&!C	0.0100	n/a	n/a	0.1400
A1(HL)	A2&!B&C	0.0100	n/a	n/a	0.1400
A1(HL)	A2&B&!C	0.0100	n/a	n/a	0.1395
A1(HL)	A2&B&C	0.0100	n/a	n/a	0.0794
C(LH)	!A1&!A2&!B	0.0100	n/a	n/a	-0.0952
C(LH)	!A1&!A2&B	0.0100	n/a	n/a	-0.0948
C(LH)	!A1&A2&!B	0.0100	n/a	n/a	-0.0950
C(LH)	A1&!A2&!B	0.0100	n/a	n/a	-0.0952
C(LH)	A1&A2&!B	0.0100	n/a	n/a	-0.0952

LEAKAGE POWER

When Condition	Power (nW)
!A1&!A2&!B&!C	0.1509
!A1&!A2&!B&C	0.1509
!A1&!A2&B&!C	0.1511
!A1&!A2&B&C	0.1523
!A1&A2&!B&!C	0.2695
!A1&A2&!B&C	0.2699
!A1&A2&B&!C	0.3480
A1&!A2&!B&!C	0.2695
A1&!A2&!B&C	0.2699
A1&!A2&B&!C	0.3480
A1&A2&!B&!C	0.2701
A1&A2&!B&C	0.2705
A1&A2&B&!C	0.3487
!A1&A2&B&C	0.2812
A1&!A2&B&C	0.2103
A1&A2&B&C	0.2103

gf180mcu_fd_sc_mcu9t5v0__oai211_4

gf180mcu_fd_sc_mcu9t5v0__oai211_4 symbol

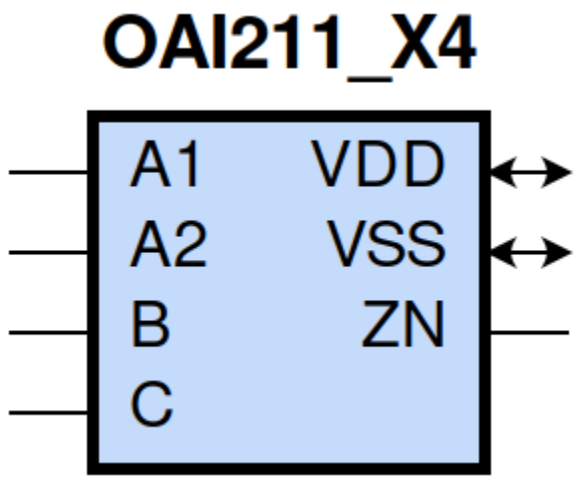

gf180mcu_fd_sc_mcu9t5v0__oai211_4 schematic

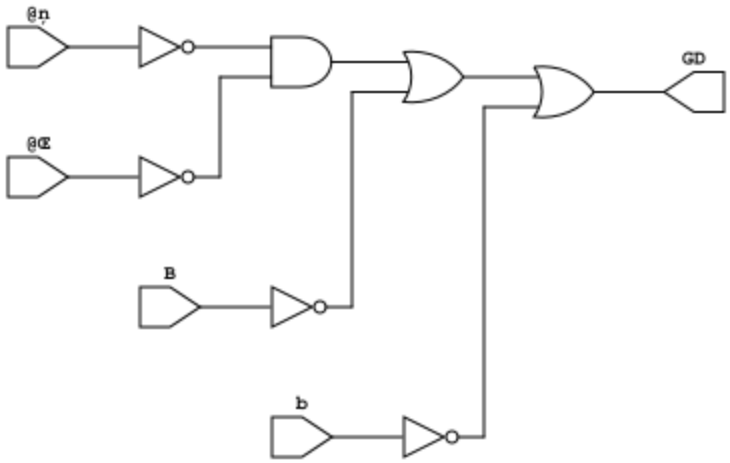

gf180mcu_fd_sc_mcu9t5v0__oai211_4 layout

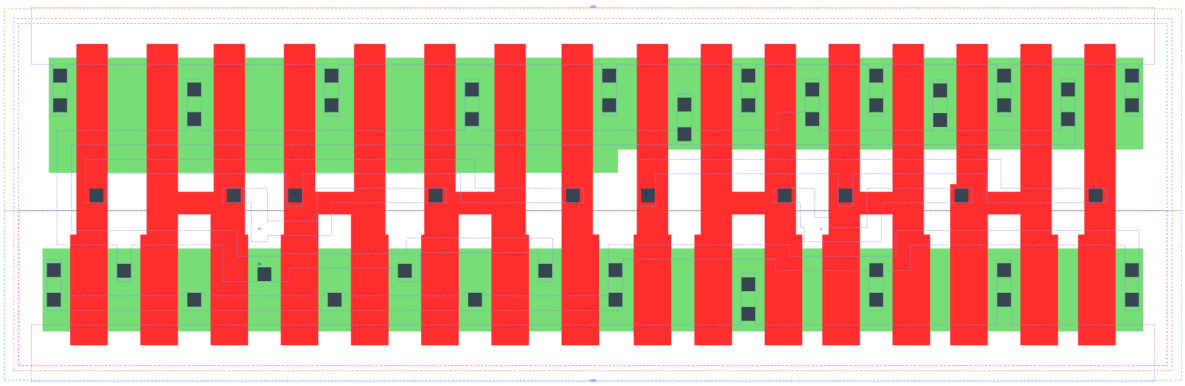

OAI211_X4 is a 2-input OR into 3-input NAND with 4X drive strength

Attributes

Attribute	Value
area	90.316800 μm^2

OUTPUT FUNCTIONS

Output Pin	Function
ZN	(((!A1)&(!A2))|(!B)|(!C))

TRUTH TABLE FOR ZN

A1	A2	B	C	ZN
0	0	?	?	1
?	?	0	?	1
?	?	?	0	1
1	?	1	1	0
?	1	1	1	0

FUNCTIONAL SCHEMATIC

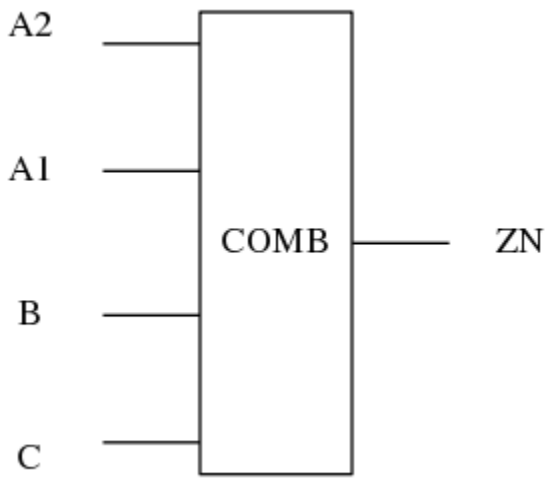

PIN CAPACITANCE (pf)

Pin	Type	Capacitance (pf)
A2	input	0.0281
A1	input	0.0276
B	input	0.0260
C	input	0.0249

DELAY AND OUTPUT TRANSITION TIME corresponding to min slew and load

Input Pin	Output	When Condition	Tin (ns)	Out Load (pf)	Delay (ns)	Tout (ns)
A2(HL)	ZN(LH)	!A1&B&C	0.0100	0.0010	0.1261	0.0751
A2(LH)	ZN(HL)	!A1&B&C	0.0100	0.0010	0.0946	0.0705
A1(HL)	ZN(LH)	!A2&B&C	0.0100	0.0010	0.1017	0.0747
A1(LH)	ZN(HL)	!A2&B&C	0.0100	0.0010	0.0676	0.0478
B(LH)	ZN(HL)	!A1&A2&C	0.0100	0.0010	0.1313	0.0709
B(LH)	ZN(HL)	A1&!A2&C	0.0100	0.0010	0.1010	0.0496
B(LH)	ZN(HL)	A1&A2&C	0.0100	0.0010	0.0903	0.0547
B(HL)	ZN(LH)	!A1&A2&C	0.0100	0.0010	0.1237	0.1076
B(HL)	ZN(LH)	A1&!A2&C	0.0100	0.0010	0.1167	0.0803
B(HL)	ZN(LH)	A1&A2&C	0.0100	0.0010	0.1346	0.0930
C(HL)	ZN(LH)	!A1&A2&B	0.0100	0.0010	0.1406	0.1277
C(HL)	ZN(LH)	A1&!A2&B	0.0100	0.0010	0.1320	0.0972
C(HL)	ZN(LH)	A1&A2&B	0.0100	0.0010	0.1525	0.1108
C(LH)	ZN(HL)	!A1&A2&B	0.0100	0.0010	0.1420	0.0709
C(LH)	ZN(HL)	A1&!A2&B	0.0100	0.0010	0.1118	0.0496
C(LH)	ZN(HL)	A1&A2&B	0.0100	0.0010	0.1011	0.0546

DYNAMIC ENERGY

Input Pin	When Condition	Tin (ns)	Output	Out Load (pf)	Energy (uW/MHz)
C	!A1&A2&B	0.0100	ZN(LH)	0.0010	1.5769
C	A1&!A2&B	0.0100	ZN(LH)	0.0010	1.3978
C	A1&A2&B	0.0100	ZN(LH)	0.0010	1.5391
C	!A1&A2&B	0.0100	ZN(HL)	0.0010	0.2404
C	A1&!A2&B	0.0100	ZN(HL)	0.0010	0.0863
C	A1&A2&B	0.0100	ZN(HL)	0.0010	0.0864
A1	!A2&B&C	0.0100	ZN(LH)	0.0010	0.7608
B	!A1&A2&C	0.0100	ZN(HL)	0.0010	0.2400
B	A1&!A2&C	0.0100	ZN(HL)	0.0010	0.0860
B	A1&A2&C	0.0100	ZN(HL)	0.0010	0.0859
A2	!A1&B&C	0.0100	ZN(LH)	0.0010	0.9392
A1	!A2&B&C	0.0100	ZN(HL)	0.0010	0.0712
B	!A1&A2&C	0.0100	ZN(LH)	0.0010	1.3571
B	A1&!A2&C	0.0100	ZN(LH)	0.0010	1.1799
B	A1&A2&C	0.0100	ZN(LH)	0.0010	1.3242
A2	!A1&B&C	0.0100	ZN(HL)	0.0010	0.2064
B(HL)	!A1&!A2&!C	0.0100	n/a	n/a	0.3045
B(HL)	!A1&!A2&C	0.0100	n/a	n/a	0.2466
B(HL)	!A1&A2&!C	0.0100	n/a	n/a	0.2074
B(HL)	A1&!A2&!C	0.0100	n/a	n/a	0.2082
B(HL)	A1&A2&!C	0.0100	n/a	n/a	0.2076
A2(LH)	!A1&!B&!C	0.0100	n/a	n/a	0.0175
A2(LH)	!A1&!B&C	0.0100	n/a	n/a	0.0176
A2(LH)	!A1&B&!C	0.0100	n/a	n/a	0.2706
A2(LH)	A1&!B&!C	0.0100	n/a	n/a	-0.2600
A2(LH)	A1&!B&C	0.0100	n/a	n/a	-0.2600

continues on next page

Table 225 – continued from previous page

A2(LH)	A1&B&!C	0.0100	n/a	n/a	-0.2599
A2(LH)	A1&B&C	0.0100	n/a	n/a	-0.1990
A1(LH)	!A2&!B&!C	0.0100	n/a	n/a	0.0158
A1(LH)	!A2&!B&C	0.0100	n/a	n/a	0.0157
A1(LH)	!A2&B&!C	0.0100	n/a	n/a	0.2685
A1(LH)	A2&!B&!C	0.0100	n/a	n/a	-0.2628
A1(LH)	A2&!B&C	0.0100	n/a	n/a	-0.2624
A1(LH)	A2&B&!C	0.0100	n/a	n/a	-0.2626
A1(LH)	A2&B&C	0.0100	n/a	n/a	-0.0676
C(HL)	!A1&!A2&!B	0.0100	n/a	n/a	0.1904
C(HL)	!A1&!A2&B	0.0100	n/a	n/a	0.2023
C(HL)	!A1&A2&!B	0.0100	n/a	n/a	0.1994
C(HL)	A1&!A2&!B	0.0100	n/a	n/a	0.1993
C(HL)	A1&A2&!B	0.0100	n/a	n/a	0.1989
A2(HL)	!A1&!B&!C	0.0100	n/a	n/a	0.2674
A2(HL)	!A1&!B&C	0.0100	n/a	n/a	0.2675
A2(HL)	!A1&B&!C	0.0100	n/a	n/a	0.2675
A2(HL)	A1&!B&!C	0.0100	n/a	n/a	0.2815
A2(HL)	A1&!B&C	0.0100	n/a	n/a	0.2816
A2(HL)	A1&B&!C	0.0100	n/a	n/a	0.2801
A2(HL)	A1&B&C	0.0100	n/a	n/a	0.2380
B(LH)	!A1&!A2&!C	0.0100	n/a	n/a	-0.1899
B(LH)	!A1&!A2&C	0.0100	n/a	n/a	-0.1894
B(LH)	!A1&A2&!C	0.0100	n/a	n/a	-0.1523
B(LH)	A1&!A2&!C	0.0100	n/a	n/a	-0.1524
B(LH)	A1&A2&!C	0.0100	n/a	n/a	-0.1526
A1(HL)	!A2&!B&!C	0.0100	n/a	n/a	0.2686
A1(HL)	!A2&!B&C	0.0100	n/a	n/a	0.2685
A1(HL)	!A2&B&!C	0.0100	n/a	n/a	0.2684
A1(HL)	A2&!B&!C	0.0100	n/a	n/a	0.2819
A1(HL)	A2&!B&C	0.0100	n/a	n/a	0.2818
A1(HL)	A2&B&!C	0.0100	n/a	n/a	0.2801
A1(HL)	A2&B&C	0.0100	n/a	n/a	0.1624
C(LH)	!A1&!A2&!B	0.0100	n/a	n/a	-0.1899
C(LH)	!A1&!A2&B	0.0100	n/a	n/a	-0.1894
C(LH)	!A1&A2&!B	0.0100	n/a	n/a	-0.1896
C(LH)	A1&!A2&!B	0.0100	n/a	n/a	-0.1900
C(LH)	A1&A2&!B	0.0100	n/a	n/a	-0.1900

LEAKAGE POWER

When Condition	Power (nW)
!A1&!A2&!B&!C	0.2517
!A1&!A2&!B&C	0.2517
!A1&!A2&B&!C	0.2522
!A1&!A2&B&C	0.2547
!A1&A2&!B&!C	0.4895
!A1&A2&!B&C	0.4904
!A1&A2&B&!C	0.6465
A1&!A2&!B&!C	0.4895
A1&!A2&!B&C	0.4904
A1&!A2&B&!C	0.6465
A1&A2&!B&!C	0.4907
A1&A2&!B&C	0.4916
A1&A2&B&!C	0.6478
!A1&A2&B&C	0.5123
A1&!A2&B&C	0.3705
A1&A2&B&C	0.3705

gf180mcu_fd_sc_mcu9t5v0__oai22_1

gf180mcu_fd_sc_mcu9t5v0__oai22_1 symbol

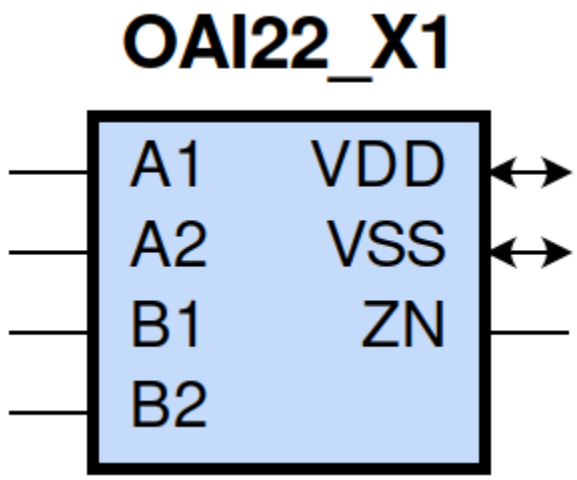

gf180mcu_fd_sc_mcu9t5v0__oai22_1 schematic

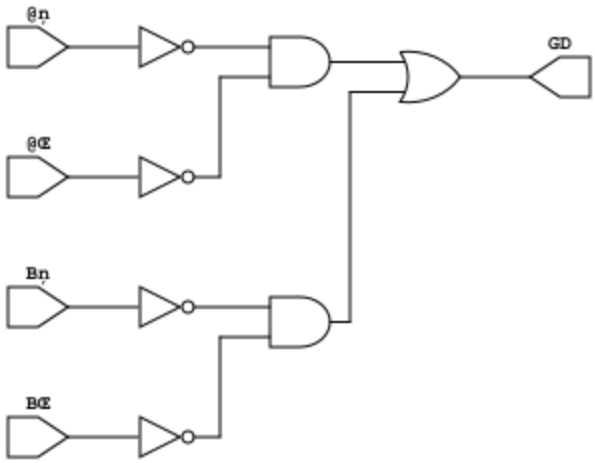

gf180mcu_fd_sc_mcu9t5v0__oai22_1 layout

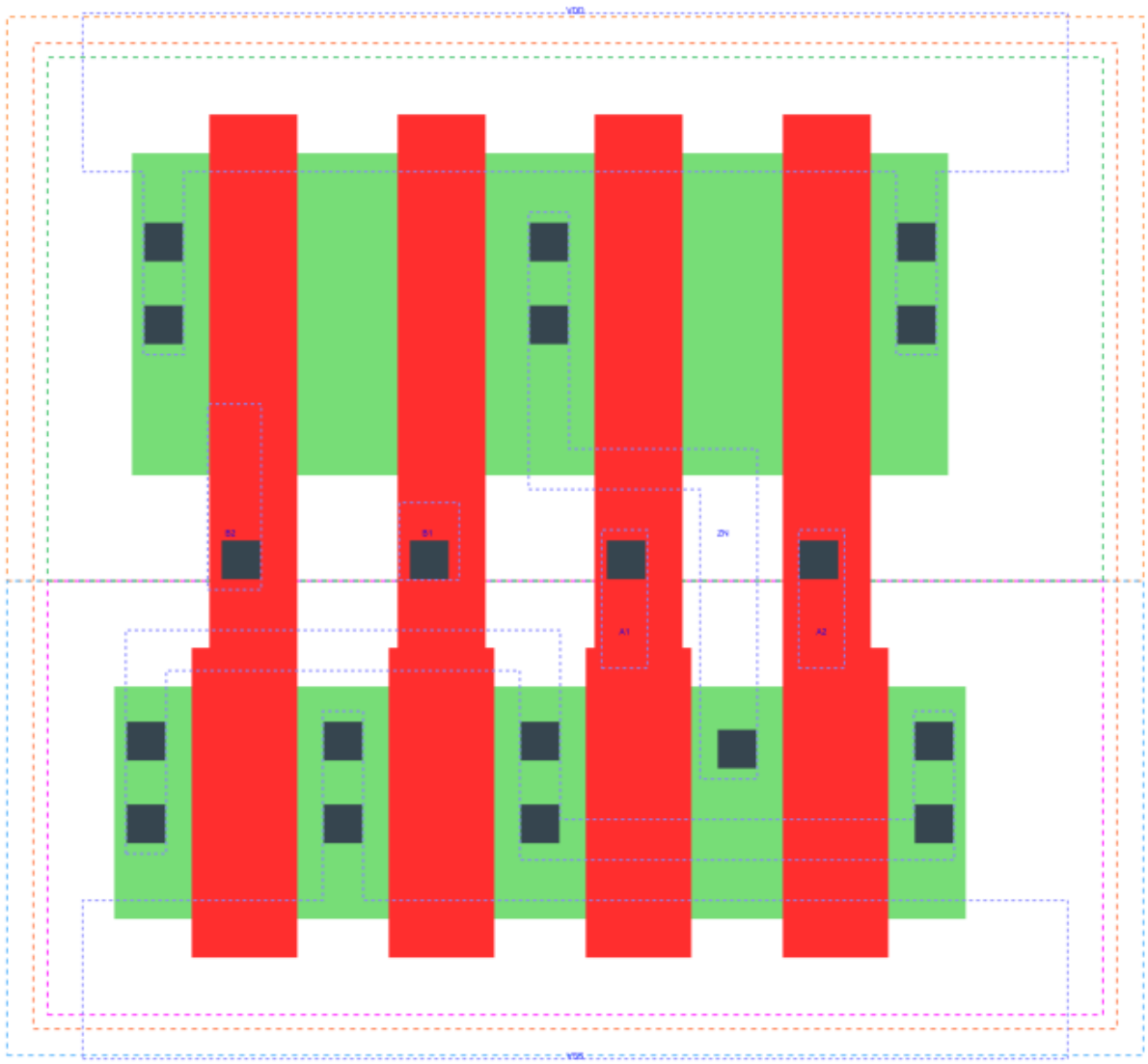

OAI22_X1 is a two 2-input OR into 2-input NAND with 1X drive strength

Attributes

Attribute	Value
area	28.224000 μm^2

OUTPUT FUNCTIONS

Output Pin	Function
ZN	(((!A1)&(!A2))|((!B1)&(!B2)))

TRUTH TABLE FOR ZN

A1	A2	B1	B2	ZN
0	0	?	?	1
?	?	0	0	1
1	?	1	?	0
1	?	?	1	0
?	1	1	?	0
?	1	?	1	0

FUNCTIONAL SCHEMATIC

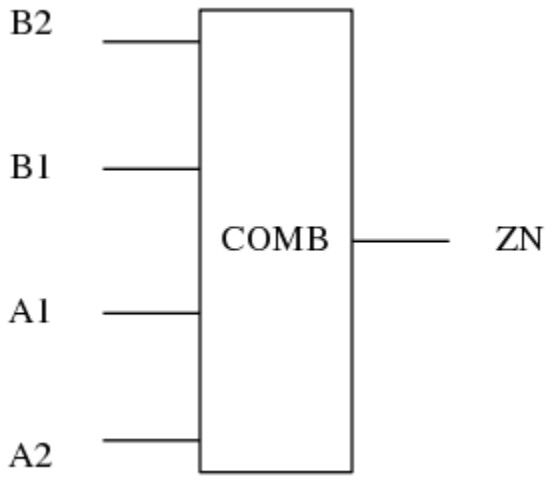

PIN CAPACITANCE (pf)

Pin	Type	Capacitance (pf)
B2	input	0.0066
B1	input	0.0067
A1	input	0.0070
A2	input	0.0066

DELAY AND OUTPUT TRANSITION TIME corresponding to min slew and load

Input Pin	Output	When Condition	Tin (ns)	Out Load (pf)	Delay (ns)	Tout (ns)
B2(HL)	ZN(LH)	!A1&A2&!B1	0.0100	0.0010	0.2130	0.1791
B2(HL)	ZN(LH)	A1&!A2&!B1	0.0100	0.0010	0.2010	0.1349
B2(HL)	ZN(LH)	A1&A2&!B1	0.0100	0.0010	0.2268	0.1537
B2(LH)	ZN(HL)	!A1&A2&!B1	0.0100	0.0010	0.1273	0.0613
B2(LH)	ZN(HL)	A1&!A2&!B1	0.0100	0.0010	0.1035	0.0465
B2(LH)	ZN(HL)	A1&A2&!B1	0.0100	0.0010	0.0870	0.0436
B1(HL)	ZN(LH)	!A1&A2&!B2	0.0100	0.0010	0.1890	0.1789
B1(HL)	ZN(LH)	A1&!A2&!B2	0.0100	0.0010	0.1770	0.1353
B1(HL)	ZN(LH)	A1&A2&!B2	0.0100	0.0010	0.2029	0.1537
B1(LH)	ZN(HL)	!A1&A2&!B2	0.0100	0.0010	0.1057	0.0466
B1(LH)	ZN(HL)	A1&!A2&!B2	0.0100	0.0010	0.0843	0.0321
B1(LH)	ZN(HL)	A1&A2&!B2	0.0100	0.0010	0.0729	0.0324
A1(HL)	ZN(LH)	!A2&!B1&B2	0.0100	0.0010	0.1031	0.1080
A1(HL)	ZN(LH)	!A2&B1&!B2	0.0100	0.0010	0.0949	0.0697
A1(HL)	ZN(LH)	!A2&B1&B2	0.0100	0.0010	0.0938	0.0697
A1(LH)	ZN(HL)	!A2&!B1&B2	0.0100	0.0010	0.0736	0.0460
A1(LH)	ZN(HL)	!A2&B1&!B2	0.0100	0.0010	0.0527	0.0309
A1(LH)	ZN(HL)	!A2&B1&B2	0.0100	0.0010	0.0463	0.0242
A2(HL)	ZN(LH)	!A1&!B1&B2	0.0100	0.0010	0.1273	0.1084
A2(HL)	ZN(LH)	!A1&B1&!B2	0.0100	0.0010	0.1188	0.0703
A2(HL)	ZN(LH)	!A1&B1&B2	0.0100	0.0010	0.1180	0.0702
A2(LH)	ZN(HL)	!A1&!B1&B2	0.0100	0.0010	0.0952	0.0613
A2(LH)	ZN(HL)	!A1&B1&!B2	0.0100	0.0010	0.0713	0.0465
A2(LH)	ZN(HL)	!A1&B1&B2	0.0100	0.0010	0.0603	0.0360

DYNAMIC ENERGY

Input Pin	When Condition	Tin (ns)	Output	Out Load (pf)	Energy (uW/MHz)
A1	!A2&!B1&B2	0.0100	ZN(LH)	0.0010	0.2102
A1	!A2&B1&!B2	0.0100	ZN(LH)	0.0010	0.1659
A1	!A2&B1&B2	0.0100	ZN(LH)	0.0010	0.1646
B2	!A1&A2&!B1	0.0100	ZN(LH)	0.0010	0.4040
B2	A1&!A2&!B1	0.0100	ZN(LH)	0.0010	0.3596
B2	A1&A2&!B1	0.0100	ZN(LH)	0.0010	0.3954
B1	!A1&A2&!B2	0.0100	ZN(LH)	0.0010	0.3596
B1	A1&!A2&!B2	0.0100	ZN(LH)	0.0010	0.3151
B1	A1&A2&!B2	0.0100	ZN(LH)	0.0010	0.3511
A2	!A1&!B1&B2	0.0100	ZN(LH)	0.0010	0.2551
A2	!A1&B1&!B2	0.0100	ZN(LH)	0.0010	0.2108
A2	!A1&B1&B2	0.0100	ZN(LH)	0.0010	0.2096
B1	!A1&A2&!B2	0.0100	ZN(HL)	0.0010	0.0460
B1	A1&!A2&!B2	0.0100	ZN(HL)	0.0010	0.0076
B1	A1&A2&!B2	0.0100	ZN(HL)	0.0010	0.0079
A1	!A2&!B1&B2	0.0100	ZN(HL)	0.0010	0.0462
A1	!A2&B1&!B2	0.0100	ZN(HL)	0.0010	0.0083
A1	!A2&B1&B2	0.0100	ZN(HL)	0.0010	0.0083

continues on next page

Table 226 – continued from previous page

B2	!A1&A2&!B1	0.0100	ZN(HL)	0.0010	0.0780
B2	A1&!A2&!B1	0.0100	ZN(HL)	0.0010	0.0410
B2	A1&A2&!B1	0.0100	ZN(HL)	0.0010	0.0410
A2	!A1&!B1&B2	0.0100	ZN(HL)	0.0010	0.0786
A2	!A1&B1&!B2	0.0100	ZN(HL)	0.0010	0.0413
A2	!A1&B1&B2	0.0100	ZN(HL)	0.0010	0.0414
A1(LH)	!A2&!B1&!B2	0.0100	n/a	n/a	0.0403
A1(LH)	A2&!B1&!B2	0.0100	n/a	n/a	-0.0656
A1(LH)	A2&!B1&B2	0.0100	n/a	n/a	-0.0169
A1(LH)	A2&B1&!B2	0.0100	n/a	n/a	-0.0169
A1(LH)	A2&B1&B2	0.0100	n/a	n/a	-0.0169
B2(LH)	!A1&!A2&!B1	0.0100	n/a	n/a	-0.0596
B2(LH)	!A1&!A2&B1	0.0100	n/a	n/a	-0.0577
B2(LH)	!A1&A2&B1	0.0100	n/a	n/a	-0.0498
B2(LH)	A1&!A2&B1	0.0100	n/a	n/a	-0.0498
B2(LH)	A1&A2&B1	0.0100	n/a	n/a	-0.0498
A2(HL)	!A1&!B1&!B2	0.0100	n/a	n/a	0.0670
A2(HL)	A1&!B1&!B2	0.0100	n/a	n/a	0.0685
A2(HL)	A1&!B1&B2	0.0100	n/a	n/a	0.0595
A2(HL)	A1&B1&!B2	0.0100	n/a	n/a	0.0595
A2(HL)	A1&B1&B2	0.0100	n/a	n/a	0.0595
B1(HL)	!A1&!A2&!B2	0.0100	n/a	n/a	0.0665
B1(HL)	!A1&!A2&B2	0.0100	n/a	n/a	0.0599
B1(HL)	!A1&A2&B2	0.0100	n/a	n/a	0.0397
B1(HL)	A1&!A2&B2	0.0100	n/a	n/a	0.0397
B1(HL)	A1&A2&B2	0.0100	n/a	n/a	0.0397
B2(HL)	!A1&!A2&!B1	0.0100	n/a	n/a	0.0662
B2(HL)	!A1&!A2&B1	0.0100	n/a	n/a	0.0595
B2(HL)	!A1&A2&B1	0.0100	n/a	n/a	0.0595
B2(HL)	A1&!A2&B1	0.0100	n/a	n/a	0.0595
B2(HL)	A1&A2&B1	0.0100	n/a	n/a	0.0595
A1(HL)	!A2&!B1&!B2	0.0100	n/a	n/a	0.0674
A1(HL)	A2&!B1&!B2	0.0100	n/a	n/a	0.0687
A1(HL)	A2&!B1&B2	0.0100	n/a	n/a	0.0397
A1(HL)	A2&B1&!B2	0.0100	n/a	n/a	0.0397
A1(HL)	A2&B1&B2	0.0100	n/a	n/a	0.0397
B1(LH)	!A1&!A2&!B2	0.0100	n/a	n/a	-0.0601
B1(LH)	!A1&!A2&B2	0.0100	n/a	n/a	-0.0584
B1(LH)	!A1&A2&B2	0.0100	n/a	n/a	-0.0169
B1(LH)	A1&!A2&B2	0.0100	n/a	n/a	-0.0169
B1(LH)	A1&A2&B2	0.0100	n/a	n/a	-0.0169
A2(LH)	!A1&!B1&!B2	0.0100	n/a	n/a	0.0410
A2(LH)	A1&!B1&!B2	0.0100	n/a	n/a	-0.0649
A2(LH)	A1&!B1&B2	0.0100	n/a	n/a	-0.0497
A2(LH)	A1&B1&!B2	0.0100	n/a	n/a	-0.0497
A2(LH)	A1&B1&B2	0.0100	n/a	n/a	-0.0497

LEAKAGE POWER

When Condition	Power (nW)
!A1&!A2&!B1&!B2	0.1005
!A1&!A2&!B1&B2	0.1012
!A1&!A2&B1&!B2	0.1012
!A1&!A2&B1&B2	0.1012
!A1&A2&!B1&!B2	0.1804
A1&!A2&!B1&!B2	0.1804
A1&A2&!B1&!B2	0.1808
!A1&A2&!B1&B2	0.1746
!A1&A2&B1&!B2	0.1392
!A1&A2&B1&B2	0.1392
A1&!A2&!B1&B2	0.1392
A1&!A2&B1&!B2	0.1037
A1&!A2&B1&B2	0.1037
A1&A2&!B1&B2	0.1392
A1&A2&B1&!B2	0.1037
A1&A2&B1&B2	0.1037

gf180mcu_fd_sc_mcu9t5v0__oai22_2

gf180mcu_fd_sc_mcu9t5v0__oai22_2 symbol

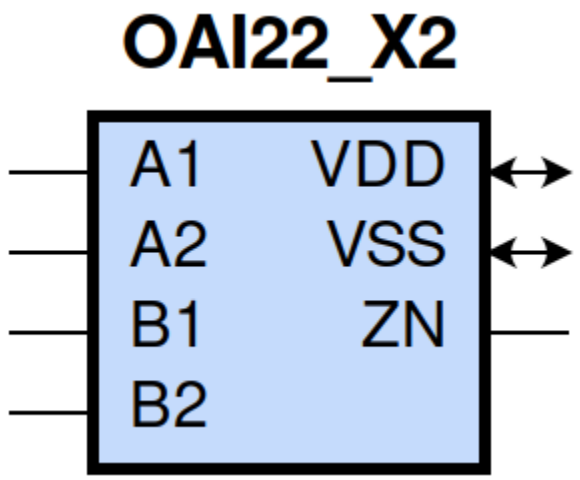

gf180mcu_fd_sc_mcu9t5v0__oai22_2 schematic

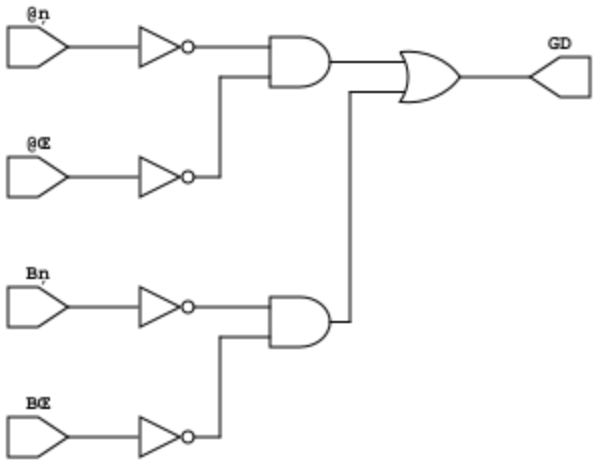

gf180mcu_fd_sc_mcu9t5v0__oai22_2 layout

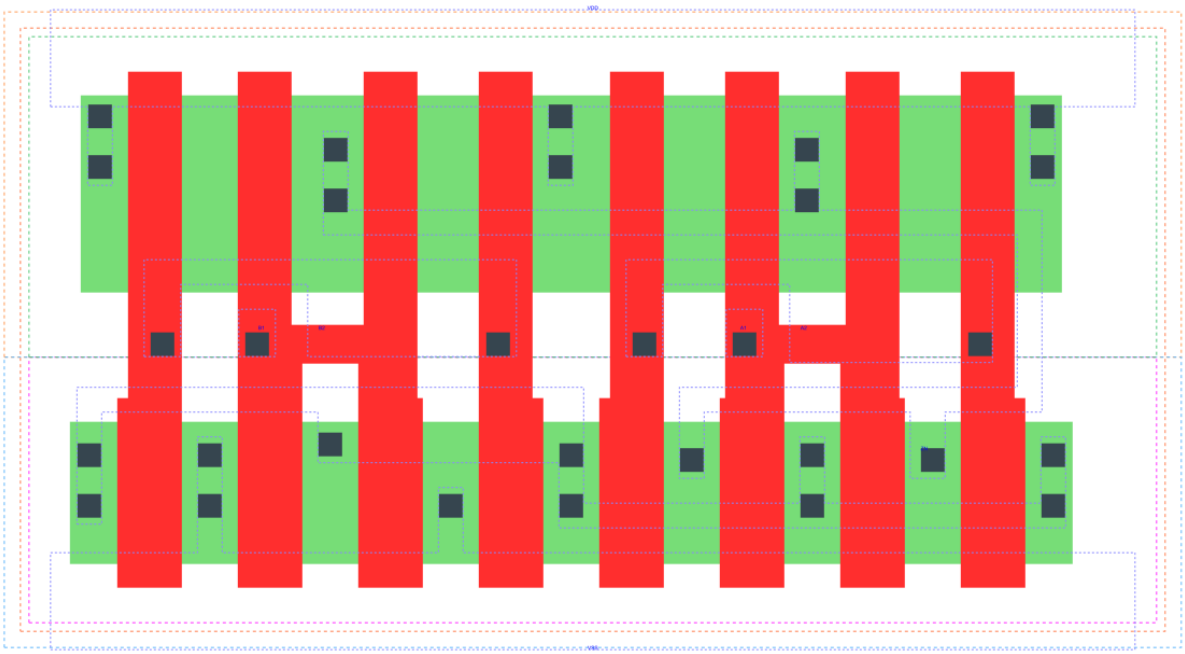

OAI22_X2 is a two 2-input OR into 2-input NAND with 2X drive strength

Attributes

Attribute	Value
area	50.803200 μm^2

OUTPUT FUNCTIONS

Output Pin	Function
ZN	(((!A1)&(!A2))|((!B1)&(!B2)))

TRUTH TABLE FOR ZN

A1	A2	B1	B2	ZN
0	0	?	?	1
?	?	0	0	1
1	?	1	?	0
1	?	?	1	0
?	1	1	?	0
?	1	?	1	0

FUNCTIONAL SCHEMATIC

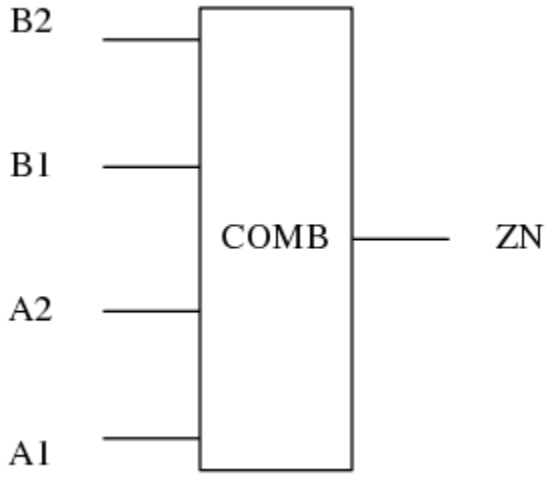

PIN CAPACITANCE (pf)

Pin	Type	Capacitance (pf)
B2	input	0.0139
B1	input	0.0134
A2	input	0.0142
A1	input	0.0135

DELAY AND OUTPUT TRANSITION TIME corresponding to min slew and load

Input Pin	Output	When Condition	Tin (ns)	Out Load (pf)	Delay (ns)	Tout (ns)
B2(HL)	ZN(LH)	!A1&A2&!B1	0.0100	0.0010	0.2077	0.1747
B2(HL)	ZN(LH)	A1&!A2&!B1	0.0100	0.0010	0.1961	0.1316
B2(HL)	ZN(LH)	A1&A2&!B1	0.0100	0.0010	0.2213	0.1497
B2(LH)	ZN(HL)	!A1&A2&!B1	0.0100	0.0010	0.1252	0.0612
B2(LH)	ZN(HL)	A1&!A2&!B1	0.0100	0.0010	0.1016	0.0466
B2(LH)	ZN(HL)	A1&A2&!B1	0.0100	0.0010	0.0853	0.0433
B1(HL)	ZN(LH)	!A1&A2&!B2	0.0100	0.0010	0.1840	0.1745
B1(HL)	ZN(LH)	A1&!A2&!B2	0.0100	0.0010	0.1725	0.1314
B1(HL)	ZN(LH)	A1&A2&!B2	0.0100	0.0010	0.1977	0.1498
B1(LH)	ZN(HL)	!A1&A2&!B2	0.0100	0.0010	0.1040	0.0465
B1(LH)	ZN(HL)	A1&!A2&!B2	0.0100	0.0010	0.0827	0.0321
B1(LH)	ZN(HL)	A1&A2&!B2	0.0100	0.0010	0.0715	0.0321
A2(HL)	ZN(LH)	!A1&!B1&B2	0.0100	0.0010	0.1275	0.1085
A2(HL)	ZN(LH)	!A1&B1&!B2	0.0100	0.0010	0.1194	0.0705
A2(HL)	ZN(LH)	!A1&B1&B2	0.0100	0.0010	0.1184	0.0705
A2(LH)	ZN(HL)	!A1&!B1&B2	0.0100	0.0010	0.0955	0.0612
A2(LH)	ZN(HL)	!A1&B1&!B2	0.0100	0.0010	0.0720	0.0467
A2(LH)	ZN(HL)	!A1&B1&B2	0.0100	0.0010	0.0606	0.0360
A1(HL)	ZN(LH)	!A2&!B1&B2	0.0100	0.0010	0.1038	0.1082
A1(HL)	ZN(LH)	!A2&B1&!B2	0.0100	0.0010	0.0955	0.0701
A1(HL)	ZN(LH)	!A2&B1&B2	0.0100	0.0010	0.0943	0.0701
A1(LH)	ZN(HL)	!A2&!B1&B2	0.0100	0.0010	0.0742	0.0463
A1(LH)	ZN(HL)	!A2&B1&!B2	0.0100	0.0010	0.0535	0.0312
A1(LH)	ZN(HL)	!A2&B1&B2	0.0100	0.0010	0.0467	0.0244

DYNAMIC ENERGY

Input Pin	When Condition	Tin (ns)	Output	Out Load (pf)	Energy (uW/MHz)
A1	!A2&!B1&B2	0.0100	ZN(LH)	0.0010	0.4460
A1	!A2&B1&!B2	0.0100	ZN(LH)	0.0010	0.3572
A1	!A2&B1&B2	0.0100	ZN(LH)	0.0010	0.3541
B2	!A1&A2&!B1	0.0100	ZN(LH)	0.0010	0.8121
B2	A1&!A2&!B1	0.0100	ZN(LH)	0.0010	0.7236
B2	A1&A2&!B1	0.0100	ZN(LH)	0.0010	0.7957

continues on next page

Table 227 – continued from previous page

B1	!A1&A2&!B2	0.0100	ZN(LH)	0.0010	0.7228
B1	A1&!A2&!B2	0.0100	ZN(LH)	0.0010	0.6346
B1	A1&A2&!B2	0.0100	ZN(LH)	0.0010	0.7066
A2	!A1&!B1&B2	0.0100	ZN(LH)	0.0010	0.5349
A2	!A1&B1&!B2	0.0100	ZN(LH)	0.0010	0.4461
A2	!A1&B1&B2	0.0100	ZN(LH)	0.0010	0.4437
B1	!A1&A2&!B2	0.0100	ZN(HL)	0.0010	0.0937
B1	A1&!A2&!B2	0.0100	ZN(HL)	0.0010	0.0170
B1	A1&A2&!B2	0.0100	ZN(HL)	0.0010	0.0174
A1	!A2&!B1&B2	0.0100	ZN(HL)	0.0010	0.0928
A1	!A2&B1&!B2	0.0100	ZN(HL)	0.0010	0.0181
A1	!A2&B1&B2	0.0100	ZN(HL)	0.0010	0.0182
B2	!A1&A2&!B1	0.0100	ZN(HL)	0.0010	0.1565
B2	A1&!A2&!B1	0.0100	ZN(HL)	0.0010	0.0826
B2	A1&A2&!B1	0.0100	ZN(HL)	0.0010	0.0823
A2	!A1&!B1&B2	0.0100	ZN(HL)	0.0010	0.1576
A2	!A1&B1&!B2	0.0100	ZN(HL)	0.0010	0.0843
A2	!A1&B1&B2	0.0100	ZN(HL)	0.0010	0.0846
A1(LH)	!A2&!B1&!B2	0.0100	n/a	n/a	0.0606
A1(LH)	A2&!B1&!B2	0.0100	n/a	n/a	-0.1312
A1(LH)	A2&!B1&B2	0.0100	n/a	n/a	-0.0338
A1(LH)	A2&B1&!B2	0.0100	n/a	n/a	-0.0338
A1(LH)	A2&B1&B2	0.0100	n/a	n/a	-0.0338
B2(LH)	!A1&!A2&!B1	0.0100	n/a	n/a	-0.1190
B2(LH)	!A1&!A2&B1	0.0100	n/a	n/a	-0.1154
B2(LH)	!A1&A2&B1	0.0100	n/a	n/a	-0.0996
B2(LH)	A1&!A2&B1	0.0100	n/a	n/a	-0.0995
B2(LH)	A1&A2&B1	0.0100	n/a	n/a	-0.0995
A2(HL)	!A1&!B1&!B2	0.0100	n/a	n/a	0.1339
A2(HL)	A1&!B1&!B2	0.0100	n/a	n/a	0.1381
A2(HL)	A1&!B1&B2	0.0100	n/a	n/a	0.1189
A2(HL)	A1&B1&!B2	0.0100	n/a	n/a	0.1189
A2(HL)	A1&B1&B2	0.0100	n/a	n/a	0.1189
B1(HL)	!A1&!A2&!B2	0.0100	n/a	n/a	0.1336
B1(HL)	!A1&!A2&B2	0.0100	n/a	n/a	0.1195
B1(HL)	!A1&A2&B2	0.0100	n/a	n/a	0.0781
B1(HL)	A1&!A2&B2	0.0100	n/a	n/a	0.0781
B1(HL)	A1&A2&B2	0.0100	n/a	n/a	0.0781
B2(HL)	!A1&!A2&!B1	0.0100	n/a	n/a	0.1330
B2(HL)	!A1&!A2&B1	0.0100	n/a	n/a	0.1190
B2(HL)	!A1&A2&B1	0.0100	n/a	n/a	0.1189
B2(HL)	A1&!A2&B1	0.0100	n/a	n/a	0.1189
B2(HL)	A1&A2&B1	0.0100	n/a	n/a	0.1189
A1(HL)	!A2&!B1&!B2	0.0100	n/a	n/a	0.1344
A1(HL)	A2&!B1&!B2	0.0100	n/a	n/a	0.1382
A1(HL)	A2&!B1&B2	0.0100	n/a	n/a	0.0794
A1(HL)	A2&B1&!B2	0.0100	n/a	n/a	0.0794
A1(HL)	A2&B1&B2	0.0100	n/a	n/a	0.0794
B1(LH)	!A1&!A2&!B2	0.0100	n/a	n/a	-0.1199
B1(LH)	!A1&!A2&B2	0.0100	n/a	n/a	-0.1166
B1(LH)	!A1&A2&B2	0.0100	n/a	n/a	-0.0337
B1(LH)	A1&!A2&B2	0.0100	n/a	n/a	-0.0337

continues on next page

Table 227 – continued from previous page

B1(LH)	A1&A2&B2	0.0100	n/a	n/a	-0.0337
A2(LH)	!A1&!B1&!B2	0.0100	n/a	n/a	0.0618
A2(LH)	A1&!B1&!B2	0.0100	n/a	n/a	-0.1299
A2(LH)	A1&!B1&B2	0.0100	n/a	n/a	-0.0996
A2(LH)	A1&B1&!B2	0.0100	n/a	n/a	-0.0996
A2(LH)	A1&B1&B2	0.0100	n/a	n/a	-0.0995

LEAKAGE POWER

When Condition	Power (nW)
!A1&!A2&!B1&!B2	0.1510
!A1&!A2&!B1&B2	0.1523
!A1&!A2&B1&!B2	0.1523
!A1&!A2&B1&B2	0.1523
!A1&A2&!B1&!B2	0.3105
A1&!A2&!B1&!B2	0.3105
A1&A2&!B1&!B2	0.3113
!A1&A2&!B1&B2	0.2993
!A1&A2&B1&!B2	0.2283
!A1&A2&B1&B2	0.2283
A1&!A2&!B1&B2	0.2283
A1&!A2&B1&!B2	0.1574
A1&!A2&B1&B2	0.1574
A1&A2&!B1&B2	0.2283
A1&A2&B1&!B2	0.1574
A1&A2&B1&B2	0.1574

gf180mcu_fd_sc_mcu9t5v0__oai22_4

gf180mcu_fd_sc_mcu9t5v0__oai22_4 symbol

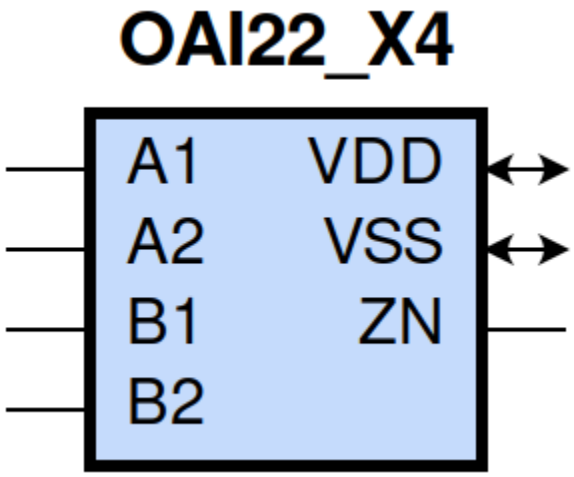

gf180mcu_fd_sc_mcu9t5v0__oai22_4 schematic

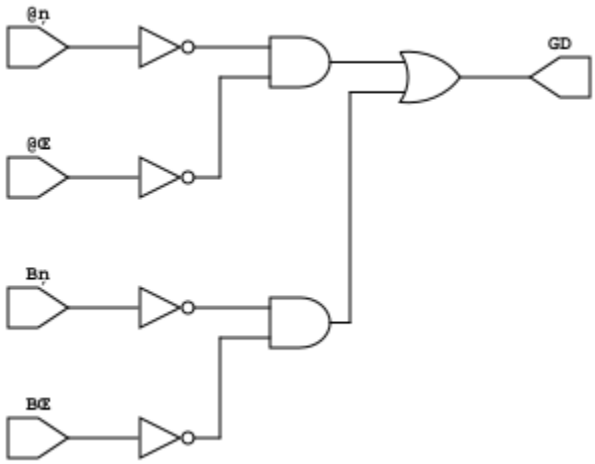

gf180mcu_fd_sc_mcu9t5v0__oai22_4 layout

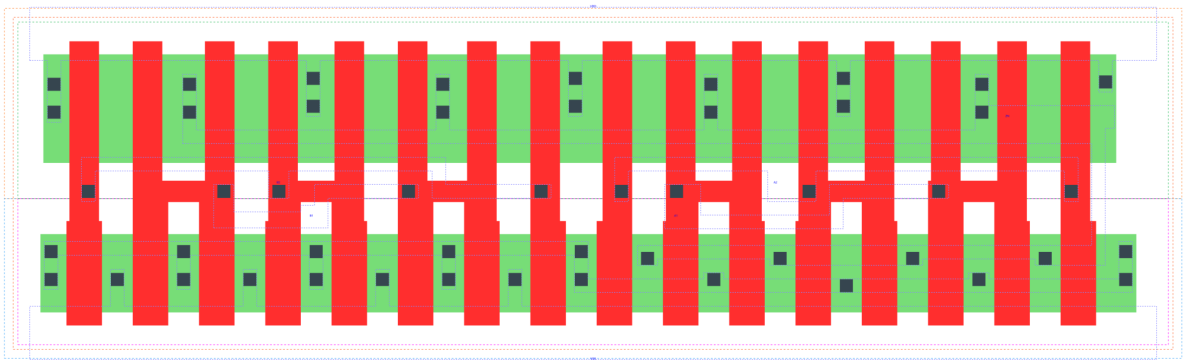

OAI22_X4 is a two 2-input OR into 2-input NAND with 4X drive strength

Attributes

Attribute	Value
area	95.961600 μm^2

OUTPUT FUNCTIONS

Output Pin	Function
ZN	(((!A1)&(!A2))|((!B1)&(!B2)))

TRUTH TABLE FOR ZN

A1	A2	B1	B2	ZN
0	0	?	?	1
?	?	0	0	1
1	?	1	?	0
1	?	?	1	0
?	1	1	?	0
?	1	?	1	0

FUNCTIONAL SCHEMATIC

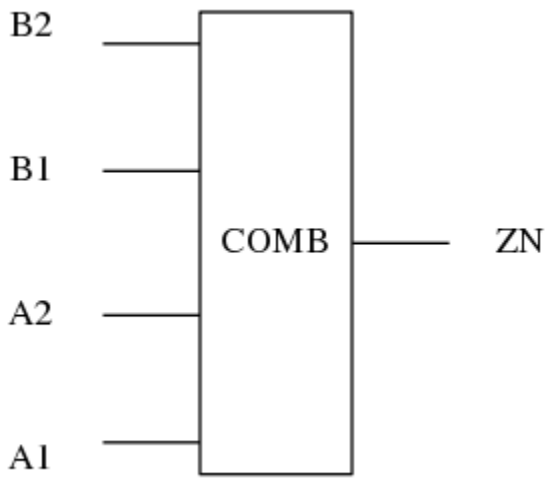

PIN CAPACITANCE (pf)

Pin	Type	Capacitance (pf)
B2	input	0.0274
B1	input	0.0274
A2	input	0.0279
A1	input	0.0280

DELAY AND OUTPUT TRANSITION TIME corresponding to min slew and load

Input Pin	Output	When Condition	Tin (ns)	Out Load (pf)	Delay (ns)	Tout (ns)
B2(HL)	ZN(LH)	!A1&A2&!B1	0.0100	0.0010	0.2039	0.1718
B2(HL)	ZN(LH)	A1&!A2&!B1	0.0100	0.0010	0.1925	0.1284
B2(HL)	ZN(LH)	A1&A2&!B1	0.0100	0.0010	0.2173	0.1465
B2(LH)	ZN(HL)	!A1&A2&!B1	0.0100	0.0010	0.1241	0.0610
B2(LH)	ZN(HL)	A1&!A2&!B1	0.0100	0.0010	0.1002	0.0463
B2(LH)	ZN(HL)	A1&A2&!B1	0.0100	0.0010	0.0841	0.0429
B1(HL)	ZN(LH)	!A1&A2&!B2	0.0100	0.0010	0.1799	0.1716
B1(HL)	ZN(LH)	A1&!A2&!B2	0.0100	0.0010	0.1683	0.1282
B1(HL)	ZN(LH)	A1&A2&!B2	0.0100	0.0010	0.1934	0.1465
B1(LH)	ZN(HL)	!A1&A2&!B2	0.0100	0.0010	0.1025	0.0461
B1(LH)	ZN(HL)	A1&!A2&!B2	0.0100	0.0010	0.0811	0.0317
B1(LH)	ZN(HL)	A1&A2&!B2	0.0100	0.0010	0.0702	0.0315
A2(HL)	ZN(LH)	!A1&!B1&B2	0.0100	0.0010	0.1267	0.1078
A2(HL)	ZN(LH)	!A1&B1&!B2	0.0100	0.0010	0.1186	0.0696
A2(HL)	ZN(LH)	!A1&B1&B2	0.0100	0.0010	0.1175	0.0696
A2(LH)	ZN(HL)	!A1&!B1&B2	0.0100	0.0010	0.0959	0.0612
A2(LH)	ZN(HL)	!A1&B1&!B2	0.0100	0.0010	0.0719	0.0465
A2(LH)	ZN(HL)	!A1&B1&B2	0.0100	0.0010	0.0605	0.0361
A1(HL)	ZN(LH)	!A2&!B1&B2	0.0100	0.0010	0.1024	0.1074
A1(HL)	ZN(LH)	!A2&B1&!B2	0.0100	0.0010	0.0942	0.0691
A1(HL)	ZN(LH)	!A2&B1&B2	0.0100	0.0010	0.0932	0.0691
A1(LH)	ZN(HL)	!A2&!B1&B2	0.0100	0.0010	0.0742	0.0460
A1(LH)	ZN(HL)	!A2&B1&!B2	0.0100	0.0010	0.0532	0.0308
A1(LH)	ZN(HL)	!A2&B1&B2	0.0100	0.0010	0.0464	0.0241

DYNAMIC ENERGY

Input Pin	When Condition	Tin (ns)	Output	Out Load (pf)	Energy (uW/MHz)
A1	!A2&!B1&B2	0.0100	ZN(LH)	0.0010	0.9053
A1	!A2&B1&!B2	0.0100	ZN(LH)	0.0010	0.7272
A1	!A2&B1&B2	0.0100	ZN(LH)	0.0010	0.7212
B2	!A1&A2&!B1	0.0100	ZN(LH)	0.0010	1.6160
B2	A1&!A2&!B1	0.0100	ZN(LH)	0.0010	1.4381
B2	A1&A2&!B1	0.0100	ZN(LH)	0.0010	1.5820
B1	!A1&A2&!B2	0.0100	ZN(LH)	0.0010	1.4368
B1	A1&!A2&!B2	0.0100	ZN(LH)	0.0010	1.2591
B1	A1&A2&!B2	0.0100	ZN(LH)	0.0010	1.4031
A2	!A1&!B1&B2	0.0100	ZN(LH)	0.0010	1.0839
A2	!A1&B1&!B2	0.0100	ZN(LH)	0.0010	0.9059
A2	!A1&B1&B2	0.0100	ZN(LH)	0.0010	0.9010
B1	!A1&A2&!B2	0.0100	ZN(HL)	0.0010	0.1914
B1	A1&!A2&!B2	0.0100	ZN(HL)	0.0010	0.0353

continues on next page

Table 228 – continued from previous page

B1	A1&A2&!B2	0.0100	ZN(HL)	0.0010	0.0363
A1	!A2&!B1&B2	0.0100	ZN(HL)	0.0010	0.1894
A1	!A2&B1&!B2	0.0100	ZN(HL)	0.0010	0.0379
A1	!A2&B1&B2	0.0100	ZN(HL)	0.0010	0.0376
B2	!A1&A2&!B1	0.0100	ZN(HL)	0.0010	0.3196
B2	A1&!A2&!B1	0.0100	ZN(HL)	0.0010	0.1694
B2	A1&A2&!B1	0.0100	ZN(HL)	0.0010	0.1689
A2	!A1&!B1&B2	0.0100	ZN(HL)	0.0010	0.3218
A2	!A1&B1&!B2	0.0100	ZN(HL)	0.0010	0.1729
A2	!A1&B1&B2	0.0100	ZN(HL)	0.0010	0.1732
A1(LH)	!A2&!B1&!B2	0.0100	n/a	n/a	0.0988
A1(LH)	A2&!B1&!B2	0.0100	n/a	n/a	-0.2622
A1(LH)	A2&!B1&B2	0.0100	n/a	n/a	-0.0676
A1(LH)	A2&B1&!B2	0.0100	n/a	n/a	-0.0678
A1(LH)	A2&B1&B2	0.0100	n/a	n/a	-0.0676
B2(LH)	!A1&!A2&!B1	0.0100	n/a	n/a	-0.2377
B2(LH)	!A1&!A2&B1	0.0100	n/a	n/a	-0.2306
B2(LH)	!A1&A2&B1	0.0100	n/a	n/a	-0.1992
B2(LH)	A1&!A2&B1	0.0100	n/a	n/a	-0.1992
B2(LH)	A1&A2&B1	0.0100	n/a	n/a	-0.1988
A2(HL)	!A1&!B1&!B2	0.0100	n/a	n/a	0.2676
A2(HL)	A1&!B1&!B2	0.0100	n/a	n/a	0.2776
A2(HL)	A1&!B1&B2	0.0100	n/a	n/a	0.2381
A2(HL)	A1&B1&!B2	0.0100	n/a	n/a	0.2381
A2(HL)	A1&B1&B2	0.0100	n/a	n/a	0.2382
B1(HL)	!A1&!A2&!B2	0.0100	n/a	n/a	0.2679
B1(HL)	!A1&!A2&B2	0.0100	n/a	n/a	0.2388
B1(HL)	!A1&A2&B2	0.0100	n/a	n/a	0.1589
B1(HL)	A1&!A2&B2	0.0100	n/a	n/a	0.1587
B1(HL)	A1&A2&B2	0.0100	n/a	n/a	0.1589
B2(HL)	!A1&!A2&!B1	0.0100	n/a	n/a	0.2672
B2(HL)	!A1&!A2&B1	0.0100	n/a	n/a	0.2384
B2(HL)	!A1&A2&B1	0.0100	n/a	n/a	0.2382
B2(HL)	A1&!A2&B1	0.0100	n/a	n/a	0.2382
B2(HL)	A1&A2&B1	0.0100	n/a	n/a	0.2382
A1(HL)	!A2&!B1&!B2	0.0100	n/a	n/a	0.2684
A1(HL)	A2&!B1&!B2	0.0100	n/a	n/a	0.2776
A1(HL)	A2&!B1&B2	0.0100	n/a	n/a	0.1612
A1(HL)	A2&B1&!B2	0.0100	n/a	n/a	0.1611
A1(HL)	A2&B1&B2	0.0100	n/a	n/a	0.1611
B1(LH)	!A1&!A2&!B2	0.0100	n/a	n/a	-0.2395
B1(LH)	!A1&!A2&B2	0.0100	n/a	n/a	-0.2331
B1(LH)	!A1&A2&B2	0.0100	n/a	n/a	-0.0674
B1(LH)	A1&!A2&B2	0.0100	n/a	n/a	-0.0674
B1(LH)	A1&A2&B2	0.0100	n/a	n/a	-0.0675
A2(LH)	!A1&!B1&!B2	0.0100	n/a	n/a	0.1007
A2(LH)	A1&!B1&!B2	0.0100	n/a	n/a	-0.2600
A2(LH)	A1&!B1&B2	0.0100	n/a	n/a	-0.1990
A2(LH)	A1&B1&!B2	0.0100	n/a	n/a	-0.1991
A2(LH)	A1&B1&B2	0.0100	n/a	n/a	-0.1990

LEAKAGE POWER

When Condition	Power (nW)
!A1&!A2&!B1&!B2	0.2520
!A1&!A2&!B1&B2	0.2547
!A1&!A2&B1&!B2	0.2547
!A1&!A2&B1&B2	0.2547
!A1&A2&!B1&!B2	0.5710
A1&!A2&!B1&!B2	0.5710
A1&A2&!B1&!B2	0.5726
!A1&A2&!B1&B2	0.5485
!A1&A2&B1&!B2	0.4067
!A1&A2&B1&B2	0.4067
A1&!A2&!B1&B2	0.4067
A1&!A2&B1&!B2	0.2649
A1&!A2&B1&B2	0.2649
A1&A2&!B1&B2	0.4067
A1&A2&B1&!B2	0.2649
A1&A2&B1&B2	0.2649

gf180mcu_fd_sc_mcu9t5v0__oai221_1

gf180mcu_fd_sc_mcu9t5v0__oai221_1 symbol

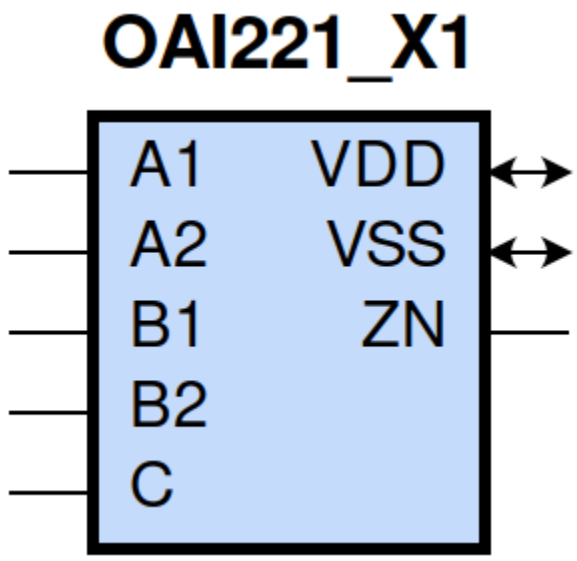

gf180mcu_fd_sc_mcu9t5v0__oai221_1 schematic

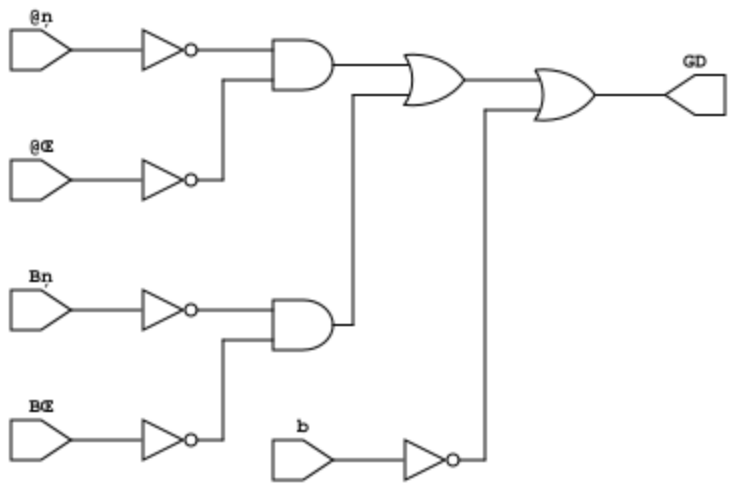

gf180mcu_fd_sc_mcu9t5v0__oai221_1 layout

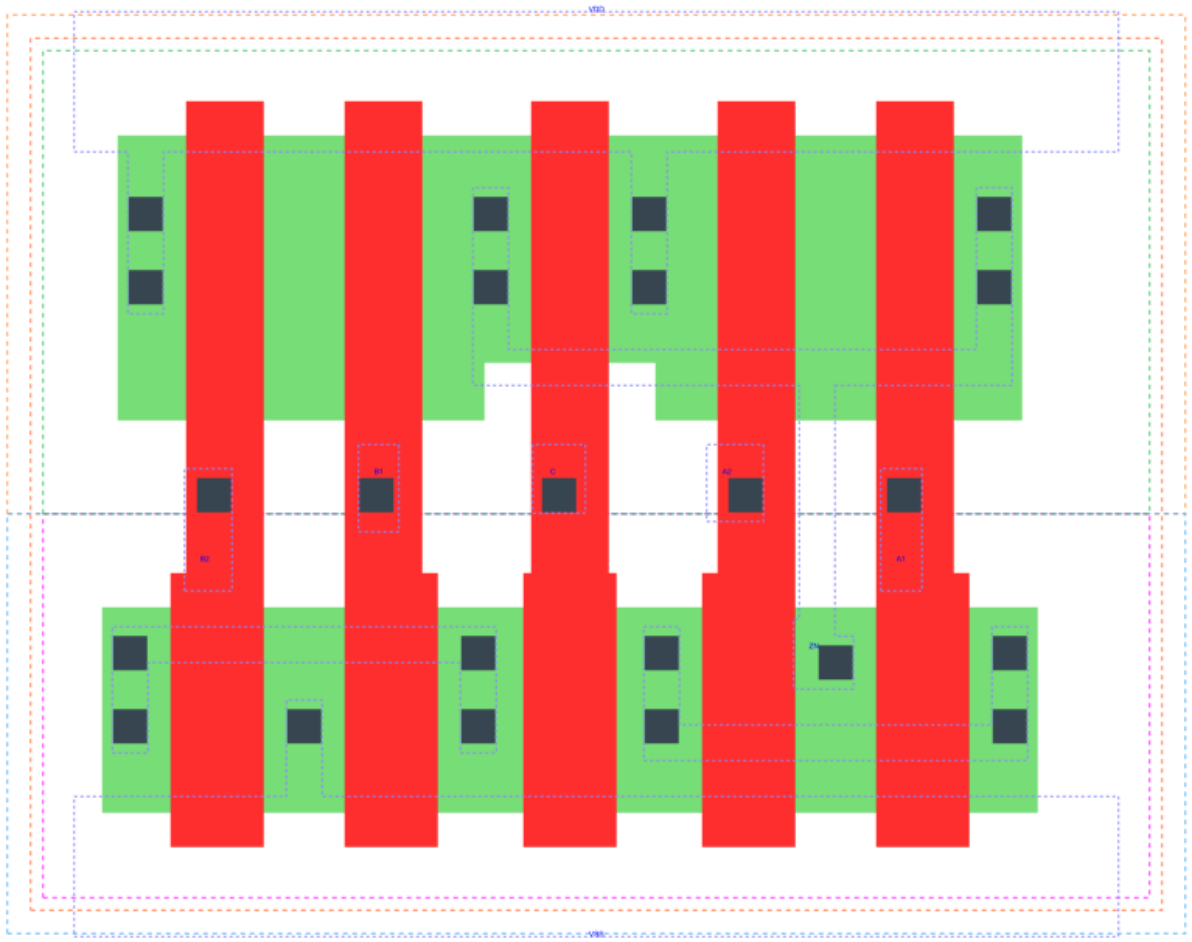

OAI221_X1 is a two 2-input OR into 3-input NAND with 1X drive strength

Attributes

Attribute	Value
area	33.868800 μm^2

OUTPUT FUNCTIONS

Output Pin	Function
ZN	(((!A1)&(!A2))|((!B1)&(!B2))|(!C))

TRUTH TABLE FOR ZN

A1	A2	B1	B2	C	ZN
0	0	?	?	?	1
?	?	0	0	?	1
?	?	?	?	0	1
1	?	1	?	1	0
1	?	?	1	1	0
?	1	1	?	1	0
?	1	?	1	1	0

FUNCTIONAL SCHEMATIC

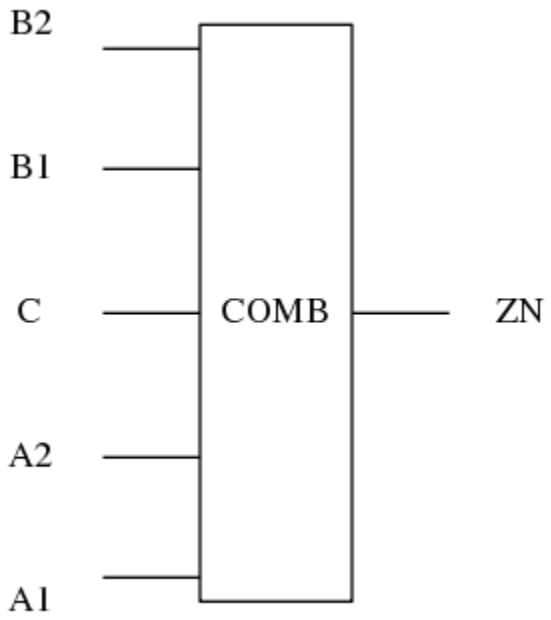

PIN CAPACITANCE (pf)

Pin	Type	Capacitance (pf)
B2	input	0.0065
B1	input	0.0067
C	input	0.0062
A2	input	0.0067
A1	input	0.0068

DELAY AND OUTPUT TRANSITION TIME corresponding to min slew and load

Input Pin	Output	When Condition	Tin (ns)	Out Load (pf)	Delay (ns)	Tout (ns)
B2(HL)	ZN(LH)	!A1&A2&!B1&C	0.0100	0.0010	0.2693	0.2286
B2(HL)	ZN(LH)	A1&!A2&!B1&C	0.0100	0.0010	0.2551	0.1832
B2(HL)	ZN(LH)	A1&A2&!B1&C	0.0100	0.0010	0.2837	0.2027
B2(LH)	ZN(HL)	!A1&A2&!B1&C	0.0100	0.0010	0.1962	0.1001
B2(LH)	ZN(HL)	A1&!A2&!B1&C	0.0100	0.0010	0.1643	0.0796
B2(LH)	ZN(HL)	A1&A2&!B1&C	0.0100	0.0010	0.1459	0.0805
B1(HL)	ZN(LH)	!A1&A2&!B2&C	0.0100	0.0010	0.2460	0.2287
B1(HL)	ZN(LH)	A1&!A2&!B2&C	0.0100	0.0010	0.2319	0.1833
B1(HL)	ZN(LH)	A1&A2&!B2&C	0.0100	0.0010	0.2605	0.2028
B1(LH)	ZN(HL)	!A1&A2&!B2&C	0.0100	0.0010	0.1672	0.0794

continues on next page

Table 229 – continued from previous page

B1(LH)	ZN(HL)	A1&!A2&!B2&C	0.0100	0.0010	0.1371	0.0590
B1(LH)	ZN(HL)	A1&A2&!B2&C	0.0100	0.0010	0.1236	0.0623
C(HL)	ZN(LH)	!A1&A2&!B1&B2	0.0100	0.0010	0.1414	0.1461
C(HL)	ZN(LH)	!A1&A2&B1&!B2	0.0100	0.0010	0.1338	0.1169
C(HL)	ZN(LH)	!A1&A2&B1&B2	0.0100	0.0010	0.1326	0.1168
C(HL)	ZN(LH)	A1&!A2&!B1&B2	0.0100	0.0010	0.1338	0.1170
C(HL)	ZN(LH)	A1&!A2&B1&!B2	0.0100	0.0010	0.1270	0.0901
C(HL)	ZN(LH)	A1&!A2&B1&B2	0.0100	0.0010	0.1257	0.0901
C(HL)	ZN(LH)	A1&A2&!B1&B2	0.0100	0.0010	0.1510	0.1294
C(HL)	ZN(LH)	A1&A2&B1&!B2	0.0100	0.0010	0.1441	0.1025
C(HL)	ZN(LH)	A1&A2&B1&B2	0.0100	0.0010	0.1430	0.1026
C(LH)	ZN(HL)	!A1&A2&!B1&B2	0.0100	0.0010	0.1731	0.1003
C(LH)	ZN(HL)	!A1&A2&B1&!B2	0.0100	0.0010	0.1408	0.0794
C(LH)	ZN(HL)	!A1&A2&B1&B2	0.0100	0.0010	0.1224	0.0654
C(LH)	ZN(HL)	A1&!A2&!B1&B2	0.0100	0.0010	0.1411	0.0799
C(LH)	ZN(HL)	A1&!A2&B1&!B2	0.0100	0.0010	0.1109	0.0588
C(LH)	ZN(HL)	A1&!A2&B1&B2	0.0100	0.0010	0.0973	0.0483
C(LH)	ZN(HL)	A1&A2&!B1&B2	0.0100	0.0010	0.1229	0.0804
C(LH)	ZN(HL)	A1&A2&B1&!B2	0.0100	0.0010	0.0980	0.0622
C(LH)	ZN(HL)	A1&A2&B1&B2	0.0100	0.0010	0.0846	0.0479
A2(HL)	ZN(LH)	!A1&!B1&B2&C	0.0100	0.0010	0.1501	0.1281
A2(HL)	ZN(LH)	!A1&B1&!B2&C	0.0100	0.0010	0.1415	0.0892
A2(HL)	ZN(LH)	!A1&B1&B2&C	0.0100	0.0010	0.1413	0.0892
A2(LH)	ZN(HL)	!A1&!B1&B2&C	0.0100	0.0010	0.1368	0.1001
A2(LH)	ZN(HL)	!A1&B1&!B2&C	0.0100	0.0010	0.1046	0.0790
A2(LH)	ZN(HL)	!A1&B1&B2&C	0.0100	0.0010	0.0949	0.0657
A1(HL)	ZN(LH)	!A2&!B1&B2&C	0.0100	0.0010	0.1269	0.1278
A1(HL)	ZN(LH)	!A2&B1&!B2&C	0.0100	0.0010	0.1182	0.0890
A1(HL)	ZN(LH)	!A2&B1&B2&C	0.0100	0.0010	0.1179	0.0891
A1(LH)	ZN(HL)	!A2&!B1&B2&C	0.0100	0.0010	0.1080	0.0791
A1(LH)	ZN(HL)	!A2&B1&!B2&C	0.0100	0.0010	0.0781	0.0570
A1(LH)	ZN(HL)	!A2&B1&B2&C	0.0100	0.0010	0.0725	0.0478

DYNAMIC ENERGY

Input Pin	When Condition	Tin (ns)	Output	Out Load (pf)	Energy (uW/MHz)
C	!A1&A2&!B1&B2	0.0100	ZN(LH)	0.0010	0.3770
C	!A1&A2&B1&!B2	0.0100	ZN(LH)	0.0010	0.3327
C	!A1&A2&B1&B2	0.0100	ZN(LH)	0.0010	0.3308
C	A1&!A2&!B1&B2	0.0100	ZN(LH)	0.0010	0.3330
C	A1&!A2&B1&!B2	0.0100	ZN(LH)	0.0010	0.2885
C	A1&!A2&B1&B2	0.0100	ZN(LH)	0.0010	0.2868
C	A1&A2&!B1&B2	0.0100	ZN(LH)	0.0010	0.3694
C	A1&A2&B1&!B2	0.0100	ZN(LH)	0.0010	0.3249
C	A1&A2&B1&B2	0.0100	ZN(LH)	0.0010	0.3231
C	!A1&A2&!B1&B2	0.0100	ZN(HL)	0.0010	0.1154
C	!A1&A2&B1&!B2	0.0100	ZN(HL)	0.0010	0.0795

continues on next page

Table 230 – continued from previous page

C	!A1&A2&B1&B2	0.0100	ZN(HL)	0.0010	0.0795
C	A1&!A2&!B1&B2	0.0100	ZN(HL)	0.0010	0.0796
C	A1&!A2&B1&!B2	0.0100	ZN(HL)	0.0010	0.0435
C	A1&!A2&B1&B2	0.0100	ZN(HL)	0.0010	0.0434
C	A1&A2&!B1&B2	0.0100	ZN(HL)	0.0010	0.0796
C	A1&A2&B1&!B2	0.0100	ZN(HL)	0.0010	0.0435
C	A1&A2&B1&B2	0.0100	ZN(HL)	0.0010	0.0434
A1	!A2&!B1&B2&C	0.0100	ZN(LH)	0.0010	0.2323
A1	!A2&B1&!B2&C	0.0100	ZN(LH)	0.0010	0.1879
A1	!A2&B1&B2&C	0.0100	ZN(LH)	0.0010	0.1877
B2	!A1&A2&!B1&C	0.0100	ZN(LH)	0.0010	0.4907
B2	A1&!A2&!B1&C	0.0100	ZN(LH)	0.0010	0.4467
B2	A1&A2&!B1&C	0.0100	ZN(LH)	0.0010	0.4817
B1	!A1&A2&!B2&C	0.0100	ZN(LH)	0.0010	0.4464
B1	A1&!A2&!B2&C	0.0100	ZN(LH)	0.0010	0.4025
B1	A1&A2&!B2&C	0.0100	ZN(LH)	0.0010	0.4377
A2	!A1&!B1&B2&C	0.0100	ZN(LH)	0.0010	0.2766
A2	!A1&B1&!B2&C	0.0100	ZN(LH)	0.0010	0.2323
A2	!A1&B1&B2&C	0.0100	ZN(LH)	0.0010	0.2321
B1	!A1&A2&!B2&C	0.0100	ZN(HL)	0.0010	0.0762
B1	A1&!A2&!B2&C	0.0100	ZN(HL)	0.0010	0.0398
B1	A1&A2&!B2&C	0.0100	ZN(HL)	0.0010	0.0398
A1	!A2&!B1&B2&C	0.0100	ZN(HL)	0.0010	0.0764
A1	!A2&B1&!B2&C	0.0100	ZN(HL)	0.0010	0.0401
A1	!A2&B1&B2&C	0.0100	ZN(HL)	0.0010	0.0401
B2	!A1&A2&!B1&C	0.0100	ZN(HL)	0.0010	0.1063
B2	A1&!A2&!B1&C	0.0100	ZN(HL)	0.0010	0.0705
B2	A1&A2&!B1&C	0.0100	ZN(HL)	0.0010	0.0705
A2	!A1&!B1&B2&C	0.0100	ZN(HL)	0.0010	0.1067
A2	!A1&B1&!B2&C	0.0100	ZN(HL)	0.0010	0.0709
A2	!A1&B1&B2&C	0.0100	ZN(HL)	0.0010	0.0709
A1(LH)	!A2&!B1&!B2&!C	0.0100	n/a	n/a	0.0023
A1(LH)	!A2&!B1&!B2&C	0.0100	n/a	n/a	0.1093
A1(LH)	!A2&!B1&B2&!C	0.0100	n/a	n/a	0.0024
A1(LH)	!A2&B1&!B2&!C	0.0100	n/a	n/a	0.0024
A1(LH)	!A2&B1&B2&!C	0.0100	n/a	n/a	0.0024
A1(LH)	A2&!B1&!B2&!C	0.0100	n/a	n/a	-0.0658
A1(LH)	A2&!B1&!B2&C	0.0100	n/a	n/a	-0.0656
A1(LH)	A2&!B1&B2&!C	0.0100	n/a	n/a	-0.0657
A1(LH)	A2&B1&!B2&!C	0.0100	n/a	n/a	-0.0657
A1(LH)	A2&B1&B2&!C	0.0100	n/a	n/a	-0.0657
A1(LH)	A2&!B1&B2&C	0.0100	n/a	n/a	-0.0169
A1(LH)	A2&B1&!B2&C	0.0100	n/a	n/a	-0.0169
A1(LH)	A2&B1&B2&C	0.0100	n/a	n/a	-0.0169
C(HL)	!A1&!A2&!B1&!B2	0.0100	n/a	n/a	0.0688
C(HL)	!A1&!A2&!B1&B2	0.0100	n/a	n/a	0.0606
C(HL)	!A1&!A2&B1&!B2	0.0100	n/a	n/a	0.0606
C(HL)	!A1&!A2&B1&B2	0.0100	n/a	n/a	0.0589
C(HL)	!A1&A2&!B1&!B2	0.0100	n/a	n/a	0.0521
C(HL)	A1&!A2&!B1&!B2	0.0100	n/a	n/a	0.0522
C(HL)	A1&A2&!B1&!B2	0.0100	n/a	n/a	0.0520
B2(LH)	!A1&!A2&!B1&!C	0.0100	n/a	n/a	-0.0596

continues on next page

Table 230 – continued from previous page

B2(LH)	!A1&!A2&!B1&C	0.0100	n/a	n/a	-0.0596
B2(LH)	!A1&!A2&B1&!C	0.0100	n/a	n/a	-0.0577
B2(LH)	!A1&!A2&B1&C	0.0100	n/a	n/a	-0.0577
B2(LH)	!A1&A2&!B1&!C	0.0100	n/a	n/a	-0.0596
B2(LH)	!A1&A2&B1&!C	0.0100	n/a	n/a	-0.0577
B2(LH)	A1&!A2&!B1&!C	0.0100	n/a	n/a	-0.0596
B2(LH)	A1&!A2&B1&!C	0.0100	n/a	n/a	-0.0577
B2(LH)	A1&A2&!B1&!C	0.0100	n/a	n/a	-0.0596
B2(LH)	A1&A2&B1&!C	0.0100	n/a	n/a	-0.0577
B2(LH)	!A1&A2&B1&C	0.0100	n/a	n/a	-0.0498
B2(LH)	A1&!A2&B1&C	0.0100	n/a	n/a	-0.0498
B2(LH)	A1&A2&B1&C	0.0100	n/a	n/a	-0.0498
A2(HL)	!A1&!B1&!B2&!C	0.0100	n/a	n/a	0.0670
A2(HL)	!A1&!B1&!B2&C	0.0100	n/a	n/a	0.0670
A2(HL)	!A1&!B1&B2&!C	0.0100	n/a	n/a	0.0670
A2(HL)	!A1&B1&!B2&!C	0.0100	n/a	n/a	0.0670
A2(HL)	!A1&B1&B2&!C	0.0100	n/a	n/a	0.0670
A2(HL)	A1&!B1&!B2&!C	0.0100	n/a	n/a	0.0706
A2(HL)	A1&!B1&!B2&C	0.0100	n/a	n/a	0.0702
A2(HL)	A1&!B1&B2&!C	0.0100	n/a	n/a	0.0706
A2(HL)	A1&B1&!B2&!C	0.0100	n/a	n/a	0.0705
A2(HL)	A1&B1&B2&!C	0.0100	n/a	n/a	0.0705
A2(HL)	A1&!B1&B2&C	0.0100	n/a	n/a	0.0595
A2(HL)	A1&B1&!B2&C	0.0100	n/a	n/a	0.0595
A2(HL)	A1&B1&B2&C	0.0100	n/a	n/a	0.0595
B1(HL)	!A1&!A2&!B2&!C	0.0100	n/a	n/a	0.0601
B1(HL)	!A1&!A2&!B2&C	0.0100	n/a	n/a	0.0613
B1(HL)	!A1&!A2&B2&!C	0.0100	n/a	n/a	0.0599
B1(HL)	!A1&!A2&B2&C	0.0100	n/a	n/a	0.0600
B1(HL)	!A1&A2&!B2&!C	0.0100	n/a	n/a	0.0618
B1(HL)	!A1&A2&B2&!C	0.0100	n/a	n/a	0.0600
B1(HL)	A1&!A2&!B2&!C	0.0100	n/a	n/a	0.0619
B1(HL)	A1&!A2&B2&!C	0.0100	n/a	n/a	0.0600
B1(HL)	A1&A2&!B2&!C	0.0100	n/a	n/a	0.0618
B1(HL)	A1&A2&B2&!C	0.0100	n/a	n/a	0.0599
B1(HL)	!A1&A2&B2&C	0.0100	n/a	n/a	0.0384
B1(HL)	A1&!A2&B2&C	0.0100	n/a	n/a	0.0384
B1(HL)	A1&A2&B2&C	0.0100	n/a	n/a	0.0384
B2(HL)	!A1&!A2&!B1&!C	0.0100	n/a	n/a	0.0599
B2(HL)	!A1&!A2&!B1&C	0.0100	n/a	n/a	0.0611
B2(HL)	!A1&!A2&B1&!C	0.0100	n/a	n/a	0.0596
B2(HL)	!A1&!A2&B1&C	0.0100	n/a	n/a	0.0596
B2(HL)	!A1&A2&!B1&!C	0.0100	n/a	n/a	0.0615
B2(HL)	!A1&A2&B1&!C	0.0100	n/a	n/a	0.0596
B2(HL)	A1&!A2&!B1&!C	0.0100	n/a	n/a	0.0615
B2(HL)	A1&!A2&B1&!C	0.0100	n/a	n/a	0.0596
B2(HL)	A1&A2&!B1&!C	0.0100	n/a	n/a	0.0614
B2(HL)	A1&A2&B1&!C	0.0100	n/a	n/a	0.0596
B2(HL)	!A1&A2&B1&C	0.0100	n/a	n/a	0.0596
B2(HL)	A1&!A2&B1&C	0.0100	n/a	n/a	0.0596
B2(HL)	A1&A2&B1&C	0.0100	n/a	n/a	0.0596
A1(HL)	!A2&!B1&!B2&!C	0.0100	n/a	n/a	0.0673

continues on next page

Table 230 – continued from previous page

A1(HL)	!A2&!B1&!B2&C	0.0100	n/a	n/a	0.0673
A1(HL)	!A2&!B1&B2&!C	0.0100	n/a	n/a	0.0673
A1(HL)	!A2&B1&!B2&!C	0.0100	n/a	n/a	0.0673
A1(HL)	!A2&B1&B2&!C	0.0100	n/a	n/a	0.0673
A1(HL)	A2&!B1&!B2&!C	0.0100	n/a	n/a	0.0708
A1(HL)	A2&!B1&!B2&C	0.0100	n/a	n/a	0.0705
A1(HL)	A2&!B1&B2&!C	0.0100	n/a	n/a	0.0708
A1(HL)	A2&B1&!B2&!C	0.0100	n/a	n/a	0.0708
A1(HL)	A2&B1&B2&!C	0.0100	n/a	n/a	0.0708
A1(HL)	A2&!B1&B2&C	0.0100	n/a	n/a	0.0384
A1(HL)	A2&B1&!B2&C	0.0100	n/a	n/a	0.0384
A1(HL)	A2&B1&B2&C	0.0100	n/a	n/a	0.0384
B1(LH)	!A1&!A2&!B2&!C	0.0100	n/a	n/a	-0.0600
B1(LH)	!A1&!A2&!B2&C	0.0100	n/a	n/a	-0.0601
B1(LH)	!A1&!A2&B2&!C	0.0100	n/a	n/a	-0.0585
B1(LH)	!A1&!A2&B2&C	0.0100	n/a	n/a	-0.0583
B1(LH)	!A1&A2&!B2&!C	0.0100	n/a	n/a	-0.0600
B1(LH)	!A1&A2&B2&!C	0.0100	n/a	n/a	-0.0584
B1(LH)	A1&!A2&!B2&!C	0.0100	n/a	n/a	-0.0601
B1(LH)	A1&!A2&B2&!C	0.0100	n/a	n/a	-0.0584
B1(LH)	A1&A2&!B2&!C	0.0100	n/a	n/a	-0.0601
B1(LH)	A1&A2&B2&!C	0.0100	n/a	n/a	-0.0584
B1(LH)	!A1&A2&B2&C	0.0100	n/a	n/a	-0.0168
B1(LH)	A1&!A2&B2&C	0.0100	n/a	n/a	-0.0168
B1(LH)	A1&A2&B2&C	0.0100	n/a	n/a	-0.0168
C(LH)	!A1&!A2&!B1&!B2	0.0100	n/a	n/a	-0.0477
C(LH)	!A1&!A2&!B1&B2	0.0100	n/a	n/a	-0.0475
C(LH)	!A1&!A2&B1&!B2	0.0100	n/a	n/a	-0.0475
C(LH)	!A1&!A2&B1&B2	0.0100	n/a	n/a	-0.0476
C(LH)	!A1&A2&!B1&!B2	0.0100	n/a	n/a	0.0060
C(LH)	A1&!A2&!B1&!B2	0.0100	n/a	n/a	0.0060
C(LH)	A1&A2&!B1&!B2	0.0100	n/a	n/a	0.0060
A2(LH)	!A1&!B1&!B2&!C	0.0100	n/a	n/a	0.0028
A2(LH)	!A1&!B1&!B2&C	0.0100	n/a	n/a	0.1100
A2(LH)	!A1&!B1&B2&!C	0.0100	n/a	n/a	0.0028
A2(LH)	!A1&B1&!B2&!C	0.0100	n/a	n/a	0.0028
A2(LH)	!A1&B1&B2&!C	0.0100	n/a	n/a	0.0028
A2(LH)	A1&!B1&!B2&!C	0.0100	n/a	n/a	-0.0650
A2(LH)	A1&!B1&!B2&C	0.0100	n/a	n/a	-0.0650
A2(LH)	A1&!B1&B2&!C	0.0100	n/a	n/a	-0.0650
A2(LH)	A1&B1&!B2&!C	0.0100	n/a	n/a	-0.0650
A2(LH)	A1&B1&B2&!C	0.0100	n/a	n/a	-0.0650
A2(LH)	A1&!B1&B2&C	0.0100	n/a	n/a	-0.0499
A2(LH)	A1&B1&!B2&C	0.0100	n/a	n/a	-0.0499
A2(LH)	A1&B1&B2&C	0.0100	n/a	n/a	-0.0499

LEAKAGE POWER

When Condition	Power (nW)
!A1&!A2&!B1&!B2&!C	0.1004
!A1&!A2&!B1&!B2&C	0.1006
!A1&!A2&!B1&B2&!C	0.1004
!A1&!A2&!B1&B2&C	0.1012
!A1&!A2&B1&!B2&!C	0.1004
!A1&!A2&B1&!B2&C	0.1012
!A1&!A2&B1&B2&!C	0.1004
!A1&!A2&B1&B2&C	0.1012
!A1&A2&!B1&!B2&!C	0.1600
!A1&A2&!B1&!B2&C	0.2190
!A1&A2&!B1&B2&!C	0.1602
!A1&A2&B1&!B2&!C	0.1602
!A1&A2&B1&B2&!C	0.1602
A1&!A2&!B1&!B2&!C	0.1600
A1&!A2&!B1&!B2&C	0.2190
A1&!A2&!B1&B2&!C	0.1602
A1&!A2&B1&!B2&!C	0.1602
A1&!A2&B1&B2&!C	0.1602
A1&A2&!B1&!B2&!C	0.1603
A1&A2&!B1&!B2&C	0.2193
A1&A2&!B1&B2&!C	0.1605
A1&A2&B1&!B2&!C	0.1605
A1&A2&B1&B2&!C	0.1605
!A1&A2&!B1&B2&C	0.2013
!A1&A2&B1&!B2&C	0.1658
!A1&A2&B1&B2&C	0.1658
A1&!A2&!B1&B2&C	0.1658
A1&!A2&B1&!B2&C	0.1304
A1&!A2&B1&B2&C	0.1304
A1&A2&!B1&B2&C	0.1658
A1&A2&B1&!B2&C	0.1304
A1&A2&B1&B2&C	0.1304

gf180mcu_fd_sc_mcu9t5v0__oai221_2

gf180mcu_fd_sc_mcu9t5v0__oai221_2 symbol

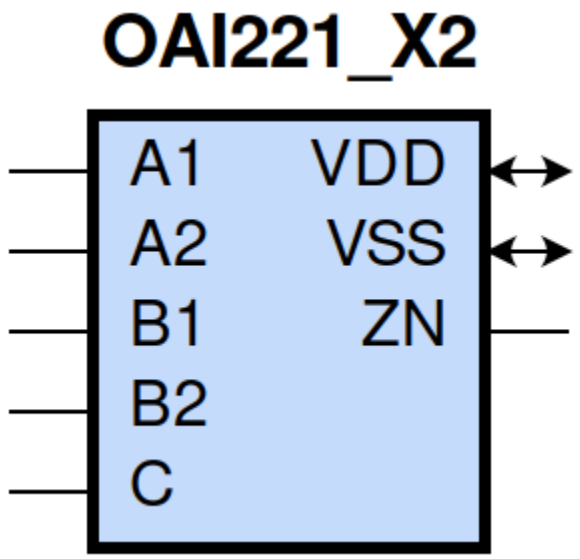

gf180mcu_fd_sc_mcu9t5v0__oai221_2 schematic

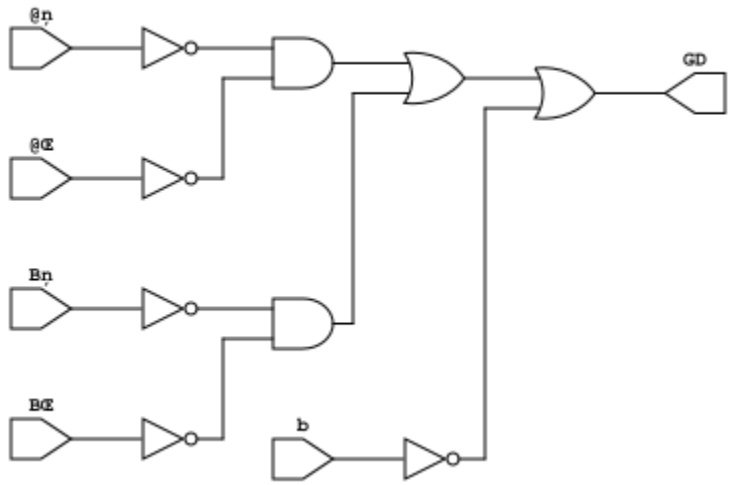

gf180mcu_fd_sc_mcu9t5v0__oai221_2 layout

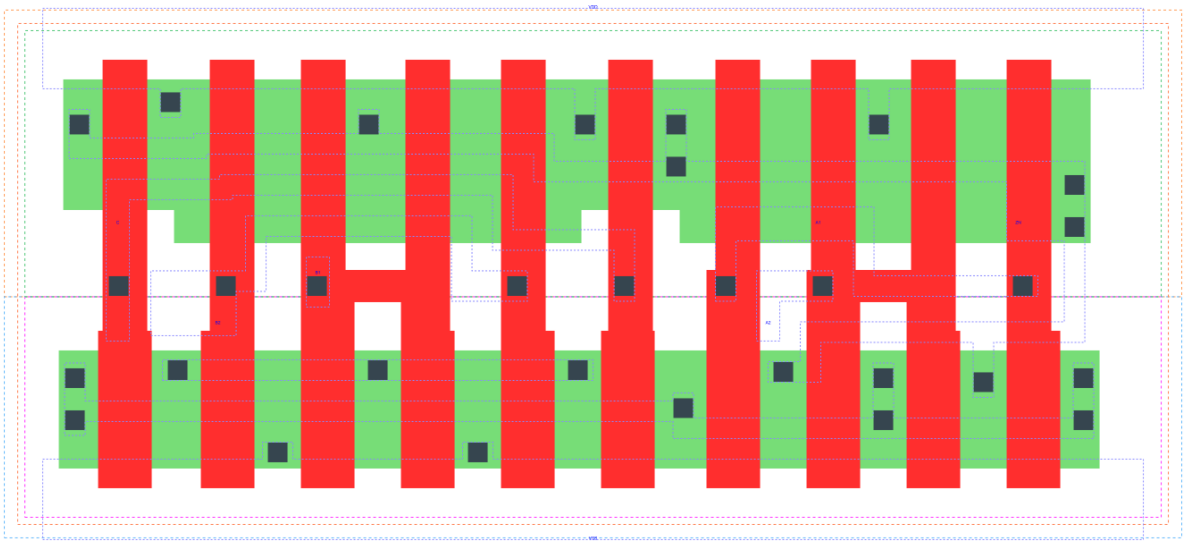

OAI221_X2 is a two 2-input OR into 3-input NAND with 2X drive strength

Attributes

Attribute	Value
area	62.092800 μm^2

OUTPUT FUNCTIONS

Output Pin	Function
ZN	(((!A1)&(!A2))|((!B1)&(!B2))|(!C))

TRUTH TABLE FOR ZN

A1	A2	B1	B2	C	ZN
0	0	?	?	?	1
?	?	0	0	?	1
?	?	?	?	0	1
1	?	1	?	1	0
1	?	?	1	1	0
?	1	1	?	1	0
?	1	?	1	1	0

FUNCTIONAL SCHEMATIC

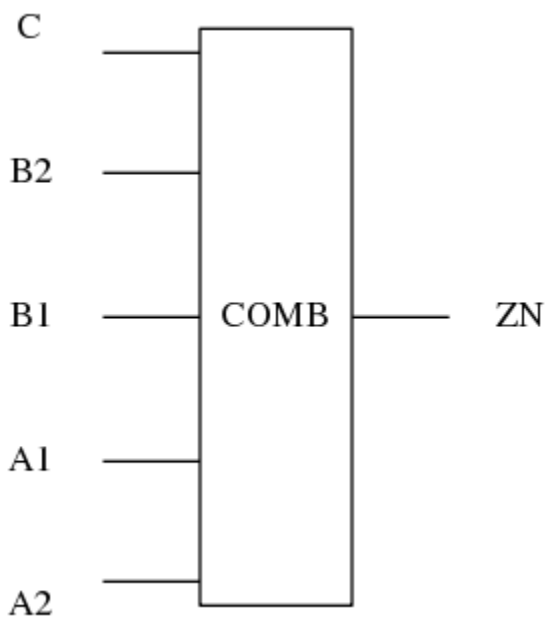

PIN CAPACITANCE (pf)

Pin	Type	Capacitance (pf)
C	input	0.0137
B2	input	0.0139
B1	input	0.0132
A1	input	0.0143
A2	input	0.0133

DELAY AND OUTPUT TRANSITION TIME corresponding to min slew and load

Input Pin	Output	When Condition	Tin (ns)	Out Load (pf)	Delay (ns)	Tout (ns)
C(HL)	ZN(LH)	!A1&A2&!B1&B2	0.0100	0.0010	0.1463	0.1510
C(HL)	ZN(LH)	!A1&A2&B1&!B2	0.0100	0.0010	0.1384	0.1214
C(HL)	ZN(LH)	!A1&A2&B1&B2	0.0100	0.0010	0.1372	0.1212
C(HL)	ZN(LH)	A1&!A2&!B1&B2	0.0100	0.0010	0.1384	0.1211
C(HL)	ZN(LH)	A1&!A2&B1&!B2	0.0100	0.0010	0.1312	0.0935
C(HL)	ZN(LH)	A1&!A2&B1&B2	0.0100	0.0010	0.1299	0.0934
C(HL)	ZN(LH)	A1&A2&!B1&B2	0.0100	0.0010	0.1561	0.1336
C(HL)	ZN(LH)	A1&A2&B1&!B2	0.0100	0.0010	0.1492	0.1062
C(HL)	ZN(LH)	A1&A2&B1&B2	0.0100	0.0010	0.1478	0.1062
C(LH)	ZN(HL)	!A1&A2&!B1&B2	0.0100	0.0010	0.1774	0.1009
C(LH)	ZN(HL)	!A1&A2&B1&!B2	0.0100	0.0010	0.1453	0.0806
C(LH)	ZN(HL)	!A1&A2&B1&B2	0.0100	0.0010	0.1260	0.0661
C(LH)	ZN(HL)	A1&!A2&!B1&B2	0.0100	0.0010	0.1446	0.0798
C(LH)	ZN(HL)	A1&!A2&B1&!B2	0.0100	0.0010	0.1146	0.0594
C(LH)	ZN(HL)	A1&!A2&B1&B2	0.0100	0.0010	0.1001	0.0483
C(LH)	ZN(HL)	A1&A2&!B1&B2	0.0100	0.0010	0.1261	0.0815
C(LH)	ZN(HL)	A1&A2&B1&!B2	0.0100	0.0010	0.1013	0.0636
C(LH)	ZN(HL)	A1&A2&B1&B2	0.0100	0.0010	0.0871	0.0485
B2(HL)	ZN(LH)	!A1&A2&!B1&C	0.0100	0.0010	0.2706	0.2306
B2(HL)	ZN(LH)	A1&!A2&!B1&C	0.0100	0.0010	0.2564	0.1842
B2(HL)	ZN(LH)	A1&A2&!B1&C	0.0100	0.0010	0.2851	0.2040
B2(LH)	ZN(HL)	!A1&A2&!B1&C	0.0100	0.0010	0.1980	0.1008
B2(LH)	ZN(HL)	A1&!A2&!B1&C	0.0100	0.0010	0.1653	0.0801
B2(LH)	ZN(HL)	A1&A2&!B1&C	0.0100	0.0010	0.1465	0.0816
B1(HL)	ZN(LH)	!A1&A2&!B2&C	0.0100	0.0010	0.2471	0.2306
B1(HL)	ZN(LH)	A1&!A2&!B2&C	0.0100	0.0010	0.2329	0.1843
B1(HL)	ZN(LH)	A1&A2&!B2&C	0.0100	0.0010	0.2616	0.2041
B1(LH)	ZN(HL)	!A1&A2&!B2&C	0.0100	0.0010	0.1692	0.0803
B1(LH)	ZN(HL)	A1&!A2&!B2&C	0.0100	0.0010	0.1382	0.0590
B1(LH)	ZN(HL)	A1&A2&!B2&C	0.0100	0.0010	0.1243	0.0635
A1(HL)	ZN(LH)	!A2&!B1&B2&C	0.0100	0.0010	0.1257	0.1274
A1(HL)	ZN(LH)	!A2&B1&!B2&C	0.0100	0.0010	0.1171	0.0886
A1(HL)	ZN(LH)	!A2&B1&B2&C	0.0100	0.0010	0.1168	0.0886
A1(LH)	ZN(HL)	!A2&!B1&B2&C	0.0100	0.0010	0.1063	0.0789
A1(LH)	ZN(HL)	!A2&B1&!B2&C	0.0100	0.0010	0.0764	0.0566
A1(LH)	ZN(HL)	!A2&B1&B2&C	0.0100	0.0010	0.0712	0.0473
A2(HL)	ZN(LH)	!A1&!B1&B2&C	0.0100	0.0010	0.1500	0.1278
A2(HL)	ZN(LH)	!A1&B1&!B2&C	0.0100	0.0010	0.1413	0.0888
A2(HL)	ZN(LH)	!A1&B1&B2&C	0.0100	0.0010	0.1412	0.0888
A2(LH)	ZN(HL)	!A1&!B1&B2&C	0.0100	0.0010	0.1359	0.1006
A2(LH)	ZN(HL)	!A1&B1&!B2&C	0.0100	0.0010	0.1037	0.0798
A2(LH)	ZN(HL)	!A1&B1&B2&C	0.0100	0.0010	0.0942	0.0661

DYNAMIC ENERGY

Input Pin	When Condition	Tin (ns)	Output	Out Load (pf)	Energy (uW/MHz)

continues on next page

Table 233 – continued from previous page

C	!A1&A2&!B1&B2	0.0100	ZN(LH)	0.0010	0.8093
C	!A1&A2&B1&!B2	0.0100	ZN(LH)	0.0010	0.7209
C	!A1&A2&B1&B2	0.0100	ZN(LH)	0.0010	0.7168
C	A1&!A2&!B1&B2	0.0100	ZN(LH)	0.0010	0.7205
C	A1&!A2&B1&!B2	0.0100	ZN(LH)	0.0010	0.6319
C	A1&!A2&B1&B2	0.0100	ZN(LH)	0.0010	0.6274
C	A1&A2&!B1&B2	0.0100	ZN(LH)	0.0010	0.7930
C	A1&A2&B1&!B2	0.0100	ZN(LH)	0.0010	0.7045
C	A1&A2&B1&B2	0.0100	ZN(LH)	0.0010	0.7003
C	!A1&A2&!B1&B2	0.0100	ZN(HL)	0.0010	0.2302
C	!A1&A2&B1&!B2	0.0100	ZN(HL)	0.0010	0.1572
C	!A1&A2&B1&B2	0.0100	ZN(HL)	0.0010	0.1570
C	A1&!A2&!B1&B2	0.0100	ZN(HL)	0.0010	0.1557
C	A1&!A2&B1&!B2	0.0100	ZN(HL)	0.0010	0.0827
C	A1&!A2&B1&B2	0.0100	ZN(HL)	0.0010	0.0824
C	A1&A2&!B1&B2	0.0100	ZN(HL)	0.0010	0.1560
C	A1&A2&B1&!B2	0.0100	ZN(HL)	0.0010	0.0824
C	A1&A2&B1&B2	0.0100	ZN(HL)	0.0010	0.0824
A1	!A2&!B1&B2&C	0.0100	ZN(LH)	0.0010	0.4894
A1	!A2&B1&!B2&C	0.0100	ZN(LH)	0.0010	0.4008
A1	!A2&B1&B2&C	0.0100	ZN(LH)	0.0010	0.4005
B2	!A1&A2&!B1&C	0.0100	ZN(LH)	0.0010	1.0143
B2	A1&!A2&!B1&C	0.0100	ZN(LH)	0.0010	0.9254
B2	A1&A2&!B1&C	0.0100	ZN(LH)	0.0010	0.9954
B1	!A1&A2&!B2&C	0.0100	ZN(LH)	0.0010	0.9255
B1	A1&!A2&!B2&C	0.0100	ZN(LH)	0.0010	0.8367
B1	A1&A2&!B2&C	0.0100	ZN(LH)	0.0010	0.9072
A2	!A1&!B1&B2&C	0.0100	ZN(LH)	0.0010	0.5790
A2	!A1&B1&!B2&C	0.0100	ZN(LH)	0.0010	0.4905
A2	!A1&B1&B2&C	0.0100	ZN(LH)	0.0010	0.4901
B1	!A1&A2&!B2&C	0.0100	ZN(HL)	0.0010	0.1503
B1	A1&!A2&!B2&C	0.0100	ZN(HL)	0.0010	0.0750
B1	A1&A2&!B2&C	0.0100	ZN(HL)	0.0010	0.0750
A1	!A2&!B1&B2&C	0.0100	ZN(HL)	0.0010	0.1496
A1	!A2&B1&!B2&C	0.0100	ZN(HL)	0.0010	0.0757
A1	!A2&B1&B2&C	0.0100	ZN(HL)	0.0010	0.0756
B2	!A1&A2&!B1&C	0.0100	ZN(HL)	0.0010	0.2120
B2	A1&!A2&!B1&C	0.0100	ZN(HL)	0.0010	0.1383
B2	A1&A2&!B1&C	0.0100	ZN(HL)	0.0010	0.1382
A2	!A1&!B1&B2&C	0.0100	ZN(HL)	0.0010	0.2130
A2	!A1&B1&!B2&C	0.0100	ZN(HL)	0.0010	0.1404
A2	!A1&B1&B2&C	0.0100	ZN(HL)	0.0010	0.1401
A1(LH)	!A2&!B1&!B2&!C	0.0100	n/a	n/a	0.0324
A1(LH)	!A2&!B1&!B2&C	0.0100	n/a	n/a	0.2256
A1(LH)	!A2&!B1&B2&!C	0.0100	n/a	n/a	0.0325
A1(LH)	!A2&B1&!B2&!C	0.0100	n/a	n/a	0.0325
A1(LH)	!A2&B1&B2&!C	0.0100	n/a	n/a	0.0324
A1(LH)	A2&!B1&!B2&!C	0.0100	n/a	n/a	-0.1314
A1(LH)	A2&!B1&!B2&C	0.0100	n/a	n/a	-0.1310
A1(LH)	A2&!B1&B2&!C	0.0100	n/a	n/a	-0.1311
A1(LH)	A2&B1&!B2&!C	0.0100	n/a	n/a	-0.1312
A1(LH)	A2&B1&B2&!C	0.0100	n/a	n/a	-0.1312

continues on next page

Table 233 – continued from previous page

A1(LH)	A2&!B1&B2&C	0.0100	n/a	n/a	-0.0337
A1(LH)	A2&B1&!B2&C	0.0100	n/a	n/a	-0.0337
A1(LH)	A2&B1&B2&C	0.0100	n/a	n/a	-0.0337
C(HL)	!A1&!A2&!B1&!B2	0.0100	n/a	n/a	0.1382
C(HL)	!A1&!A2&!B1&B2	0.0100	n/a	n/a	0.1211
C(HL)	!A1&!A2&B1&!B2	0.0100	n/a	n/a	0.1212
C(HL)	!A1&!A2&B1&B2	0.0100	n/a	n/a	0.1174
C(HL)	!A1&A2&!B1&!B2	0.0100	n/a	n/a	0.1024
C(HL)	A1&!A2&!B1&!B2	0.0100	n/a	n/a	0.1025
C(HL)	A1&A2&!B1&!B2	0.0100	n/a	n/a	0.1023
B2(LH)	!A1&!A2&!B1&!C	0.0100	n/a	n/a	-0.1189
B2(LH)	!A1&!A2&!B1&C	0.0100	n/a	n/a	-0.1189
B2(LH)	!A1&!A2&B1&!C	0.0100	n/a	n/a	-0.1154
B2(LH)	!A1&!A2&B1&C	0.0100	n/a	n/a	-0.1153
B2(LH)	!A1&A2&!B1&!C	0.0100	n/a	n/a	-0.1190
B2(LH)	!A1&A2&B1&!C	0.0100	n/a	n/a	-0.1154
B2(LH)	A1&!A2&!B1&!C	0.0100	n/a	n/a	-0.1189
B2(LH)	A1&!A2&B1&!C	0.0100	n/a	n/a	-0.1153
B2(LH)	A1&A2&!B1&!C	0.0100	n/a	n/a	-0.1189
B2(LH)	A1&A2&B1&!C	0.0100	n/a	n/a	-0.1153
B2(LH)	!A1&A2&B1&C	0.0100	n/a	n/a	-0.0996
B2(LH)	A1&!A2&B1&C	0.0100	n/a	n/a	-0.0996
B2(LH)	A1&A2&B1&C	0.0100	n/a	n/a	-0.0996
A2(HL)	!A1&!B1&!B2&!C	0.0100	n/a	n/a	0.1339
A2(HL)	!A1&!B1&!B2&C	0.0100	n/a	n/a	0.1340
A2(HL)	!A1&!B1&B2&!C	0.0100	n/a	n/a	0.1339
A2(HL)	!A1&B1&!B2&!C	0.0100	n/a	n/a	0.1339
A2(HL)	!A1&B1&B2&!C	0.0100	n/a	n/a	0.1339
A2(HL)	A1&!B1&!B2&!C	0.0100	n/a	n/a	0.1392
A2(HL)	A1&!B1&!B2&C	0.0100	n/a	n/a	0.1391
A2(HL)	A1&!B1&B2&!C	0.0100	n/a	n/a	0.1393
A2(HL)	A1&B1&!B2&!C	0.0100	n/a	n/a	0.1393
A2(HL)	A1&B1&B2&!C	0.0100	n/a	n/a	0.1393
A2(HL)	A1&!B1&B2&C	0.0100	n/a	n/a	0.1191
A2(HL)	A1&B1&!B2&C	0.0100	n/a	n/a	0.1191
A2(HL)	A1&B1&B2&C	0.0100	n/a	n/a	0.1191
B1(HL)	!A1&!A2&!B2&!C	0.0100	n/a	n/a	0.1200
B1(HL)	!A1&!A2&!B2&C	0.0100	n/a	n/a	0.1221
B1(HL)	!A1&!A2&B2&!C	0.0100	n/a	n/a	0.1196
B1(HL)	!A1&!A2&B2&C	0.0100	n/a	n/a	0.1196
B1(HL)	!A1&A2&!B2&!C	0.0100	n/a	n/a	0.1224
B1(HL)	!A1&A2&B2&!C	0.0100	n/a	n/a	0.1197
B1(HL)	A1&!A2&!B2&!C	0.0100	n/a	n/a	0.1224
B1(HL)	A1&!A2&B2&!C	0.0100	n/a	n/a	0.1196
B1(HL)	A1&A2&!B2&!C	0.0100	n/a	n/a	0.1222
B1(HL)	A1&A2&B2&!C	0.0100	n/a	n/a	0.1196
B1(HL)	!A1&A2&B2&C	0.0100	n/a	n/a	0.0781
B1(HL)	A1&!A2&B2&C	0.0100	n/a	n/a	0.0781
B1(HL)	A1&A2&B2&C	0.0100	n/a	n/a	0.0781
B2(HL)	!A1&!A2&!B1&!C	0.0100	n/a	n/a	0.1193
B2(HL)	!A1&!A2&!B1&C	0.0100	n/a	n/a	0.1214
B2(HL)	!A1&!A2&B1&!C	0.0100	n/a	n/a	0.1189

continues on next page

Table 233 – continued from previous page

B2(HL)	!A1&!A2&B1&C	0.0100	n/a	n/a	0.1189
B2(HL)	!A1&A2&!B1&!C	0.0100	n/a	n/a	0.1217
B2(HL)	!A1&A2&B1&!C	0.0100	n/a	n/a	0.1189
B2(HL)	A1&!A2&!B1&!C	0.0100	n/a	n/a	0.1217
B2(HL)	A1&!A2&B1&!C	0.0100	n/a	n/a	0.1189
B2(HL)	A1&A2&!B1&!C	0.0100	n/a	n/a	0.1216
B2(HL)	A1&A2&B1&!C	0.0100	n/a	n/a	0.1189
B2(HL)	!A1&A2&B1&C	0.0100	n/a	n/a	0.1189
B2(HL)	A1&!A2&B1&C	0.0100	n/a	n/a	0.1189
B2(HL)	A1&A2&B1&C	0.0100	n/a	n/a	0.1189
A1(HL)	!A2&!B1&!B2&!C	0.0100	n/a	n/a	0.1344
A1(HL)	!A2&!B1&!B2&C	0.0100	n/a	n/a	0.1345
A1(HL)	!A2&!B1&B2&!C	0.0100	n/a	n/a	0.1344
A1(HL)	!A2&B1&!B2&!C	0.0100	n/a	n/a	0.1345
A1(HL)	!A2&B1&B2&!C	0.0100	n/a	n/a	0.1345
A1(HL)	A2&!B1&!B2&!C	0.0100	n/a	n/a	0.1394
A1(HL)	A2&!B1&!B2&C	0.0100	n/a	n/a	0.1392
A1(HL)	A2&!B1&B2&!C	0.0100	n/a	n/a	0.1395
A1(HL)	A2&B1&!B2&!C	0.0100	n/a	n/a	0.1394
A1(HL)	A2&B1&B2&!C	0.0100	n/a	n/a	0.1393
A1(HL)	A2&!B1&B2&C	0.0100	n/a	n/a	0.0793
A1(HL)	A2&B1&!B2&C	0.0100	n/a	n/a	0.0793
A1(HL)	A2&B1&B2&C	0.0100	n/a	n/a	0.0793
B1(LH)	!A1&!A2&!B2&!C	0.0100	n/a	n/a	-0.1198
B1(LH)	!A1&!A2&!B2&C	0.0100	n/a	n/a	-0.1199
B1(LH)	!A1&!A2&B2&!C	0.0100	n/a	n/a	-0.1169
B1(LH)	!A1&!A2&B2&C	0.0100	n/a	n/a	-0.1166
B1(LH)	!A1&A2&!B2&!C	0.0100	n/a	n/a	-0.1198
B1(LH)	!A1&A2&B2&!C	0.0100	n/a	n/a	-0.1167
B1(LH)	A1&!A2&!B2&!C	0.0100	n/a	n/a	-0.1198
B1(LH)	A1&!A2&B2&!C	0.0100	n/a	n/a	-0.1167
B1(LH)	A1&A2&!B2&!C	0.0100	n/a	n/a	-0.1198
B1(LH)	A1&A2&B2&!C	0.0100	n/a	n/a	-0.1168
B1(LH)	!A1&A2&B2&C	0.0100	n/a	n/a	-0.0337
B1(LH)	A1&!A2&B2&C	0.0100	n/a	n/a	-0.0337
B1(LH)	A1&A2&B2&C	0.0100	n/a	n/a	-0.0337
C(LH)	!A1&!A2&!B1&!B2	0.0100	n/a	n/a	-0.0951
C(LH)	!A1&!A2&!B1&B2	0.0100	n/a	n/a	-0.0948
C(LH)	!A1&!A2&B1&!B2	0.0100	n/a	n/a	-0.0948
C(LH)	!A1&!A2&B1&B2	0.0100	n/a	n/a	-0.0948
C(LH)	!A1&A2&!B1&!B2	0.0100	n/a	n/a	-0.0108
C(LH)	A1&!A2&!B1&!B2	0.0100	n/a	n/a	-0.0108
C(LH)	A1&A2&!B1&!B2	0.0100	n/a	n/a	-0.0108
A2(LH)	!A1&!B1&!B2&!C	0.0100	n/a	n/a	0.0333
A2(LH)	!A1&!B1&!B2&C	0.0100	n/a	n/a	0.2266
A2(LH)	!A1&!B1&B2&!C	0.0100	n/a	n/a	0.0334
A2(LH)	!A1&B1&!B2&!C	0.0100	n/a	n/a	0.0334
A2(LH)	!A1&B1&B2&!C	0.0100	n/a	n/a	0.0334
A2(LH)	A1&!B1&!B2&!C	0.0100	n/a	n/a	-0.1300
A2(LH)	A1&!B1&!B2&C	0.0100	n/a	n/a	-0.1299
A2(LH)	A1&!B1&B2&!C	0.0100	n/a	n/a	-0.1300
A2(LH)	A1&B1&!B2&!C	0.0100	n/a	n/a	-0.1300

continues on next page

Table 233 – continued from previous page

A2(LH)	A1&B1&B2&!C	0.0100	n/a	n/a	-0.1300
A2(LH)	A1&!B1&B2&C	0.0100	n/a	n/a	-0.0997
A2(LH)	A1&B1&!B2&C	0.0100	n/a	n/a	-0.0997
A2(LH)	A1&B1&B2&C	0.0100	n/a	n/a	-0.0997

LEAKAGE POWER

When Condition	Power (nW)
!A1&!A2&!B1&!B2&!C	0.1509
!A1&!A2&!B1&!B2&C	0.1512
!A1&!A2&!B1&B2&!C	0.1509
!A1&!A2&!B1&B2&C	0.1523
!A1&!A2&B1&!B2&!C	0.1509
!A1&!A2&B1&!B2&C	0.1523
!A1&!A2&B1&B2&!C	0.1509
!A1&!A2&B1&B2&C	0.1523
!A1&A2&!B1&!B2&!C	0.2704
!A1&A2&!B1&!B2&C	0.3884
!A1&A2&!B1&B2&!C	0.2707
!A1&A2&B1&!B2&!C	0.2707
!A1&A2&B1&B2&!C	0.2708
A1&!A2&!B1&!B2&!C	0.2704
A1&!A2&!B1&!B2&C	0.3884
A1&!A2&!B1&B2&!C	0.2707
A1&!A2&B1&!B2&!C	0.2708
A1&!A2&B1&B2&!C	0.2708
A1&A2&!B1&!B2&!C	0.2710
A1&A2&!B1&!B2&C	0.3890
A1&A2&!B1&B2&!C	0.2713
A1&A2&B1&!B2&!C	0.2713
A1&A2&B1&B2&!C	0.2713
!A1&A2&!B1&B2&C	0.3525
!A1&A2&B1&!B2&C	0.2816
!A1&A2&B1&B2&C	0.2816
A1&!A2&!B1&B2&C	0.2816
A1&!A2&B1&!B2&C	0.2107
A1&!A2&B1&B2&C	0.2107
A1&A2&!B1&B2&C	0.2816
A1&A2&B1&!B2&C	0.2107
A1&A2&B1&B2&C	0.2107

gf180mcu_fd_sc_mcu9t5v0__oai221_4

gf180mcu_fd_sc_mcu9t5v0__oai221_4 symbol

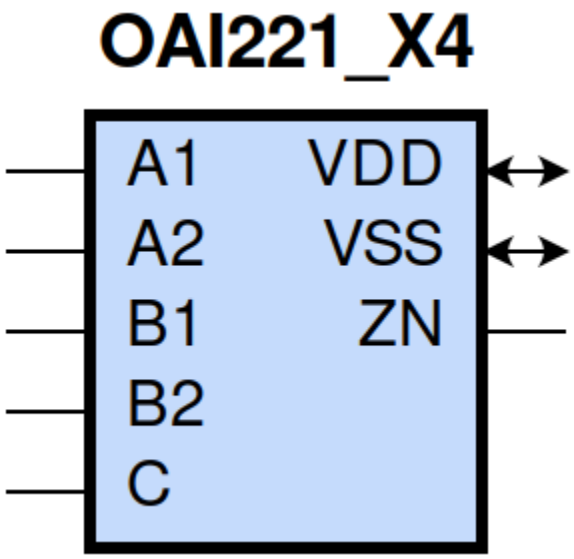

gf180mcu_fd_sc_mcu9t5v0__oai221_4 schematic

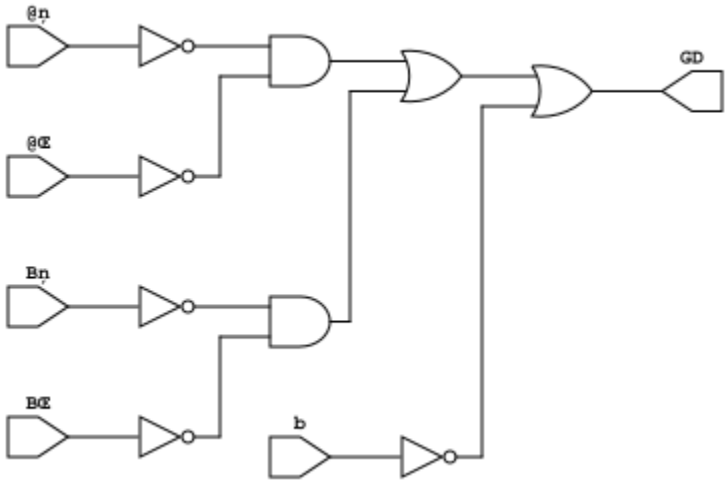

gf180mcu_fd_sc_mcu9t5v0__oai221_4 layout

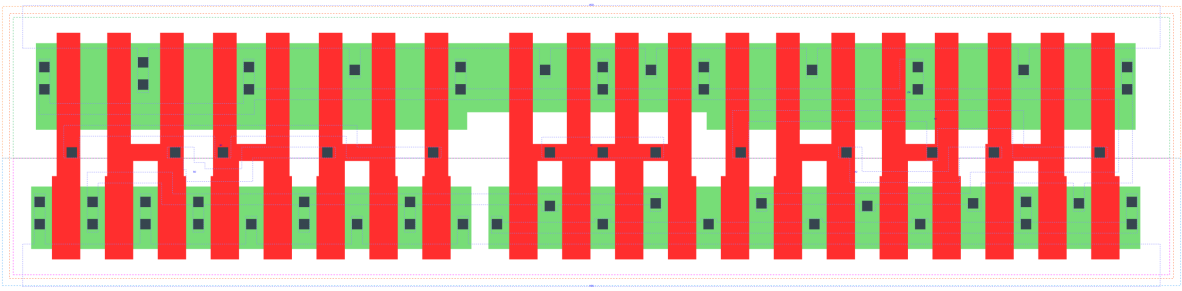

OAI221_X4 is a two 2-input OR into 3-input NAND with 4X drive strength

Attributes

Attribute	Value
area	121.363200 μm^2

OUTPUT FUNCTIONS

Output Pin	Function
ZN	(((!A1)&(!A2))|((!B1)&(!B2))|(!C))

TRUTH TABLE FOR ZN

A1	A2	B1	B2	C	ZN
0	0	?	?	?	1
?	?	0	0	?	1
?	?	?	?	0	1
1	?	1	?	1	0
1	?	?	1	1	0
?	1	1	?	1	0
?	1	?	1	1	0

FUNCTIONAL SCHEMATIC

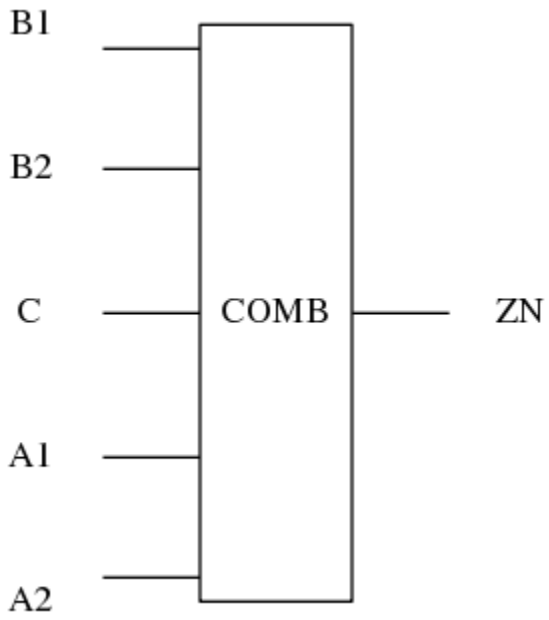

PIN CAPACITANCE (pf)

Pin	Type	Capacitance (pf)
B1	input	0.0281
B2	input	0.0264
C	input	0.0238
A1	input	0.0286
A2	input	0.0267

DELAY AND OUTPUT TRANSITION TIME corresponding to min slew and load

Input Pin	Output	When Condition	Tin (ns)	Out Load (pf)	Delay (ns)	Tout (ns)
B1(HL)	ZN(LH)	!A1&A2&!B2&C	0.0100	0.0010	0.2358	0.2220
B1(HL)	ZN(LH)	A1&!A2&!B2&C	0.0100	0.0010	0.2216	0.1758
B1(HL)	ZN(LH)	A1&A2&!B2&C	0.0100	0.0010	0.2499	0.1950
B1(LH)	ZN(HL)	!A1&A2&!B2&C	0.0100	0.0010	0.1631	0.0778
B1(LH)	ZN(HL)	A1&!A2&!B2&C	0.0100	0.0010	0.1320	0.0562
B1(LH)	ZN(HL)	A1&A2&!B2&C	0.0100	0.0010	0.1193	0.0601
B2(HL)	ZN(LH)	!A1&A2&!B1&C	0.0100	0.0010	0.2604	0.2219
B2(HL)	ZN(LH)	A1&!A2&!B1&C	0.0100	0.0010	0.2462	0.1754
B2(HL)	ZN(LH)	A1&A2&!B1&C	0.0100	0.0010	0.2746	0.1949
B2(LH)	ZN(HL)	!A1&A2&!B1&C	0.0100	0.0010	0.1930	0.0990

continues on next page

Table 235 – continued from previous page

B2(LH)	ZN(HL)	A1&!A2&!B1&C	0.0100	0.0010	0.1602	0.0781
B2(LH)	ZN(HL)	A1&A2&!B1&C	0.0100	0.0010	0.1423	0.0790
C(HL)	ZN(LH)	!A1&A2&!B1&B2	0.0100	0.0010	0.1374	0.1440
C(HL)	ZN(LH)	!A1&A2&B1&!B2	0.0100	0.0010	0.1298	0.1139
C(HL)	ZN(LH)	!A1&A2&B1&B2	0.0100	0.0010	0.1286	0.1139
C(HL)	ZN(LH)	A1&!A2&!B1&B2	0.0100	0.0010	0.1298	0.1140
C(HL)	ZN(LH)	A1&!A2&B1&!B2	0.0100	0.0010	0.1229	0.0866
C(HL)	ZN(LH)	A1&!A2&B1&B2	0.0100	0.0010	0.1219	0.0867
C(HL)	ZN(LH)	A1&A2&!B1&B2	0.0100	0.0010	0.1470	0.1266
C(HL)	ZN(LH)	A1&A2&B1&!B2	0.0100	0.0010	0.1402	0.0991
C(HL)	ZN(LH)	A1&A2&B1&B2	0.0100	0.0010	0.1389	0.0991
C(LH)	ZN(HL)	!A1&A2&!B1&B2	0.0100	0.0010	0.1716	0.0990
C(LH)	ZN(HL)	!A1&A2&B1&!B2	0.0100	0.0010	0.1384	0.0775
C(LH)	ZN(HL)	!A1&A2&B1&B2	0.0100	0.0010	0.1203	0.0639
C(LH)	ZN(HL)	A1&!A2&!B1&B2	0.0100	0.0010	0.1385	0.0777
C(LH)	ZN(HL)	A1&!A2&B1&!B2	0.0100	0.0010	0.1078	0.0562
C(LH)	ZN(HL)	A1&!A2&B1&B2	0.0100	0.0010	0.0946	0.0461
C(LH)	ZN(HL)	A1&A2&!B1&B2	0.0100	0.0010	0.1210	0.0789
C(LH)	ZN(HL)	A1&A2&B1&!B2	0.0100	0.0010	0.0956	0.0602
C(LH)	ZN(HL)	A1&A2&B1&B2	0.0100	0.0010	0.0825	0.0462
A1(HL)	ZN(LH)	!A2&!B1&B2&C	0.0100	0.0010	0.1215	0.1244
A1(HL)	ZN(LH)	!A2&B1&!B2&C	0.0100	0.0010	0.1129	0.0848
A1(HL)	ZN(LH)	!A2&B1&B2&C	0.0100	0.0010	0.1127	0.0847
A1(LH)	ZN(HL)	!A2&!B1&B2&C	0.0100	0.0010	0.1060	0.0774
A1(LH)	ZN(HL)	!A2&B1&!B2&C	0.0100	0.0010	0.0755	0.0543
A1(LH)	ZN(HL)	!A2&B1&B2&C	0.0100	0.0010	0.0701	0.0455
A2(HL)	ZN(LH)	!A1&!B1&B2&C	0.0100	0.0010	0.1458	0.1246
A2(HL)	ZN(LH)	!A1&B1&!B2&C	0.0100	0.0010	0.1371	0.0851
A2(HL)	ZN(LH)	!A1&B1&B2&C	0.0100	0.0010	0.1370	0.0850
A2(LH)	ZN(HL)	!A1&!B1&B2&C	0.0100	0.0010	0.1360	0.0988
A2(LH)	ZN(HL)	!A1&B1&!B2&C	0.0100	0.0010	0.1029	0.0772
A2(LH)	ZN(HL)	!A1&B1&B2&C	0.0100	0.0010	0.0932	0.0642

DYNAMIC ENERGY

Input Pin	When Condition	Tin (ns)	Output	Out Load (pf)	Energy (uW/MHz)
C	!A1&A2&!B1&B2	0.0100	ZN(LH)	0.0010	1.5467
C	!A1&A2&B1&!B2	0.0100	ZN(LH)	0.0010	1.3686
C	!A1&A2&B1&B2	0.0100	ZN(LH)	0.0010	1.3607
C	A1&!A2&!B1&B2	0.0100	ZN(LH)	0.0010	1.3694
C	A1&!A2&B1&!B2	0.0100	ZN(LH)	0.0010	1.1907
C	A1&!A2&B1&B2	0.0100	ZN(LH)	0.0010	1.1826
C	A1&A2&!B1&B2	0.0100	ZN(LH)	0.0010	1.5145
C	A1&A2&B1&!B2	0.0100	ZN(LH)	0.0010	1.3353
C	A1&A2&B1&B2	0.0100	ZN(LH)	0.0010	1.3282
C	!A1&A2&!B1&B2	0.0100	ZN(HL)	0.0010	0.4618
C	!A1&A2&B1&!B2	0.0100	ZN(HL)	0.0010	0.3092

continues on next page

Table 236 – continued from previous page

C	!A1&A2&B1&B2	0.0100	ZN(HL)	0.0010	0.3092
C	A1&!A2&!B1&B2	0.0100	ZN(HL)	0.0010	0.3117
C	A1&!A2&B1&!B2	0.0100	ZN(HL)	0.0010	0.1586
C	A1&!A2&B1&B2	0.0100	ZN(HL)	0.0010	0.1584
C	A1&A2&!B1&B2	0.0100	ZN(HL)	0.0010	0.3120
C	A1&A2&B1&!B2	0.0100	ZN(HL)	0.0010	0.1585
C	A1&A2&B1&B2	0.0100	ZN(HL)	0.0010	0.1585
A1	!A2&!B1&B2&C	0.0100	ZN(LH)	0.0010	0.9735
A1	!A2&B1&!B2&C	0.0100	ZN(LH)	0.0010	0.7950
A1	!A2&B1&B2&C	0.0100	ZN(LH)	0.0010	0.7939
B2	!A1&A2&!B1&C	0.0100	ZN(LH)	0.0010	1.9712
B2	A1&!A2&!B1&C	0.0100	ZN(LH)	0.0010	1.7937
B2	A1&A2&!B1&C	0.0100	ZN(LH)	0.0010	1.9336
B1	!A1&A2&!B2&C	0.0100	ZN(LH)	0.0010	1.7919
B1	A1&!A2&!B2&C	0.0100	ZN(LH)	0.0010	1.6143
B1	A1&A2&!B2&C	0.0100	ZN(LH)	0.0010	1.7548
A2	!A1&!B1&B2&C	0.0100	ZN(LH)	0.0010	1.1527
A2	!A1&B1&!B2&C	0.0100	ZN(LH)	0.0010	0.9738
A2	!A1&B1&B2&C	0.0100	ZN(LH)	0.0010	0.9728
B1	!A1&A2&!B2&C	0.0100	ZN(HL)	0.0010	0.2958
B1	A1&!A2&!B2&C	0.0100	ZN(HL)	0.0010	0.1430
B1	A1&A2&!B2&C	0.0100	ZN(HL)	0.0010	0.1434
A1	!A2&!B1&B2&C	0.0100	ZN(HL)	0.0010	0.2992
A1	!A2&B1&!B2&C	0.0100	ZN(HL)	0.0010	0.1447
A1	!A2&B1&B2&C	0.0100	ZN(HL)	0.0010	0.1445
B2	!A1&A2&!B1&C	0.0100	ZN(HL)	0.0010	0.4258
B2	A1&!A2&!B1&C	0.0100	ZN(HL)	0.0010	0.2769
B2	A1&A2&!B1&C	0.0100	ZN(HL)	0.0010	0.2766
A2	!A1&!B1&B2&C	0.0100	ZN(HL)	0.0010	0.4273
A2	!A1&B1&!B2&C	0.0100	ZN(HL)	0.0010	0.2759
A2	!A1&B1&B2&C	0.0100	ZN(HL)	0.0010	0.2753
A1(LH)	!A2&!B1&!B2&!C	0.0100	n/a	n/a	0.0010
A1(LH)	!A2&!B1&!B2&C	0.0100	n/a	n/a	0.3995
A1(LH)	!A2&!B1&B2&!C	0.0100	n/a	n/a	0.0011
A1(LH)	!A2&B1&!B2&!C	0.0100	n/a	n/a	0.0011
A1(LH)	!A2&B1&B2&!C	0.0100	n/a	n/a	0.0011
A1(LH)	A2&!B1&!B2&!C	0.0100	n/a	n/a	-0.2626
A1(LH)	A2&!B1&!B2&C	0.0100	n/a	n/a	-0.2620
A1(LH)	A2&!B1&B2&!C	0.0100	n/a	n/a	-0.2622
A1(LH)	A2&B1&!B2&!C	0.0100	n/a	n/a	-0.2623
A1(LH)	A2&B1&B2&!C	0.0100	n/a	n/a	-0.2623
A1(LH)	A2&!B1&B2&C	0.0100	n/a	n/a	-0.0674
A1(LH)	A2&B1&!B2&C	0.0100	n/a	n/a	-0.0674
A1(LH)	A2&B1&B2&C	0.0100	n/a	n/a	-0.0673
C(HL)	!A1&!A2&!B1&!B2	0.0100	n/a	n/a	0.2787
C(HL)	!A1&!A2&!B1&B2	0.0100	n/a	n/a	0.2432
C(HL)	!A1&!A2&B1&!B2	0.0100	n/a	n/a	0.2432
C(HL)	!A1&!A2&B1&B2	0.0100	n/a	n/a	0.2361
C(HL)	!A1&A2&!B1&!B2	0.0100	n/a	n/a	0.2085
C(HL)	A1&!A2&!B1&!B2	0.0100	n/a	n/a	0.2085
C(HL)	A1&A2&!B1&!B2	0.0100	n/a	n/a	0.2080
B2(LH)	!A1&!A2&!B1&!C	0.0100	n/a	n/a	-0.2379

continues on next page

Table 236 – continued from previous page

B2(LH)	!A1&!A2&!B1&C	0.0100	n/a	n/a	-0.2378
B2(LH)	!A1&!A2&B1&!C	0.0100	n/a	n/a	-0.2308
B2(LH)	!A1&!A2&B1&C	0.0100	n/a	n/a	-0.2307
B2(LH)	!A1&A2&!B1&!C	0.0100	n/a	n/a	-0.2381
B2(LH)	!A1&A2&B1&!C	0.0100	n/a	n/a	-0.2308
B2(LH)	A1&!A2&!B1&!C	0.0100	n/a	n/a	-0.2381
B2(LH)	A1&!A2&B1&!C	0.0100	n/a	n/a	-0.2308
B2(LH)	A1&A2&!B1&!C	0.0100	n/a	n/a	-0.2381
B2(LH)	A1&A2&B1&!C	0.0100	n/a	n/a	-0.2307
B2(LH)	!A1&A2&B1&C	0.0100	n/a	n/a	-0.1989
B2(LH)	A1&!A2&B1&C	0.0100	n/a	n/a	-0.1989
B2(LH)	A1&A2&B1&C	0.0100	n/a	n/a	-0.1989
A2(HL)	!A1&!B1&!B2&!C	0.0100	n/a	n/a	0.2675
A2(HL)	!A1&!B1&!B2&C	0.0100	n/a	n/a	0.2676
A2(HL)	!A1&!B1&B2&!C	0.0100	n/a	n/a	0.2675
A2(HL)	!A1&B1&!B2&!C	0.0100	n/a	n/a	0.2675
A2(HL)	!A1&B1&B2&!C	0.0100	n/a	n/a	0.2675
A2(HL)	A1&!B1&!B2&!C	0.0100	n/a	n/a	0.2826
A2(HL)	A1&!B1&!B2&C	0.0100	n/a	n/a	0.2812
A2(HL)	A1&!B1&B2&!C	0.0100	n/a	n/a	0.2827
A2(HL)	A1&B1&!B2&!C	0.0100	n/a	n/a	0.2826
A2(HL)	A1&B1&B2&!C	0.0100	n/a	n/a	0.2826
A2(HL)	A1&!B1&B2&C	0.0100	n/a	n/a	0.2382
A2(HL)	A1&B1&!B2&C	0.0100	n/a	n/a	0.2382
A2(HL)	A1&B1&B2&C	0.0100	n/a	n/a	0.2382
B1(HL)	!A1&!A2&!B2&!C	0.0100	n/a	n/a	0.2398
B1(HL)	!A1&!A2&!B2&C	0.0100	n/a	n/a	0.2461
B1(HL)	!A1&!A2&B2&!C	0.0100	n/a	n/a	0.2389
B1(HL)	!A1&!A2&B2&C	0.0100	n/a	n/a	0.2388
B1(HL)	!A1&A2&!B2&!C	0.0100	n/a	n/a	0.2478
B1(HL)	!A1&A2&B2&!C	0.0100	n/a	n/a	0.2390
B1(HL)	A1&!A2&!B2&!C	0.0100	n/a	n/a	0.2478
B1(HL)	A1&!A2&B2&!C	0.0100	n/a	n/a	0.2389
B1(HL)	A1&A2&!B2&!C	0.0100	n/a	n/a	0.2473
B1(HL)	A1&A2&B2&!C	0.0100	n/a	n/a	0.2389
B1(HL)	!A1&A2&B2&C	0.0100	n/a	n/a	0.1623
B1(HL)	A1&!A2&B2&C	0.0100	n/a	n/a	0.1623
B1(HL)	A1&A2&B2&C	0.0100	n/a	n/a	0.1623
B2(HL)	!A1&!A2&!B1&!C	0.0100	n/a	n/a	0.2388
B2(HL)	!A1&!A2&!B1&C	0.0100	n/a	n/a	0.2454
B2(HL)	!A1&!A2&B1&!C	0.0100	n/a	n/a	0.2383
B2(HL)	!A1&!A2&B1&C	0.0100	n/a	n/a	0.2384
B2(HL)	!A1&A2&!B1&!C	0.0100	n/a	n/a	0.2468
B2(HL)	!A1&A2&B1&!C	0.0100	n/a	n/a	0.2383
B2(HL)	A1&!A2&!B1&!C	0.0100	n/a	n/a	0.2468
B2(HL)	A1&!A2&B1&!C	0.0100	n/a	n/a	0.2383
B2(HL)	A1&A2&!B1&!C	0.0100	n/a	n/a	0.2464
B2(HL)	A1&A2&B1&!C	0.0100	n/a	n/a	0.2383
B2(HL)	!A1&A2&B1&C	0.0100	n/a	n/a	0.2384
B2(HL)	A1&!A2&B1&C	0.0100	n/a	n/a	0.2384
B2(HL)	A1&A2&B1&C	0.0100	n/a	n/a	0.2383
A1(HL)	!A2&!B1&!B2&!C	0.0100	n/a	n/a	0.2685

continues on next page

Table 236 – continued from previous page

A1(HL)	!A2&!B1&!B2&C	0.0100	n/a	n/a	0.2684
A1(HL)	!A2&!B1&B2&!C	0.0100	n/a	n/a	0.2684
A1(HL)	!A2&B1&!B2&!C	0.0100	n/a	n/a	0.2685
A1(HL)	!A2&B1&B2&!C	0.0100	n/a	n/a	0.2685
A1(HL)	A2&!B1&!B2&!C	0.0100	n/a	n/a	0.2827
A1(HL)	A2&!B1&!B2&C	0.0100	n/a	n/a	0.2810
A1(HL)	A2&!B1&B2&!C	0.0100	n/a	n/a	0.2828
A1(HL)	A2&B1&!B2&!C	0.0100	n/a	n/a	0.2828
A1(HL)	A2&B1&B2&!C	0.0100	n/a	n/a	0.2828
A1(HL)	A2&!B1&B2&C	0.0100	n/a	n/a	0.1597
A1(HL)	A2&B1&!B2&C	0.0100	n/a	n/a	0.1598
A1(HL)	A2&B1&B2&C	0.0100	n/a	n/a	0.1598
B1(LH)	!A1&!A2&!B2&!C	0.0100	n/a	n/a	-0.2391
B1(LH)	!A1&!A2&!B2&C	0.0100	n/a	n/a	-0.2393
B1(LH)	!A1&!A2&B2&!C	0.0100	n/a	n/a	-0.2334
B1(LH)	!A1&!A2&B2&C	0.0100	n/a	n/a	-0.2328
B1(LH)	!A1&A2&!B2&!C	0.0100	n/a	n/a	-0.2393
B1(LH)	!A1&A2&B2&!C	0.0100	n/a	n/a	-0.2329
B1(LH)	A1&!A2&!B2&!C	0.0100	n/a	n/a	-0.2391
B1(LH)	A1&!A2&B2&!C	0.0100	n/a	n/a	-0.2331
B1(LH)	A1&A2&!B2&!C	0.0100	n/a	n/a	-0.2391
B1(LH)	A1&A2&B2&!C	0.0100	n/a	n/a	-0.2331
B1(LH)	!A1&A2&B2&C	0.0100	n/a	n/a	-0.0678
B1(LH)	A1&!A2&B2&C	0.0100	n/a	n/a	-0.0678
B1(LH)	A1&A2&B2&C	0.0100	n/a	n/a	-0.0678
C(LH)	!A1&!A2&!B1&!B2	0.0100	n/a	n/a	-0.1900
C(LH)	!A1&!A2&!B1&B2	0.0100	n/a	n/a	-0.1893
C(LH)	!A1&!A2&B1&!B2	0.0100	n/a	n/a	-0.1892
C(LH)	!A1&!A2&B1&B2	0.0100	n/a	n/a	-0.1894
C(LH)	!A1&A2&!B1&!B2	0.0100	n/a	n/a	-0.0054
C(LH)	A1&!A2&!B1&!B2	0.0100	n/a	n/a	-0.0055
C(LH)	A1&A2&!B1&!B2	0.0100	n/a	n/a	-0.0056
A2(LH)	!A1&!B1&!B2&!C	0.0100	n/a	n/a	0.0026
A2(LH)	!A1&!B1&!B2&C	0.0100	n/a	n/a	0.4014
A2(LH)	!A1&!B1&B2&!C	0.0100	n/a	n/a	0.0027
A2(LH)	!A1&B1&!B2&!C	0.0100	n/a	n/a	0.0026
A2(LH)	!A1&B1&B2&!C	0.0100	n/a	n/a	0.0027
A2(LH)	A1&!B1&!B2&!C	0.0100	n/a	n/a	-0.2601
A2(LH)	A1&!B1&!B2&C	0.0100	n/a	n/a	-0.2599
A2(LH)	A1&!B1&B2&!C	0.0100	n/a	n/a	-0.2600
A2(LH)	A1&B1&!B2&!C	0.0100	n/a	n/a	-0.2600
A2(LH)	A1&B1&B2&!C	0.0100	n/a	n/a	-0.2600
A2(LH)	A1&!B1&B2&C	0.0100	n/a	n/a	-0.1994
A2(LH)	A1&B1&!B2&C	0.0100	n/a	n/a	-0.1994
A2(LH)	A1&B1&B2&C	0.0100	n/a	n/a	-0.1994

LEAKAGE POWER

When Condition	Power (nW)
!A1&!A2&!B1&!B2&!C	0.2517
!A1&!A2&!B1&!B2&C	0.2524
!A1&!A2&!B1&B2&!C	0.2517
!A1&!A2&!B1&B2&C	0.2547
!A1&!A2&B1&!B2&!C	0.2517
!A1&!A2&B1&!B2&C	0.2547
!A1&!A2&B1&B2&!C	0.2517
!A1&!A2&B1&B2&C	0.2547
!A1&A2&!B1&!B2&!C	0.4891
!A1&A2&!B1&!B2&C	0.7240
!A1&A2&!B1&B2&!C	0.4898
!A1&A2&B1&!B2&!C	0.4898
!A1&A2&B1&B2&!C	0.4898
A1&!A2&!B1&!B2&!C	0.4891
A1&!A2&!B1&!B2&C	0.7240
A1&!A2&!B1&B2&!C	0.4898
A1&!A2&B1&!B2&!C	0.4898
A1&!A2&B1&B2&!C	0.4898
A1&A2&!B1&!B2&!C	0.4903
A1&A2&!B1&!B2&C	0.7254
A1&A2&!B1&B2&!C	0.4910
A1&A2&B1&!B2&!C	0.4910
A1&A2&B1&B2&!C	0.4910
!A1&A2&!B1&B2&C	0.6550
!A1&A2&B1&!B2&C	0.5132
!A1&A2&B1&B2&C	0.5132
A1&!A2&!B1&B2&C	0.5132
A1&!A2&B1&!B2&C	0.3714
A1&!A2&B1&B2&C	0.3714
A1&A2&!B1&B2&C	0.5132
A1&A2&B1&!B2&C	0.3714
A1&A2&B1&B2&C	0.3714

gf180mcu_fd_sc_mcu9t5v0__oai222_1

gf180mcu_fd_sc_mcu9t5v0__oai222_1 symbol

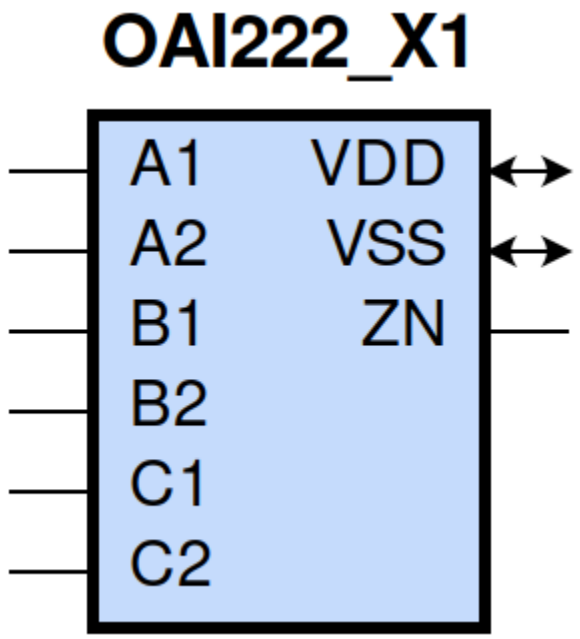

gf180mcu_fd_sc_mcu9t5v0__oai222_1 schematic

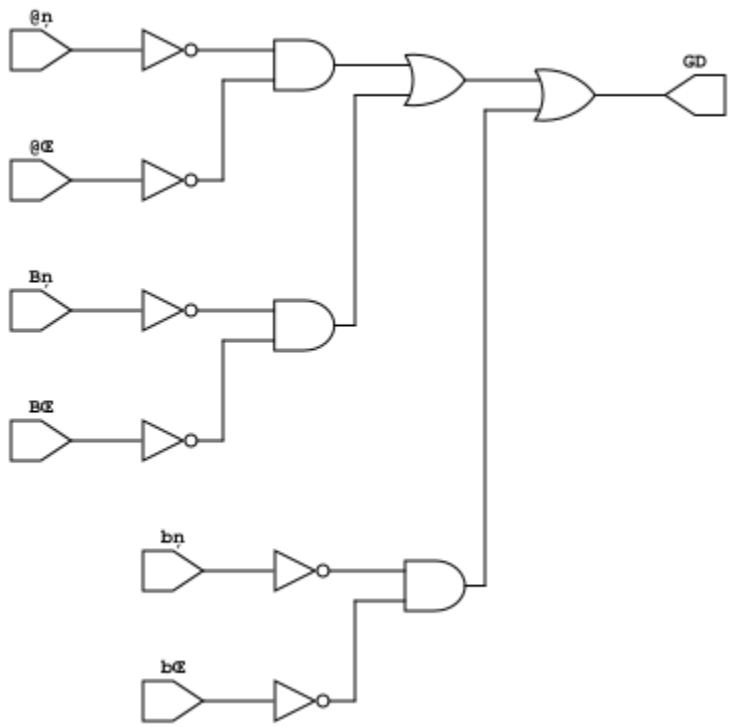

gf180mcu_fd_sc_mcu9t5v0__oai222_1 layout

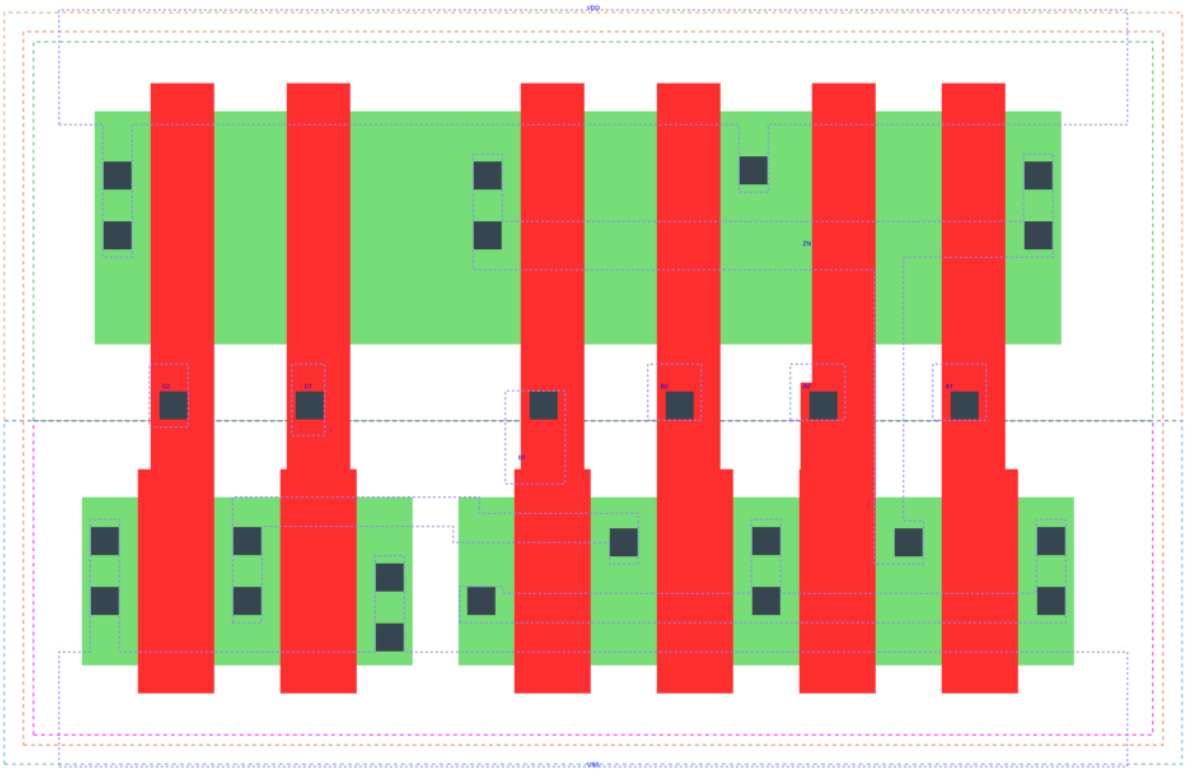

OAI222_X1 is a three 2-input OR into 3-input NAND with 1X drive strength

Attributes

Attribute	Value
area	42.336000 μm^2

OUTPUT FUNCTIONS

Output Pin	Function
ZN	(((!A1)&(!A2))|((!B1)&(!B2))|((!C1)&(!C2)))

TRUTH TABLE FOR ZN

A1	A2	B1	B2	C1	C2	ZN
0	0	?	?	?	?	1
?	?	0	0	?	?	1
?	?	?	?	0	0	1
1	?	1	?	1	?	0
1	?	1	?	?	1	0
1	?	?	1	1	?	0
1	?	?	1	?	1	0
?	1	1	?	1	?	0
?	1	1	?	?	1	0
?	1	?	1	1	?	0
?	1	?	1	?	1	0

FUNCTIONAL SCHEMATIC

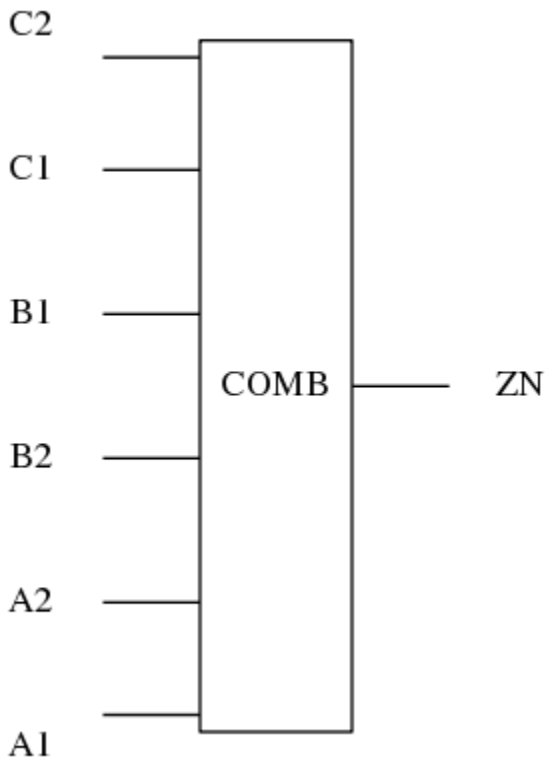

PIN CAPACITANCE (pf)

Pin	Type	Capacitance (pf)
C2	input	0.0065
C1	input	0.0066
B1	input	0.0068
B2	input	0.0065
A2	input	0.0067
A1	input	0.0068

DELAY AND OUTPUT TRANSITION TIME corresponding to min slew and load

Input Pin	Output	When Condition	Tin (ns)	Out Load (pf)	Delay (ns)	Tout (ns)
C2(LH)	ZN(HL)	!A1&A2&!B1&B2&!C1	0.0100	0.0010	0.2524	0.1309
C2(LH)	ZN(HL)	!A1&A2&B1&!B2&!C1	0.0100	0.0010	0.2188	0.1097
C2(LH)	ZN(HL)	!A1&A2&B1&B2&!C1	0.0100	0.0010	0.1966	0.0920
C2(LH)	ZN(HL)	A1&!A2&!B1&B2&!C1	0.0100	0.0010	0.2192	0.1100
C2(LH)	ZN(HL)	A1&!A2&B1&!B2&!C1	0.0100	0.0010	0.1866	0.0892
C2(LH)	ZN(HL)	A1&!A2&B1&B2&!C1	0.0100	0.0010	0.1691	0.0750
C2(LH)	ZN(HL)	A1&A2&!B1&B2&!C1	0.0100	0.0010	0.1917	0.1085
C2(LH)	ZN(HL)	A1&A2&B1&!B2&!C1	0.0100	0.0010	0.1647	0.0904
C2(LH)	ZN(HL)	A1&A2&B1&B2&!C1	0.0100	0.0010	0.1426	0.0722
C2(HL)	ZN(LH)	!A1&A2&!B1&B2&!C1	0.0100	0.0010	0.3243	0.3063
C2(HL)	ZN(LH)	!A1&A2&B1&!B2&!C1	0.0100	0.0010	0.3075	0.2603
C2(HL)	ZN(LH)	!A1&A2&B1&B2&!C1	0.0100	0.0010	0.3268	0.2749
C2(HL)	ZN(LH)	A1&!A2&!B1&B2&!C1	0.0100	0.0010	0.3076	0.2612
C2(HL)	ZN(LH)	A1&!A2&B1&!B2&!C1	0.0100	0.0010	0.2921	0.2140
C2(HL)	ZN(LH)	A1&!A2&B1&B2&!C1	0.0100	0.0010	0.3109	0.2281
C2(HL)	ZN(LH)	A1&A2&!B1&B2&!C1	0.0100	0.0010	0.3371	0.2798
C2(HL)	ZN(LH)	A1&A2&B1&!B2&!C1	0.0100	0.0010	0.3231	0.2346
C2(HL)	ZN(LH)	A1&A2&B1&B2&!C1	0.0100	0.0010	0.3438	0.2496
C1(LH)	ZN(HL)	!A1&A2&!B1&B2&!C2	0.0100	0.0010	0.2221	0.1096
C1(LH)	ZN(HL)	!A1&A2&B1&!B2&!C2	0.0100	0.0010	0.1894	0.0886
C1(LH)	ZN(HL)	!A1&A2&B1&B2&!C2	0.0100	0.0010	0.1716	0.0744
C1(LH)	ZN(HL)	A1&!A2&!B1&B2&!C2	0.0100	0.0010	0.1898	0.0890
C1(LH)	ZN(HL)	A1&!A2&B1&!B2&!C2	0.0100	0.0010	0.1586	0.0678
C1(LH)	ZN(HL)	A1&!A2&B1&B2&!C2	0.0100	0.0010	0.1455	0.0576
C1(LH)	ZN(HL)	A1&A2&!B1&B2&!C2	0.0100	0.0010	0.1674	0.0904
C1(LH)	ZN(HL)	A1&A2&B1&!B2&!C2	0.0100	0.0010	0.1418	0.0722
C1(LH)	ZN(HL)	A1&A2&B1&B2&!C2	0.0100	0.0010	0.1247	0.0579
C1(HL)	ZN(LH)	!A1&A2&!B1&B2&!C2	0.0100	0.0010	0.3005	0.3066
C1(HL)	ZN(LH)	!A1&A2&B1&!B2&!C2	0.0100	0.0010	0.2837	0.2603
C1(HL)	ZN(LH)	!A1&A2&B1&B2&!C2	0.0100	0.0010	0.3030	0.2750
C1(HL)	ZN(LH)	A1&!A2&!B1&B2&!C2	0.0100	0.0010	0.2839	0.2612
C1(HL)	ZN(LH)	A1&!A2&B1&!B2&!C2	0.0100	0.0010	0.2684	0.2144
C1(HL)	ZN(LH)	A1&!A2&B1&B2&!C2	0.0100	0.0010	0.2871	0.2285
C1(HL)	ZN(LH)	A1&A2&!B1&B2&!C2	0.0100	0.0010	0.3133	0.2798
C1(HL)	ZN(LH)	A1&A2&B1&!B2&!C2	0.0100	0.0010	0.2993	0.2347
C1(HL)	ZN(LH)	A1&A2&B1&B2&!C2	0.0100	0.0010	0.3199	0.2498

continues on next page

Table 238 – continued from previous page

B1(LH)	ZN(HL)	!A1&A2&!B2&!C1&C2	0.0100	0.0010	0.1980	0.1096
B1(LH)	ZN(HL)	!A1&A2&!B2&C1&!C2	0.0100	0.0010	0.1652	0.0889
B1(LH)	ZN(HL)	!A1&A2&!B2&C1&C2	0.0100	0.0010	0.1439	0.0732
B1(LH)	ZN(HL)	A1&!A2&!B2&!C1&C2	0.0100	0.0010	0.1657	0.0889
B1(LH)	ZN(HL)	A1&!A2&!B2&C1&!C2	0.0100	0.0010	0.1344	0.0677
B1(LH)	ZN(HL)	A1&!A2&!B2&C1&C2	0.0100	0.0010	0.1180	0.0554
B1(LH)	ZN(HL)	A1&A2&!B2&!C1&C2	0.0100	0.0010	0.1431	0.0905
B1(LH)	ZN(HL)	A1&A2&!B2&C1&!C2	0.0100	0.0010	0.1175	0.0719
B1(LH)	ZN(HL)	A1&A2&!B2&C1&C2	0.0100	0.0010	0.1014	0.0550
B1(HL)	ZN(LH)	!A1&A2&!B2&!C1&C2	0.0100	0.0010	0.2397	0.2520
B1(HL)	ZN(LH)	!A1&A2&!B2&C1&!C2	0.0100	0.0010	0.2262	0.2084
B1(HL)	ZN(LH)	!A1&A2&!B2&C1&C2	0.0100	0.0010	0.2247	0.2085
B1(HL)	ZN(LH)	A1&!A2&!B2&!C1&C2	0.0100	0.0010	0.2262	0.2092
B1(HL)	ZN(LH)	A1&!A2&!B2&C1&!C2	0.0100	0.0010	0.2142	0.1659
B1(HL)	ZN(LH)	A1&!A2&!B2&C1&C2	0.0100	0.0010	0.2127	0.1659
B1(HL)	ZN(LH)	A1&A2&!B2&!C1&C2	0.0100	0.0010	0.2509	0.2271
B1(HL)	ZN(LH)	A1&A2&!B2&C1&!C2	0.0100	0.0010	0.2394	0.1845
B1(HL)	ZN(LH)	A1&A2&!B2&C1&C2	0.0100	0.0010	0.2378	0.1843
B2(HL)	ZN(LH)	!A1&A2&!B1&!C1&C2	0.0100	0.0010	0.2638	0.2520
B2(HL)	ZN(LH)	!A1&A2&!B1&C1&!C2	0.0100	0.0010	0.2501	0.2084
B2(HL)	ZN(LH)	!A1&A2&!B1&C1&C2	0.0100	0.0010	0.2487	0.2084
B2(HL)	ZN(LH)	A1&!A2&!B1&!C1&C2	0.0100	0.0010	0.2502	0.2092
B2(HL)	ZN(LH)	A1&!A2&!B1&C1&!C2	0.0100	0.0010	0.2383	0.1658
B2(HL)	ZN(LH)	A1&!A2&!B1&C1&C2	0.0100	0.0010	0.2370	0.1658
B2(HL)	ZN(LH)	A1&A2&!B1&!C1&C2	0.0100	0.0010	0.2750	0.2271
B2(HL)	ZN(LH)	A1&A2&!B1&C1&!C2	0.0100	0.0010	0.2633	0.1845
B2(HL)	ZN(LH)	A1&A2&!B1&C1&C2	0.0100	0.0010	0.2618	0.1844
B2(LH)	ZN(HL)	!A1&A2&!B1&!C1&C2	0.0100	0.0010	0.2282	0.1309
B2(LH)	ZN(HL)	!A1&A2&!B1&C1&!C2	0.0100	0.0010	0.1944	0.1095
B2(LH)	ZN(HL)	!A1&A2&!B1&C1&C2	0.0100	0.0010	0.1688	0.0910
B2(LH)	ZN(HL)	A1&!A2&!B1&!C1&C2	0.0100	0.0010	0.1950	0.1102
B2(LH)	ZN(HL)	A1&!A2&!B1&C1&!C2	0.0100	0.0010	0.1624	0.0893
B2(LH)	ZN(HL)	A1&!A2&!B1&C1&C2	0.0100	0.0010	0.1413	0.0731
B2(LH)	ZN(HL)	A1&A2&!B1&!C1&C2	0.0100	0.0010	0.1675	0.1084
B2(LH)	ZN(HL)	A1&A2&!B1&C1&!C2	0.0100	0.0010	0.1403	0.0903
B2(LH)	ZN(HL)	A1&A2&!B1&C1&C2	0.0100	0.0010	0.1193	0.0697
A2(HL)	ZN(LH)	!A1&!B1&B2&!C1&C2	0.0100	0.0010	0.1727	0.1829
A2(HL)	ZN(LH)	!A1&!B1&B2&C1&!C2	0.0100	0.0010	0.1622	0.1406
A2(HL)	ZN(LH)	!A1&!B1&B2&C1&C2	0.0100	0.0010	0.1620	0.1406
A2(HL)	ZN(LH)	!A1&B1&!B2&!C1&C2	0.0100	0.0010	0.1620	0.1403
A2(HL)	ZN(LH)	!A1&B1&!B2&C1&!C2	0.0100	0.0010	0.1531	0.1007
A2(HL)	ZN(LH)	!A1&B1&!B2&C1&C2	0.0100	0.0010	0.1530	0.1007
A2(HL)	ZN(LH)	!A1&B1&B2&!C1&C2	0.0100	0.0010	0.1614	0.1405
A2(HL)	ZN(LH)	!A1&B1&B2&C1&!C2	0.0100	0.0010	0.1523	0.1006
A2(HL)	ZN(LH)	!A1&B1&B2&C1&C2	0.0100	0.0010	0.1521	0.1007
A2(LH)	ZN(HL)	!A1&!B1&B2&!C1&C2	0.0100	0.0010	0.1764	0.1307
A2(LH)	ZN(HL)	!A1&!B1&B2&C1&!C2	0.0100	0.0010	0.1428	0.1091
A2(LH)	ZN(HL)	!A1&!B1&B2&C1&C2	0.0100	0.0010	0.1289	0.0909
A2(LH)	ZN(HL)	!A1&B1&!B2&!C1&C2	0.0100	0.0010	0.1429	0.1091
A2(LH)	ZN(HL)	!A1&B1&!B2&C1&!C2	0.0100	0.0010	0.1103	0.0871
A2(LH)	ZN(HL)	!A1&B1&!B2&C1&C2	0.0100	0.0010	0.1011	0.0726
A2(LH)	ZN(HL)	!A1&B1&B2&!C1&C2	0.0100	0.0010	0.1234	0.0905

continues on next page

Table 238 – continued from previous page

A2(LH)	ZN(HL)	!A1&B1&B2&C1&!C2	0.0100	0.0010	0.0958	0.0720
A2(LH)	ZN(HL)	!A1&B1&B2&C1&C2	0.0100	0.0010	0.0870	0.0583
A1(HL)	ZN(LH)	!A2&!B1&B2&!C1&C2	0.0100	0.0010	0.1492	0.1828
A1(HL)	ZN(LH)	!A2&!B1&B2&C1&!C2	0.0100	0.0010	0.1386	0.1401
A1(HL)	ZN(LH)	!A2&!B1&B2&C1&C2	0.0100	0.0010	0.1386	0.1404
A1(HL)	ZN(LH)	!A2&B1&!B2&!C1&C2	0.0100	0.0010	0.1388	0.1401
A1(HL)	ZN(LH)	!A2&B1&!B2&C1&!C2	0.0100	0.0010	0.1297	0.1004
A1(HL)	ZN(LH)	!A2&B1&!B2&C1&C2	0.0100	0.0010	0.1296	0.1005
A1(HL)	ZN(LH)	!A2&B1&B2&!C1&C2	0.0100	0.0010	0.1377	0.1402
A1(HL)	ZN(LH)	!A2&B1&B2&C1&!C2	0.0100	0.0010	0.1288	0.1005
A1(HL)	ZN(LH)	!A2&B1&B2&C1&C2	0.0100	0.0010	0.1285	0.1005
A1(LH)	ZN(HL)	!A2&!B1&B2&!C1&C2	0.0100	0.0010	0.1469	0.1095
A1(LH)	ZN(HL)	!A2&!B1&B2&C1&!C2	0.0100	0.0010	0.1140	0.0875
A1(LH)	ZN(HL)	!A2&!B1&B2&C1&C2	0.0100	0.0010	0.1044	0.0730
A1(LH)	ZN(HL)	!A2&B1&!B2&!C1&C2	0.0100	0.0010	0.1140	0.0875
A1(LH)	ZN(HL)	!A2&B1&!B2&C1&!C2	0.0100	0.0010	0.0838	0.0644
A1(LH)	ZN(HL)	!A2&B1&!B2&C1&C2	0.0100	0.0010	0.0785	0.0544
A1(LH)	ZN(HL)	!A2&B1&B2&!C1&C2	0.0100	0.0010	0.0991	0.0720
A1(LH)	ZN(HL)	!A2&B1&B2&C1&!C2	0.0100	0.0010	0.0740	0.0524
A1(LH)	ZN(HL)	!A2&B1&B2&C1&C2	0.0100	0.0010	0.0689	0.0434

DYNAMIC ENERGY

Input Pin	When Condition	Tin (ns)	Output	Out Load (pf)	Energy (uW/MHz)
A1	!A2&!B1&B2&!C1&C2	0.0100	ZN(LH)	0.0010	0.2818
A1	!A2&!B1&B2&C1&!C2	0.0100	ZN(LH)	0.0010	0.2375
A1	!A2&!B1&B2&C1&C2	0.0100	ZN(LH)	0.0010	0.2374
A1	!A2&B1&!B2&!C1&C2	0.0100	ZN(LH)	0.0010	0.2373
A1	!A2&B1&!B2&C1&!C2	0.0100	ZN(LH)	0.0010	0.1930
A1	!A2&B1&!B2&C1&C2	0.0100	ZN(LH)	0.0010	0.1929
A1	!A2&B1&B2&!C1&C2	0.0100	ZN(LH)	0.0010	0.2362
A1	!A2&B1&B2&C1&!C2	0.0100	ZN(LH)	0.0010	0.1919
A1	!A2&B1&B2&C1&C2	0.0100	ZN(LH)	0.0010	0.1917
B2	!A1&A2&!B1&!C1&C2	0.0100	ZN(LH)	0.0010	0.4757
B2	!A1&A2&!B1&C1&!C2	0.0100	ZN(LH)	0.0010	0.4313
B2	!A1&A2&!B1&C1&C2	0.0100	ZN(LH)	0.0010	0.4296
B2	A1&!A2&!B1&!C1&C2	0.0100	ZN(LH)	0.0010	0.4315
B2	A1&!A2&!B1&C1&!C2	0.0100	ZN(LH)	0.0010	0.3874
B2	A1&!A2&!B1&C1&C2	0.0100	ZN(LH)	0.0010	0.3856
B2	A1&A2&!B1&!C1&C2	0.0100	ZN(LH)	0.0010	0.4678
B2	A1&A2&!B1&C1&!C2	0.0100	ZN(LH)	0.0010	0.4235
B2	A1&A2&!B1&C1&C2	0.0100	ZN(LH)	0.0010	0.4217
B1	!A1&A2&!B2&!C1&C2	0.0100	ZN(HL)	0.0010	0.1375
B1	!A1&A2&!B2&C1&!C2	0.0100	ZN(HL)	0.0010	0.1004
B1	!A1&A2&!B2&C1&C2	0.0100	ZN(HL)	0.0010	0.1004
B1	A1&!A2&!B2&!C1&C2	0.0100	ZN(HL)	0.0010	0.1015
B1	A1&!A2&!B2&C1&!C2	0.0100	ZN(HL)	0.0010	0.0642

continues on next page

Table 239 – continued from previous page

B1	A1&!A2&!B2&C1&C2	0.0100	ZN(HL)	0.0010	0.0641
B1	A1&A2&!B2&!C1&C2	0.0100	ZN(HL)	0.0010	0.1017
B1	A1&A2&!B2&C1&!C2	0.0100	ZN(HL)	0.0010	0.0643
B1	A1&A2&!B2&C1&C2	0.0100	ZN(HL)	0.0010	0.0643
A2	!A1&!B1&B2&!C1&C2	0.0100	ZN(LH)	0.0010	0.3264
A2	!A1&!B1&B2&C1&!C2	0.0100	ZN(LH)	0.0010	0.2821
A2	!A1&!B1&B2&C1&C2	0.0100	ZN(LH)	0.0010	0.2820
A2	!A1&B1&!B2&!C1&C2	0.0100	ZN(LH)	0.0010	0.2819
A2	!A1&B1&!B2&C1&!C2	0.0100	ZN(LH)	0.0010	0.2377
A2	!A1&B1&!B2&C1&C2	0.0100	ZN(LH)	0.0010	0.2375
A2	!A1&B1&B2&!C1&C2	0.0100	ZN(LH)	0.0010	0.2809
A2	!A1&B1&B2&C1&!C2	0.0100	ZN(LH)	0.0010	0.2366
A2	!A1&B1&B2&C1&C2	0.0100	ZN(LH)	0.0010	0.2365
B1	!A1&A2&!B2&!C1&C2	0.0100	ZN(LH)	0.0010	0.4309
B1	!A1&A2&!B2&C1&!C2	0.0100	ZN(LH)	0.0010	0.3867
B1	!A1&A2&!B2&C1&C2	0.0100	ZN(LH)	0.0010	0.3849
B1	A1&!A2&!B2&!C1&C2	0.0100	ZN(LH)	0.0010	0.3868
B1	A1&!A2&!B2&C1&!C2	0.0100	ZN(LH)	0.0010	0.3425
B1	A1&!A2&!B2&C1&C2	0.0100	ZN(LH)	0.0010	0.3407
B1	A1&A2&!B2&!C1&C2	0.0100	ZN(LH)	0.0010	0.4229
B1	A1&A2&!B2&C1&!C2	0.0100	ZN(LH)	0.0010	0.3787
B1	A1&A2&!B2&C1&C2	0.0100	ZN(LH)	0.0010	0.3768
C1	!A1&A2&!B1&B2&!C2	0.0100	ZN(HL)	0.0010	0.1378
C1	!A1&A2&B1&!B2&!C2	0.0100	ZN(HL)	0.0010	0.1006
C1	!A1&A2&B1&B2&!C2	0.0100	ZN(HL)	0.0010	0.1006
C1	A1&!A2&!B1&B2&!C2	0.0100	ZN(HL)	0.0010	0.1018
C1	A1&!A2&B1&!B2&!C2	0.0100	ZN(HL)	0.0010	0.0644
C1	A1&!A2&B1&B2&!C2	0.0100	ZN(HL)	0.0010	0.0645
C1	A1&A2&!B1&B2&!C2	0.0100	ZN(HL)	0.0010	0.1018
C1	A1&A2&B1&!B2&!C2	0.0100	ZN(HL)	0.0010	0.0645
C1	A1&A2&B1&B2&!C2	0.0100	ZN(HL)	0.0010	0.0644
A2	!A1&!B1&B2&!C1&C2	0.0100	ZN(HL)	0.0010	0.1693
A2	!A1&!B1&B2&C1&!C2	0.0100	ZN(HL)	0.0010	0.1323
A2	!A1&!B1&B2&C1&C2	0.0100	ZN(HL)	0.0010	0.1324
A2	!A1&B1&!B2&!C1&C2	0.0100	ZN(HL)	0.0010	0.1323
A2	!A1&B1&!B2&C1&!C2	0.0100	ZN(HL)	0.0010	0.0953
A2	!A1&B1&!B2&C1&C2	0.0100	ZN(HL)	0.0010	0.0952
A2	!A1&B1&B2&!C1&C2	0.0100	ZN(HL)	0.0010	0.1324
A2	!A1&B1&B2&C1&!C2	0.0100	ZN(HL)	0.0010	0.0954
A2	!A1&B1&B2&C1&C2	0.0100	ZN(HL)	0.0010	0.0952
C2	!A1&A2&!B1&B2&!C1	0.0100	ZN(HL)	0.0010	0.1689
C2	!A1&A2&B1&!B2&!C1	0.0100	ZN(HL)	0.0010	0.1317
C2	!A1&A2&B1&B2&!C1	0.0100	ZN(HL)	0.0010	0.1318
C2	A1&!A2&!B1&B2&!C1	0.0100	ZN(HL)	0.0010	0.1330
C2	A1&!A2&B1&!B2&!C1	0.0100	ZN(HL)	0.0010	0.0962
C2	A1&!A2&B1&B2&!C1	0.0100	ZN(HL)	0.0010	0.0960
C2	A1&A2&!B1&B2&!C1	0.0100	ZN(HL)	0.0010	0.1331
C2	A1&A2&B1&!B2&!C1	0.0100	ZN(HL)	0.0010	0.0961
C2	A1&A2&B1&B2&!C1	0.0100	ZN(HL)	0.0010	0.0960
C1	!A1&A2&!B1&B2&!C2	0.0100	ZN(LH)	0.0010	0.5444
C1	!A1&A2&B1&!B2&!C2	0.0100	ZN(LH)	0.0010	0.4999
C1	!A1&A2&B1&B2&!C2	0.0100	ZN(LH)	0.0010	0.5348

continues on next page

Table 239 – continued from previous page

C1	A1&!A2&!B1&B2&!C2	0.0100	ZN(LH)	0.0010	0.5003
C1	A1&!A2&B1&!B2&!C2	0.0100	ZN(LH)	0.0010	0.4558
C1	A1&!A2&B1&B2&!C2	0.0100	ZN(LH)	0.0010	0.4907
C1	A1&A2&!B1&B2&!C2	0.0100	ZN(LH)	0.0010	0.5358
C1	A1&A2&B1&!B2&!C2	0.0100	ZN(LH)	0.0010	0.4913
C1	A1&A2&B1&B2&!C2	0.0100	ZN(LH)	0.0010	0.5262
C2	!A1&A2&!B1&B2&!C1	0.0100	ZN(LH)	0.0010	0.5888
C2	!A1&A2&B1&!B2&!C1	0.0100	ZN(LH)	0.0010	0.5442
C2	!A1&A2&B1&B2&!C1	0.0100	ZN(LH)	0.0010	0.5792
C2	A1&!A2&!B1&B2&!C1	0.0100	ZN(LH)	0.0010	0.5446
C2	A1&!A2&B1&!B2&!C1	0.0100	ZN(LH)	0.0010	0.5002
C2	A1&!A2&B1&B2&!C1	0.0100	ZN(LH)	0.0010	0.5352
C2	A1&A2&!B1&B2&!C1	0.0100	ZN(LH)	0.0010	0.5801
C2	A1&A2&B1&!B2&!C1	0.0100	ZN(LH)	0.0010	0.5354
C2	A1&A2&B1&B2&!C1	0.0100	ZN(LH)	0.0010	0.5704
A1	!A2&!B1&B2&!C1&C2	0.0100	ZN(HL)	0.0010	0.1395
A1	!A2&!B1&B2&C1&!C2	0.0100	ZN(HL)	0.0010	0.1022
A1	!A2&!B1&B2&C1&C2	0.0100	ZN(HL)	0.0010	0.1023
A1	!A2&B1&!B2&!C1&C2	0.0100	ZN(HL)	0.0010	0.1022
A1	!A2&B1&!B2&C1&!C2	0.0100	ZN(HL)	0.0010	0.0649
A1	!A2&B1&!B2&C1&C2	0.0100	ZN(HL)	0.0010	0.0649
A1	!A2&B1&B2&!C1&C2	0.0100	ZN(HL)	0.0010	0.1022
A1	!A2&B1&B2&C1&!C2	0.0100	ZN(HL)	0.0010	0.0648
A1	!A2&B1&B2&C1&C2	0.0100	ZN(HL)	0.0010	0.0647
B2	!A1&A2&!B1&!C1&C2	0.0100	ZN(HL)	0.0010	0.1688
B2	!A1&A2&!B1&C1&!C2	0.0100	ZN(HL)	0.0010	0.1317
B2	!A1&A2&!B1&C1&C2	0.0100	ZN(HL)	0.0010	0.1318
B2	A1&!A2&!B1&!C1&C2	0.0100	ZN(HL)	0.0010	0.1328
B2	A1&!A2&!B1&C1&!C2	0.0100	ZN(HL)	0.0010	0.0960
B2	A1&!A2&!B1&C1&C2	0.0100	ZN(HL)	0.0010	0.0959
B2	A1&A2&!B1&!C1&C2	0.0100	ZN(HL)	0.0010	0.1329
B2	A1&A2&!B1&C1&!C2	0.0100	ZN(HL)	0.0010	0.0960
B2	A1&A2&!B1&C1&C2	0.0100	ZN(HL)	0.0010	0.0959
B2(LH)	!A1&!A2&!B1&!C1&!C2	0.0100	n/a	n/a	-0.0595
B2(LH)	!A1&!A2&!B1&!C1&C2	0.0100	n/a	n/a	-0.0595
B2(LH)	!A1&!A2&!B1&C1&!C2	0.0100	n/a	n/a	-0.0595
B2(LH)	!A1&!A2&!B1&C1&C2	0.0100	n/a	n/a	-0.0595
B2(LH)	!A1&!A2&B1&!C1&!C2	0.0100	n/a	n/a	-0.0577
B2(LH)	!A1&!A2&B1&!C1&C2	0.0100	n/a	n/a	-0.0576
B2(LH)	!A1&!A2&B1&C1&!C2	0.0100	n/a	n/a	-0.0576
B2(LH)	!A1&!A2&B1&C1&C2	0.0100	n/a	n/a	-0.0576
B2(LH)	!A1&A2&!B1&!C1&!C2	0.0100	n/a	n/a	0.0040
B2(LH)	!A1&A2&B1&!C1&!C2	0.0100	n/a	n/a	-0.0576
B2(LH)	A1&!A2&!B1&!C1&!C2	0.0100	n/a	n/a	0.0040
B2(LH)	A1&!A2&B1&!C1&!C2	0.0100	n/a	n/a	-0.0577
B2(LH)	A1&A2&!B1&!C1&!C2	0.0100	n/a	n/a	0.0041
B2(LH)	A1&A2&B1&!C1&!C2	0.0100	n/a	n/a	-0.0576
B2(LH)	!A1&A2&B1&!C1&C2	0.0100	n/a	n/a	-0.0497
B2(LH)	!A1&A2&B1&C1&!C2	0.0100	n/a	n/a	-0.0497
B2(LH)	!A1&A2&B1&C1&C2	0.0100	n/a	n/a	-0.0497
B2(LH)	A1&!A2&B1&!C1&C2	0.0100	n/a	n/a	-0.0497
B2(LH)	A1&!A2&B1&C1&!C2	0.0100	n/a	n/a	-0.0497

continues on next page

Table 239 – continued from previous page

B2(LH)	A1&!A2&B1&C1&C2	0.0100	n/a	n/a	-0.0497
B2(LH)	A1&A2&B1&!C1&C2	0.0100	n/a	n/a	-0.0497
B2(LH)	A1&A2&B1&C1&!C2	0.0100	n/a	n/a	-0.0497
B2(LH)	A1&A2&B1&C1&C2	0.0100	n/a	n/a	-0.0497
C2(HL)	!A1&!A2&!B1&!B2&!C1	0.0100	n/a	n/a	0.0599
C2(HL)	!A1&!A2&!B1&!B2&C1	0.0100	n/a	n/a	0.0597
C2(HL)	!A1&!A2&!B1&B2&!C1	0.0100	n/a	n/a	0.0601
C2(HL)	!A1&!A2&!B1&B2&C1	0.0100	n/a	n/a	0.0596
C2(HL)	!A1&!A2&B1&!B2&!C1	0.0100	n/a	n/a	0.0601
C2(HL)	!A1&!A2&B1&!B2&C1	0.0100	n/a	n/a	0.0596
C2(HL)	!A1&!A2&B1&B2&!C1	0.0100	n/a	n/a	0.0600
C2(HL)	!A1&!A2&B1&B2&C1	0.0100	n/a	n/a	0.0595
C2(HL)	!A1&A2&!B1&!B2&!C1	0.0100	n/a	n/a	0.0610
C2(HL)	!A1&A2&!B1&!B2&C1	0.0100	n/a	n/a	0.0597
C2(HL)	A1&!A2&!B1&!B2&!C1	0.0100	n/a	n/a	0.0610
C2(HL)	A1&!A2&!B1&!B2&C1	0.0100	n/a	n/a	0.0597
C2(HL)	A1&A2&!B1&!B2&!C1	0.0100	n/a	n/a	0.0609
C2(HL)	A1&A2&!B1&!B2&C1	0.0100	n/a	n/a	0.0597
C2(HL)	!A1&A2&!B1&B2&C1	0.0100	n/a	n/a	0.0597
C2(HL)	!A1&A2&B1&!B2&C1	0.0100	n/a	n/a	0.0597
C2(HL)	!A1&A2&B1&B2&C1	0.0100	n/a	n/a	0.0595
C2(HL)	A1&!A2&!B1&B2&C1	0.0100	n/a	n/a	0.0597
C2(HL)	A1&!A2&B1&!B2&C1	0.0100	n/a	n/a	0.0597
C2(HL)	A1&!A2&B1&B2&C1	0.0100	n/a	n/a	0.0595
C2(HL)	A1&A2&!B1&B2&C1	0.0100	n/a	n/a	0.0597
C2(HL)	A1&A2&B1&!B2&C1	0.0100	n/a	n/a	0.0597
C2(HL)	A1&A2&B1&B2&C1	0.0100	n/a	n/a	0.0595
B2(HL)	!A1&!A2&!B1&!C1&!C2	0.0100	n/a	n/a	0.0788
B2(HL)	!A1&!A2&!B1&!C1&C2	0.0100	n/a	n/a	0.0708
B2(HL)	!A1&!A2&!B1&C1&!C2	0.0100	n/a	n/a	0.0708
B2(HL)	!A1&!A2&!B1&C1&C2	0.0100	n/a	n/a	0.0694
B2(HL)	!A1&!A2&B1&!C1&!C2	0.0100	n/a	n/a	0.0807
B2(HL)	!A1&!A2&B1&!C1&C2	0.0100	n/a	n/a	0.0596
B2(HL)	!A1&!A2&B1&C1&!C2	0.0100	n/a	n/a	0.0596
B2(HL)	!A1&!A2&B1&C1&C2	0.0100	n/a	n/a	0.0596
B2(HL)	!A1&A2&!B1&!C1&!C2	0.0100	n/a	n/a	0.0625
B2(HL)	!A1&A2&B1&!C1&!C2	0.0100	n/a	n/a	0.0645
B2(HL)	A1&!A2&!B1&!C1&!C2	0.0100	n/a	n/a	0.0625
B2(HL)	A1&!A2&B1&!C1&!C2	0.0100	n/a	n/a	0.0645
B2(HL)	A1&A2&!B1&!C1&!C2	0.0100	n/a	n/a	0.0624
B2(HL)	A1&A2&B1&!C1&!C2	0.0100	n/a	n/a	0.0643
B2(HL)	!A1&A2&B1&!C1&C2	0.0100	n/a	n/a	0.0596
B2(HL)	!A1&A2&B1&C1&!C2	0.0100	n/a	n/a	0.0596
B2(HL)	!A1&A2&B1&C1&C2	0.0100	n/a	n/a	0.0595
B2(HL)	A1&!A2&B1&!C1&C2	0.0100	n/a	n/a	0.0596
B2(HL)	A1&!A2&B1&C1&!C2	0.0100	n/a	n/a	0.0596
B2(HL)	A1&!A2&B1&C1&C2	0.0100	n/a	n/a	0.0596
B2(HL)	A1&A2&B1&!C1&C2	0.0100	n/a	n/a	0.0595
B2(HL)	A1&A2&B1&C1&!C2	0.0100	n/a	n/a	0.0595
B2(HL)	A1&A2&B1&C1&C2	0.0100	n/a	n/a	0.0595
C2(LH)	!A1&!A2&!B1&!B2&!C1	0.0100	n/a	n/a	-0.0596
C2(LH)	!A1&!A2&!B1&!B2&C1	0.0100	n/a	n/a	-0.0577

continues on next page

Table 239 – continued from previous page

C2(LH)	!A1&!A2&!B1&B2&!C1	0.0100	n/a	n/a	-0.0596
C2(LH)	!A1&!A2&!B1&B2&C1	0.0100	n/a	n/a	-0.0577
C2(LH)	!A1&!A2&B1&!B2&!C1	0.0100	n/a	n/a	-0.0596
C2(LH)	!A1&!A2&B1&!B2&C1	0.0100	n/a	n/a	-0.0577
C2(LH)	!A1&!A2&B1&B2&!C1	0.0100	n/a	n/a	-0.0595
C2(LH)	!A1&!A2&B1&B2&C1	0.0100	n/a	n/a	-0.0577
C2(LH)	!A1&A2&!B1&!B2&!C1	0.0100	n/a	n/a	-0.0596
C2(LH)	!A1&A2&!B1&!B2&C1	0.0100	n/a	n/a	-0.0577
C2(LH)	A1&!A2&!B1&!B2&!C1	0.0100	n/a	n/a	-0.0596
C2(LH)	A1&!A2&!B1&!B2&C1	0.0100	n/a	n/a	-0.0577
C2(LH)	A1&A2&!B1&!B2&!C1	0.0100	n/a	n/a	-0.0596
C2(LH)	A1&A2&!B1&!B2&C1	0.0100	n/a	n/a	-0.0577
C2(LH)	!A1&A2&!B1&B2&C1	0.0100	n/a	n/a	-0.0498
C2(LH)	!A1&A2&B1&!B2&C1	0.0100	n/a	n/a	-0.0498
C2(LH)	!A1&A2&B1&B2&C1	0.0100	n/a	n/a	-0.0498
C2(LH)	A1&!A2&!B1&B2&C1	0.0100	n/a	n/a	-0.0498
C2(LH)	A1&!A2&B1&!B2&C1	0.0100	n/a	n/a	-0.0498
C2(LH)	A1&!A2&B1&B2&C1	0.0100	n/a	n/a	-0.0498
C2(LH)	A1&A2&!B1&B2&C1	0.0100	n/a	n/a	-0.0498
C2(LH)	A1&A2&B1&!B2&C1	0.0100	n/a	n/a	-0.0498
C2(LH)	A1&A2&B1&B2&C1	0.0100	n/a	n/a	-0.0498
A2(LH)	!A1&!B1&!B2&!C1&!C2	0.0100	n/a	n/a	0.0386
A2(LH)	!A1&!B1&!B2&!C1&C2	0.0100	n/a	n/a	0.0387
A2(LH)	!A1&!B1&!B2&C1&!C2	0.0100	n/a	n/a	0.0387
A2(LH)	!A1&!B1&!B2&C1&C2	0.0100	n/a	n/a	0.0387
A2(LH)	!A1&!B1&B2&!C1&!C2	0.0100	n/a	n/a	0.1577
A2(LH)	!A1&B1&!B2&!C1&!C2	0.0100	n/a	n/a	0.1576
A2(LH)	!A1&B1&B2&!C1&!C2	0.0100	n/a	n/a	0.1914
A2(LH)	A1&!B1&!B2&!C1&!C2	0.0100	n/a	n/a	-0.0650
A2(LH)	A1&!B1&!B2&!C1&C2	0.0100	n/a	n/a	-0.0650
A2(LH)	A1&!B1&!B2&C1&!C2	0.0100	n/a	n/a	-0.0650
A2(LH)	A1&!B1&!B2&C1&C2	0.0100	n/a	n/a	-0.0650
A2(LH)	A1&!B1&B2&!C1&!C2	0.0100	n/a	n/a	-0.0650
A2(LH)	A1&B1&!B2&!C1&!C2	0.0100	n/a	n/a	-0.0650
A2(LH)	A1&B1&B2&!C1&!C2	0.0100	n/a	n/a	-0.0650
A2(LH)	A1&!B1&B2&!C1&C2	0.0100	n/a	n/a	-0.0499
A2(LH)	A1&!B1&B2&C1&!C2	0.0100	n/a	n/a	-0.0499
A2(LH)	A1&!B1&B2&C1&C2	0.0100	n/a	n/a	-0.0498
A2(LH)	A1&B1&!B2&!C1&C2	0.0100	n/a	n/a	-0.0499
A2(LH)	A1&B1&!B2&C1&!C2	0.0100	n/a	n/a	-0.0499
A2(LH)	A1&B1&!B2&C1&C2	0.0100	n/a	n/a	-0.0499
A2(LH)	A1&B1&B2&!C1&C2	0.0100	n/a	n/a	-0.0498
A2(LH)	A1&B1&B2&C1&!C2	0.0100	n/a	n/a	-0.0498
A2(LH)	A1&B1&B2&C1&C2	0.0100	n/a	n/a	-0.0498
A1(LH)	!A2&!B1&!B2&!C1&!C2	0.0100	n/a	n/a	0.0379
A1(LH)	!A2&!B1&!B2&!C1&C2	0.0100	n/a	n/a	0.0380
A1(LH)	!A2&!B1&!B2&C1&!C2	0.0100	n/a	n/a	0.0380
A1(LH)	!A2&!B1&!B2&C1&C2	0.0100	n/a	n/a	0.0380
A1(LH)	!A2&!B1&B2&!C1&!C2	0.0100	n/a	n/a	0.1571
A1(LH)	!A2&B1&!B2&!C1&!C2	0.0100	n/a	n/a	0.1570
A1(LH)	!A2&B1&B2&!C1&!C2	0.0100	n/a	n/a	0.1908
A1(LH)	A2&!B1&!B2&!C1&!C2	0.0100	n/a	n/a	-0.0657

continues on next page

Table 239 – continued from previous page

A1(LH)	A2&!B1&!B2&!C1&C2	0.0100	n/a	n/a	-0.0656
A1(LH)	A2&!B1&!B2&C1&!C2	0.0100	n/a	n/a	-0.0656
A1(LH)	A2&!B1&!B2&C1&C2	0.0100	n/a	n/a	-0.0656
A1(LH)	A2&!B1&B2&!C1&!C2	0.0100	n/a	n/a	-0.0656
A1(LH)	A2&B1&!B2&!C1&!C2	0.0100	n/a	n/a	-0.0656
A1(LH)	A2&B1&B2&!C1&!C2	0.0100	n/a	n/a	-0.0656
A1(LH)	A2&!B1&B2&!C1&C2	0.0100	n/a	n/a	-0.0168
A1(LH)	A2&!B1&B2&C1&!C2	0.0100	n/a	n/a	-0.0168
A1(LH)	A2&!B1&B2&C1&C2	0.0100	n/a	n/a	-0.0168
A1(LH)	A2&B1&!B2&!C1&C2	0.0100	n/a	n/a	-0.0168
A1(LH)	A2&B1&!B2&C1&!C2	0.0100	n/a	n/a	-0.0168
A1(LH)	A2&B1&!B2&C1&C2	0.0100	n/a	n/a	-0.0168
A1(LH)	A2&B1&B2&!C1&C2	0.0100	n/a	n/a	-0.0168
A1(LH)	A2&B1&B2&C1&!C2	0.0100	n/a	n/a	-0.0168
A1(LH)	A2&B1&B2&C1&C2	0.0100	n/a	n/a	-0.0168
C1(LH)	!A1&!A2&!B1&!B2&!C2	0.0100	n/a	n/a	-0.0600
C1(LH)	!A1&!A2&!B1&!B2&C2	0.0100	n/a	n/a	-0.0584
C1(LH)	!A1&!A2&!B1&B2&!C2	0.0100	n/a	n/a	-0.0601
C1(LH)	!A1&!A2&!B1&B2&C2	0.0100	n/a	n/a	-0.0583
C1(LH)	!A1&!A2&B1&!B2&!C2	0.0100	n/a	n/a	-0.0601
C1(LH)	!A1&!A2&B1&!B2&C2	0.0100	n/a	n/a	-0.0583
C1(LH)	!A1&!A2&B1&B2&!C2	0.0100	n/a	n/a	-0.0601
C1(LH)	!A1&!A2&B1&B2&C2	0.0100	n/a	n/a	-0.0583
C1(LH)	!A1&A2&!B1&!B2&!C2	0.0100	n/a	n/a	-0.0601
C1(LH)	!A1&A2&!B1&!B2&C2	0.0100	n/a	n/a	-0.0583
C1(LH)	A1&!A2&!B1&!B2&!C2	0.0100	n/a	n/a	-0.0601
C1(LH)	A1&!A2&!B1&!B2&C2	0.0100	n/a	n/a	-0.0583
C1(LH)	A1&A2&!B1&!B2&!C2	0.0100	n/a	n/a	-0.0601
C1(LH)	A1&A2&!B1&!B2&C2	0.0100	n/a	n/a	-0.0583
C1(LH)	!A1&A2&!B1&B2&C2	0.0100	n/a	n/a	-0.0169
C1(LH)	!A1&A2&B1&!B2&C2	0.0100	n/a	n/a	-0.0169
C1(LH)	!A1&A2&B1&B2&C2	0.0100	n/a	n/a	-0.0169
C1(LH)	A1&!A2&!B1&B2&C2	0.0100	n/a	n/a	-0.0169
C1(LH)	A1&!A2&B1&!B2&C2	0.0100	n/a	n/a	-0.0169
C1(LH)	A1&!A2&B1&B2&C2	0.0100	n/a	n/a	-0.0169
C1(LH)	A1&A2&!B1&B2&C2	0.0100	n/a	n/a	-0.0169
C1(LH)	A1&A2&B1&!B2&C2	0.0100	n/a	n/a	-0.0169
C1(LH)	A1&A2&B1&B2&C2	0.0100	n/a	n/a	-0.0169
A2(HL)	!A1&!B1&!B2&!C1&!C2	0.0100	n/a	n/a	0.0671
A2(HL)	!A1&!B1&!B2&!C1&C2	0.0100	n/a	n/a	0.0671
A2(HL)	!A1&!B1&!B2&C1&!C2	0.0100	n/a	n/a	0.0671
A2(HL)	!A1&!B1&!B2&C1&C2	0.0100	n/a	n/a	0.0671
A2(HL)	!A1&!B1&B2&!C1&!C2	0.0100	n/a	n/a	0.0670
A2(HL)	!A1&B1&!B2&!C1&!C2	0.0100	n/a	n/a	0.0670
A2(HL)	!A1&B1&B2&!C1&!C2	0.0100	n/a	n/a	0.0670
A2(HL)	A1&!B1&!B2&!C1&!C2	0.0100	n/a	n/a	0.0686
A2(HL)	A1&!B1&!B2&!C1&C2	0.0100	n/a	n/a	0.0687
A2(HL)	A1&!B1&!B2&C1&!C2	0.0100	n/a	n/a	0.0686
A2(HL)	A1&!B1&!B2&C1&C2	0.0100	n/a	n/a	0.0686
A2(HL)	A1&!B1&B2&!C1&!C2	0.0100	n/a	n/a	0.0689
A2(HL)	A1&B1&!B2&!C1&!C2	0.0100	n/a	n/a	0.0689
A2(HL)	A1&B1&B2&!C1&!C2	0.0100	n/a	n/a	0.0686

continues on next page

Table 239 – continued from previous page

A2(HL)	A1&!B1&B2&!C1&C2	0.0100	n/a	n/a	0.0596
A2(HL)	A1&!B1&B2&C1&!C2	0.0100	n/a	n/a	0.0596
A2(HL)	A1&!B1&B2&C1&C2	0.0100	n/a	n/a	0.0596
A2(HL)	A1&B1&!B2&!C1&C2	0.0100	n/a	n/a	0.0596
A2(HL)	A1&B1&!B2&C1&!C2	0.0100	n/a	n/a	0.0596
A2(HL)	A1&B1&!B2&C1&C2	0.0100	n/a	n/a	0.0596
A2(HL)	A1&B1&B2&!C1&C2	0.0100	n/a	n/a	0.0597
A2(HL)	A1&B1&B2&C1&!C2	0.0100	n/a	n/a	0.0597
A2(HL)	A1&B1&B2&C1&C2	0.0100	n/a	n/a	0.0597
B1(HL)	!A1&!A2&!B2&!C1&!C2	0.0100	n/a	n/a	0.0790
B1(HL)	!A1&!A2&!B2&!C1&C2	0.0100	n/a	n/a	0.0710
B1(HL)	!A1&!A2&!B2&C1&!C2	0.0100	n/a	n/a	0.0710
B1(HL)	!A1&!A2&!B2&C1&C2	0.0100	n/a	n/a	0.0696
B1(HL)	!A1&!A2&B2&!C1&!C2	0.0100	n/a	n/a	0.0807
B1(HL)	!A1&!A2&B2&!C1&C2	0.0100	n/a	n/a	0.0600
B1(HL)	!A1&!A2&B2&C1&!C2	0.0100	n/a	n/a	0.0599
B1(HL)	!A1&!A2&B2&C1&C2	0.0100	n/a	n/a	0.0599
B1(HL)	!A1&A2&!B2&!C1&!C2	0.0100	n/a	n/a	0.0628
B1(HL)	!A1&A2&B2&!C1&!C2	0.0100	n/a	n/a	0.0650
B1(HL)	A1&!A2&!B2&!C1&!C2	0.0100	n/a	n/a	0.0628
B1(HL)	A1&!A2&B2&!C1&!C2	0.0100	n/a	n/a	0.0649
B1(HL)	A1&A2&!B2&!C1&!C2	0.0100	n/a	n/a	0.0627
B1(HL)	A1&A2&B2&!C1&!C2	0.0100	n/a	n/a	0.0648
B1(HL)	!A1&A2&B2&!C1&C2	0.0100	n/a	n/a	0.0397
B1(HL)	!A1&A2&B2&C1&!C2	0.0100	n/a	n/a	0.0397
B1(HL)	!A1&A2&B2&C1&C2	0.0100	n/a	n/a	0.0397
B1(HL)	A1&!A2&B2&!C1&C2	0.0100	n/a	n/a	0.0397
B1(HL)	A1&!A2&B2&C1&!C2	0.0100	n/a	n/a	0.0397
B1(HL)	A1&!A2&B2&C1&C2	0.0100	n/a	n/a	0.0397
B1(HL)	A1&A2&B2&!C1&C2	0.0100	n/a	n/a	0.0397
B1(HL)	A1&A2&B2&C1&!C2	0.0100	n/a	n/a	0.0397
B1(HL)	A1&A2&B2&C1&C2	0.0100	n/a	n/a	0.0397
C1(HL)	!A1&!A2&!B1&!B2&!C2	0.0100	n/a	n/a	0.0601
C1(HL)	!A1&!A2&!B1&!B2&C2	0.0100	n/a	n/a	0.0599
C1(HL)	!A1&!A2&!B1&B2&!C2	0.0100	n/a	n/a	0.0604
C1(HL)	!A1&!A2&!B1&B2&C2	0.0100	n/a	n/a	0.0600
C1(HL)	!A1&!A2&B1&!B2&!C2	0.0100	n/a	n/a	0.0604
C1(HL)	!A1&!A2&B1&!B2&C2	0.0100	n/a	n/a	0.0600
C1(HL)	!A1&!A2&B1&B2&!C2	0.0100	n/a	n/a	0.0603
C1(HL)	!A1&!A2&B1&B2&C2	0.0100	n/a	n/a	0.0599
C1(HL)	!A1&A2&!B1&!B2&!C2	0.0100	n/a	n/a	0.0612
C1(HL)	!A1&A2&!B1&!B2&C2	0.0100	n/a	n/a	0.0600
C1(HL)	A1&!A2&!B1&!B2&!C2	0.0100	n/a	n/a	0.0612
C1(HL)	A1&!A2&!B1&!B2&C2	0.0100	n/a	n/a	0.0600
C1(HL)	A1&A2&!B1&!B2&!C2	0.0100	n/a	n/a	0.0612
C1(HL)	A1&A2&!B1&!B2&C2	0.0100	n/a	n/a	0.0599
C1(HL)	!A1&A2&!B1&B2&C2	0.0100	n/a	n/a	0.0397
C1(HL)	!A1&A2&B1&!B2&C2	0.0100	n/a	n/a	0.0397
C1(HL)	!A1&A2&B1&B2&C2	0.0100	n/a	n/a	0.0397
C1(HL)	A1&!A2&!B1&B2&C2	0.0100	n/a	n/a	0.0397
C1(HL)	A1&!A2&B1&!B2&C2	0.0100	n/a	n/a	0.0397
C1(HL)	A1&!A2&B1&B2&C2	0.0100	n/a	n/a	0.0397

continues on next page

Table 239 – continued from previous page

C1(HL)	A1&A2&!B1&B2&C2	0.0100	n/a	n/a	0.0397
C1(HL)	A1&A2&B1&!B2&C2	0.0100	n/a	n/a	0.0397
C1(HL)	A1&A2&B1&B2&C2	0.0100	n/a	n/a	0.0397
A1(HL)	!A2&!B1&!B2&!C1&!C2	0.0100	n/a	n/a	0.0674
A1(HL)	!A2&!B1&!B2&!C1&C2	0.0100	n/a	n/a	0.0673
A1(HL)	!A2&!B1&!B2&C1&!C2	0.0100	n/a	n/a	0.0673
A1(HL)	!A2&!B1&!B2&C1&C2	0.0100	n/a	n/a	0.0673
A1(HL)	!A2&!B1&B2&!C1&!C2	0.0100	n/a	n/a	0.0674
A1(HL)	!A2&B1&!B2&!C1&!C2	0.0100	n/a	n/a	0.0674
A1(HL)	!A2&B1&B2&!C1&!C2	0.0100	n/a	n/a	0.0674
A1(HL)	A2&!B1&!B2&!C1&!C2	0.0100	n/a	n/a	0.0688
A1(HL)	A2&!B1&!B2&!C1&C2	0.0100	n/a	n/a	0.0689
A1(HL)	A2&!B1&!B2&C1&!C2	0.0100	n/a	n/a	0.0689
A1(HL)	A2&!B1&!B2&C1&C2	0.0100	n/a	n/a	0.0689
A1(HL)	A2&!B1&B2&!C1&!C2	0.0100	n/a	n/a	0.0690
A1(HL)	A2&B1&!B2&!C1&!C2	0.0100	n/a	n/a	0.0690
A1(HL)	A2&B1&B2&!C1&!C2	0.0100	n/a	n/a	0.0688
A1(HL)	A2&!B1&B2&!C1&C2	0.0100	n/a	n/a	0.0384
A1(HL)	A2&!B1&B2&C1&!C2	0.0100	n/a	n/a	0.0384
A1(HL)	A2&!B1&B2&C1&C2	0.0100	n/a	n/a	0.0384
A1(HL)	A2&B1&!B2&!C1&C2	0.0100	n/a	n/a	0.0384
A1(HL)	A2&B1&!B2&C1&!C2	0.0100	n/a	n/a	0.0384
A1(HL)	A2&B1&!B2&C1&C2	0.0100	n/a	n/a	0.0384
A1(HL)	A2&B1&B2&!C1&C2	0.0100	n/a	n/a	0.0384
A1(HL)	A2&B1&B2&C1&!C2	0.0100	n/a	n/a	0.0384
A1(HL)	A2&B1&B2&C1&C2	0.0100	n/a	n/a	0.0384
B1(LH)	!A1&!A2&!B2&!C1&!C2	0.0100	n/a	n/a	-0.0601
B1(LH)	!A1&!A2&!B2&!C1&C2	0.0100	n/a	n/a	-0.0601
B1(LH)	!A1&!A2&!B2&C1&!C2	0.0100	n/a	n/a	-0.0600
B1(LH)	!A1&!A2&!B2&C1&C2	0.0100	n/a	n/a	-0.0601
B1(LH)	!A1&!A2&B2&!C1&!C2	0.0100	n/a	n/a	-0.0584
B1(LH)	!A1&!A2&B2&!C1&C2	0.0100	n/a	n/a	-0.0583
B1(LH)	!A1&!A2&B2&C1&!C2	0.0100	n/a	n/a	-0.0583
B1(LH)	!A1&!A2&B2&C1&C2	0.0100	n/a	n/a	-0.0583
B1(LH)	!A1&A2&!B2&!C1&!C2	0.0100	n/a	n/a	0.0035
B1(LH)	!A1&A2&B2&!C1&!C2	0.0100	n/a	n/a	-0.0583
B1(LH)	A1&!A2&!B2&!C1&!C2	0.0100	n/a	n/a	0.0035
B1(LH)	A1&!A2&B2&!C1&!C2	0.0100	n/a	n/a	-0.0583
B1(LH)	A1&A2&!B2&!C1&!C2	0.0100	n/a	n/a	0.0036
B1(LH)	A1&A2&B2&!C1&!C2	0.0100	n/a	n/a	-0.0583
B1(LH)	!A1&A2&B2&!C1&C2	0.0100	n/a	n/a	-0.0169
B1(LH)	!A1&A2&B2&C1&!C2	0.0100	n/a	n/a	-0.0169
B1(LH)	!A1&A2&B2&C1&C2	0.0100	n/a	n/a	-0.0169
B1(LH)	A1&!A2&B2&!C1&C2	0.0100	n/a	n/a	-0.0169
B1(LH)	A1&!A2&B2&C1&!C2	0.0100	n/a	n/a	-0.0169
B1(LH)	A1&!A2&B2&C1&C2	0.0100	n/a	n/a	-0.0169
B1(LH)	A1&A2&B2&!C1&C2	0.0100	n/a	n/a	-0.0169
B1(LH)	A1&A2&B2&C1&!C2	0.0100	n/a	n/a	-0.0169
B1(LH)	A1&A2&B2&C1&C2	0.0100	n/a	n/a	-0.0169

LEAKAGE POWER

When Condition	Power (nW)
!A1&!A2&!B1&!B2&!C1&!C2	0.1005
!A1&!A2&!B1&!B2&!C1&C2	0.1005
!A1&!A2&!B1&!B2&C1&!C2	0.1005
!A1&!A2&!B1&!B2&C1&C2	0.1005
!A1&!A2&!B1&B2&!C1&!C2	0.1007
!A1&!A2&!B1&B2&!C1&C2	0.1012
!A1&!A2&!B1&B2&C1&!C2	0.1012
!A1&!A2&!B1&B2&C1&C2	0.1012
!A1&!A2&B1&!B2&!C1&!C2	0.1007
!A1&!A2&B1&!B2&!C1&C2	0.1012
!A1&!A2&B1&!B2&C1&!C2	0.1012
!A1&!A2&B1&!B2&C1&C2	0.1012
!A1&!A2&B1&B2&!C1&!C2	0.1007
!A1&!A2&B1&B2&!C1&C2	0.1012
!A1&!A2&B1&B2&C1&!C2	0.1012
!A1&!A2&B1&B2&C1&C2	0.1012
!A1&A2&!B1&!B2&!C1&!C2	0.1800
!A1&A2&!B1&!B2&!C1&C2	0.1804
!A1&A2&!B1&!B2&C1&!C2	0.1804
!A1&A2&!B1&!B2&C1&C2	0.1804
!A1&A2&!B1&B2&!C1&!C2	0.2581
!A1&A2&B1&!B2&!C1&!C2	0.2581
!A1&A2&B1&B2&!C1&!C2	0.2584
A1&!A2&!B1&!B2&!C1&!C2	0.1800
A1&!A2&!B1&!B2&!C1&C2	0.1804
A1&!A2&!B1&!B2&C1&!C2	0.1804
A1&!A2&!B1&!B2&C1&C2	0.1804
A1&!A2&!B1&B2&!C1&!C2	0.2581
A1&!A2&B1&!B2&!C1&!C2	0.2581
A1&!A2&B1&B2&!C1&!C2	0.2584
A1&A2&!B1&!B2&!C1&!C2	0.1804
A1&A2&!B1&!B2&!C1&C2	0.1808
A1&A2&!B1&!B2&C1&!C2	0.1808
A1&A2&!B1&!B2&C1&C2	0.1808
A1&A2&!B1&B2&!C1&!C2	0.2585
A1&A2&B1&!B2&!C1&!C2	0.2585
A1&A2&B1&B2&!C1&!C2	0.2589
!A1&A2&!B1&B2&!C1&C2	0.2369
!A1&A2&!B1&B2&C1&!C2	0.2015
!A1&A2&!B1&B2&C1&C2	0.2015
!A1&A2&B1&!B2&!C1&C2	0.2015
!A1&A2&B1&!B2&C1&!C2	0.1660
!A1&A2&B1&!B2&C1&C2	0.1660
!A1&A2&B1&B2&!C1&C2	0.2015
!A1&A2&B1&B2&C1&!C2	0.1660
!A1&A2&B1&B2&C1&C2	0.1660
A1&!A2&!B1&B2&!C1&C2	0.2015
A1&!A2&!B1&B2&C1&!C2	0.1660

continues on next page

Table 240 – continued from previous page

A1&!A2&!B1&B2&C1&C2	0.1660
A1&!A2&B1&!B2&!C1&C2	0.1660
A1&!A2&B1&!B2&C1&!C2	0.1306
A1&!A2&B1&!B2&C1&C2	0.1306
A1&!A2&B1&B2&!C1&C2	0.1660
A1&!A2&B1&B2&C1&!C2	0.1306
A1&!A2&B1&B2&C1&C2	0.1306
A1&A2&!B1&B2&!C1&C2	0.2015
A1&A2&!B1&B2&C1&!C2	0.1660
A1&A2&!B1&B2&C1&C2	0.1660
A1&A2&B1&!B2&!C1&C2	0.1660
A1&A2&B1&!B2&C1&!C2	0.1306
A1&A2&B1&!B2&C1&C2	0.1306
A1&A2&B1&B2&!C1&C2	0.1660
A1&A2&B1&B2&C1&!C2	0.1306
A1&A2&B1&B2&C1&C2	0.1306

gf180mcu_fd_sc_mcu9t5v0__oai222_2

gf180mcu_fd_sc_mcu9t5v0__oai222_2 symbol

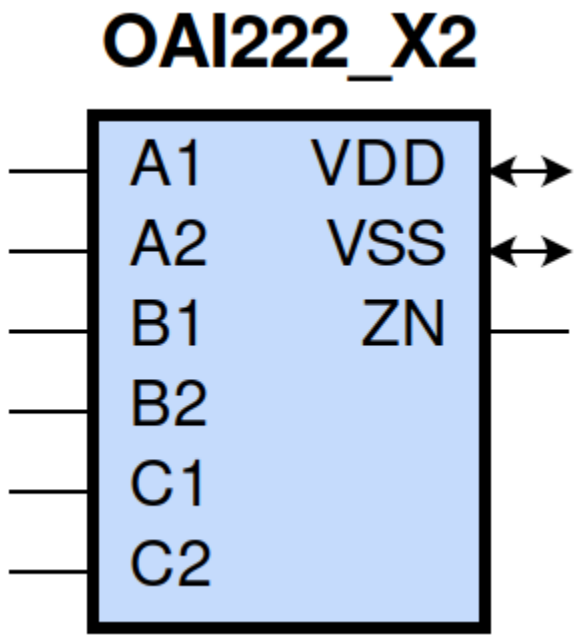

gf180mcu_fd_sc_mcu9t5v0__oai222_2 schematic

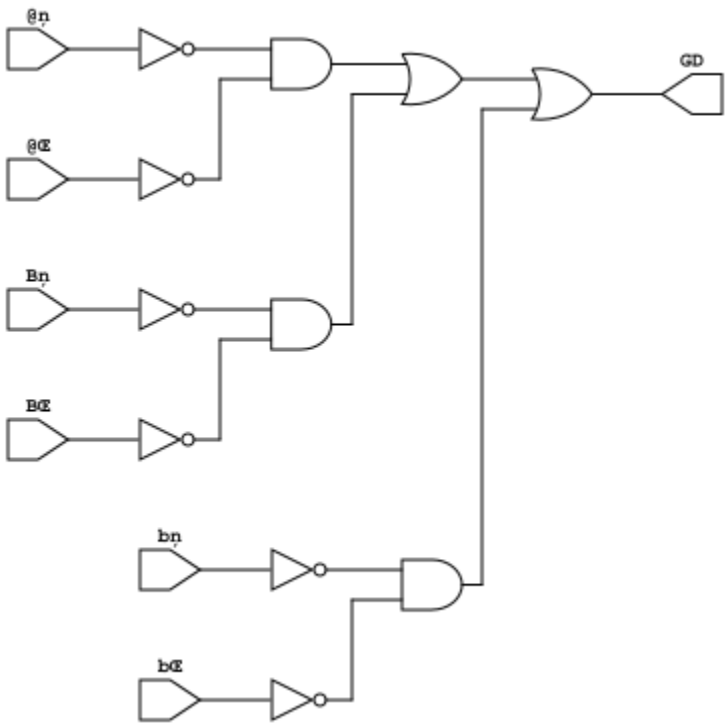

gf180mcu_fd_sc_mcu9t5v0__oai222_2 layout

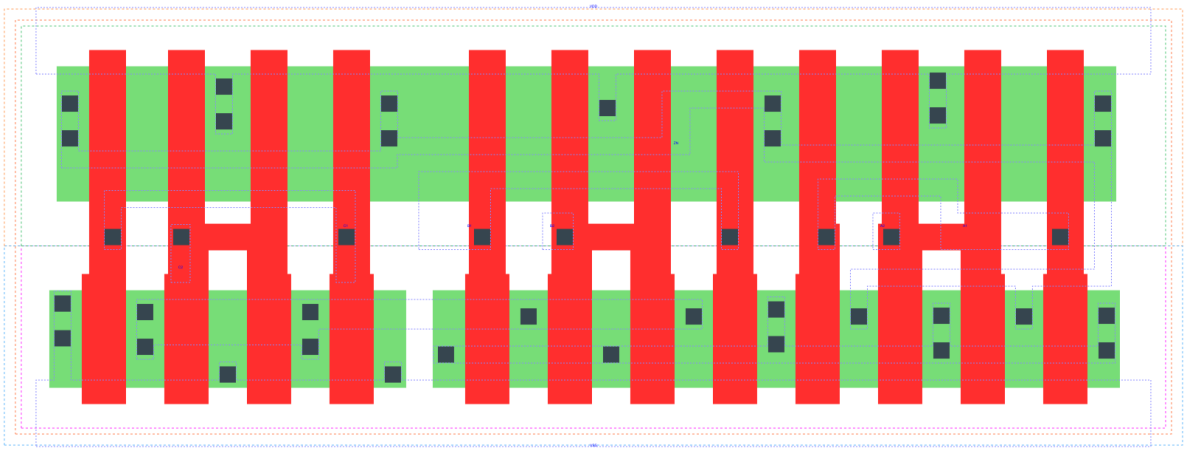

OAI222_X2 is a three 2-input OR into 3-input NAND with 2X drive strength

Attributes

Attribute	Value
area	76.204800 μm^2

OUTPUT FUNCTIONS

Output Pin	Function
ZN	(((!A1)&(!A2))|((!B1)&(!B2))|((!C1)&(!C2)))

TRUTH TABLE FOR ZN

A1	A2	B1	B2	C1	C2	ZN
0	0	?	?	?	?	1
?	?	0	0	?	?	1
?	?	?	?	0	0	1
1	?	1	?	1	?	0
1	?	1	?	?	1	0
1	?	?	1	1	?	0
1	?	?	1	?	1	0
?	1	1	?	1	?	0
?	1	1	?	?	1	0
?	1	?	1	1	?	0
?	1	?	1	?	1	0

FUNCTIONAL SCHEMATIC

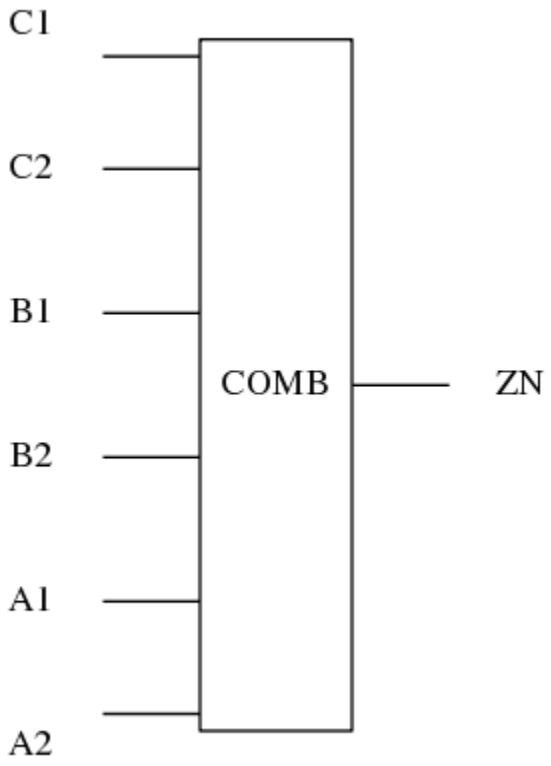

PIN CAPACITANCE (pf)

Pin	Type	Capacitance (pf)
C1	input	0.0140
C2	input	0.0129
B1	input	0.0142
B2	input	0.0127
A1	input	0.0144
A2	input	0.0132

DELAY AND OUTPUT TRANSITION TIME corresponding to min slew and load

Input Pin	Output	When Condition	Tin (ns)	Out Load (pf)	Delay (ns)	Tout (ns)
C1(LH)	ZN(HL)	!A1&A2&!B1&B2&!C2	0.0100	0.0010	0.2197	0.1088
C1(LH)	ZN(HL)	!A1&A2&B1&!B2&!C2	0.0100	0.0010	0.1861	0.0874
C1(LH)	ZN(HL)	!A1&A2&B1&B2&!C2	0.0100	0.0010	0.1690	0.0734
C1(LH)	ZN(HL)	A1&!A2&!B1&B2&!C2	0.0100	0.0010	0.1861	0.0874
C1(LH)	ZN(HL)	A1&!A2&B1&!B2&!C2	0.0100	0.0010	0.1545	0.0658

continues on next page

Table 241 – continued from previous page

C1(LH)	ZN(HL)	A1&!A2&B1&B2&!C2	0.0100	0.0010	0.1421	0.0560
C1(LH)	ZN(HL)	A1&A2&!B1&B2&!C2	0.0100	0.0010	0.1645	0.0888
C1(LH)	ZN(HL)	A1&A2&B1&!B2&!C2	0.0100	0.0010	0.1385	0.0700
C1(LH)	ZN(HL)	A1&A2&B1&B2&!C2	0.0100	0.0010	0.1222	0.0565
C1(HL)	ZN(LH)	!A1&A2&!B1&B2&!C2	0.0100	0.0010	0.2951	0.3038
C1(HL)	ZN(LH)	!A1&A2&B1&!B2&!C2	0.0100	0.0010	0.2782	0.2573
C1(HL)	ZN(LH)	!A1&A2&B1&B2&!C2	0.0100	0.0010	0.2976	0.2717
C1(HL)	ZN(LH)	A1&!A2&!B1&B2&!C2	0.0100	0.0010	0.2782	0.2570
C1(HL)	ZN(LH)	A1&!A2&B1&!B2&!C2	0.0100	0.0010	0.2630	0.2096
C1(HL)	ZN(LH)	A1&!A2&B1&B2&!C2	0.0100	0.0010	0.2816	0.2235
C1(HL)	ZN(LH)	A1&A2&!B1&B2&!C2	0.0100	0.0010	0.3075	0.2755
C1(HL)	ZN(LH)	A1&A2&B1&!B2&!C2	0.0100	0.0010	0.2934	0.2297
C1(HL)	ZN(LH)	A1&A2&B1&B2&!C2	0.0100	0.0010	0.3143	0.2449
C2(LH)	ZN(HL)	!A1&A2&!B1&B2&!C1	0.0100	0.0010	0.2507	0.1305
C2(LH)	ZN(HL)	!A1&A2&B1&!B2&!C1	0.0100	0.0010	0.2162	0.1088
C2(LH)	ZN(HL)	!A1&A2&B1&B2&!C1	0.0100	0.0010	0.1948	0.0915
C2(LH)	ZN(HL)	A1&!A2&!B1&B2&!C1	0.0100	0.0010	0.2163	0.1088
C2(LH)	ZN(HL)	A1&!A2&B1&!B2&!C1	0.0100	0.0010	0.1829	0.0877
C2(LH)	ZN(HL)	A1&!A2&B1&B2&!C1	0.0100	0.0010	0.1663	0.0737
C2(LH)	ZN(HL)	A1&A2&!B1&B2&!C1	0.0100	0.0010	0.1895	0.1071
C2(LH)	ZN(HL)	A1&A2&B1&!B2&!C1	0.0100	0.0010	0.1618	0.0888
C2(LH)	ZN(HL)	A1&A2&B1&B2&!C1	0.0100	0.0010	0.1405	0.0711
C2(HL)	ZN(LH)	!A1&A2&!B1&B2&!C1	0.0100	0.0010	0.3193	0.3038
C2(HL)	ZN(LH)	!A1&A2&B1&!B2&!C1	0.0100	0.0010	0.3025	0.2573
C2(HL)	ZN(LH)	!A1&A2&B1&B2&!C1	0.0100	0.0010	0.3219	0.2718
C2(HL)	ZN(LH)	A1&!A2&!B1&B2&!C1	0.0100	0.0010	0.3025	0.2571
C2(HL)	ZN(LH)	A1&!A2&B1&!B2&!C1	0.0100	0.0010	0.2871	0.2092
C2(HL)	ZN(LH)	A1&!A2&B1&B2&!C1	0.0100	0.0010	0.3058	0.2234
C2(HL)	ZN(LH)	A1&A2&!B1&B2&!C1	0.0100	0.0010	0.3318	0.2755
C2(HL)	ZN(LH)	A1&A2&B1&!B2&!C1	0.0100	0.0010	0.3178	0.2296
C2(HL)	ZN(LH)	A1&A2&B1&B2&!C1	0.0100	0.0010	0.3385	0.2447
B1(LH)	ZN(HL)	!A1&A2&!B2&!C1&C2	0.0100	0.0010	0.1948	0.1090
B1(LH)	ZN(HL)	!A1&A2&!B2&C1&!C2	0.0100	0.0010	0.1613	0.0873
B1(LH)	ZN(HL)	!A1&A2&!B2&C1&C2	0.0100	0.0010	0.1406	0.0723
B1(LH)	ZN(HL)	A1&!A2&!B2&!C1&C2	0.0100	0.0010	0.1611	0.0873
B1(LH)	ZN(HL)	A1&!A2&!B2&C1&!C2	0.0100	0.0010	0.1298	0.0657
B1(LH)	ZN(HL)	A1&!A2&!B2&C1&C2	0.0100	0.0010	0.1140	0.0538
B1(LH)	ZN(HL)	A1&A2&!B2&!C1&C2	0.0100	0.0010	0.1394	0.0886
B1(LH)	ZN(HL)	A1&A2&!B2&C1&!C2	0.0100	0.0010	0.1136	0.0698
B1(LH)	ZN(HL)	A1&A2&!B2&C1&C2	0.0100	0.0010	0.0981	0.0535
B1(HL)	ZN(LH)	!A1&A2&!B2&!C1&C2	0.0100	0.0010	0.2326	0.2480
B1(HL)	ZN(LH)	!A1&A2&!B2&C1&!C2	0.0100	0.0010	0.2191	0.2040
B1(HL)	ZN(LH)	!A1&A2&!B2&C1&C2	0.0100	0.0010	0.2176	0.2041
B1(HL)	ZN(LH)	A1&!A2&!B2&!C1&C2	0.0100	0.0010	0.2191	0.2036
B1(HL)	ZN(LH)	A1&!A2&!B2&C1&!C2	0.0100	0.0010	0.2074	0.1603
B1(HL)	ZN(LH)	A1&!A2&!B2&C1&C2	0.0100	0.0010	0.2058	0.1600
B1(HL)	ZN(LH)	A1&A2&!B2&!C1&C2	0.0100	0.0010	0.2436	0.2215
B1(HL)	ZN(LH)	A1&A2&!B2&C1&!C2	0.0100	0.0010	0.2320	0.1784
B1(HL)	ZN(LH)	A1&A2&!B2&C1&C2	0.0100	0.0010	0.2307	0.1784
B2(HL)	ZN(LH)	!A1&A2&!B1&!C1&C2	0.0100	0.0010	0.2573	0.2480
B2(HL)	ZN(LH)	!A1&A2&!B1&C1&!C2	0.0100	0.0010	0.2439	0.2039
B2(HL)	ZN(LH)	!A1&A2&!B1&C1&C2	0.0100	0.0010	0.2423	0.2040

continues on next page

Table 241 – continued from previous page

B2(HL)	ZN(LH)	A1&!A2&!B1&!C1&C2	0.0100	0.0010	0.2437	0.2036
B2(HL)	ZN(LH)	A1&!A2&!B1&C1&!C2	0.0100	0.0010	0.2319	0.1600
B2(HL)	ZN(LH)	A1&!A2&!B1&C1&C2	0.0100	0.0010	0.2305	0.1600
B2(HL)	ZN(LH)	A1&A2&!B1&!C1&C2	0.0100	0.0010	0.2682	0.2215
B2(HL)	ZN(LH)	A1&A2&!B1&C1&!C2	0.0100	0.0010	0.2566	0.1784
B2(HL)	ZN(LH)	A1&A2&!B1&C1&C2	0.0100	0.0010	0.2553	0.1785
B2(LH)	ZN(HL)	!A1&A2&!B1&!C1&C2	0.0100	0.0010	0.2258	0.1305
B2(LH)	ZN(HL)	!A1&A2&!B1&C1&!C2	0.0100	0.0010	0.1916	0.1090
B2(LH)	ZN(HL)	!A1&A2&!B1&C1&C2	0.0100	0.0010	0.1663	0.0905
B2(LH)	ZN(HL)	A1&!A2&!B1&!C1&C2	0.0100	0.0010	0.1914	0.1089
B2(LH)	ZN(HL)	A1&!A2&!B1&C1&!C2	0.0100	0.0010	0.1582	0.0877
B2(LH)	ZN(HL)	A1&!A2&!B1&C1&C2	0.0100	0.0010	0.1378	0.0719
B2(LH)	ZN(HL)	A1&A2&!B1&!C1&C2	0.0100	0.0010	0.1645	0.1070
B2(LH)	ZN(HL)	A1&A2&!B1&C1&!C2	0.0100	0.0010	0.1369	0.0888
B2(LH)	ZN(HL)	A1&A2&!B1&C1&C2	0.0100	0.0010	0.1164	0.0685
A1(HL)	ZN(LH)	!A2&!B1&B2&!C1&C2	0.0100	0.0010	0.1462	0.1811
A1(HL)	ZN(LH)	!A2&!B1&B2&C1&!C2	0.0100	0.0010	0.1358	0.1383
A1(HL)	ZN(LH)	!A2&!B1&B2&C1&C2	0.0100	0.0010	0.1356	0.1380
A1(HL)	ZN(LH)	!A2&B1&!B2&!C1&C2	0.0100	0.0010	0.1357	0.1380
A1(HL)	ZN(LH)	!A2&B1&!B2&C1&!C2	0.0100	0.0010	0.1267	0.0980
A1(HL)	ZN(LH)	!A2&B1&!B2&C1&C2	0.0100	0.0010	0.1266	0.0980
A1(HL)	ZN(LH)	!A2&B1&B2&!C1&C2	0.0100	0.0010	0.1350	0.1379
A1(HL)	ZN(LH)	!A2&B1&B2&C1&!C2	0.0100	0.0010	0.1259	0.0980
A1(HL)	ZN(LH)	!A2&B1&B2&C1&C2	0.0100	0.0010	0.1257	0.0979
A1(LH)	ZN(HL)	!A2&!B1&B2&!C1&C2	0.0100	0.0010	0.1459	0.1084
A1(LH)	ZN(HL)	!A2&!B1&B2&C1&!C2	0.0100	0.0010	0.1127	0.0861
A1(LH)	ZN(HL)	!A2&!B1&B2&C1&C2	0.0100	0.0010	0.1030	0.0719
A1(LH)	ZN(HL)	!A2&B1&!B2&!C1&C2	0.0100	0.0010	0.1124	0.0862
A1(LH)	ZN(HL)	!A2&B1&!B2&C1&!C2	0.0100	0.0010	0.0819	0.0628
A1(LH)	ZN(HL)	!A2&B1&!B2&C1&C2	0.0100	0.0010	0.0768	0.0526
A1(LH)	ZN(HL)	!A2&B1&B2&!C1&C2	0.0100	0.0010	0.0975	0.0711
A1(LH)	ZN(HL)	!A2&B1&B2&C1&!C2	0.0100	0.0010	0.0722	0.0510
A1(LH)	ZN(HL)	!A2&B1&B2&C1&C2	0.0100	0.0010	0.0673	0.0422
A2(HL)	ZN(LH)	!A1&!B1&B2&!C1&C2	0.0100	0.0010	0.1712	0.1814
A2(HL)	ZN(LH)	!A1&!B1&B2&C1&!C2	0.0100	0.0010	0.1607	0.1383
A2(HL)	ZN(LH)	!A1&!B1&B2&C1&C2	0.0100	0.0010	0.1606	0.1383
A2(HL)	ZN(LH)	!A1&B1&!B2&!C1&C2	0.0100	0.0010	0.1607	0.1380
A2(HL)	ZN(LH)	!A1&B1&!B2&C1&!C2	0.0100	0.0010	0.1518	0.0981
A2(HL)	ZN(LH)	!A1&B1&!B2&C1&C2	0.0100	0.0010	0.1517	0.0981
A2(HL)	ZN(LH)	!A1&B1&B2&!C1&C2	0.0100	0.0010	0.1598	0.1381
A2(HL)	ZN(LH)	!A1&B1&B2&C1&!C2	0.0100	0.0010	0.1508	0.0982
A2(HL)	ZN(LH)	!A1&B1&B2&C1&C2	0.0100	0.0010	0.1506	0.0982
A2(LH)	ZN(HL)	!A1&!B1&B2&!C1&C2	0.0100	0.0010	0.1772	0.1305
A2(LH)	ZN(HL)	!A1&!B1&B2&C1&!C2	0.0100	0.0010	0.1429	0.1084
A2(LH)	ZN(HL)	!A1&!B1&B2&C1&C2	0.0100	0.0010	0.1288	0.0902
A2(LH)	ZN(HL)	!A1&B1&!B2&!C1&C2	0.0100	0.0010	0.1427	0.1084
A2(LH)	ZN(HL)	!A1&B1&!B2&C1&!C2	0.0100	0.0010	0.1096	0.0862
A2(LH)	ZN(HL)	!A1&B1&!B2&C1&C2	0.0100	0.0010	0.1003	0.0721
A2(LH)	ZN(HL)	!A1&B1&B2&!C1&C2	0.0100	0.0010	0.1230	0.0903
A2(LH)	ZN(HL)	!A1&B1&B2&C1&!C2	0.0100	0.0010	0.0950	0.0711
A2(LH)	ZN(HL)	!A1&B1&B2&C1&C2	0.0100	0.0010	0.0861	0.0577

DYNAMIC ENERGY

Input Pin	When Condition	Tin (ns)	Output	Out Load (pf)	Energy (uW/MHz)
A1	!A2&!B1&B2&!C1&C2	0.0100	ZN(LH)	0.0010	0.5989
A1	!A2&!B1&B2&C1&!C2	0.0100	ZN(LH)	0.0010	0.5100
A1	!A2&!B1&B2&C1&C2	0.0100	ZN(LH)	0.0010	0.5099
A1	!A2&B1&!B2&!C1&C2	0.0100	ZN(LH)	0.0010	0.5103
A1	!A2&B1&!B2&C1&!C2	0.0100	ZN(LH)	0.0010	0.4214
A1	!A2&B1&!B2&C1&C2	0.0100	ZN(LH)	0.0010	0.4211
A1	!A2&B1&B2&!C1&C2	0.0100	ZN(LH)	0.0010	0.5080
A1	!A2&B1&B2&C1&!C2	0.0100	ZN(LH)	0.0010	0.4191
A1	!A2&B1&B2&C1&C2	0.0100	ZN(LH)	0.0010	0.4186
B2	!A1&A2&!B1&!C1&C2	0.0100	ZN(LH)	0.0010	0.9714
B2	!A1&A2&!B1&C1&!C2	0.0100	ZN(LH)	0.0010	0.8826
B2	!A1&A2&!B1&C1&C2	0.0100	ZN(LH)	0.0010	0.8790
B2	A1&!A2&!B1&!C1&C2	0.0100	ZN(LH)	0.0010	0.8821
B2	A1&!A2&!B1&C1&!C2	0.0100	ZN(LH)	0.0010	0.7932
B2	A1&!A2&!B1&C1&C2	0.0100	ZN(LH)	0.0010	0.7899
B2	A1&A2&!B1&!C1&C2	0.0100	ZN(LH)	0.0010	0.9544
B2	A1&A2&!B1&C1&!C2	0.0100	ZN(LH)	0.0010	0.8652
B2	A1&A2&!B1&C1&C2	0.0100	ZN(LH)	0.0010	0.8621
B1	!A1&A2&!B2&!C1&C2	0.0100	ZN(HL)	0.0010	0.2564
B1	!A1&A2&!B2&C1&!C2	0.0100	ZN(HL)	0.0010	0.1806
B1	!A1&A2&!B2&C1&C2	0.0100	ZN(HL)	0.0010	0.1808
B1	A1&!A2&!B2&!C1&C2	0.0100	ZN(HL)	0.0010	0.1794
B1	A1&!A2&!B2&C1&!C2	0.0100	ZN(HL)	0.0010	0.1035
B1	A1&!A2&!B2&C1&C2	0.0100	ZN(HL)	0.0010	0.1034
B1	A1&A2&!B2&!C1&C2	0.0100	ZN(HL)	0.0010	0.1798
B1	A1&A2&!B2&C1&!C2	0.0100	ZN(HL)	0.0010	0.1037
B1	A1&A2&!B2&C1&C2	0.0100	ZN(HL)	0.0010	0.1034
A2	!A1&!B1&B2&!C1&C2	0.0100	ZN(LH)	0.0010	0.6890
A2	!A1&!B1&B2&C1&!C2	0.0100	ZN(LH)	0.0010	0.6003
A2	!A1&!B1&B2&C1&C2	0.0100	ZN(LH)	0.0010	0.6000
A2	!A1&B1&!B2&!C1&C2	0.0100	ZN(LH)	0.0010	0.6006
A2	!A1&B1&!B2&C1&!C2	0.0100	ZN(LH)	0.0010	0.5116
A2	!A1&B1&!B2&C1&C2	0.0100	ZN(LH)	0.0010	0.5113
A2	!A1&B1&B2&!C1&C2	0.0100	ZN(LH)	0.0010	0.5987
A2	!A1&B1&B2&C1&!C2	0.0100	ZN(LH)	0.0010	0.5095
A2	!A1&B1&B2&C1&C2	0.0100	ZN(LH)	0.0010	0.5092
B1	!A1&A2&!B2&!C1&C2	0.0100	ZN(LH)	0.0010	0.8820
B1	!A1&A2&!B2&C1&!C2	0.0100	ZN(LH)	0.0010	0.7932
B1	!A1&A2&!B2&C1&C2	0.0100	ZN(LH)	0.0010	0.7898
B1	A1&!A2&!B2&!C1&C2	0.0100	ZN(LH)	0.0010	0.7929
B1	A1&!A2&!B2&C1&!C2	0.0100	ZN(LH)	0.0010	0.7037
B1	A1&!A2&!B2&C1&C2	0.0100	ZN(LH)	0.0010	0.7004
B1	A1&A2&!B2&!C1&C2	0.0100	ZN(LH)	0.0010	0.8654
B1	A1&A2&!B2&C1&!C2	0.0100	ZN(LH)	0.0010	0.7760
B1	A1&A2&!B2&C1&C2	0.0100	ZN(LH)	0.0010	0.7727
C1	!A1&A2&!B1&B2&!C2	0.0100	ZN(HL)	0.0010	0.2583
C1	!A1&A2&B1&!B2&!C2	0.0100	ZN(HL)	0.0010	0.1812

continues on next page

Table 242 – continued from previous page

C1	!A1&A2&B1&B2&!C2	0.0100	ZN(HL)	0.0010	0.1809
C1	A1&!A2&!B1&B2&!C2	0.0100	ZN(HL)	0.0010	0.1813
C1	A1&!A2&B1&!B2&!C2	0.0100	ZN(HL)	0.0010	0.1039
C1	A1&!A2&B1&B2&!C2	0.0100	ZN(HL)	0.0010	0.1040
C1	A1&A2&!B1&B2&!C2	0.0100	ZN(HL)	0.0010	0.1813
C1	A1&A2&B1&!B2&!C2	0.0100	ZN(HL)	0.0010	0.1039
C1	A1&A2&B1&B2&!C2	0.0100	ZN(HL)	0.0010	0.1040
A2	!A1&!B1&B2&!C1&C2	0.0100	ZN(HL)	0.0010	0.3227
A2	!A1&!B1&B2&C1&!C2	0.0100	ZN(HL)	0.0010	0.2472
A2	!A1&!B1&B2&C1&C2	0.0100	ZN(HL)	0.0010	0.2474
A2	!A1&B1&!B2&!C1&C2	0.0100	ZN(HL)	0.0010	0.2460
A2	!A1&B1&!B2&C1&!C2	0.0100	ZN(HL)	0.0010	0.1710
A2	!A1&B1&!B2&C1&C2	0.0100	ZN(HL)	0.0010	0.1710
A2	!A1&B1&B2&!C1&C2	0.0100	ZN(HL)	0.0010	0.2463
A2	!A1&B1&B2&C1&!C2	0.0100	ZN(HL)	0.0010	0.1708
A2	!A1&B1&B2&C1&C2	0.0100	ZN(HL)	0.0010	0.1706
C2	!A1&A2&!B1&B2&!C1	0.0100	ZN(HL)	0.0010	0.3217
C2	!A1&A2&B1&!B2&!C1	0.0100	ZN(HL)	0.0010	0.2451
C2	!A1&A2&B1&B2&!C1	0.0100	ZN(HL)	0.0010	0.2452
C2	A1&!A2&!B1&B2&!C1	0.0100	ZN(HL)	0.0010	0.2451
C2	A1&!A2&B1&!B2&!C1	0.0100	ZN(HL)	0.0010	0.1689
C2	A1&!A2&B1&B2&!C1	0.0100	ZN(HL)	0.0010	0.1685
C2	A1&A2&!B1&B2&!C1	0.0100	ZN(HL)	0.0010	0.2450
C2	A1&A2&B1&!B2&!C1	0.0100	ZN(HL)	0.0010	0.1687
C2	A1&A2&B1&B2&!C1	0.0100	ZN(HL)	0.0010	0.1685
C1	!A1&A2&!B1&B2&!C2	0.0100	ZN(LH)	0.0010	1.1140
C1	!A1&A2&B1&!B2&!C2	0.0100	ZN(LH)	0.0010	1.0250
C1	!A1&A2&B1&B2&!C2	0.0100	ZN(LH)	0.0010	1.0949
C1	A1&!A2&!B1&B2&!C2	0.0100	ZN(LH)	0.0010	1.0243
C1	A1&!A2&B1&!B2&!C2	0.0100	ZN(LH)	0.0010	0.9357
C1	A1&!A2&B1&B2&!C2	0.0100	ZN(LH)	0.0010	1.0056
C1	A1&A2&!B1&B2&!C2	0.0100	ZN(LH)	0.0010	1.0951
C1	A1&A2&B1&!B2&!C2	0.0100	ZN(LH)	0.0010	1.0063
C1	A1&A2&B1&B2&!C2	0.0100	ZN(LH)	0.0010	1.0769
C2	!A1&A2&!B1&B2&!C1	0.0100	ZN(LH)	0.0010	1.2033
C2	!A1&A2&B1&!B2&!C1	0.0100	ZN(LH)	0.0010	1.1144
C2	!A1&A2&B1&B2&!C1	0.0100	ZN(LH)	0.0010	1.1843
C2	A1&!A2&!B1&B2&!C1	0.0100	ZN(LH)	0.0010	1.1138
C2	A1&!A2&B1&!B2&!C1	0.0100	ZN(LH)	0.0010	1.0254
C2	A1&!A2&B1&B2&!C1	0.0100	ZN(LH)	0.0010	1.0951
C2	A1&A2&!B1&B2&!C1	0.0100	ZN(LH)	0.0010	1.1848
C2	A1&A2&B1&!B2&!C1	0.0100	ZN(LH)	0.0010	1.0961
C2	A1&A2&B1&B2&!C1	0.0100	ZN(LH)	0.0010	1.1657
A1	!A2&!B1&B2&!C1&C2	0.0100	ZN(HL)	0.0010	0.2577
A1	!A2&!B1&B2&C1&!C2	0.0100	ZN(HL)	0.0010	0.1817
A1	!A2&!B1&B2&C1&C2	0.0100	ZN(HL)	0.0010	0.1819
A1	!A2&B1&!B2&!C1&C2	0.0100	ZN(HL)	0.0010	0.1807
A1	!A2&B1&!B2&C1&!C2	0.0100	ZN(HL)	0.0010	0.1047
A1	!A2&B1&!B2&C1&C2	0.0100	ZN(HL)	0.0010	0.1044
A1	!A2&B1&B2&!C1&C2	0.0100	ZN(HL)	0.0010	0.1807
A1	!A2&B1&B2&C1&!C2	0.0100	ZN(HL)	0.0010	0.1045
A1	!A2&B1&B2&C1&C2	0.0100	ZN(HL)	0.0010	0.1043

continues on next page

Table 242 – continued from previous page

B2	!A1&A2&!B1&!C1&C2	0.0100	ZN(HL)	0.0010	0.3213
B2	!A1&A2&!B1&C1&!C2	0.0100	ZN(HL)	0.0010	0.2461
B2	!A1&A2&!B1&C1&C2	0.0100	ZN(HL)	0.0010	0.2461
B2	A1&!A2&!B1&!C1&C2	0.0100	ZN(HL)	0.0010	0.2449
B2	A1&!A2&!B1&C1&!C2	0.0100	ZN(HL)	0.0010	0.1700
B2	A1&!A2&!B1&C1&C2	0.0100	ZN(HL)	0.0010	0.1698
B2	A1&A2&!B1&!C1&C2	0.0100	ZN(HL)	0.0010	0.2449
B2	A1&A2&!B1&C1&!C2	0.0100	ZN(HL)	0.0010	0.1699
B2	A1&A2&!B1&C1&C2	0.0100	ZN(HL)	0.0010	0.1697
B2(LH)	!A1&!A2&!B1&!C1&!C2	0.0100	n/a	n/a	-0.1189
B2(LH)	!A1&!A2&!B1&!C1&C2	0.0100	n/a	n/a	-0.1189
B2(LH)	!A1&!A2&!B1&C1&!C2	0.0100	n/a	n/a	-0.1189
B2(LH)	!A1&!A2&!B1&C1&C2	0.0100	n/a	n/a	-0.1190
B2(LH)	!A1&!A2&B1&!C1&!C2	0.0100	n/a	n/a	-0.1155
B2(LH)	!A1&!A2&B1&!C1&C2	0.0100	n/a	n/a	-0.1155
B2(LH)	!A1&!A2&B1&C1&!C2	0.0100	n/a	n/a	-0.1155
B2(LH)	!A1&!A2&B1&C1&C2	0.0100	n/a	n/a	-0.1154
B2(LH)	!A1&A2&!B1&!C1&!C2	0.0100	n/a	n/a	0.0133
B2(LH)	!A1&A2&B1&!C1&!C2	0.0100	n/a	n/a	-0.1155
B2(LH)	A1&!A2&!B1&!C1&!C2	0.0100	n/a	n/a	0.0133
B2(LH)	A1&!A2&B1&!C1&!C2	0.0100	n/a	n/a	-0.1155
B2(LH)	A1&A2&!B1&!C1&!C2	0.0100	n/a	n/a	0.0134
B2(LH)	A1&A2&B1&!C1&!C2	0.0100	n/a	n/a	-0.1155
B2(LH)	!A1&A2&B1&!C1&C2	0.0100	n/a	n/a	-0.0996
B2(LH)	!A1&A2&B1&C1&!C2	0.0100	n/a	n/a	-0.0996
B2(LH)	!A1&A2&B1&C1&C2	0.0100	n/a	n/a	-0.0995
B2(LH)	A1&!A2&B1&!C1&C2	0.0100	n/a	n/a	-0.0996
B2(LH)	A1&!A2&B1&C1&!C2	0.0100	n/a	n/a	-0.0996
B2(LH)	A1&!A2&B1&C1&C2	0.0100	n/a	n/a	-0.0995
B2(LH)	A1&A2&B1&!C1&C2	0.0100	n/a	n/a	-0.0996
B2(LH)	A1&A2&B1&C1&!C2	0.0100	n/a	n/a	-0.0996
B2(LH)	A1&A2&B1&C1&C2	0.0100	n/a	n/a	-0.0995
C2(HL)	!A1&!A2&!B1&!B2&!C1	0.0100	n/a	n/a	0.1196
C2(HL)	!A1&!A2&!B1&!B2&C1	0.0100	n/a	n/a	0.1192
C2(HL)	!A1&!A2&!B1&B2&!C1	0.0100	n/a	n/a	0.1202
C2(HL)	!A1&!A2&!B1&B2&C1	0.0100	n/a	n/a	0.1192
C2(HL)	!A1&!A2&B1&!B2&!C1	0.0100	n/a	n/a	0.1202
C2(HL)	!A1&!A2&B1&!B2&C1	0.0100	n/a	n/a	0.1192
C2(HL)	!A1&!A2&B1&B2&!C1	0.0100	n/a	n/a	0.1200
C2(HL)	!A1&!A2&B1&B2&C1	0.0100	n/a	n/a	0.1192
C2(HL)	!A1&A2&!B1&!B2&!C1	0.0100	n/a	n/a	0.1225
C2(HL)	!A1&A2&!B1&!B2&C1	0.0100	n/a	n/a	0.1192
C2(HL)	A1&!A2&!B1&!B2&!C1	0.0100	n/a	n/a	0.1225
C2(HL)	A1&!A2&!B1&!B2&C1	0.0100	n/a	n/a	0.1192
C2(HL)	A1&A2&!B1&!B2&!C1	0.0100	n/a	n/a	0.1224
C2(HL)	A1&A2&!B1&!B2&C1	0.0100	n/a	n/a	0.1192
C2(HL)	!A1&A2&!B1&B2&C1	0.0100	n/a	n/a	0.1192
C2(HL)	!A1&A2&B1&!B2&C1	0.0100	n/a	n/a	0.1192
C2(HL)	!A1&A2&B1&B2&C1	0.0100	n/a	n/a	0.1192
C2(HL)	A1&!A2&!B1&B2&C1	0.0100	n/a	n/a	0.1192
C2(HL)	A1&!A2&B1&!B2&C1	0.0100	n/a	n/a	0.1192
C2(HL)	A1&!A2&B1&B2&C1	0.0100	n/a	n/a	0.1192

continues on next page

Table 242 – continued from previous page

C2(HL)	A1&A2&!B1&B2&C1	0.0100	n/a	n/a	0.1192
C2(HL)	A1&A2&B1&!B2&C1	0.0100	n/a	n/a	0.1192
C2(HL)	A1&A2&B1&B2&C1	0.0100	n/a	n/a	0.1192
B2(HL)	!A1&!A2&!B1&!C1&!C2	0.0100	n/a	n/a	0.1585
B2(HL)	!A1&!A2&!B1&!C1&C2	0.0100	n/a	n/a	0.1420
B2(HL)	!A1&!A2&!B1&C1&!C2	0.0100	n/a	n/a	0.1421
B2(HL)	!A1&!A2&!B1&C1&C2	0.0100	n/a	n/a	0.1392
B2(HL)	!A1&!A2&B1&!C1&!C2	0.0100	n/a	n/a	0.1626
B2(HL)	!A1&!A2&B1&!C1&C2	0.0100	n/a	n/a	0.1194
B2(HL)	!A1&!A2&B1&C1&!C2	0.0100	n/a	n/a	0.1194
B2(HL)	!A1&!A2&B1&C1&C2	0.0100	n/a	n/a	0.1192
B2(HL)	!A1&A2&!B1&!C1&!C2	0.0100	n/a	n/a	0.1259
B2(HL)	!A1&A2&B1&!C1&!C2	0.0100	n/a	n/a	0.1298
B2(HL)	A1&!A2&!B1&!C1&!C2	0.0100	n/a	n/a	0.1259
B2(HL)	A1&!A2&B1&!C1&!C2	0.0100	n/a	n/a	0.1298
B2(HL)	A1&A2&!B1&!C1&!C2	0.0100	n/a	n/a	0.1257
B2(HL)	A1&A2&B1&!C1&!C2	0.0100	n/a	n/a	0.1295
B2(HL)	!A1&A2&B1&!C1&C2	0.0100	n/a	n/a	0.1192
B2(HL)	!A1&A2&B1&C1&!C2	0.0100	n/a	n/a	0.1192
B2(HL)	!A1&A2&B1&C1&C2	0.0100	n/a	n/a	0.1192
B2(HL)	A1&!A2&B1&!C1&C2	0.0100	n/a	n/a	0.1192
B2(HL)	A1&!A2&B1&C1&!C2	0.0100	n/a	n/a	0.1192
B2(HL)	A1&!A2&B1&C1&C2	0.0100	n/a	n/a	0.1192
B2(HL)	A1&A2&B1&!C1&C2	0.0100	n/a	n/a	0.1192
B2(HL)	A1&A2&B1&C1&!C2	0.0100	n/a	n/a	0.1192
B2(HL)	A1&A2&B1&C1&C2	0.0100	n/a	n/a	0.1192
C2(LH)	!A1&!A2&!B1&!B2&!C1	0.0100	n/a	n/a	-0.1190
C2(LH)	!A1&!A2&!B1&!B2&C1	0.0100	n/a	n/a	-0.1154
C2(LH)	!A1&!A2&!B1&B2&!C1	0.0100	n/a	n/a	-0.1190
C2(LH)	!A1&!A2&!B1&B2&C1	0.0100	n/a	n/a	-0.1154
C2(LH)	!A1&!A2&B1&!B2&!C1	0.0100	n/a	n/a	-0.1189
C2(LH)	!A1&!A2&B1&!B2&C1	0.0100	n/a	n/a	-0.1154
C2(LH)	!A1&!A2&B1&B2&!C1	0.0100	n/a	n/a	-0.1189
C2(LH)	!A1&!A2&B1&B2&C1	0.0100	n/a	n/a	-0.1154
C2(LH)	!A1&A2&!B1&!B2&!C1	0.0100	n/a	n/a	-0.1190
C2(LH)	!A1&A2&!B1&!B2&C1	0.0100	n/a	n/a	-0.1154
C2(LH)	A1&!A2&!B1&!B2&!C1	0.0100	n/a	n/a	-0.1190
C2(LH)	A1&!A2&!B1&!B2&C1	0.0100	n/a	n/a	-0.1154
C2(LH)	A1&A2&!B1&!B2&!C1	0.0100	n/a	n/a	-0.1190
C2(LH)	A1&A2&!B1&!B2&C1	0.0100	n/a	n/a	-0.1154
C2(LH)	!A1&A2&!B1&B2&C1	0.0100	n/a	n/a	-0.0995
C2(LH)	!A1&A2&B1&!B2&C1	0.0100	n/a	n/a	-0.0995
C2(LH)	!A1&A2&B1&B2&C1	0.0100	n/a	n/a	-0.0995
C2(LH)	A1&!A2&!B1&B2&C1	0.0100	n/a	n/a	-0.0995
C2(LH)	A1&!A2&B1&!B2&C1	0.0100	n/a	n/a	-0.0995
C2(LH)	A1&!A2&B1&B2&C1	0.0100	n/a	n/a	-0.0995
C2(LH)	A1&A2&!B1&B2&C1	0.0100	n/a	n/a	-0.0995
C2(LH)	A1&A2&B1&!B2&C1	0.0100	n/a	n/a	-0.0995
C2(LH)	A1&A2&B1&B2&C1	0.0100	n/a	n/a	-0.0995
A2(LH)	!A1&!B1&!B2&!C1&!C2	0.0100	n/a	n/a	0.0611
A2(LH)	!A1&!B1&!B2&!C1&C2	0.0100	n/a	n/a	0.0612
A2(LH)	!A1&!B1&!B2&C1&!C2	0.0100	n/a	n/a	0.0612

continues on next page

Table 242 – continued from previous page

A2(LH)	!A1&!B1&!B2&C1&C2	0.0100	n/a	n/a	0.0612
A2(LH)	!A1&!B1&B2&!C1&!C2	0.0100	n/a	n/a	0.3041
A2(LH)	!A1&B1&!B2&!C1&!C2	0.0100	n/a	n/a	0.3041
A2(LH)	!A1&B1&B2&!C1&!C2	0.0100	n/a	n/a	0.3716
A2(LH)	A1&!B1&!B2&!C1&!C2	0.0100	n/a	n/a	-0.1299
A2(LH)	A1&!B1&!B2&!C1&C2	0.0100	n/a	n/a	-0.1299
A2(LH)	A1&!B1&!B2&C1&!C2	0.0100	n/a	n/a	-0.1299
A2(LH)	A1&!B1&!B2&C1&C2	0.0100	n/a	n/a	-0.1299
A2(LH)	A1&!B1&B2&!C1&!C2	0.0100	n/a	n/a	-0.1299
A2(LH)	A1&B1&!B2&!C1&!C2	0.0100	n/a	n/a	-0.1299
A2(LH)	A1&B1&B2&!C1&!C2	0.0100	n/a	n/a	-0.1299
A2(LH)	A1&!B1&B2&!C1&C2	0.0100	n/a	n/a	-0.0994
A2(LH)	A1&!B1&B2&C1&!C2	0.0100	n/a	n/a	-0.0994
A2(LH)	A1&!B1&B2&C1&C2	0.0100	n/a	n/a	-0.0994
A2(LH)	A1&B1&!B2&!C1&C2	0.0100	n/a	n/a	-0.0994
A2(LH)	A1&B1&!B2&C1&!C2	0.0100	n/a	n/a	-0.0994
A2(LH)	A1&B1&!B2&C1&C2	0.0100	n/a	n/a	-0.0994
A2(LH)	A1&B1&B2&!C1&C2	0.0100	n/a	n/a	-0.0994
A2(LH)	A1&B1&B2&C1&!C2	0.0100	n/a	n/a	-0.0994
A2(LH)	A1&B1&B2&C1&C2	0.0100	n/a	n/a	-0.0994
A1(LH)	!A2&!B1&!B2&!C1&!C2	0.0100	n/a	n/a	0.0603
A1(LH)	!A2&!B1&!B2&!C1&C2	0.0100	n/a	n/a	0.0603
A1(LH)	!A2&!B1&!B2&C1&!C2	0.0100	n/a	n/a	0.0603
A1(LH)	!A2&!B1&!B2&C1&C2	0.0100	n/a	n/a	0.0603
A1(LH)	!A2&!B1&B2&!C1&!C2	0.0100	n/a	n/a	0.3029
A1(LH)	!A2&B1&!B2&!C1&!C2	0.0100	n/a	n/a	0.3029
A1(LH)	!A2&B1&B2&!C1&!C2	0.0100	n/a	n/a	0.3706
A1(LH)	A2&!B1&!B2&!C1&!C2	0.0100	n/a	n/a	-0.1312
A1(LH)	A2&!B1&!B2&!C1&C2	0.0100	n/a	n/a	-0.1309
A1(LH)	A2&!B1&!B2&C1&!C2	0.0100	n/a	n/a	-0.1309
A1(LH)	A2&!B1&!B2&C1&C2	0.0100	n/a	n/a	-0.1309
A1(LH)	A2&!B1&B2&!C1&!C2	0.0100	n/a	n/a	-0.1309
A1(LH)	A2&B1&!B2&!C1&!C2	0.0100	n/a	n/a	-0.1309
A1(LH)	A2&B1&B2&!C1&!C2	0.0100	n/a	n/a	-0.1309
A1(LH)	A2&!B1&B2&!C1&C2	0.0100	n/a	n/a	-0.0338
A1(LH)	A2&!B1&B2&C1&!C2	0.0100	n/a	n/a	-0.0338
A1(LH)	A2&!B1&B2&C1&C2	0.0100	n/a	n/a	-0.0338
A1(LH)	A2&B1&!B2&!C1&C2	0.0100	n/a	n/a	-0.0338
A1(LH)	A2&B1&!B2&C1&!C2	0.0100	n/a	n/a	-0.0338
A1(LH)	A2&B1&!B2&C1&C2	0.0100	n/a	n/a	-0.0338
A1(LH)	A2&B1&B2&!C1&C2	0.0100	n/a	n/a	-0.0338
A1(LH)	A2&B1&B2&C1&!C2	0.0100	n/a	n/a	-0.0338
A1(LH)	A2&B1&B2&C1&C2	0.0100	n/a	n/a	-0.0338
C1(LH)	!A1&!A2&!B1&!B2&!C2	0.0100	n/a	n/a	-0.1198
C1(LH)	!A1&!A2&!B1&!B2&C2	0.0100	n/a	n/a	-0.1167
C1(LH)	!A1&!A2&!B1&B2&!C2	0.0100	n/a	n/a	-0.1198
C1(LH)	!A1&!A2&!B1&B2&C2	0.0100	n/a	n/a	-0.1165
C1(LH)	!A1&!A2&B1&!B2&!C2	0.0100	n/a	n/a	-0.1198
C1(LH)	!A1&!A2&B1&!B2&C2	0.0100	n/a	n/a	-0.1165
C1(LH)	!A1&!A2&B1&B2&!C2	0.0100	n/a	n/a	-0.1198
C1(LH)	!A1&!A2&B1&B2&C2	0.0100	n/a	n/a	-0.1165
C1(LH)	!A1&A2&!B1&!B2&!C2	0.0100	n/a	n/a	-0.1198

continues on next page

Table 242 – continued from previous page

C1(LH)	!A1&A2&!B1&!B2&C2	0.0100	n/a	n/a	-0.1165
C1(LH)	A1&!A2&!B1&!B2&!C2	0.0100	n/a	n/a	-0.1198
C1(LH)	A1&!A2&!B1&!B2&C2	0.0100	n/a	n/a	-0.1165
C1(LH)	A1&A2&!B1&!B2&!C2	0.0100	n/a	n/a	-0.1198
C1(LH)	A1&A2&!B1&!B2&C2	0.0100	n/a	n/a	-0.1165
C1(LH)	!A1&A2&!B1&B2&C2	0.0100	n/a	n/a	-0.0338
C1(LH)	!A1&A2&B1&!B2&C2	0.0100	n/a	n/a	-0.0338
C1(LH)	!A1&A2&B1&B2&C2	0.0100	n/a	n/a	-0.0339
C1(LH)	A1&!A2&!B1&B2&C2	0.0100	n/a	n/a	-0.0338
C1(LH)	A1&!A2&B1&!B2&C2	0.0100	n/a	n/a	-0.0339
C1(LH)	A1&!A2&B1&B2&C2	0.0100	n/a	n/a	-0.0338
C1(LH)	A1&A2&!B1&B2&C2	0.0100	n/a	n/a	-0.0338
C1(LH)	A1&A2&B1&!B2&C2	0.0100	n/a	n/a	-0.0338
C1(LH)	A1&A2&B1&B2&C2	0.0100	n/a	n/a	-0.0338
A2(HL)	!A1&!B1&!B2&!C1&!C2	0.0100	n/a	n/a	0.1340
A2(HL)	!A1&!B1&!B2&!C1&C2	0.0100	n/a	n/a	0.1340
A2(HL)	!A1&!B1&!B2&C1&!C2	0.0100	n/a	n/a	0.1339
A2(HL)	!A1&!B1&!B2&C1&C2	0.0100	n/a	n/a	0.1339
A2(HL)	!A1&!B1&B2&!C1&!C2	0.0100	n/a	n/a	0.1339
A2(HL)	!A1&B1&!B2&!C1&!C2	0.0100	n/a	n/a	0.1339
A2(HL)	!A1&B1&B2&!C1&!C2	0.0100	n/a	n/a	0.1339
A2(HL)	A1&!B1&!B2&!C1&!C2	0.0100	n/a	n/a	0.1382
A2(HL)	A1&!B1&!B2&!C1&C2	0.0100	n/a	n/a	0.1382
A2(HL)	A1&!B1&!B2&C1&!C2	0.0100	n/a	n/a	0.1382
A2(HL)	A1&!B1&!B2&C1&C2	0.0100	n/a	n/a	0.1382
A2(HL)	A1&!B1&B2&!C1&!C2	0.0100	n/a	n/a	0.1383
A2(HL)	A1&B1&!B2&!C1&!C2	0.0100	n/a	n/a	0.1383
A2(HL)	A1&B1&B2&!C1&!C2	0.0100	n/a	n/a	0.1377
A2(HL)	A1&!B1&B2&!C1&C2	0.0100	n/a	n/a	0.1191
A2(HL)	A1&!B1&B2&C1&!C2	0.0100	n/a	n/a	0.1191
A2(HL)	A1&!B1&B2&C1&C2	0.0100	n/a	n/a	0.1191
A2(HL)	A1&B1&!B2&!C1&C2	0.0100	n/a	n/a	0.1191
A2(HL)	A1&B1&!B2&C1&!C2	0.0100	n/a	n/a	0.1191
A2(HL)	A1&B1&!B2&C1&C2	0.0100	n/a	n/a	0.1191
A2(HL)	A1&B1&B2&!C1&C2	0.0100	n/a	n/a	0.1192
A2(HL)	A1&B1&B2&C1&!C2	0.0100	n/a	n/a	0.1192
A2(HL)	A1&B1&B2&C1&C2	0.0100	n/a	n/a	0.1192
B1(HL)	!A1&!A2&!B2&!C1&!C2	0.0100	n/a	n/a	0.1588
B1(HL)	!A1&!A2&!B2&!C1&C2	0.0100	n/a	n/a	0.1423
B1(HL)	!A1&!A2&!B2&C1&!C2	0.0100	n/a	n/a	0.1424
B1(HL)	!A1&!A2&!B2&C1&C2	0.0100	n/a	n/a	0.1396
B1(HL)	!A1&!A2&B2&!C1&!C2	0.0100	n/a	n/a	0.1622
B1(HL)	!A1&!A2&B2&!C1&C2	0.0100	n/a	n/a	0.1196
B1(HL)	!A1&!A2&B2&C1&!C2	0.0100	n/a	n/a	0.1196
B1(HL)	!A1&!A2&B2&C1&C2	0.0100	n/a	n/a	0.1195
B1(HL)	!A1&A2&!B2&!C1&!C2	0.0100	n/a	n/a	0.1263
B1(HL)	!A1&A2&B2&!C1&!C2	0.0100	n/a	n/a	0.1302
B1(HL)	A1&!A2&!B2&!C1&!C2	0.0100	n/a	n/a	0.1263
B1(HL)	A1&!A2&B2&!C1&!C2	0.0100	n/a	n/a	0.1302
B1(HL)	A1&A2&!B2&!C1&!C2	0.0100	n/a	n/a	0.1261
B1(HL)	A1&A2&B2&!C1&!C2	0.0100	n/a	n/a	0.1299
B1(HL)	!A1&A2&B2&!C1&C2	0.0100	n/a	n/a	0.0819

continues on next page

Table 242 – continued from previous page

B1(HL)	!A1&A2&B2&C1&!C2	0.0100	n/a	n/a	0.0819
B1(HL)	!A1&A2&B2&C1&C2	0.0100	n/a	n/a	0.0819
B1(HL)	A1&!A2&B2&!C1&C2	0.0100	n/a	n/a	0.0820
B1(HL)	A1&!A2&B2&C1&!C2	0.0100	n/a	n/a	0.0819
B1(HL)	A1&!A2&B2&C1&C2	0.0100	n/a	n/a	0.0819
B1(HL)	A1&A2&B2&!C1&C2	0.0100	n/a	n/a	0.0819
B1(HL)	A1&A2&B2&C1&!C2	0.0100	n/a	n/a	0.0819
B1(HL)	A1&A2&B2&C1&C2	0.0100	n/a	n/a	0.0819
C1(HL)	!A1&!A2&!B1&!B2&!C2	0.0100	n/a	n/a	0.1200
C1(HL)	!A1&!A2&!B1&!B2&C2	0.0100	n/a	n/a	0.1196
C1(HL)	!A1&!A2&!B1&B2&!C2	0.0100	n/a	n/a	0.1205
C1(HL)	!A1&!A2&!B1&B2&C2	0.0100	n/a	n/a	0.1196
C1(HL)	!A1&!A2&B1&!B2&!C2	0.0100	n/a	n/a	0.1206
C1(HL)	!A1&!A2&B1&!B2&C2	0.0100	n/a	n/a	0.1196
C1(HL)	!A1&!A2&B1&B2&!C2	0.0100	n/a	n/a	0.1203
C1(HL)	!A1&!A2&B1&B2&C2	0.0100	n/a	n/a	0.1196
C1(HL)	!A1&A2&!B1&!B2&!C2	0.0100	n/a	n/a	0.1228
C1(HL)	!A1&A2&!B1&!B2&C2	0.0100	n/a	n/a	0.1196
C1(HL)	A1&!A2&!B1&!B2&!C2	0.0100	n/a	n/a	0.1228
C1(HL)	A1&!A2&!B1&!B2&C2	0.0100	n/a	n/a	0.1196
C1(HL)	A1&A2&!B1&!B2&!C2	0.0100	n/a	n/a	0.1227
C1(HL)	A1&A2&!B1&!B2&C2	0.0100	n/a	n/a	0.1196
C1(HL)	!A1&A2&!B1&B2&C2	0.0100	n/a	n/a	0.0805
C1(HL)	!A1&A2&B1&!B2&C2	0.0100	n/a	n/a	0.0805
C1(HL)	!A1&A2&B1&B2&C2	0.0100	n/a	n/a	0.0806
C1(HL)	A1&!A2&!B1&B2&C2	0.0100	n/a	n/a	0.0805
C1(HL)	A1&!A2&B1&!B2&C2	0.0100	n/a	n/a	0.0805
C1(HL)	A1&!A2&B1&B2&C2	0.0100	n/a	n/a	0.0806
C1(HL)	A1&A2&!B1&B2&C2	0.0100	n/a	n/a	0.0805
C1(HL)	A1&A2&B1&!B2&C2	0.0100	n/a	n/a	0.0805
C1(HL)	A1&A2&B1&B2&C2	0.0100	n/a	n/a	0.0806
A1(HL)	!A2&!B1&!B2&!C1&!C2	0.0100	n/a	n/a	0.1344
A1(HL)	!A2&!B1&!B2&!C1&C2	0.0100	n/a	n/a	0.1344
A1(HL)	!A2&!B1&!B2&C1&!C2	0.0100	n/a	n/a	0.1344
A1(HL)	!A2&!B1&!B2&C1&C2	0.0100	n/a	n/a	0.1344
A1(HL)	!A2&!B1&B2&!C1&!C2	0.0100	n/a	n/a	0.1344
A1(HL)	!A2&B1&!B2&!C1&!C2	0.0100	n/a	n/a	0.1344
A1(HL)	!A2&B1&B2&!C1&!C2	0.0100	n/a	n/a	0.1344
A1(HL)	A2&!B1&!B2&!C1&!C2	0.0100	n/a	n/a	0.1384
A1(HL)	A2&!B1&!B2&!C1&C2	0.0100	n/a	n/a	0.1384
A1(HL)	A2&!B1&!B2&C1&!C2	0.0100	n/a	n/a	0.1383
A1(HL)	A2&!B1&!B2&C1&C2	0.0100	n/a	n/a	0.1383
A1(HL)	A2&!B1&B2&!C1&!C2	0.0100	n/a	n/a	0.1385
A1(HL)	A2&B1&!B2&!C1&!C2	0.0100	n/a	n/a	0.1385
A1(HL)	A2&B1&B2&!C1&!C2	0.0100	n/a	n/a	0.1378
A1(HL)	A2&!B1&B2&!C1&C2	0.0100	n/a	n/a	0.0818
A1(HL)	A2&!B1&B2&C1&!C2	0.0100	n/a	n/a	0.0818
A1(HL)	A2&!B1&B2&C1&C2	0.0100	n/a	n/a	0.0818
A1(HL)	A2&B1&!B2&!C1&C2	0.0100	n/a	n/a	0.0818
A1(HL)	A2&B1&!B2&C1&!C2	0.0100	n/a	n/a	0.0818
A1(HL)	A2&B1&!B2&C1&C2	0.0100	n/a	n/a	0.0818
A1(HL)	A2&B1&B2&!C1&C2	0.0100	n/a	n/a	0.0818

continues on next page

Table 242 – continued from previous page

A1(HL)	A2&B1&B2&C1&!C2	0.0100	n/a	n/a	0.0818
A1(HL)	A2&B1&B2&C1&C2	0.0100	n/a	n/a	0.0818
B1(LH)	!A1&!A2&!B2&!C1&!C2	0.0100	n/a	n/a	-0.1199
B1(LH)	!A1&!A2&!B2&!C1&C2	0.0100	n/a	n/a	-0.1198
B1(LH)	!A1&!A2&!B2&C1&!C2	0.0100	n/a	n/a	-0.1198
B1(LH)	!A1&!A2&!B2&C1&C2	0.0100	n/a	n/a	-0.1199
B1(LH)	!A1&!A2&B2&!C1&!C2	0.0100	n/a	n/a	-0.1168
B1(LH)	!A1&!A2&B2&!C1&C2	0.0100	n/a	n/a	-0.1165
B1(LH)	!A1&!A2&B2&C1&!C2	0.0100	n/a	n/a	-0.1165
B1(LH)	!A1&!A2&B2&C1&C2	0.0100	n/a	n/a	-0.1165
B1(LH)	!A1&A2&!B2&!C1&!C2	0.0100	n/a	n/a	0.0126
B1(LH)	!A1&A2&B2&!C1&!C2	0.0100	n/a	n/a	-0.1165
B1(LH)	A1&!A2&!B2&!C1&!C2	0.0100	n/a	n/a	0.0125
B1(LH)	A1&!A2&B2&!C1&!C2	0.0100	n/a	n/a	-0.1165
B1(LH)	A1&A2&!B2&!C1&!C2	0.0100	n/a	n/a	0.0127
B1(LH)	A1&A2&B2&!C1&!C2	0.0100	n/a	n/a	-0.1165
B1(LH)	!A1&A2&B2&!C1&C2	0.0100	n/a	n/a	-0.0340
B1(LH)	!A1&A2&B2&C1&!C2	0.0100	n/a	n/a	-0.0340
B1(LH)	!A1&A2&B2&C1&C2	0.0100	n/a	n/a	-0.0340
B1(LH)	A1&!A2&B2&!C1&C2	0.0100	n/a	n/a	-0.0340
B1(LH)	A1&!A2&B2&C1&!C2	0.0100	n/a	n/a	-0.0340
B1(LH)	A1&!A2&B2&C1&C2	0.0100	n/a	n/a	-0.0340
B1(LH)	A1&A2&B2&!C1&C2	0.0100	n/a	n/a	-0.0340
B1(LH)	A1&A2&B2&C1&!C2	0.0100	n/a	n/a	-0.0340
B1(LH)	A1&A2&B2&C1&C2	0.0100	n/a	n/a	-0.0339

LEAKAGE POWER

When Condition	Power (nW)
!A1&!A2&!B1&!B2&!C1&!C2	0.1510
!A1&!A2&!B1&!B2&!C1&C2	0.1510
!A1&!A2&!B1&!B2&C1&!C2	0.1510
!A1&!A2&!B1&!B2&C1&C2	0.1510
!A1&!A2&!B1&B2&!C1&!C2	0.1513
!A1&!A2&!B1&B2&!C1&C2	0.1523
!A1&!A2&!B1&B2&C1&!C2	0.1523
!A1&!A2&!B1&B2&C1&C2	0.1523
!A1&!A2&B1&!B2&!C1&!C2	0.1513
!A1&!A2&B1&!B2&!C1&C2	0.1523
!A1&!A2&B1&!B2&C1&!C2	0.1523
!A1&!A2&B1&!B2&C1&C2	0.1523
!A1&!A2&B1&B2&!C1&!C2	0.1513
!A1&!A2&B1&B2&!C1&C2	0.1523
!A1&!A2&B1&B2&C1&!C2	0.1523
!A1&!A2&B1&B2&C1&C2	0.1523
!A1&A2&!B1&!B2&!C1&!C2	0.3096
!A1&A2&!B1&!B2&!C1&C2	0.3105

continues on next page

Table 243 – continued from previous page

!A1&A2&!B1&!B2&C1&!C2	0.3105
!A1&A2&!B1&!B2&C1&C2	0.3105
!A1&A2&!B1&B2&!C1&!C2	0.4658
!A1&A2&B1&!B2&!C1&!C2	0.4658
!A1&A2&B1&B2&!C1&!C2	0.4664
A1&!A2&!B1&!B2&!C1&!C2	0.3096
A1&!A2&!B1&!B2&!C1&C2	0.3105
A1&!A2&!B1&!B2&C1&!C2	0.3105
A1&!A2&!B1&!B2&C1&C2	0.3105
A1&!A2&!B1&B2&!C1&!C2	0.4658
A1&!A2&B1&!B2&!C1&!C2	0.4658
A1&!A2&B1&B2&!C1&!C2	0.4664
A1&A2&!B1&!B2&!C1&!C2	0.3103
A1&A2&!B1&!B2&!C1&C2	0.3113
A1&A2&!B1&!B2&C1&!C2	0.3113
A1&A2&!B1&!B2&C1&C2	0.3113
A1&A2&!B1&B2&!C1&!C2	0.4667
A1&A2&B1&!B2&!C1&!C2	0.4667
A1&A2&B1&B2&!C1&!C2	0.4674
!A1&A2&!B1&B2&!C1&C2	0.4239
!A1&A2&!B1&B2&C1&!C2	0.3530
!A1&A2&!B1&B2&C1&C2	0.3530
!A1&A2&B1&!B2&!C1&C2	0.3530
!A1&A2&B1&!B2&C1&!C2	0.2821
!A1&A2&B1&!B2&C1&C2	0.2821
!A1&A2&B1&B2&!C1&C2	0.3530
!A1&A2&B1&B2&C1&!C2	0.2820
!A1&A2&B1&B2&C1&C2	0.2820
A1&!A2&!B1&B2&!C1&C2	0.3530
A1&!A2&!B1&B2&C1&!C2	0.2821
A1&!A2&!B1&B2&C1&C2	0.2821
A1&!A2&B1&!B2&!C1&C2	0.2821
A1&!A2&B1&!B2&C1&!C2	0.2111
A1&!A2&B1&!B2&C1&C2	0.2111
A1&!A2&B1&B2&!C1&C2	0.2821
A1&!A2&B1&B2&C1&!C2	0.2111
A1&!A2&B1&B2&C1&C2	0.2111
A1&A2&!B1&B2&!C1&C2	0.3530
A1&A2&!B1&B2&C1&!C2	0.2820
A1&A2&!B1&B2&C1&C2	0.2820
A1&A2&B1&!B2&!C1&C2	0.2820
A1&A2&B1&!B2&C1&!C2	0.2111
A1&A2&B1&!B2&C1&C2	0.2111
A1&A2&B1&B2&!C1&C2	0.2820
A1&A2&B1&B2&C1&!C2	0.2111
A1&A2&B1&B2&C1&C2	0.2111

gf180mcu_fd_sc_mcu9t5v0__oai222_4

gf180mcu_fd_sc_mcu9t5v0__oai222_4 symbol

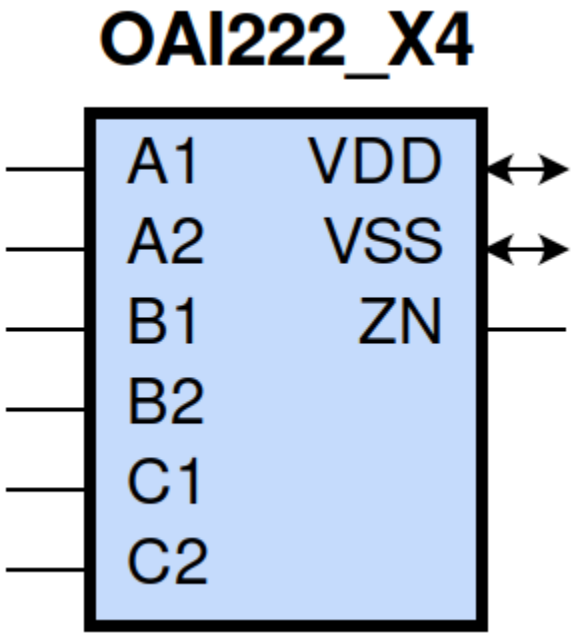

gf180mcu_fd_sc_mcu9t5v0__oai222_4 schematic

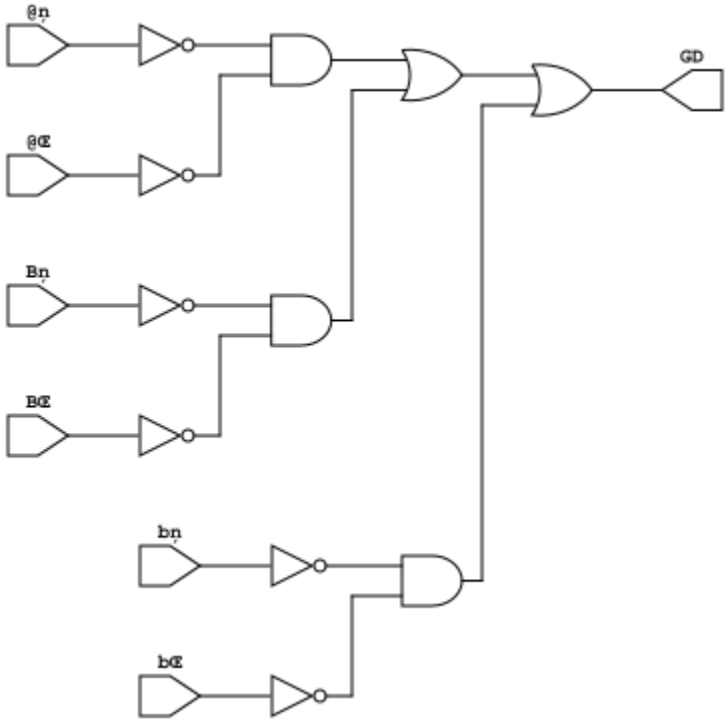

gf180mcu_fd_sc_mcu9t5v0__oai222_4 layout

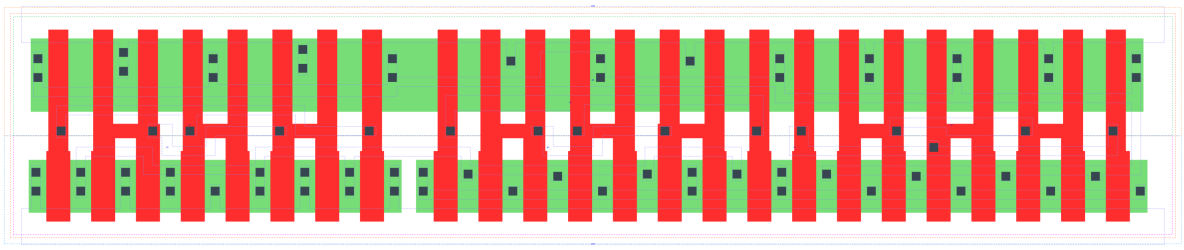

OAI222_X4 is a three 2-input OR into 3-input NAND with 4X drive strength

Attributes

Attribute	Value
area	143.942400 μm^2

OUTPUT FUNCTIONS

Output Pin	Function
ZN	(((!A1)&(!A2))|((!B1)&(!B2))|((!C1)&(!C2)))

TRUTH TABLE FOR ZN

A1	A2	B1	B2	C1	C2	ZN
0	0	?	?	?	?	1
?	?	0	0	?	?	1
?	?	?	?	0	0	1
1	?	1	?	1	?	0
1	?	1	?	?	1	0
1	?	?	1	1	?	0
1	?	?	1	?	1	0
?	1	1	?	1	?	0
?	1	1	?	?	1	0
?	1	?	1	1	?	0
?	1	?	1	?	1	0

FUNCTIONAL SCHEMATIC

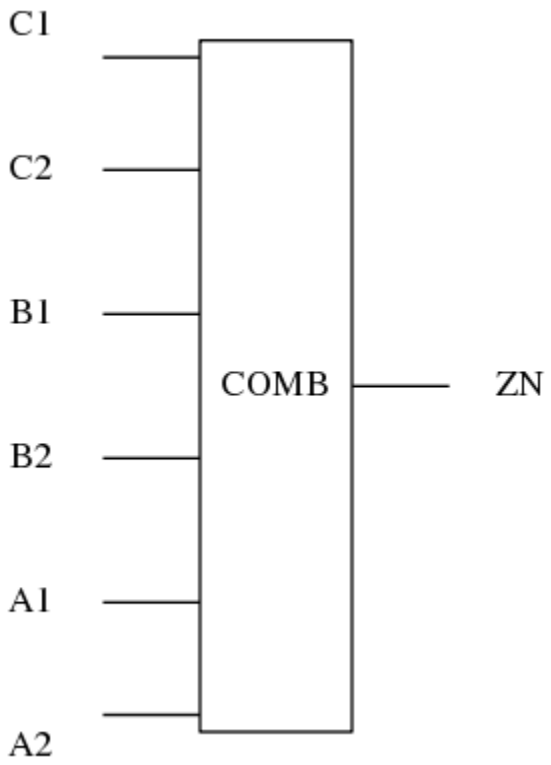

PIN CAPACITANCE (pf)

Pin	Type	Capacitance (pf)
C1	input	0.0284
C2	input	0.0266
B1	input	0.0283
B2	input	0.0262
A1	input	0.0286
A2	input	0.0267

DELAY AND OUTPUT TRANSITION TIME corresponding to min slew and load

Input Pin	Output	When Condition	Tin (ns)	Out Load (pf)	Delay (ns)	Tout (ns)
C1(LH)	ZN(HL)	!A1&A2&!B1&B2&!C2	0.0100	0.0010	0.2134	0.1044

continues on next page

Table 244 – continued from previous page

C1(LH)	ZN(HL)	!A1&A2&B1&!B2&!C2	0.0100	0.0010	0.1799	0.0831
C1(LH)	ZN(HL)	!A1&A2&B1&B2&!C2	0.0100	0.0010	0.1639	0.0701
C1(LH)	ZN(HL)	A1&!A2&!B1&B2&!C2	0.0100	0.0010	0.1799	0.0831
C1(LH)	ZN(HL)	A1&!A2&B1&!B2&!C2	0.0100	0.0010	0.1486	0.0617
C1(LH)	ZN(HL)	A1&!A2&B1&B2&!C2	0.0100	0.0010	0.1371	0.0527
C1(LH)	ZN(HL)	A1&A2&!B1&B2&!C2	0.0100	0.0010	0.1595	0.0852
C1(LH)	ZN(HL)	A1&A2&B1&!B2&!C2	0.0100	0.0010	0.1337	0.0664
C1(LH)	ZN(HL)	A1&A2&B1&B2&!C2	0.0100	0.0010	0.1183	0.0539
C1(HL)	ZN(LH)	!A1&A2&!B1&B2&!C2	0.0100	0.0010	0.2852	0.2955
C1(HL)	ZN(LH)	!A1&A2&B1&!B2&!C2	0.0100	0.0010	0.2683	0.2490
C1(HL)	ZN(LH)	!A1&A2&B1&B2&!C2	0.0100	0.0010	0.2877	0.2636
C1(HL)	ZN(LH)	A1&!A2&!B1&B2&!C2	0.0100	0.0010	0.2684	0.2492
C1(HL)	ZN(LH)	A1&!A2&B1&!B2&!C2	0.0100	0.0010	0.2531	0.2014
C1(HL)	ZN(LH)	A1&!A2&B1&B2&!C2	0.0100	0.0010	0.2718	0.2156
C1(HL)	ZN(LH)	A1&A2&!B1&B2&!C2	0.0100	0.0010	0.2978	0.2675
C1(HL)	ZN(LH)	A1&A2&B1&!B2&!C2	0.0100	0.0010	0.2835	0.2217
C1(HL)	ZN(LH)	A1&A2&B1&B2&!C2	0.0100	0.0010	0.3047	0.2369
C2(LH)	ZN(HL)	!A1&A2&!B1&B2&!C1	0.0100	0.0010	0.2445	0.1262
C2(LH)	ZN(HL)	!A1&A2&B1&!B2&!C1	0.0100	0.0010	0.2101	0.1046
C2(LH)	ZN(HL)	!A1&A2&B1&B2&!C1	0.0100	0.0010	0.1896	0.0879
C2(LH)	ZN(HL)	A1&!A2&!B1&B2&!C1	0.0100	0.0010	0.2102	0.1046
C2(LH)	ZN(HL)	A1&!A2&B1&!B2&!C1	0.0100	0.0010	0.1770	0.0837
C2(LH)	ZN(HL)	A1&!A2&B1&B2&!C1	0.0100	0.0010	0.1613	0.0703
C2(LH)	ZN(HL)	A1&A2&!B1&B2&!C1	0.0100	0.0010	0.1844	0.1035
C2(LH)	ZN(HL)	A1&A2&B1&!B2&!C1	0.0100	0.0010	0.1570	0.0853
C2(LH)	ZN(HL)	A1&A2&B1&B2&!C1	0.0100	0.0010	0.1366	0.0684
C2(HL)	ZN(LH)	!A1&A2&!B1&B2&!C1	0.0100	0.0010	0.3098	0.2956
C2(HL)	ZN(LH)	!A1&A2&B1&!B2&!C1	0.0100	0.0010	0.2929	0.2490
C2(HL)	ZN(LH)	!A1&A2&B1&B2&!C1	0.0100	0.0010	0.3123	0.2637
C2(HL)	ZN(LH)	A1&!A2&!B1&B2&!C1	0.0100	0.0010	0.2930	0.2491
C2(HL)	ZN(LH)	A1&!A2&B1&!B2&!C1	0.0100	0.0010	0.2777	0.2014
C2(HL)	ZN(LH)	A1&!A2&B1&B2&!C1	0.0100	0.0010	0.2962	0.2152
C2(HL)	ZN(LH)	A1&A2&!B1&B2&!C1	0.0100	0.0010	0.3224	0.2675
C2(HL)	ZN(LH)	A1&A2&B1&!B2&!C1	0.0100	0.0010	0.3083	0.2216
C2(HL)	ZN(LH)	A1&A2&B1&B2&!C1	0.0100	0.0010	0.3293	0.2368
B1(LH)	ZN(HL)	!A1&A2&!B2&!C1&C2	0.0100	0.0010	0.1881	0.1046
B1(LH)	ZN(HL)	!A1&A2&!B2&C1&!C2	0.0100	0.0010	0.1547	0.0831
B1(LH)	ZN(HL)	!A1&A2&!B2&C1&C2	0.0100	0.0010	0.1348	0.0684
B1(LH)	ZN(HL)	A1&!A2&!B2&!C1&C2	0.0100	0.0010	0.1548	0.0833
B1(LH)	ZN(HL)	A1&!A2&!B2&C1&!C2	0.0100	0.0010	0.1233	0.0615
B1(LH)	ZN(HL)	A1&!A2&!B2&C1&C2	0.0100	0.0010	0.1085	0.0504
B1(LH)	ZN(HL)	A1&A2&!B2&!C1&C2	0.0100	0.0010	0.1340	0.0851
B1(LH)	ZN(HL)	A1&A2&!B2&C1&!C2	0.0100	0.0010	0.1082	0.0662
B1(LH)	ZN(HL)	A1&A2&!B2&C1&C2	0.0100	0.0010	0.0937	0.0505
B1(HL)	ZN(LH)	!A1&A2&!B2&!C1&C2	0.0100	0.0010	0.2218	0.2388
B1(HL)	ZN(LH)	!A1&A2&!B2&C1&!C2	0.0100	0.0010	0.2084	0.1945
B1(HL)	ZN(LH)	!A1&A2&!B2&C1&C2	0.0100	0.0010	0.2070	0.1944
B1(HL)	ZN(LH)	A1&!A2&!B2&!C1&C2	0.0100	0.0010	0.2085	0.1948
B1(HL)	ZN(LH)	A1&!A2&!B2&C1&!C2	0.0100	0.0010	0.1968	0.1512
B1(HL)	ZN(LH)	A1&!A2&!B2&C1&C2	0.0100	0.0010	0.1955	0.1512
B1(HL)	ZN(LH)	A1&A2&!B2&!C1&C2	0.0100	0.0010	0.2330	0.2127
B1(HL)	ZN(LH)	A1&A2&!B2&C1&!C2	0.0100	0.0010	0.2217	0.1694

continues on next page

Table 244 – continued from previous page

B1(HL)	ZN(LH)	A1&A2&!B2&C1&C2	0.0100	0.0010	0.2201	0.1694
B2(HL)	ZN(LH)	!A1&A2&!B1&!C1&C2	0.0100	0.0010	0.2462	0.2389
B2(HL)	ZN(LH)	!A1&A2&!B1&C1&!C2	0.0100	0.0010	0.2328	0.1944
B2(HL)	ZN(LH)	!A1&A2&!B1&C1&C2	0.0100	0.0010	0.2314	0.1944
B2(HL)	ZN(LH)	A1&!A2&!B1&!C1&C2	0.0100	0.0010	0.2332	0.1948
B2(HL)	ZN(LH)	A1&!A2&!B1&C1&!C2	0.0100	0.0010	0.2215	0.1512
B2(HL)	ZN(LH)	A1&!A2&!B1&C1&C2	0.0100	0.0010	0.2199	0.1510
B2(HL)	ZN(LH)	A1&A2&!B1&!C1&C2	0.0100	0.0010	0.2577	0.2127
B2(HL)	ZN(LH)	A1&A2&!B1&C1&!C2	0.0100	0.0010	0.2462	0.1693
B2(HL)	ZN(LH)	A1&A2&!B1&C1&C2	0.0100	0.0010	0.2447	0.1694
B2(LH)	ZN(HL)	!A1&A2&!B1&!C1&C2	0.0100	0.0010	0.2190	0.1261
B2(LH)	ZN(HL)	!A1&A2&!B1&C1&!C2	0.0100	0.0010	0.1846	0.1045
B2(LH)	ZN(HL)	!A1&A2&!B1&C1&C2	0.0100	0.0010	0.1604	0.0864
B2(LH)	ZN(HL)	A1&!A2&!B1&!C1&C2	0.0100	0.0010	0.1848	0.1047
B2(LH)	ZN(HL)	A1&!A2&!B1&C1&!C2	0.0100	0.0010	0.1514	0.0831
B2(LH)	ZN(HL)	A1&!A2&!B1&C1&C2	0.0100	0.0010	0.1321	0.0685
B2(LH)	ZN(HL)	A1&A2&!B1&!C1&C2	0.0100	0.0010	0.1591	0.1033
B2(LH)	ZN(HL)	A1&A2&!B1&C1&!C2	0.0100	0.0010	0.1314	0.0851
B2(LH)	ZN(HL)	A1&A2&!B1&C1&C2	0.0100	0.0010	0.1119	0.0655
A1(HL)	ZN(LH)	!A2&!B1&B2&!C1&C2	0.0100	0.0010	0.1387	0.1746
A1(HL)	ZN(LH)	!A2&!B1&B2&C1&!C2	0.0100	0.0010	0.1285	0.1310
A1(HL)	ZN(LH)	!A2&!B1&B2&C1&C2	0.0100	0.0010	0.1283	0.1309
A1(HL)	ZN(LH)	!A2&B1&!B2&!C1&C2	0.0100	0.0010	0.1283	0.1313
A1(HL)	ZN(LH)	!A2&B1&!B2&C1&!C2	0.0100	0.0010	0.1197	0.0913
A1(HL)	ZN(LH)	!A2&B1&!B2&C1&C2	0.0100	0.0010	0.1194	0.0913
A1(HL)	ZN(LH)	!A2&B1&B2&!C1&C2	0.0100	0.0010	0.1275	0.1312
A1(HL)	ZN(LH)	!A2&B1&B2&C1&!C2	0.0100	0.0010	0.1186	0.0913
A1(HL)	ZN(LH)	!A2&B1&B2&C1&C2	0.0100	0.0010	0.1185	0.0913
A1(LH)	ZN(HL)	!A2&!B1&B2&!C1&C2	0.0100	0.0010	0.1415	0.1045
A1(LH)	ZN(HL)	!A2&!B1&B2&C1&!C2	0.0100	0.0010	0.1080	0.0820
A1(LH)	ZN(HL)	!A2&!B1&B2&C1&C2	0.0100	0.0010	0.0988	0.0681
A1(LH)	ZN(HL)	!A2&B1&!B2&!C1&C2	0.0100	0.0010	0.1081	0.0819
A1(LH)	ZN(HL)	!A2&B1&!B2&C1&!C2	0.0100	0.0010	0.0775	0.0586
A1(LH)	ZN(HL)	!A2&B1&!B2&C1&C2	0.0100	0.0010	0.0728	0.0492
A1(LH)	ZN(HL)	!A2&B1&B2&!C1&C2	0.0100	0.0010	0.0935	0.0674
A1(LH)	ZN(HL)	!A2&B1&B2&C1&!C2	0.0100	0.0010	0.0683	0.0474
A1(LH)	ZN(HL)	!A2&B1&B2&C1&C2	0.0100	0.0010	0.0639	0.0394
A2(HL)	ZN(LH)	!A1&!B1&B2&!C1&C2	0.0100	0.0010	0.1632	0.1746
A2(HL)	ZN(LH)	!A1&!B1&B2&C1&!C2	0.0100	0.0010	0.1529	0.1313
A2(HL)	ZN(LH)	!A1&!B1&B2&C1&C2	0.0100	0.0010	0.1528	0.1313
A2(HL)	ZN(LH)	!A1&B1&!B2&!C1&C2	0.0100	0.0010	0.1529	0.1316
A2(HL)	ZN(LH)	!A1&B1&!B2&C1&!C2	0.0100	0.0010	0.1440	0.0915
A2(HL)	ZN(LH)	!A1&B1&!B2&C1&C2	0.0100	0.0010	0.1439	0.0915
A2(HL)	ZN(LH)	!A1&B1&B2&!C1&C2	0.0100	0.0010	0.1519	0.1315
A2(HL)	ZN(LH)	!A1&B1&B2&C1&!C2	0.0100	0.0010	0.1431	0.0915
A2(HL)	ZN(LH)	!A1&B1&B2&C1&C2	0.0100	0.0010	0.1429	0.0916
A2(LH)	ZN(HL)	!A1&!B1&B2&!C1&C2	0.0100	0.0010	0.1725	0.1260
A2(LH)	ZN(HL)	!A1&!B1&B2&C1&!C2	0.0100	0.0010	0.1380	0.1040
A2(LH)	ZN(HL)	!A1&!B1&B2&C1&C2	0.0100	0.0010	0.1245	0.0865
A2(LH)	ZN(HL)	!A1&B1&!B2&!C1&C2	0.0100	0.0010	0.1381	0.1044
A2(LH)	ZN(HL)	!A1&B1&!B2&C1&!C2	0.0100	0.0010	0.1048	0.0820
A2(LH)	ZN(HL)	!A1&B1&!B2&C1&C2	0.0100	0.0010	0.0961	0.0683

continues on next page

Table 244 – continued from previous page

A2(LH)	ZN(HL)	!A1&B1&B2&!C1&C2	0.0100	0.0010	0.1189	0.0865
A2(LH)	ZN(HL)	!A1&B1&B2&C1&!C2	0.0100	0.0010	0.0907	0.0675
A2(LH)	ZN(HL)	!A1&B1&B2&C1&C2	0.0100	0.0010	0.0824	0.0548

DYNAMIC ENERGY

Input Pin	When Condition	Tin (ns)	Output	Out Load (pf)	Energy (uW/MHz)
A1	!A2&!B1&B2&!C1&C2	0.0100	ZN(LH)	0.0010	1.1956
A1	!A2&!B1&B2&C1&!C2	0.0100	ZN(LH)	0.0010	1.0176
A1	!A2&!B1&B2&C1&C2	0.0100	ZN(LH)	0.0010	1.0173
A1	!A2&B1&!B2&!C1&C2	0.0100	ZN(LH)	0.0010	1.0193
A1	!A2&B1&!B2&C1&!C2	0.0100	ZN(LH)	0.0010	0.8407
A1	!A2&B1&!B2&C1&C2	0.0100	ZN(LH)	0.0010	0.8400
A1	!A2&B1&B2&!C1&C2	0.0100	ZN(LH)	0.0010	1.0142
A1	!A2&B1&B2&C1&!C2	0.0100	ZN(LH)	0.0010	0.8358
A1	!A2&B1&B2&C1&C2	0.0100	ZN(LH)	0.0010	0.8349
B2	!A1&A2&!B1&!C1&C2	0.0100	ZN(LH)	0.0010	1.9177
B2	!A1&A2&!B1&C1&!C2	0.0100	ZN(LH)	0.0010	1.7388
B2	!A1&A2&!B1&C1&C2	0.0100	ZN(LH)	0.0010	1.7323
B2	A1&!A2&!B1&!C1&C2	0.0100	ZN(LH)	0.0010	1.7407
B2	A1&!A2&!B1&C1&!C2	0.0100	ZN(LH)	0.0010	1.5611
B2	A1&!A2&!B1&C1&C2	0.0100	ZN(LH)	0.0010	1.5547
B2	A1&A2&!B1&!C1&C2	0.0100	ZN(LH)	0.0010	1.8851
B2	A1&A2&!B1&C1&!C2	0.0100	ZN(LH)	0.0010	1.7057
B2	A1&A2&!B1&C1&C2	0.0100	ZN(LH)	0.0010	1.7005
B1	!A1&A2&!B2&!C1&C2	0.0100	ZN(HL)	0.0010	0.4706
B1	!A1&A2&!B2&C1&!C2	0.0100	ZN(HL)	0.0010	0.3158
B1	!A1&A2&!B2&C1&C2	0.0100	ZN(HL)	0.0010	0.3158
B1	A1&!A2&!B2&!C1&C2	0.0100	ZN(HL)	0.0010	0.3183
B1	A1&!A2&!B2&C1&!C2	0.0100	ZN(HL)	0.0010	0.1639
B1	A1&!A2&!B2&C1&C2	0.0100	ZN(HL)	0.0010	0.1640
B1	A1&A2&!B2&!C1&C2	0.0100	ZN(HL)	0.0010	0.3191
B1	A1&A2&!B2&C1&!C2	0.0100	ZN(HL)	0.0010	0.1643
B1	A1&A2&!B2&C1&C2	0.0100	ZN(HL)	0.0010	0.1642
A2	!A1&!B1&B2&!C1&C2	0.0100	ZN(LH)	0.0010	1.3751
A2	!A1&!B1&B2&C1&!C2	0.0100	ZN(LH)	0.0010	1.1972
A2	!A1&!B1&B2&C1&C2	0.0100	ZN(LH)	0.0010	1.1967
A2	!A1&B1&!B2&!C1&C2	0.0100	ZN(LH)	0.0010	1.1985
A2	!A1&B1&!B2&C1&!C2	0.0100	ZN(LH)	0.0010	1.0200
A2	!A1&B1&!B2&C1&C2	0.0100	ZN(LH)	0.0010	1.0196
A2	!A1&B1&B2&!C1&C2	0.0100	ZN(LH)	0.0010	1.1943
A2	!A1&B1&B2&C1&!C2	0.0100	ZN(LH)	0.0010	1.0158
A2	!A1&B1&B2&C1&C2	0.0100	ZN(LH)	0.0010	1.0151
B1	!A1&A2&!B2&!C1&C2	0.0100	ZN(LH)	0.0010	1.7393
B1	!A1&A2&!B2&C1&!C2	0.0100	ZN(LH)	0.0010	1.5612
B1	!A1&A2&!B2&C1&C2	0.0100	ZN(LH)	0.0010	1.5543
B1	A1&!A2&!B2&!C1&C2	0.0100	ZN(LH)	0.0010	1.5621

continues on next page

Table 245 – continued from previous page

B1	A1&!A2&!B2&C1&!C2	0.0100	ZN(LH)	0.0010	1.3835
B1	A1&!A2&!B2&C1&C2	0.0100	ZN(LH)	0.0010	1.3767
B1	A1&A2&!B2&!C1&C2	0.0100	ZN(LH)	0.0010	1.7065
B1	A1&A2&!B2&C1&!C2	0.0100	ZN(LH)	0.0010	1.5279
B1	A1&A2&!B2&C1&C2	0.0100	ZN(LH)	0.0010	1.5211
C1	!A1&A2&!B1&B2&!C2	0.0100	ZN(HL)	0.0010	0.4700
C1	!A1&A2&B1&!B2&!C2	0.0100	ZN(HL)	0.0010	0.3167
C1	!A1&A2&B1&B2&!C2	0.0100	ZN(HL)	0.0010	0.3163
C1	A1&!A2&!B1&B2&!C2	0.0100	ZN(HL)	0.0010	0.3180
C1	A1&!A2&B1&!B2&!C2	0.0100	ZN(HL)	0.0010	0.1643
C1	A1&!A2&B1&B2&!C2	0.0100	ZN(HL)	0.0010	0.1643
C1	A1&A2&!B1&B2&!C2	0.0100	ZN(HL)	0.0010	0.3183
C1	A1&A2&B1&!B2&!C2	0.0100	ZN(HL)	0.0010	0.1642
C1	A1&A2&B1&B2&!C2	0.0100	ZN(HL)	0.0010	0.1645
A2	!A1&!B1&B2&!C1&C2	0.0100	ZN(HL)	0.0010	0.6019
A2	!A1&!B1&B2&C1&!C2	0.0100	ZN(HL)	0.0010	0.4487
A2	!A1&!B1&B2&C1&C2	0.0100	ZN(HL)	0.0010	0.4483
A2	!A1&B1&!B2&!C1&C2	0.0100	ZN(HL)	0.0010	0.4503
A2	!A1&B1&!B2&C1&!C2	0.0100	ZN(HL)	0.0010	0.2969
A2	!A1&B1&!B2&C1&C2	0.0100	ZN(HL)	0.0010	0.2966
A2	!A1&B1&B2&!C1&C2	0.0100	ZN(HL)	0.0010	0.4497
A2	!A1&B1&B2&C1&!C2	0.0100	ZN(HL)	0.0010	0.2967
A2	!A1&B1&B2&C1&C2	0.0100	ZN(HL)	0.0010	0.2964
C2	!A1&A2&!B1&B2&!C1	0.0100	ZN(HL)	0.0010	0.6001
C2	!A1&A2&B1&!B2&!C1	0.0100	ZN(HL)	0.0010	0.4478
C2	!A1&A2&B1&B2&!C1	0.0100	ZN(HL)	0.0010	0.4482
C2	A1&!A2&!B1&B2&!C1	0.0100	ZN(HL)	0.0010	0.4491
C2	A1&!A2&B1&!B2&!C1	0.0100	ZN(HL)	0.0010	0.2981
C2	A1&!A2&B1&B2&!C1	0.0100	ZN(HL)	0.0010	0.2975
C2	A1&A2&!B1&B2&!C1	0.0100	ZN(HL)	0.0010	0.4494
C2	A1&A2&B1&!B2&!C1	0.0100	ZN(HL)	0.0010	0.2976
C2	A1&A2&B1&B2&!C1	0.0100	ZN(HL)	0.0010	0.2975
C1	!A1&A2&!B1&B2&!C2	0.0100	ZN(LH)	0.0010	2.2107
C1	!A1&A2&B1&!B2&!C2	0.0100	ZN(LH)	0.0010	2.0335
C1	!A1&A2&B1&B2&!C2	0.0100	ZN(LH)	0.0010	2.1734
C1	A1&!A2&!B1&B2&!C2	0.0100	ZN(LH)	0.0010	2.0328
C1	A1&!A2&B1&!B2&!C2	0.0100	ZN(LH)	0.0010	1.8566
C1	A1&!A2&B1&B2&!C2	0.0100	ZN(LH)	0.0010	1.9958
C1	A1&A2&!B1&B2&!C2	0.0100	ZN(LH)	0.0010	2.1745
C1	A1&A2&B1&!B2&!C2	0.0100	ZN(LH)	0.0010	1.9971
C1	A1&A2&B1&B2&!C2	0.0100	ZN(LH)	0.0010	2.1382
C2	!A1&A2&!B1&B2&!C1	0.0100	ZN(LH)	0.0010	2.3892
C2	!A1&A2&B1&!B2&!C1	0.0100	ZN(LH)	0.0010	2.2120
C2	!A1&A2&B1&B2&!C1	0.0100	ZN(LH)	0.0010	2.3520
C2	A1&!A2&!B1&B2&!C1	0.0100	ZN(LH)	0.0010	2.2116
C2	A1&!A2&B1&!B2&!C1	0.0100	ZN(LH)	0.0010	2.0351
C2	A1&!A2&B1&B2&!C1	0.0100	ZN(LH)	0.0010	2.1752
C2	A1&A2&!B1&B2&!C1	0.0100	ZN(LH)	0.0010	2.3533
C2	A1&A2&B1&!B2&!C1	0.0100	ZN(LH)	0.0010	2.1753
C2	A1&A2&B1&B2&!C1	0.0100	ZN(LH)	0.0010	2.3168
A1	!A2&!B1&B2&!C1&C2	0.0100	ZN(HL)	0.0010	0.4741
A1	!A2&!B1&B2&C1&!C2	0.0100	ZN(HL)	0.0010	0.3197

continues on next page

Table 245 – continued from previous page

A1	!A2&!B1&B2&C1&C2	0.0100	ZN(HL)	0.0010	0.3191
A1	!A2&B1&!B2&!C1&C2	0.0100	ZN(HL)	0.0010	0.3205
A1	!A2&B1&!B2&C1&!C2	0.0100	ZN(HL)	0.0010	0.1658
A1	!A2&B1&!B2&C1&C2	0.0100	ZN(HL)	0.0010	0.1656
A1	!A2&B1&B2&!C1&C2	0.0100	ZN(HL)	0.0010	0.3204
A1	!A2&B1&B2&C1&!C2	0.0100	ZN(HL)	0.0010	0.1654
A1	!A2&B1&B2&C1&C2	0.0100	ZN(HL)	0.0010	0.1655
B2	!A1&A2&!B1&!C1&C2	0.0100	ZN(HL)	0.0010	0.5992
B2	!A1&A2&!B1&C1&!C2	0.0100	ZN(HL)	0.0010	0.4463
B2	!A1&A2&!B1&C1&C2	0.0100	ZN(HL)	0.0010	0.4459
B2	A1&!A2&!B1&!C1&C2	0.0100	ZN(HL)	0.0010	0.4488
B2	A1&!A2&!B1&C1&!C2	0.0100	ZN(HL)	0.0010	0.2959
B2	A1&!A2&!B1&C1&C2	0.0100	ZN(HL)	0.0010	0.2957
B2	A1&A2&!B1&!C1&C2	0.0100	ZN(HL)	0.0010	0.4488
B2	A1&A2&!B1&C1&!C2	0.0100	ZN(HL)	0.0010	0.2963
B2	A1&A2&!B1&C1&C2	0.0100	ZN(HL)	0.0010	0.2961
B2(LH)	!A1&!A2&!B1&!C1&!C2	0.0100	n/a	n/a	-0.2378
B2(LH)	!A1&!A2&!B1&!C1&C2	0.0100	n/a	n/a	-0.2376
B2(LH)	!A1&!A2&!B1&C1&!C2	0.0100	n/a	n/a	-0.2375
B2(LH)	!A1&!A2&!B1&C1&C2	0.0100	n/a	n/a	-0.2377
B2(LH)	!A1&!A2&B1&!C1&!C2	0.0100	n/a	n/a	-0.2311
B2(LH)	!A1&!A2&B1&!C1&C2	0.0100	n/a	n/a	-0.2311
B2(LH)	!A1&!A2&B1&C1&!C2	0.0100	n/a	n/a	-0.2311
B2(LH)	!A1&!A2&B1&C1&C2	0.0100	n/a	n/a	-0.2310
B2(LH)	!A1&A2&!B1&!C1&!C2	0.0100	n/a	n/a	0.0355
B2(LH)	!A1&A2&B1&!C1&!C2	0.0100	n/a	n/a	-0.2309
B2(LH)	A1&!A2&!B1&!C1&!C2	0.0100	n/a	n/a	0.0354
B2(LH)	A1&!A2&B1&!C1&!C2	0.0100	n/a	n/a	-0.2309
B2(LH)	A1&A2&!B1&!C1&!C2	0.0100	n/a	n/a	0.0354
B2(LH)	A1&A2&B1&!C1&!C2	0.0100	n/a	n/a	-0.2309
B2(LH)	!A1&A2&B1&!C1&C2	0.0100	n/a	n/a	-0.1995
B2(LH)	!A1&A2&B1&C1&!C2	0.0100	n/a	n/a	-0.1994
B2(LH)	!A1&A2&B1&C1&C2	0.0100	n/a	n/a	-0.1991
B2(LH)	A1&!A2&B1&!C1&C2	0.0100	n/a	n/a	-0.1995
B2(LH)	A1&!A2&B1&C1&!C2	0.0100	n/a	n/a	-0.1994
B2(LH)	A1&!A2&B1&C1&C2	0.0100	n/a	n/a	-0.1991
B2(LH)	A1&A2&B1&!C1&C2	0.0100	n/a	n/a	-0.1992
B2(LH)	A1&A2&B1&C1&!C2	0.0100	n/a	n/a	-0.1993
B2(LH)	A1&A2&B1&C1&C2	0.0100	n/a	n/a	-0.1993
C2(HL)	!A1&!A2&!B1&!B2&!C1	0.0100	n/a	n/a	0.2389
C2(HL)	!A1&!A2&!B1&!B2&C1	0.0100	n/a	n/a	0.2384
C2(HL)	!A1&!A2&!B1&B2&!C1	0.0100	n/a	n/a	0.2404
C2(HL)	!A1&!A2&!B1&B2&C1	0.0100	n/a	n/a	0.2384
C2(HL)	!A1&!A2&B1&!B2&!C1	0.0100	n/a	n/a	0.2404
C2(HL)	!A1&!A2&B1&!B2&C1	0.0100	n/a	n/a	0.2384
C2(HL)	!A1&!A2&B1&B2&!C1	0.0100	n/a	n/a	0.2397
C2(HL)	!A1&!A2&B1&B2&C1	0.0100	n/a	n/a	0.2384
C2(HL)	!A1&A2&!B1&!B2&!C1	0.0100	n/a	n/a	0.2457
C2(HL)	!A1&A2&!B1&!B2&C1	0.0100	n/a	n/a	0.2384
C2(HL)	A1&!A2&!B1&!B2&!C1	0.0100	n/a	n/a	0.2456
C2(HL)	A1&!A2&!B1&!B2&C1	0.0100	n/a	n/a	0.2384
C2(HL)	A1&A2&!B1&!B2&!C1	0.0100	n/a	n/a	0.2453

continues on next page

Table 245 – continued from previous page

C2(HL)	A1&A2&!B1&!B2&C1	0.0100	n/a	n/a	0.2384
C2(HL)	!A1&A2&!B1&B2&C1	0.0100	n/a	n/a	0.2384
C2(HL)	!A1&A2&B1&!B2&C1	0.0100	n/a	n/a	0.2384
C2(HL)	!A1&A2&B1&B2&C1	0.0100	n/a	n/a	0.2384
C2(HL)	A1&!A2&!B1&B2&C1	0.0100	n/a	n/a	0.2384
C2(HL)	A1&!A2&B1&!B2&C1	0.0100	n/a	n/a	0.2384
C2(HL)	A1&!A2&B1&B2&C1	0.0100	n/a	n/a	0.2384
C2(HL)	A1&A2&!B1&B2&C1	0.0100	n/a	n/a	0.2384
C2(HL)	A1&A2&B1&!B2&C1	0.0100	n/a	n/a	0.2384
C2(HL)	A1&A2&B1&B2&C1	0.0100	n/a	n/a	0.2384
B2(HL)	!A1&!A2&!B1&!C1&!C2	0.0100	n/a	n/a	0.3180
B2(HL)	!A1&!A2&!B1&!C1&C2	0.0100	n/a	n/a	0.2847
B2(HL)	!A1&!A2&!B1&C1&!C2	0.0100	n/a	n/a	0.2847
B2(HL)	!A1&!A2&!B1&C1&C2	0.0100	n/a	n/a	0.2793
B2(HL)	!A1&!A2&B1&!C1&!C2	0.0100	n/a	n/a	0.3266
B2(HL)	!A1&!A2&B1&!C1&C2	0.0100	n/a	n/a	0.2387
B2(HL)	!A1&!A2&B1&C1&!C2	0.0100	n/a	n/a	0.2387
B2(HL)	!A1&!A2&B1&C1&C2	0.0100	n/a	n/a	0.2384
B2(HL)	!A1&A2&!B1&!C1&!C2	0.0100	n/a	n/a	0.2526
B2(HL)	!A1&A2&B1&!C1&!C2	0.0100	n/a	n/a	0.2603
B2(HL)	A1&!A2&!B1&!C1&!C2	0.0100	n/a	n/a	0.2526
B2(HL)	A1&!A2&B1&!C1&!C2	0.0100	n/a	n/a	0.2603
B2(HL)	A1&A2&!B1&!C1&!C2	0.0100	n/a	n/a	0.2521
B2(HL)	A1&A2&B1&!C1&!C2	0.0100	n/a	n/a	0.2598
B2(HL)	!A1&A2&B1&!C1&C2	0.0100	n/a	n/a	0.2384
B2(HL)	!A1&A2&B1&C1&!C2	0.0100	n/a	n/a	0.2384
B2(HL)	!A1&A2&B1&C1&C2	0.0100	n/a	n/a	0.2384
B2(HL)	A1&!A2&B1&!C1&C2	0.0100	n/a	n/a	0.2384
B2(HL)	A1&!A2&B1&C1&!C2	0.0100	n/a	n/a	0.2384
B2(HL)	A1&!A2&B1&C1&C2	0.0100	n/a	n/a	0.2384
B2(HL)	A1&A2&B1&!C1&C2	0.0100	n/a	n/a	0.2383
B2(HL)	A1&A2&B1&C1&!C2	0.0100	n/a	n/a	0.2383
B2(HL)	A1&A2&B1&C1&C2	0.0100	n/a	n/a	0.2383
C2(LH)	!A1&!A2&!B1&!B2&!C1	0.0100	n/a	n/a	-0.2379
C2(LH)	!A1&!A2&!B1&!B2&C1	0.0100	n/a	n/a	-0.2308
C2(LH)	!A1&!A2&!B1&B2&!C1	0.0100	n/a	n/a	-0.2378
C2(LH)	!A1&!A2&!B1&B2&C1	0.0100	n/a	n/a	-0.2308
C2(LH)	!A1&!A2&B1&!B2&!C1	0.0100	n/a	n/a	-0.2377
C2(LH)	!A1&!A2&B1&!B2&C1	0.0100	n/a	n/a	-0.2308
C2(LH)	!A1&!A2&B1&B2&!C1	0.0100	n/a	n/a	-0.2376
C2(LH)	!A1&!A2&B1&B2&C1	0.0100	n/a	n/a	-0.2308
C2(LH)	!A1&A2&!B1&!B2&!C1	0.0100	n/a	n/a	-0.2379
C2(LH)	!A1&A2&!B1&!B2&C1	0.0100	n/a	n/a	-0.2308
C2(LH)	A1&!A2&!B1&!B2&!C1	0.0100	n/a	n/a	-0.2379
C2(LH)	A1&!A2&!B1&!B2&C1	0.0100	n/a	n/a	-0.2308
C2(LH)	A1&A2&!B1&!B2&!C1	0.0100	n/a	n/a	-0.2379
C2(LH)	A1&A2&!B1&!B2&C1	0.0100	n/a	n/a	-0.2308
C2(LH)	!A1&A2&!B1&B2&C1	0.0100	n/a	n/a	-0.1989
C2(LH)	!A1&A2&B1&!B2&C1	0.0100	n/a	n/a	-0.1989
C2(LH)	!A1&A2&B1&B2&C1	0.0100	n/a	n/a	-0.1989
C2(LH)	A1&!A2&!B1&B2&C1	0.0100	n/a	n/a	-0.1989
C2(LH)	A1&!A2&B1&!B2&C1	0.0100	n/a	n/a	-0.1989

continues on next page

Table 245 – continued from previous page

C2(LH)	A1&!A2&B1&B2&C1	0.0100	n/a	n/a	-0.1989
C2(LH)	A1&A2&!B1&B2&C1	0.0100	n/a	n/a	-0.1989
C2(LH)	A1&A2&B1&!B2&C1	0.0100	n/a	n/a	-0.1989
C2(LH)	A1&A2&B1&B2&C1	0.0100	n/a	n/a	-0.1989
A2(LH)	!A1&!B1&!B2&!C1&!C2	0.0100	n/a	n/a	0.1000
A2(LH)	!A1&!B1&!B2&!C1&C2	0.0100	n/a	n/a	0.1001
A2(LH)	!A1&!B1&!B2&C1&!C2	0.0100	n/a	n/a	0.1000
A2(LH)	!A1&!B1&!B2&C1&C2	0.0100	n/a	n/a	0.1000
A2(LH)	!A1&!B1&B2&!C1&!C2	0.0100	n/a	n/a	0.5931
A2(LH)	!A1&B1&!B2&!C1&!C2	0.0100	n/a	n/a	0.5931
A2(LH)	!A1&B1&B2&!C1&!C2	0.0100	n/a	n/a	0.7283
A2(LH)	A1&!B1&!B2&!C1&!C2	0.0100	n/a	n/a	-0.2602
A2(LH)	A1&!B1&!B2&!C1&C2	0.0100	n/a	n/a	-0.2601
A2(LH)	A1&!B1&!B2&C1&!C2	0.0100	n/a	n/a	-0.2601
A2(LH)	A1&!B1&!B2&C1&C2	0.0100	n/a	n/a	-0.2601
A2(LH)	A1&!B1&B2&!C1&!C2	0.0100	n/a	n/a	-0.2601
A2(LH)	A1&B1&!B2&!C1&!C2	0.0100	n/a	n/a	-0.2601
A2(LH)	A1&B1&B2&!C1&!C2	0.0100	n/a	n/a	-0.2601
A2(LH)	A1&!B1&B2&!C1&C2	0.0100	n/a	n/a	-0.1991
A2(LH)	A1&!B1&B2&C1&!C2	0.0100	n/a	n/a	-0.1991
A2(LH)	A1&!B1&B2&C1&C2	0.0100	n/a	n/a	-0.1990
A2(LH)	A1&B1&!B2&!C1&C2	0.0100	n/a	n/a	-0.1991
A2(LH)	A1&B1&!B2&C1&!C2	0.0100	n/a	n/a	-0.1991
A2(LH)	A1&B1&!B2&C1&C2	0.0100	n/a	n/a	-0.1990
A2(LH)	A1&B1&B2&!C1&C2	0.0100	n/a	n/a	-0.1990
A2(LH)	A1&B1&B2&C1&!C2	0.0100	n/a	n/a	-0.1990
A2(LH)	A1&B1&B2&C1&C2	0.0100	n/a	n/a	-0.1990
A1(LH)	!A2&!B1&!B2&!C1&!C2	0.0100	n/a	n/a	0.0983
A1(LH)	!A2&!B1&!B2&!C1&C2	0.0100	n/a	n/a	0.0984
A1(LH)	!A2&!B1&!B2&C1&!C2	0.0100	n/a	n/a	0.0983
A1(LH)	!A2&!B1&!B2&C1&C2	0.0100	n/a	n/a	0.0983
A1(LH)	!A2&!B1&B2&!C1&!C2	0.0100	n/a	n/a	0.5912
A1(LH)	!A2&B1&!B2&!C1&!C2	0.0100	n/a	n/a	0.5911
A1(LH)	!A2&B1&B2&!C1&!C2	0.0100	n/a	n/a	0.7265
A1(LH)	A2&!B1&!B2&!C1&!C2	0.0100	n/a	n/a	-0.2625
A1(LH)	A2&!B1&!B2&!C1&C2	0.0100	n/a	n/a	-0.2619
A1(LH)	A2&!B1&!B2&C1&!C2	0.0100	n/a	n/a	-0.2619
A1(LH)	A2&!B1&!B2&C1&C2	0.0100	n/a	n/a	-0.2619
A1(LH)	A2&!B1&B2&!C1&!C2	0.0100	n/a	n/a	-0.2619
A1(LH)	A2&B1&!B2&!C1&!C2	0.0100	n/a	n/a	-0.2619
A1(LH)	A2&B1&B2&!C1&!C2	0.0100	n/a	n/a	-0.2619
A1(LH)	A2&!B1&B2&!C1&C2	0.0100	n/a	n/a	-0.0675
A1(LH)	A2&!B1&B2&C1&!C2	0.0100	n/a	n/a	-0.0675
A1(LH)	A2&!B1&B2&C1&C2	0.0100	n/a	n/a	-0.0675
A1(LH)	A2&B1&!B2&!C1&C2	0.0100	n/a	n/a	-0.0675
A1(LH)	A2&B1&!B2&C1&!C2	0.0100	n/a	n/a	-0.0675
A1(LH)	A2&B1&!B2&C1&C2	0.0100	n/a	n/a	-0.0675
A1(LH)	A2&B1&B2&!C1&C2	0.0100	n/a	n/a	-0.0675
A1(LH)	A2&B1&B2&C1&!C2	0.0100	n/a	n/a	-0.0675
A1(LH)	A2&B1&B2&C1&C2	0.0100	n/a	n/a	-0.0675
C1(LH)	!A1&!A2&!B1&!B2&!C2	0.0100	n/a	n/a	-0.2395
C1(LH)	!A1&!A2&!B1&!B2&C2	0.0100	n/a	n/a	-0.2333

continues on next page

Table 245 – continued from previous page

C1(LH)	!A1&!A2&!B1&B2&!C2	0.0100	n/a	n/a	-0.2393
C1(LH)	!A1&!A2&!B1&B2&C2	0.0100	n/a	n/a	-0.2328
C1(LH)	!A1&!A2&B1&!B2&!C2	0.0100	n/a	n/a	-0.2392
C1(LH)	!A1&!A2&B1&!B2&C2	0.0100	n/a	n/a	-0.2327
C1(LH)	!A1&!A2&B1&B2&!C2	0.0100	n/a	n/a	-0.2393
C1(LH)	!A1&!A2&B1&B2&C2	0.0100	n/a	n/a	-0.2328
C1(LH)	!A1&A2&!B1&!B2&!C2	0.0100	n/a	n/a	-0.2395
C1(LH)	!A1&A2&!B1&!B2&C2	0.0100	n/a	n/a	-0.2327
C1(LH)	A1&!A2&!B1&!B2&!C2	0.0100	n/a	n/a	-0.2393
C1(LH)	A1&!A2&!B1&!B2&C2	0.0100	n/a	n/a	-0.2328
C1(LH)	A1&A2&!B1&!B2&!C2	0.0100	n/a	n/a	-0.2393
C1(LH)	A1&A2&!B1&!B2&C2	0.0100	n/a	n/a	-0.2328
C1(LH)	!A1&A2&!B1&B2&C2	0.0100	n/a	n/a	-0.0677
C1(LH)	!A1&A2&B1&!B2&C2	0.0100	n/a	n/a	-0.0677
C1(LH)	!A1&A2&B1&B2&C2	0.0100	n/a	n/a	-0.0678
C1(LH)	A1&!A2&!B1&B2&C2	0.0100	n/a	n/a	-0.0677
C1(LH)	A1&!A2&B1&!B2&C2	0.0100	n/a	n/a	-0.0678
C1(LH)	A1&!A2&B1&B2&C2	0.0100	n/a	n/a	-0.0678
C1(LH)	A1&A2&!B1&B2&C2	0.0100	n/a	n/a	-0.0677
C1(LH)	A1&A2&B1&!B2&C2	0.0100	n/a	n/a	-0.0677
C1(LH)	A1&A2&B1&B2&C2	0.0100	n/a	n/a	-0.0677
A2(HL)	!A1&!B1&!B2&!C1&!C2	0.0100	n/a	n/a	0.2677
A2(HL)	!A1&!B1&!B2&!C1&C2	0.0100	n/a	n/a	0.2677
A2(HL)	!A1&!B1&!B2&C1&!C2	0.0100	n/a	n/a	0.2676
A2(HL)	!A1&!B1&!B2&C1&C2	0.0100	n/a	n/a	0.2676
A2(HL)	!A1&!B1&B2&!C1&!C2	0.0100	n/a	n/a	0.2676
A2(HL)	!A1&B1&!B2&!C1&!C2	0.0100	n/a	n/a	0.2676
A2(HL)	!A1&B1&B2&!C1&!C2	0.0100	n/a	n/a	0.2676
A2(HL)	A1&!B1&!B2&!C1&!C2	0.0100	n/a	n/a	0.2776
A2(HL)	A1&!B1&!B2&!C1&C2	0.0100	n/a	n/a	0.2777
A2(HL)	A1&!B1&!B2&C1&!C2	0.0100	n/a	n/a	0.2776
A2(HL)	A1&!B1&!B2&C1&C2	0.0100	n/a	n/a	0.2776
A2(HL)	A1&!B1&B2&!C1&!C2	0.0100	n/a	n/a	0.2776
A2(HL)	A1&B1&!B2&!C1&!C2	0.0100	n/a	n/a	0.2776
A2(HL)	A1&B1&B2&!C1&!C2	0.0100	n/a	n/a	0.2762
A2(HL)	A1&!B1&B2&!C1&C2	0.0100	n/a	n/a	0.2382
A2(HL)	A1&!B1&B2&C1&!C2	0.0100	n/a	n/a	0.2382
A2(HL)	A1&!B1&B2&C1&C2	0.0100	n/a	n/a	0.2382
A2(HL)	A1&B1&!B2&!C1&C2	0.0100	n/a	n/a	0.2382
A2(HL)	A1&B1&!B2&C1&!C2	0.0100	n/a	n/a	0.2382
A2(HL)	A1&B1&!B2&C1&C2	0.0100	n/a	n/a	0.2382
A2(HL)	A1&B1&B2&!C1&C2	0.0100	n/a	n/a	0.2382
A2(HL)	A1&B1&B2&C1&!C2	0.0100	n/a	n/a	0.2382
A2(HL)	A1&B1&B2&C1&C2	0.0100	n/a	n/a	0.2382
B1(HL)	!A1&!A2&!B2&!C1&!C2	0.0100	n/a	n/a	0.3180
B1(HL)	!A1&!A2&!B2&!C1&C2	0.0100	n/a	n/a	0.2850
B1(HL)	!A1&!A2&!B2&C1&!C2	0.0100	n/a	n/a	0.2849
B1(HL)	!A1&!A2&!B2&C1&C2	0.0100	n/a	n/a	0.2795
B1(HL)	!A1&!A2&B2&!C1&!C2	0.0100	n/a	n/a	0.3253
B1(HL)	!A1&!A2&B2&!C1&C2	0.0100	n/a	n/a	0.2391
B1(HL)	!A1&!A2&B2&C1&!C2	0.0100	n/a	n/a	0.2389
B1(HL)	!A1&!A2&B2&C1&C2	0.0100	n/a	n/a	0.2388

continues on next page

Table 245 – continued from previous page

B1(HL)	!A1&A2&!B2&!C1&!C2	0.0100	n/a	n/a	0.2535
B1(HL)	!A1&A2&B2&!C1&!C2	0.0100	n/a	n/a	0.2609
B1(HL)	A1&!A2&!B2&!C1&!C2	0.0100	n/a	n/a	0.2535
B1(HL)	A1&!A2&B2&!C1&!C2	0.0100	n/a	n/a	0.2608
B1(HL)	A1&A2&!B2&!C1&!C2	0.0100	n/a	n/a	0.2530
B1(HL)	A1&A2&B2&!C1&!C2	0.0100	n/a	n/a	0.2603
B1(HL)	!A1&A2&B2&!C1&C2	0.0100	n/a	n/a	0.1624
B1(HL)	!A1&A2&B2&C1&!C2	0.0100	n/a	n/a	0.1624
B1(HL)	!A1&A2&B2&C1&C2	0.0100	n/a	n/a	0.1624
B1(HL)	A1&!A2&B2&!C1&C2	0.0100	n/a	n/a	0.1625
B1(HL)	A1&!A2&B2&C1&!C2	0.0100	n/a	n/a	0.1625
B1(HL)	A1&!A2&B2&C1&C2	0.0100	n/a	n/a	0.1624
B1(HL)	A1&A2&B2&!C1&C2	0.0100	n/a	n/a	0.1624
B1(HL)	A1&A2&B2&C1&!C2	0.0100	n/a	n/a	0.1624
B1(HL)	A1&A2&B2&C1&C2	0.0100	n/a	n/a	0.1623
C1(HL)	!A1&!A2&!B1&!B2&!C2	0.0100	n/a	n/a	0.2398
C1(HL)	!A1&!A2&!B1&!B2&C2	0.0100	n/a	n/a	0.2389
C1(HL)	!A1&!A2&!B1&B2&!C2	0.0100	n/a	n/a	0.2411
C1(HL)	!A1&!A2&!B1&B2&C2	0.0100	n/a	n/a	0.2389
C1(HL)	!A1&!A2&B1&!B2&!C2	0.0100	n/a	n/a	0.2411
C1(HL)	!A1&!A2&B1&!B2&C2	0.0100	n/a	n/a	0.2388
C1(HL)	!A1&!A2&B1&B2&!C2	0.0100	n/a	n/a	0.2404
C1(HL)	!A1&!A2&B1&B2&C2	0.0100	n/a	n/a	0.2388
C1(HL)	!A1&A2&!B1&!B2&!C2	0.0100	n/a	n/a	0.2465
C1(HL)	!A1&A2&!B1&!B2&C2	0.0100	n/a	n/a	0.2389
C1(HL)	A1&!A2&!B1&!B2&!C2	0.0100	n/a	n/a	0.2465
C1(HL)	A1&!A2&!B1&!B2&C2	0.0100	n/a	n/a	0.2390
C1(HL)	A1&A2&!B1&!B2&!C2	0.0100	n/a	n/a	0.2461
C1(HL)	A1&A2&!B1&!B2&C2	0.0100	n/a	n/a	0.2390
C1(HL)	!A1&A2&!B1&B2&C2	0.0100	n/a	n/a	0.1637
C1(HL)	!A1&A2&B1&!B2&C2	0.0100	n/a	n/a	0.1637
C1(HL)	!A1&A2&B1&B2&C2	0.0100	n/a	n/a	0.1636
C1(HL)	A1&!A2&!B1&B2&C2	0.0100	n/a	n/a	0.1637
C1(HL)	A1&!A2&B1&!B2&C2	0.0100	n/a	n/a	0.1637
C1(HL)	A1&!A2&B1&B2&C2	0.0100	n/a	n/a	0.1636
C1(HL)	A1&A2&!B1&B2&C2	0.0100	n/a	n/a	0.1637
C1(HL)	A1&A2&B1&!B2&C2	0.0100	n/a	n/a	0.1637
C1(HL)	A1&A2&B1&B2&C2	0.0100	n/a	n/a	0.1636
A1(HL)	!A2&!B1&!B2&!C1&!C2	0.0100	n/a	n/a	0.2687
A1(HL)	!A2&!B1&!B2&!C1&C2	0.0100	n/a	n/a	0.2685
A1(HL)	!A2&!B1&!B2&C1&!C2	0.0100	n/a	n/a	0.2684
A1(HL)	!A2&!B1&!B2&C1&C2	0.0100	n/a	n/a	0.2684
A1(HL)	!A2&!B1&B2&!C1&!C2	0.0100	n/a	n/a	0.2685
A1(HL)	!A2&B1&!B2&!C1&!C2	0.0100	n/a	n/a	0.2684
A1(HL)	!A2&B1&B2&!C1&!C2	0.0100	n/a	n/a	0.2684
A1(HL)	A2&!B1&!B2&!C1&!C2	0.0100	n/a	n/a	0.2778
A1(HL)	A2&!B1&!B2&!C1&C2	0.0100	n/a	n/a	0.2778
A1(HL)	A2&!B1&!B2&C1&!C2	0.0100	n/a	n/a	0.2776
A1(HL)	A2&!B1&!B2&C1&C2	0.0100	n/a	n/a	0.2777
A1(HL)	A2&!B1&B2&!C1&!C2	0.0100	n/a	n/a	0.2777
A1(HL)	A2&B1&!B2&!C1&!C2	0.0100	n/a	n/a	0.2775
A1(HL)	A2&B1&B2&!C1&!C2	0.0100	n/a	n/a	0.2761

continues on next page

Table 245 – continued from previous page

A1(HL)	A2&!B1&B2&!C1&C2	0.0100	n/a	n/a	0.1610
A1(HL)	A2&!B1&B2&C1&!C2	0.0100	n/a	n/a	0.1610
A1(HL)	A2&!B1&B2&C1&C2	0.0100	n/a	n/a	0.1610
A1(HL)	A2&B1&!B2&!C1&C2	0.0100	n/a	n/a	0.1610
A1(HL)	A2&B1&!B2&C1&!C2	0.0100	n/a	n/a	0.1610
A1(HL)	A2&B1&!B2&C1&C2	0.0100	n/a	n/a	0.1610
A1(HL)	A2&B1&B2&!C1&C2	0.0100	n/a	n/a	0.1610
A1(HL)	A2&B1&B2&C1&!C2	0.0100	n/a	n/a	0.1610
A1(HL)	A2&B1&B2&C1&C2	0.0100	n/a	n/a	0.1610
B1(LH)	!A1&!A2&!B2&!C1&!C2	0.0100	n/a	n/a	-0.2396
B1(LH)	!A1&!A2&!B2&!C1&C2	0.0100	n/a	n/a	-0.2395
B1(LH)	!A1&!A2&!B2&C1&!C2	0.0100	n/a	n/a	-0.2394
B1(LH)	!A1&!A2&!B2&C1&C2	0.0100	n/a	n/a	-0.2395
B1(LH)	!A1&!A2&B2&!C1&!C2	0.0100	n/a	n/a	-0.2336
B1(LH)	!A1&!A2&B2&!C1&C2	0.0100	n/a	n/a	-0.2329
B1(LH)	!A1&!A2&B2&C1&!C2	0.0100	n/a	n/a	-0.2331
B1(LH)	!A1&!A2&B2&C1&C2	0.0100	n/a	n/a	-0.2330
B1(LH)	!A1&A2&!B2&!C1&!C2	0.0100	n/a	n/a	0.0339
B1(LH)	!A1&A2&B2&!C1&!C2	0.0100	n/a	n/a	-0.2331
B1(LH)	A1&!A2&!B2&!C1&!C2	0.0100	n/a	n/a	0.0339
B1(LH)	A1&!A2&B2&!C1&!C2	0.0100	n/a	n/a	-0.2332
B1(LH)	A1&A2&!B2&!C1&!C2	0.0100	n/a	n/a	0.0341
B1(LH)	A1&A2&B2&!C1&!C2	0.0100	n/a	n/a	-0.2331
B1(LH)	!A1&A2&B2&!C1&C2	0.0100	n/a	n/a	-0.0679
B1(LH)	!A1&A2&B2&C1&!C2	0.0100	n/a	n/a	-0.0679
B1(LH)	!A1&A2&B2&C1&C2	0.0100	n/a	n/a	-0.0679
B1(LH)	A1&!A2&B2&!C1&C2	0.0100	n/a	n/a	-0.0680
B1(LH)	A1&!A2&B2&C1&!C2	0.0100	n/a	n/a	-0.0680
B1(LH)	A1&!A2&B2&C1&C2	0.0100	n/a	n/a	-0.0679
B1(LH)	A1&A2&B2&!C1&C2	0.0100	n/a	n/a	-0.0680
B1(LH)	A1&A2&B2&C1&!C2	0.0100	n/a	n/a	-0.0680
B1(LH)	A1&A2&B2&C1&C2	0.0100	n/a	n/a	-0.0680

LEAKAGE POWER

When Condition	Power (nW)
!A1&!A2&!B1&!B2&!C1&!C2	0.2520
!A1&!A2&!B1&!B2&!C1&C2	0.2520
!A1&!A2&!B1&!B2&C1&!C2	0.2520
!A1&!A2&!B1&!B2&C1&C2	0.2520
!A1&!A2&!B1&B2&!C1&!C2	0.2527
!A1&!A2&!B1&B2&!C1&C2	0.2547
!A1&!A2&!B1&B2&C1&!C2	0.2547
!A1&!A2&!B1&B2&C1&C2	0.2547
!A1&!A2&B1&!B2&!C1&!C2	0.2527
!A1&!A2&B1&!B2&!C1&C2	0.2547
!A1&!A2&B1&!B2&C1&!C2	0.2547

continues on next page

Table 246 – continued from previous page

!A1&!A2&B1&!B2&C1&C2	0.2547
!A1&!A2&B1&B2&!C1&!C2	0.2527
!A1&!A2&B1&B2&!C1&C2	0.2547
!A1&!A2&B1&B2&C1&!C2	0.2547
!A1&!A2&B1&B2&C1&C2	0.2547
!A1&A2&!B1&!B2&!C1&!C2	0.5689
!A1&A2&!B1&!B2&!C1&C2	0.5707
!A1&A2&!B1&!B2&C1&!C2	0.5707
!A1&A2&!B1&!B2&C1&C2	0.5707
!A1&A2&!B1&B2&!C1&!C2	0.8805
!A1&A2&B1&!B2&!C1&!C2	0.8805
!A1&A2&B1&B2&!C1&!C2	0.8817
A1&!A2&!B1&!B2&!C1&!C2	0.5689
A1&!A2&!B1&!B2&!C1&C2	0.5707
A1&!A2&!B1&!B2&C1&!C2	0.5707
A1&!A2&!B1&!B2&C1&C2	0.5707
A1&!A2&!B1&B2&!C1&!C2	0.8805
A1&!A2&B1&!B2&!C1&!C2	0.8805
A1&!A2&B1&B2&!C1&!C2	0.8817
A1&A2&!B1&!B2&!C1&!C2	0.5705
A1&A2&!B1&!B2&!C1&C2	0.5723
A1&A2&!B1&!B2&C1&!C2	0.5723
A1&A2&!B1&!B2&C1&C2	0.5723
A1&A2&!B1&B2&!C1&!C2	0.8823
A1&A2&B1&!B2&!C1&!C2	0.8823
A1&A2&B1&B2&!C1&!C2	0.8837
!A1&A2&!B1&B2&!C1&C2	0.7977
!A1&A2&!B1&B2&C1&!C2	0.6559
!A1&A2&!B1&B2&C1&C2	0.6559
!A1&A2&B1&!B2&!C1&C2	0.6559
!A1&A2&B1&!B2&C1&!C2	0.5141
!A1&A2&B1&!B2&C1&C2	0.5141
!A1&A2&B1&B2&!C1&C2	0.6559
!A1&A2&B1&B2&C1&!C2	0.5141
!A1&A2&B1&B2&C1&C2	0.5141
A1&!A2&!B1&B2&!C1&C2	0.6559
A1&!A2&!B1&B2&C1&!C2	0.5141
A1&!A2&!B1&B2&C1&C2	0.5141
A1&!A2&B1&!B2&!C1&C2	0.5141
A1&!A2&B1&!B2&C1&!C2	0.3723
A1&!A2&B1&!B2&C1&C2	0.3723
A1&!A2&B1&B2&!C1&C2	0.5141
A1&!A2&B1&B2&C1&!C2	0.3723
A1&!A2&B1&B2&C1&C2	0.3723
A1&A2&!B1&B2&!C1&C2	0.6559
A1&A2&!B1&B2&C1&!C2	0.5141
A1&A2&!B1&B2&C1&C2	0.5141
A1&A2&B1&!B2&!C1&C2	0.5141
A1&A2&B1&!B2&C1&!C2	0.3723
A1&A2&B1&!B2&C1&C2	0.3723
A1&A2&B1&B2&!C1&C2	0.5141
A1&A2&B1&B2&C1&!C2	0.3723

continues on next page

Table 246 – continued from previous page

A1&A2&B1&B2&C1&C2	0.3723

gf180mcu_fd_sc_mcu9t5v0__oai31_1

gf180mcu_fd_sc_mcu9t5v0__oai31_1 symbol

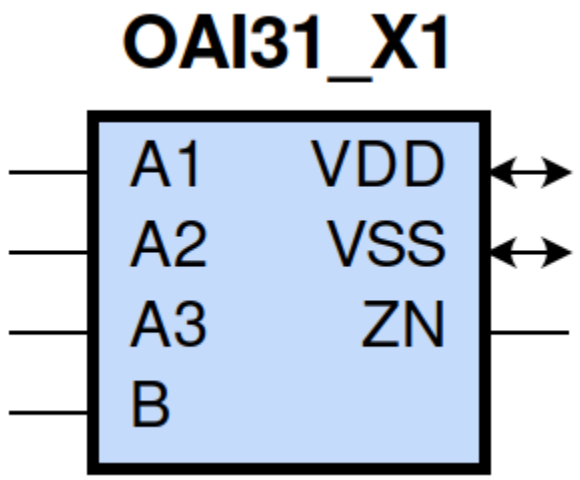

gf180mcu_fd_sc_mcu9t5v0__oai31_1 schematic

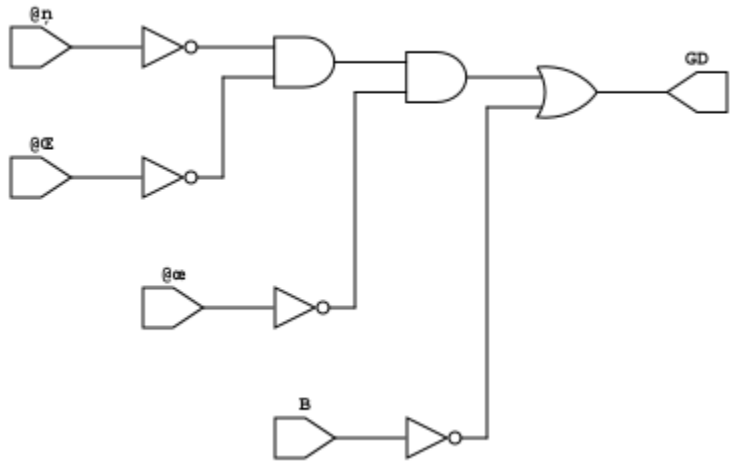

gf180mcu_fd_sc_mcu9t5v0__oai31_1 layout

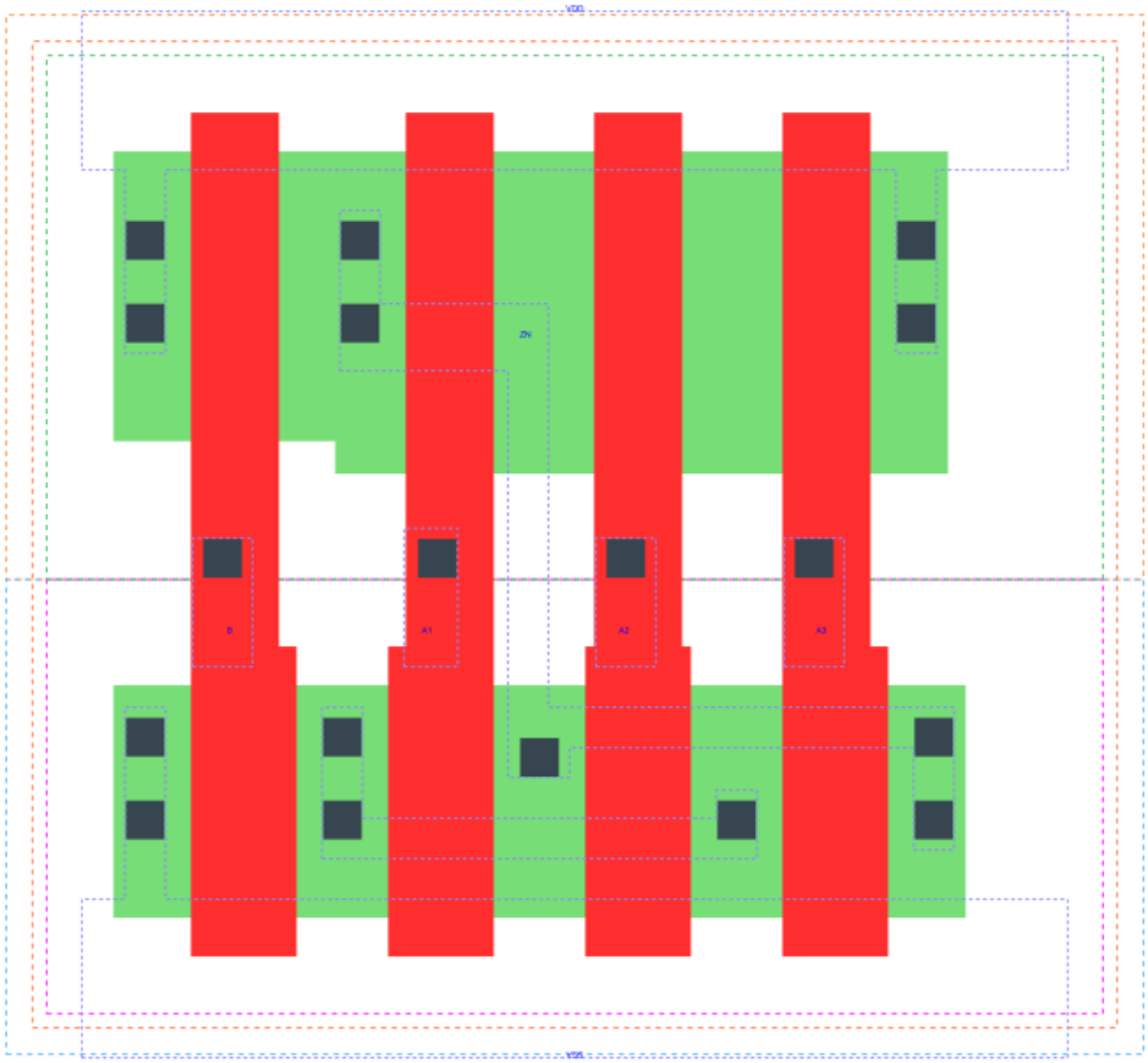

OAI31_X1 is a 3-input OR into 2-input NAND with 1X drive strength

Attributes

Attribute	Value
area	28.224000 μm^2

OUTPUT FUNCTIONS

Output Pin	Function
ZN	(((!A1)&(!A2)&(!A3))|(!B))

TRUTH TABLE FOR ZN

A1	A2	A3	B	ZN
0	0	0	?	1
?	?	?	0	1
1	?	?	1	0
?	1	?	1	0
?	?	1	1	0

FUNCTIONAL SCHEMATIC

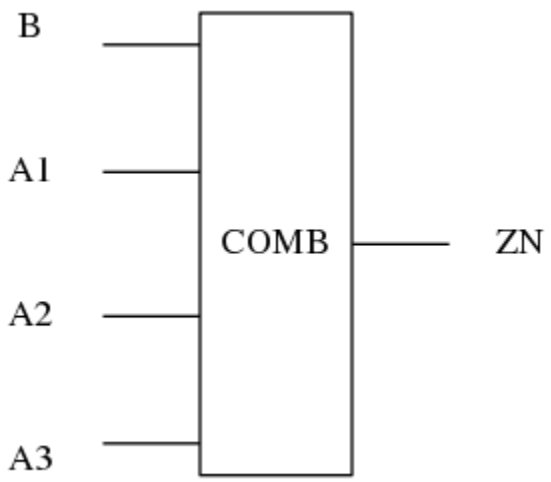

PIN CAPACITANCE (pf)

Pin	Type	Capacitance (pf)
B	input	0.0064
A1	input	0.0070
A2	input	0.0066
A3	input	0.0066

DELAY AND OUTPUT TRANSITION TIME corresponding to min slew and load

Input Pin	Output	When Condition	Tin (ns)	Out Load (pf)	Delay (ns)	Tout (ns)
B(LH)	ZN(HL)	!A1&!A2&A3	0.0100	0.0010	0.1163	0.0660
B(LH)	ZN(HL)	!A1&A2&!A3	0.0100	0.0010	0.1077	0.0550
B(LH)	ZN(HL)	!A1&A2&A3	0.0100	0.0010	0.0896	0.0488
B(LH)	ZN(HL)	A1&!A2&!A3	0.0100	0.0010	0.0859	0.0399
B(LH)	ZN(HL)	A1&!A2&A3	0.0100	0.0010	0.0738	0.0374
B(LH)	ZN(HL)	A1&A2&!A3	0.0100	0.0010	0.0738	0.0374
B(LH)	ZN(HL)	A1&A2&A3	0.0100	0.0010	0.0726	0.0428
B(HL)	ZN(LH)	!A1&!A2&A3	0.0100	0.0010	0.1201	0.1109
B(HL)	ZN(LH)	!A1&A2&!A3	0.0100	0.0010	0.1202	0.1051
B(HL)	ZN(LH)	!A1&A2&A3	0.0100	0.0010	0.1357	0.1160
B(HL)	ZN(LH)	A1&!A2&!A3	0.0100	0.0010	0.1139	0.0811
B(HL)	ZN(LH)	A1&!A2&A3	0.0100	0.0010	0.1298	0.0922
B(HL)	ZN(LH)	A1&A2&!A3	0.0100	0.0010	0.1298	0.0922
B(HL)	ZN(LH)	A1&A2&A3	0.0100	0.0010	0.1438	0.1030
A1(HL)	ZN(LH)	!A2&!A3&B	0.0100	0.0010	0.1557	0.1358
A1(LH)	ZN(HL)	!A2&!A3&B	0.0100	0.0010	0.0637	0.0395
A2(HL)	ZN(LH)	!A1&!A3&B	0.0100	0.0010	0.2116	0.1375
A2(LH)	ZN(HL)	!A1&!A3&B	0.0100	0.0010	0.0845	0.0553
A3(LH)	ZN(HL)	!A1&!A2&B	0.0100	0.0010	0.0904	0.0684
A3(HL)	ZN(LH)	!A1&!A2&B	0.0100	0.0010	0.2345	0.1376

DYNAMIC ENERGY

Input Pin	When Condition	Tin (ns)	Output	Out Load (pf)	Energy (uW/MHz)
A1	!A2&!A3&B	0.0100	ZN(LH)	0.0010	0.2121
B	!A1&!A2&A3	0.0100	ZN(HL)	0.0010	0.0850
B	!A1&A2&!A3	0.0100	ZN(HL)	0.0010	0.0484
B	!A1&A2&A3	0.0100	ZN(HL)	0.0010	0.0485
B	A1&!A2&!A3	0.0100	ZN(HL)	0.0010	0.0109
B	A1&!A2&A3	0.0100	ZN(HL)	0.0010	0.0109
B	A1&A2&!A3	0.0100	ZN(HL)	0.0010	0.0109
B	A1&A2&A3	0.0100	ZN(HL)	0.0010	0.0109
A2	!A1&!A3&B	0.0100	ZN(LH)	0.0010	0.2572
A3	!A1&!A2&B	0.0100	ZN(HL)	0.0010	0.0799
A1	!A2&!A3&B	0.0100	ZN(HL)	0.0010	0.0115
B	!A1&!A2&A3	0.0100	ZN(LH)	0.0010	0.4129
B	!A1&A2&!A3	0.0100	ZN(LH)	0.0010	0.3691
B	!A1&A2&A3	0.0100	ZN(LH)	0.0010	0.4053
B	A1&!A2&!A3	0.0100	ZN(LH)	0.0010	0.3242
B	A1&!A2&A3	0.0100	ZN(LH)	0.0010	0.3604
B	A1&A2&!A3	0.0100	ZN(LH)	0.0010	0.3604
B	A1&A2&A3	0.0100	ZN(LH)	0.0010	0.3959

continues on next page

Table 247 – continued from previous page

A2	!A1&!A3&B	0.0100	ZN(HL)	0.0010	0.0473
A3	!A1&!A2&B	0.0100	ZN(LH)	0.0010	0.3007
B(HL)	!A1&!A2&!A3	0.0100	n/a	n/a	0.0622
A3(LH)	!A1&!A2&!B	0.0100	n/a	n/a	0.0126
A3(LH)	!A1&A2&!B	0.0100	n/a	n/a	-0.0650
A3(LH)	A1&!A2&!B	0.0100	n/a	n/a	-0.0588
A3(LH)	A1&A2&!B	0.0100	n/a	n/a	-0.0636
A3(LH)	!A1&A2&B	0.0100	n/a	n/a	-0.0516
A3(LH)	A1&!A2&B	0.0100	n/a	n/a	-0.0492
A3(LH)	A1&A2&B	0.0100	n/a	n/a	-0.0563
A2(LH)	!A1&!A3&!B	0.0100	n/a	n/a	0.0125
A2(LH)	!A1&A3&!B	0.0100	n/a	n/a	-0.0653
A2(LH)	A1&!A3&!B	0.0100	n/a	n/a	-0.0652
A2(LH)	A1&A3&!B	0.0100	n/a	n/a	-0.0630
A2(LH)	!A1&A3&B	0.0100	n/a	n/a	-0.0180
A2(LH)	A1&!A3&B	0.0100	n/a	n/a	-0.0496
A2(LH)	A1&A3&B	0.0100	n/a	n/a	-0.0439
A1(LH)	!A2&!A3&!B	0.0100	n/a	n/a	0.0122
A1(LH)	!A2&A3&!B	0.0100	n/a	n/a	-0.0595
A1(LH)	A2&!A3&!B	0.0100	n/a	n/a	-0.0657
A1(LH)	A2&A3&!B	0.0100	n/a	n/a	-0.0643
A1(LH)	!A2&A3&B	0.0100	n/a	n/a	-0.0164
A1(LH)	A2&!A3&B	0.0100	n/a	n/a	-0.0169
A1(LH)	A2&A3&B	0.0100	n/a	n/a	-0.0168
A3(HL)	!A1&!A2&!B	0.0100	n/a	n/a	0.0670
A3(HL)	!A1&A2&!B	0.0100	n/a	n/a	0.0702
A3(HL)	A1&!A2&!B	0.0100	n/a	n/a	0.0701
A3(HL)	A1&A2&!B	0.0100	n/a	n/a	0.0702
A3(HL)	!A1&A2&B	0.0100	n/a	n/a	0.0596
A3(HL)	A1&!A2&B	0.0100	n/a	n/a	0.0597
A3(HL)	A1&A2&B	0.0100	n/a	n/a	0.0596
A2(HL)	!A1&!A3&!B	0.0100	n/a	n/a	0.0671
A2(HL)	!A1&A3&!B	0.0100	n/a	n/a	0.0700
A2(HL)	A1&!A3&!B	0.0100	n/a	n/a	0.0703
A2(HL)	A1&A3&!B	0.0100	n/a	n/a	0.0459
A2(HL)	!A1&A3&B	0.0100	n/a	n/a	0.0377
A2(HL)	A1&!A3&B	0.0100	n/a	n/a	0.0597
A2(HL)	A1&A3&B	0.0100	n/a	n/a	0.0351
B(LH)	!A1&!A2&!A3	0.0100	n/a	n/a	-0.0538
A1(HL)	!A2&!A3&!B	0.0100	n/a	n/a	0.0673
A1(HL)	!A2&A3&!B	0.0100	n/a	n/a	0.0703
A1(HL)	A2&!A3&!B	0.0100	n/a	n/a	0.0704
A1(HL)	A2&A3&!B	0.0100	n/a	n/a	0.0705
A1(HL)	!A2&A3&B	0.0100	n/a	n/a	0.0764
A1(HL)	A2&!A3&B	0.0100	n/a	n/a	0.0397
A1(HL)	A2&A3&B	0.0100	n/a	n/a	0.0397

LEAKAGE POWER

When Condition	Power (nW)
!A1&!A2&!A3&!B	0.1256
!A1&!A2&!A3&B	0.1267
!A1&!A2&A3&!B	0.2047
!A1&A2&!A3&!B	0.2047
!A1&A2&A3&!B	0.2051
A1&!A2&!A3&!B	0.2047
A1&!A2&A3&!B	0.2051
A1&A2&!A3&!B	0.2051
A1&A2&A3&!B	0.2053
!A1&!A2&A3&B	0.1743
!A1&A2&!A3&B	0.1391
!A1&A2&A3&B	0.1391
A1&!A2&!A3&B	0.1036
A1&!A2&A3&B	0.1036
A1&A2&!A3&B	0.1036
A1&A2&A3&B	0.1036

gf180mcu_fd_sc_mcu9t5v0__oai31_2

gf180mcu_fd_sc_mcu9t5v0__oai31_2 symbol

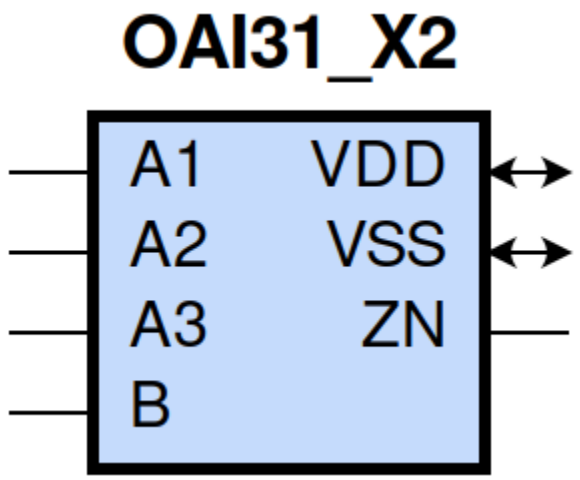

gf180mcu_fd_sc_mcu9t5v0__oai31_2 schematic

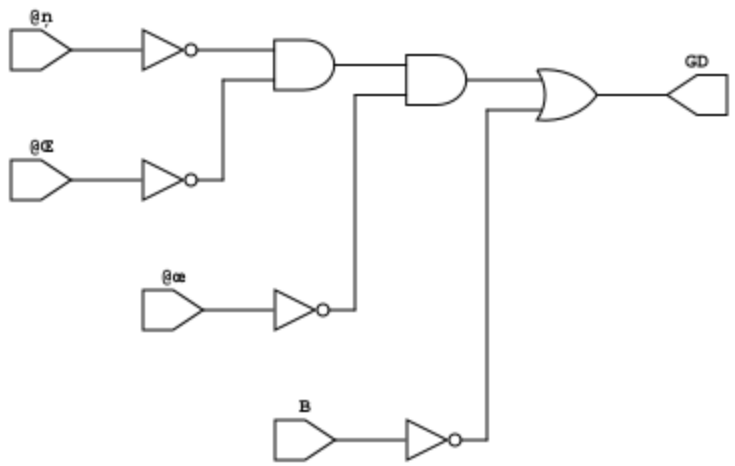

gf180mcu_fd_sc_mcu9t5v0__oai31_2 layout

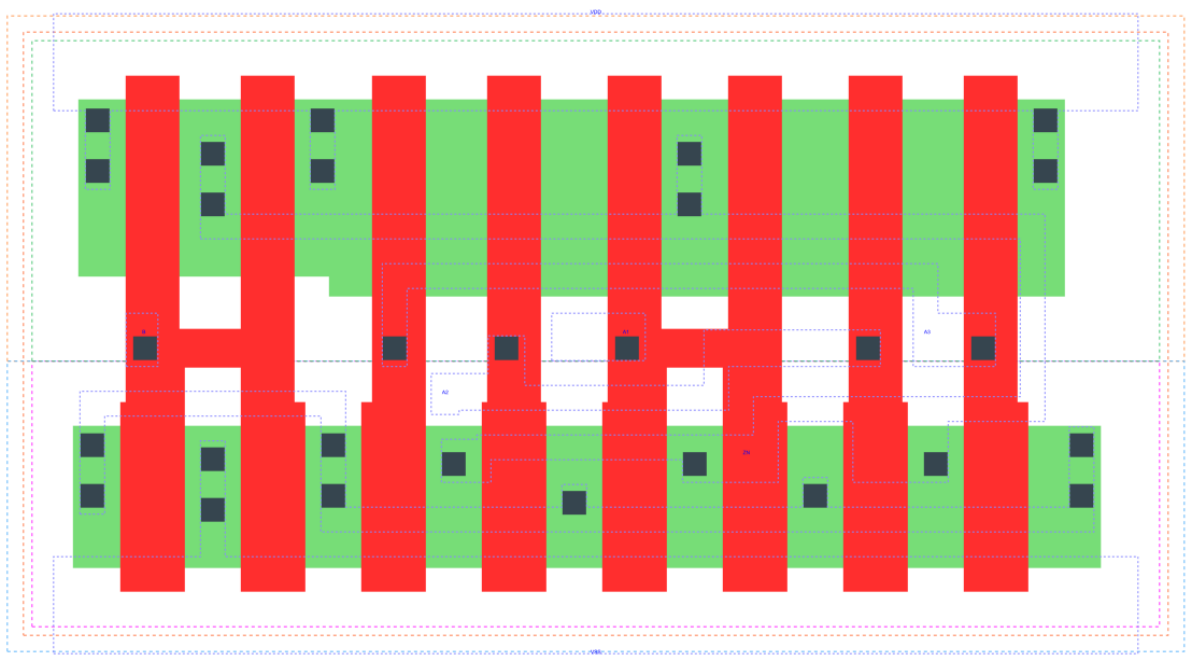

OAI31_X2 is a 3-input OR into 2-input NAND with 2X drive strength

Attributes

Attribute	Value
area	50.803200 μm^2

OUTPUT FUNCTIONS

Output Pin	Function
ZN	(((!A1)&(!A2)&(!A3))|(!B))

TRUTH TABLE FOR ZN

A1	A2	A3	B	ZN
0	0	0	?	1
?	?	?	0	1
1	?	?	1	0
?	1	?	1	0
?	?	1	1	0

FUNCTIONAL SCHEMATIC

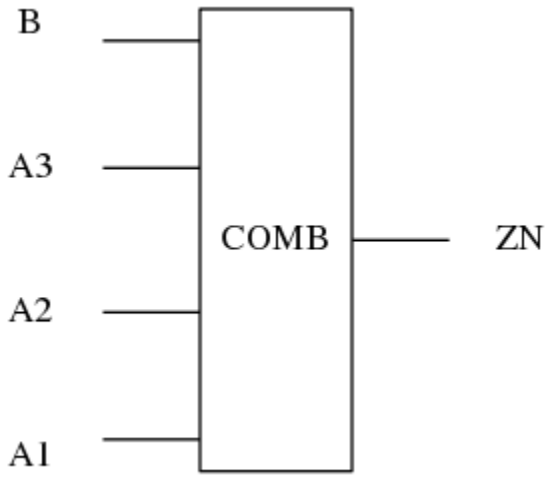

PIN CAPACITANCE (pf)

Pin	Type	Capacitance (pf)
B	input	0.0128
A3	input	0.0145
A2	input	0.0141
A1	input	0.0137

DELAY AND OUTPUT TRANSITION TIME corresponding to min slew and load

Input Pin	Output	When Condition	Tin (ns)	Out Load (pf)	Delay (ns)	Tout (ns)
B(LH)	ZN(HL)	!A1&!A2&A3	0.0100	0.0010	0.1165	0.0632
B(LH)	ZN(HL)	!A1&A2&!A3	0.0100	0.0010	0.1083	0.0525
B(LH)	ZN(HL)	!A1&A2&A3	0.0100	0.0010	0.0906	0.0477
B(LH)	ZN(HL)	A1&!A2&!A3	0.0100	0.0010	0.0865	0.0375
B(LH)	ZN(HL)	A1&!A2&A3	0.0100	0.0010	0.0746	0.0363
B(LH)	ZN(HL)	A1&A2&!A3	0.0100	0.0010	0.0747	0.0363
B(LH)	ZN(HL)	A1&A2&A3	0.0100	0.0010	0.0730	0.0422
B(HL)	ZN(LH)	!A1&!A2&A3	0.0100	0.0010	0.1217	0.1131
B(HL)	ZN(LH)	!A1&A2&!A3	0.0100	0.0010	0.1217	0.1069
B(HL)	ZN(LH)	!A1&A2&A3	0.0100	0.0010	0.1382	0.1179
B(HL)	ZN(LH)	A1&!A2&!A3	0.0100	0.0010	0.1150	0.0819
B(HL)	ZN(LH)	A1&!A2&A3	0.0100	0.0010	0.1319	0.0933
B(HL)	ZN(LH)	A1&A2&!A3	0.0100	0.0010	0.1319	0.0933
B(HL)	ZN(LH)	A1&A2&A3	0.0100	0.0010	0.1464	0.1043
A3(LH)	ZN(HL)	!A1&!A2&B	0.0100	0.0010	0.0852	0.0656
A3(HL)	ZN(LH)	!A1&!A2&B	0.0100	0.0010	0.2235	0.1288
A2(HL)	ZN(LH)	!A1&!A3&B	0.0100	0.0010	0.2008	0.1286
A2(LH)	ZN(HL)	!A1&!A3&B	0.0100	0.0010	0.0802	0.0527
A1(HL)	ZN(LH)	!A2&!A3&B	0.0100	0.0010	0.1441	0.1265
A1(LH)	ZN(HL)	!A2&!A3&B	0.0100	0.0010	0.0594	0.0366

DYNAMIC ENERGY

Input Pin	When Condition	Tin (ns)	Output	Out Load (pf)	Energy (uW/MHz)
A1	!A2&!A3&B	0.0100	ZN(LH)	0.0010	0.4250
B	!A1&!A2&A3	0.0100	ZN(HL)	0.0010	0.1626
B	!A1&A2&!A3	0.0100	ZN(HL)	0.0010	0.0893
B	!A1&A2&A3	0.0100	ZN(HL)	0.0010	0.0895
B	A1&!A2&!A3	0.0100	ZN(HL)	0.0010	0.0117
B	A1&!A2&A3	0.0100	ZN(HL)	0.0010	0.0118
B	A1&A2&!A3	0.0100	ZN(HL)	0.0010	0.0118
B	A1&A2&A3	0.0100	ZN(HL)	0.0010	0.0120
A2	!A1&!A3&B	0.0100	ZN(LH)	0.0010	0.5144
A3	!A1&!A2&B	0.0100	ZN(HL)	0.0010	0.1527

continues on next page

Table 248 – continued from previous page

A1	!A2&!A3&B	0.0100	ZN(HL)	0.0010	0.0130
B	!A1&!A2&A3	0.0100	ZN(LH)	0.0010	0.8692
B	!A1&A2&!A3	0.0100	ZN(LH)	0.0010	0.7815
B	!A1&A2&A3	0.0100	ZN(LH)	0.0010	0.8535
B	A1&!A2&!A3	0.0100	ZN(LH)	0.0010	0.6922
B	A1&!A2&A3	0.0100	ZN(LH)	0.0010	0.7643
B	A1&A2&!A3	0.0100	ZN(LH)	0.0010	0.7643
B	A1&A2&A3	0.0100	ZN(LH)	0.0010	0.8357
A2	!A1&!A3&B	0.0100	ZN(HL)	0.0010	0.0875
A3	!A1&!A2&B	0.0100	ZN(LH)	0.0010	0.6013
B(HL)	!A1&!A2&!A3	0.0100	n/a	n/a	0.1231
A3(LH)	!A1&!A2&!B	0.0100	n/a	n/a	0.0652
A3(LH)	!A1&A2&!B	0.0100	n/a	n/a	-0.1299
A3(LH)	A1&!A2&!B	0.0100	n/a	n/a	-0.1176
A3(LH)	A1&A2&!B	0.0100	n/a	n/a	-0.1274
A3(LH)	!A1&A2&B	0.0100	n/a	n/a	-0.1033
A3(LH)	A1&!A2&B	0.0100	n/a	n/a	-0.0987
A3(LH)	A1&A2&B	0.0100	n/a	n/a	-0.1127
A2(LH)	!A1&!A3&!B	0.0100	n/a	n/a	0.0649
A2(LH)	!A1&A3&!B	0.0100	n/a	n/a	-0.1306
A2(LH)	A1&!A3&!B	0.0100	n/a	n/a	-0.1306
A2(LH)	A1&A3&!B	0.0100	n/a	n/a	-0.1263
A2(LH)	!A1&A3&B	0.0100	n/a	n/a	-0.0360
A2(LH)	A1&!A3&B	0.0100	n/a	n/a	-0.0991
A2(LH)	A1&A3&B	0.0100	n/a	n/a	-0.0878
A1(LH)	!A2&!A3&!B	0.0100	n/a	n/a	0.0644
A1(LH)	!A2&A3&!B	0.0100	n/a	n/a	-0.1188
A1(LH)	A2&!A3&!B	0.0100	n/a	n/a	-0.1314
A1(LH)	A2&A3&!B	0.0100	n/a	n/a	-0.1286
A1(LH)	!A2&A3&B	0.0100	n/a	n/a	-0.0329
A1(LH)	A2&!A3&B	0.0100	n/a	n/a	-0.0339
A1(LH)	A2&A3&B	0.0100	n/a	n/a	-0.0339
A3(HL)	!A1&!A2&!B	0.0100	n/a	n/a	0.1340
A3(HL)	!A1&A2&!B	0.0100	n/a	n/a	0.1381
A3(HL)	A1&!A2&!B	0.0100	n/a	n/a	0.1379
A3(HL)	A1&A2&!B	0.0100	n/a	n/a	0.1382
A3(HL)	!A1&A2&B	0.0100	n/a	n/a	0.1189
A3(HL)	A1&!A2&B	0.0100	n/a	n/a	0.1189
A3(HL)	A1&A2&B	0.0100	n/a	n/a	0.1189
A2(HL)	!A1&!A3&!B	0.0100	n/a	n/a	0.1339
A2(HL)	!A1&A3&!B	0.0100	n/a	n/a	0.1372
A2(HL)	A1&!A3&!B	0.0100	n/a	n/a	0.1381
A2(HL)	A1&A3&!B	0.0100	n/a	n/a	0.0900
A2(HL)	!A1&A3&B	0.0100	n/a	n/a	0.0752
A2(HL)	A1&!A3&B	0.0100	n/a	n/a	0.1192
A2(HL)	A1&A3&B	0.0100	n/a	n/a	0.0707
B(LH)	!A1&!A2&!A3	0.0100	n/a	n/a	-0.1073
A1(HL)	!A2&!A3&!B	0.0100	n/a	n/a	0.1343
A1(HL)	!A2&A3&!B	0.0100	n/a	n/a	0.1381
A1(HL)	A2&!A3&!B	0.0100	n/a	n/a	0.1380
A1(HL)	A2&A3&!B	0.0100	n/a	n/a	0.1381
A1(HL)	!A2&A3&B	0.0100	n/a	n/a	0.1551

continues on next page

Table 248 – continued from previous page

A1(HL)	A2&!A3&B	0.0100	n/a	n/a	0.0818
A1(HL)	A2&A3&B	0.0100	n/a	n/a	0.0819

LEAKAGE POWER

When Condition	Power (nW)
!A1&!A2&!A3&!B	0.2012
!A1&!A2&!A3&B	0.2035
!A1&!A2&A3&!B	0.3594
!A1&A2&!A3&!B	0.3594
!A1&A2&A3&!B	0.3601
A1&!A2&!A3&!B	0.3594
A1&!A2&A3&!B	0.3601
A1&A2&!A3&!B	0.3601
A1&A2&A3&!B	0.3606
!A1&!A2&A3&B	0.2987
!A1&A2&!A3&B	0.2281
!A1&A2&A3&B	0.2281
A1&!A2&!A3&B	0.1572
A1&!A2&A3&B	0.1572
A1&A2&!A3&B	0.1572
A1&A2&A3&B	0.1572

gf180mcu_fd_sc_mcu9t5v0__oai31_4

gf180mcu_fd_sc_mcu9t5v0__oai31_4 symbol

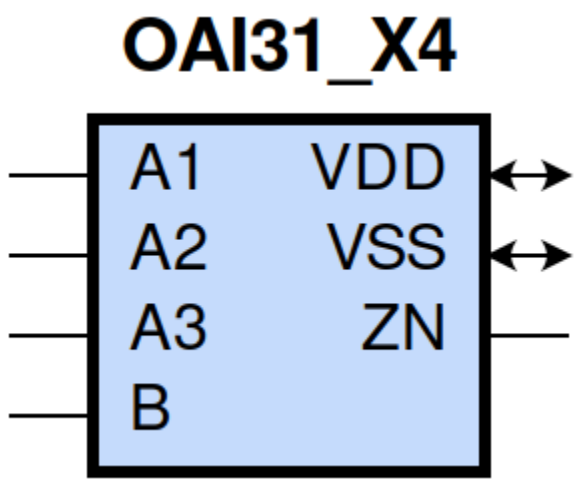

gf180mcu_fd_sc_mcu9t5v0__oai31_4 schematic

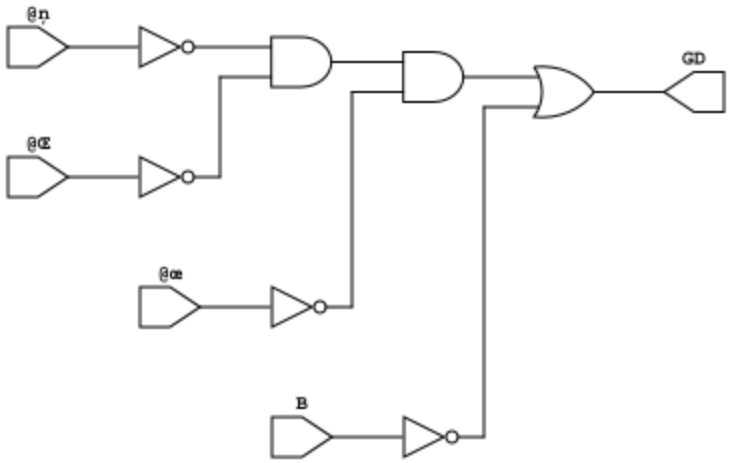

gf180mcu_fd_sc_mcu9t5v0__oai31_4 layout

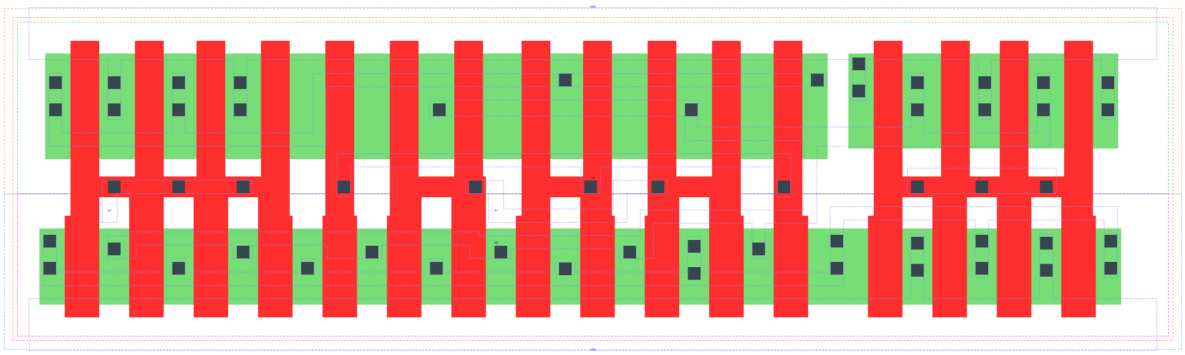

OAI31_X4 is a 3-input OR into 2-input NAND with 4X drive strength

Attributes

Attribute	Value
area	98.784000 μm^2

OUTPUT FUNCTIONS

Output Pin	Function
ZN	(((!A1)&(!A2)&(!A3))|(!B))

TRUTH TABLE FOR ZN

A1	A2	A3	B	ZN
0	0	0	?	1
?	?	?	0	1
1	?	?	1	0
?	1	?	1	0
?	?	1	1	0

FUNCTIONAL SCHEMATIC

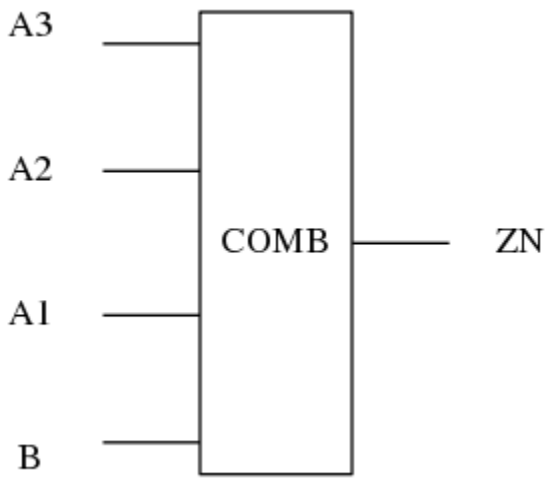

PIN CAPACITANCE (pf)

Pin	Type	Capacitance (pf)
A3	input	0.0261
A2	input	0.0274
A1	input	0.0277
B	input	0.0257

DELAY AND OUTPUT TRANSITION TIME corresponding to min slew and load

Input Pin	Output	When Condition	Tin (ns)	Out Load (pf)	Delay (ns)	Tout (ns)
A3(LH)	ZN(HL)	!A1&!A2&B	0.0100	0.0010	0.0822	0.0647
A3(HL)	ZN(LH)	!A1&!A2&B	0.0100	0.0010	0.2212	0.1213
A2(HL)	ZN(LH)	!A1&!A3&B	0.0100	0.0010	0.1891	0.1208
A2(LH)	ZN(HL)	!A1&!A3&B	0.0100	0.0010	0.0766	0.0498
A1(HL)	ZN(LH)	!A2&!A3&B	0.0100	0.0010	0.1326	0.1176
A1(LH)	ZN(HL)	!A2&!A3&B	0.0100	0.0010	0.0563	0.0338
B(LH)	ZN(HL)	!A1&!A2&A3	0.0100	0.0010	0.1126	0.0621
B(LH)	ZN(HL)	!A1&A2&!A3	0.0100	0.0010	0.1040	0.0496
B(LH)	ZN(HL)	!A1&A2&A3	0.0100	0.0010	0.0872	0.0454
B(LH)	ZN(HL)	A1&!A2&!A3	0.0100	0.0010	0.0824	0.0347
B(LH)	ZN(HL)	A1&!A2&A3	0.0100	0.0010	0.0715	0.0341
B(LH)	ZN(HL)	A1&A2&!A3	0.0100	0.0010	0.0714	0.0340
B(LH)	ZN(HL)	A1&A2&A3	0.0100	0.0010	0.0700	0.0401
B(HL)	ZN(LH)	!A1&!A2&A3	0.0100	0.0010	0.1159	0.1079
B(HL)	ZN(LH)	!A1&A2&!A3	0.0100	0.0010	0.1160	0.1020
B(HL)	ZN(LH)	!A1&A2&A3	0.0100	0.0010	0.1325	0.1129
B(HL)	ZN(LH)	A1&!A2&!A3	0.0100	0.0010	0.1094	0.0770
B(HL)	ZN(LH)	A1&!A2&A3	0.0100	0.0010	0.1263	0.0886
B(HL)	ZN(LH)	A1&A2&!A3	0.0100	0.0010	0.1263	0.0885
B(HL)	ZN(LH)	A1&A2&A3	0.0100	0.0010	0.1408	0.0996

DYNAMIC ENERGY

Input Pin	When Condition	Tin (ns)	Output	Out Load (pf)	Energy (uW/MHz)
A1	!A2&!A3&B	0.0100	ZN(LH)	0.0010	0.8089
B	!A1&!A2&A3	0.0100	ZN(HL)	0.0010	0.3455
B	!A1&A2&!A3	0.0100	ZN(HL)	0.0010	0.1827
B	!A1&A2&A3	0.0100	ZN(HL)	0.0010	0.1833
B	A1&!A2&!A3	0.0100	ZN(HL)	0.0010	0.0273
B	A1&!A2&A3	0.0100	ZN(HL)	0.0010	0.0277
B	A1&A2&!A3	0.0100	ZN(HL)	0.0010	0.0275
B	A1&A2&A3	0.0100	ZN(HL)	0.0010	0.0282
A2	!A1&!A3&B	0.0100	ZN(LH)	0.0010	0.9872
A3	!A1&!A2&B	0.0100	ZN(HL)	0.0010	0.3287
A1	!A2&!A3&B	0.0100	ZN(HL)	0.0010	0.0291
B	!A1&!A2&A3	0.0100	ZN(LH)	0.0010	1.7506
B	!A1&A2&!A3	0.0100	ZN(LH)	0.0010	1.5071
B	!A1&A2&A3	0.0100	ZN(LH)	0.0010	1.6509
B	A1&!A2&!A3	0.0100	ZN(LH)	0.0010	1.3286
B	A1&!A2&A3	0.0100	ZN(LH)	0.0010	1.4721
B	A1&A2&!A3	0.0100	ZN(LH)	0.0010	1.4721
B	A1&A2&A3	0.0100	ZN(LH)	0.0010	1.6153
A2	!A1&!A3&B	0.0100	ZN(HL)	0.0010	0.1779
A3	!A1&!A2&B	0.0100	ZN(LH)	0.0010	1.2290
B(HL)	!A1&!A2&!A3	0.0100	n/a	n/a	0.2466
A3(LH)	!A1&!A2&!B	0.0100	n/a	n/a	0.1140

continues on next page

Table 249 – continued from previous page

A3(LH)	!A1&A2&!B	0.0100	n/a	n/a	-0.2513
A3(LH)	A1&!A2&!B	0.0100	n/a	n/a	-0.2283
A3(LH)	A1&A2&!B	0.0100	n/a	n/a	-0.2463
A3(LH)	!A1&A2&B	0.0100	n/a	n/a	-0.1985
A3(LH)	A1&!A2&B	0.0100	n/a	n/a	-0.1949
A3(LH)	A1&A2&B	0.0100	n/a	n/a	-0.2168
A2(LH)	!A1&!A3&!B	0.0100	n/a	n/a	0.1137
A2(LH)	!A1&A3&!B	0.0100	n/a	n/a	-0.2520
A2(LH)	A1&!A3&!B	0.0100	n/a	n/a	-0.2610
A2(LH)	A1&A3&!B	0.0100	n/a	n/a	-0.2434
A2(LH)	!A1&A3&B	0.0100	n/a	n/a	-0.0669
A2(LH)	A1&!A3&B	0.0100	n/a	n/a	-0.1984
A2(LH)	A1&A3&B	0.0100	n/a	n/a	-0.1652
A1(LH)	!A2&!A3&!B	0.0100	n/a	n/a	0.1129
A1(LH)	!A2&A3&!B	0.0100	n/a	n/a	-0.2291
A1(LH)	A2&!A3&!B	0.0100	n/a	n/a	-0.2626
A1(LH)	A2&A3&!B	0.0100	n/a	n/a	-0.2537
A1(LH)	!A2&A3&B	0.0100	n/a	n/a	-0.0634
A1(LH)	A2&!A3&B	0.0100	n/a	n/a	-0.0677
A1(LH)	A2&A3&B	0.0100	n/a	n/a	-0.0676
A3(HL)	!A1&!A2&!B	0.0100	n/a	n/a	0.2678
A3(HL)	!A1&A2&!B	0.0100	n/a	n/a	0.2764
A3(HL)	A1&!A2&!B	0.0100	n/a	n/a	0.2763
A3(HL)	A1&A2&!B	0.0100	n/a	n/a	0.2767
A3(HL)	!A1&A2&B	0.0100	n/a	n/a	0.2380
A3(HL)	A1&!A2&B	0.0100	n/a	n/a	0.2380
A3(HL)	A1&A2&B	0.0100	n/a	n/a	0.2380
A2(HL)	!A1&!A3&!B	0.0100	n/a	n/a	0.2677
A2(HL)	!A1&A3&!B	0.0100	n/a	n/a	0.2755
A2(HL)	A1&!A3&!B	0.0100	n/a	n/a	0.2767
A2(HL)	A1&A3&!B	0.0100	n/a	n/a	0.1709
A2(HL)	!A1&A3&B	0.0100	n/a	n/a	0.1675
A2(HL)	A1&!A3&B	0.0100	n/a	n/a	0.2385
A2(HL)	A1&A3&B	0.0100	n/a	n/a	0.1320
B(LH)	!A1&!A2&!A3	0.0100	n/a	n/a	-0.2141
A1(HL)	!A2&!A3&!B	0.0100	n/a	n/a	0.2683
A1(HL)	!A2&A3&!B	0.0100	n/a	n/a	0.2767
A1(HL)	A2&!A3&!B	0.0100	n/a	n/a	0.2768
A1(HL)	A2&A3&!B	0.0100	n/a	n/a	0.2771
A1(HL)	!A2&A3&B	0.0100	n/a	n/a	0.3271
A1(HL)	A2&!A3&B	0.0100	n/a	n/a	0.1636
A1(HL)	A2&A3&B	0.0100	n/a	n/a	0.1637

LEAKAGE POWER

When Condition	Power (nW)
!A1&!A2&!A3&!B	0.3524
!A1&!A2&!A3&B	0.3570
!A1&!A2&A3&!B	0.6683
!A1&A2&!A3&!B	0.6683
!A1&A2&A3&!B	0.6696
A1&!A2&!A3&!B	0.6683
A1&!A2&A3&!B	0.6696
A1&A2&!A3&!B	0.6698
A1&A2&A3&!B	0.6706
!A1&!A2&A3&B	0.5474
!A1&A2&!A3&B	0.4062
!A1&A2&A3&B	0.4060
A1&!A2&!A3&B	0.2644
A1&!A2&A3&B	0.2642
A1&A2&!A3&B	0.2644
A1&A2&A3&B	0.2642

gf180mcu_fd_sc_mcu9t5v0__oai32_1

gf180mcu_fd_sc_mcu9t5v0__oai32_1 symbol

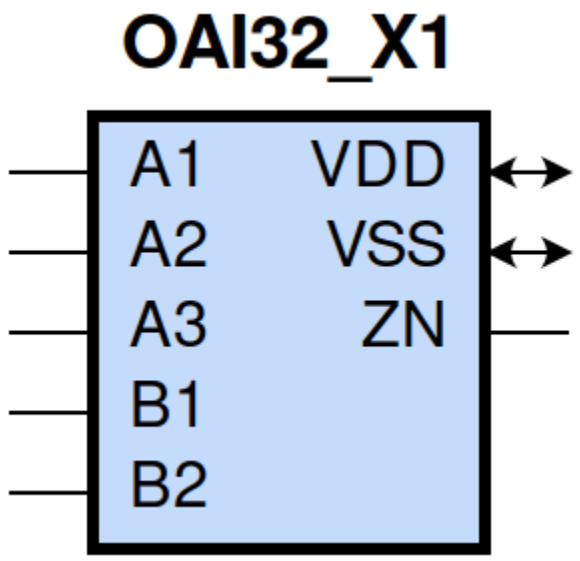

gf180mcu_fd_sc_mcu9t5v0__oai32_1 schematic

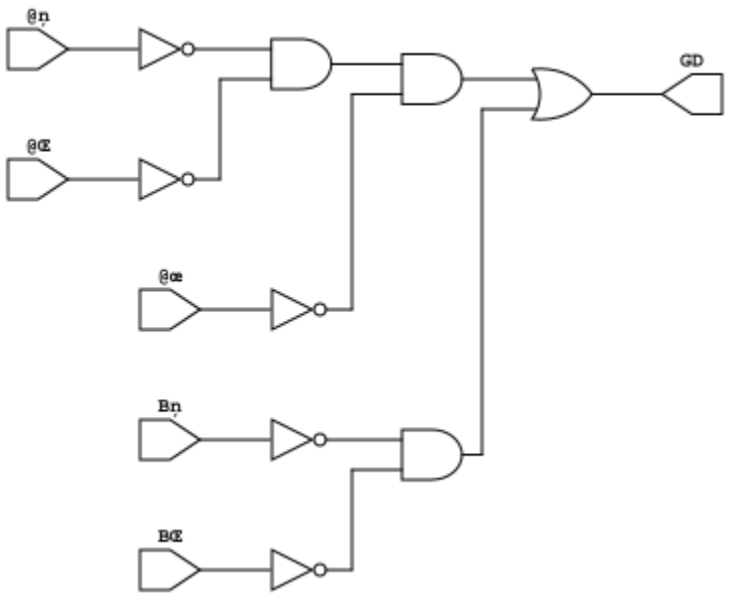

gf180mcu_fd_sc_mcu9t5v0__oai32_1 layout

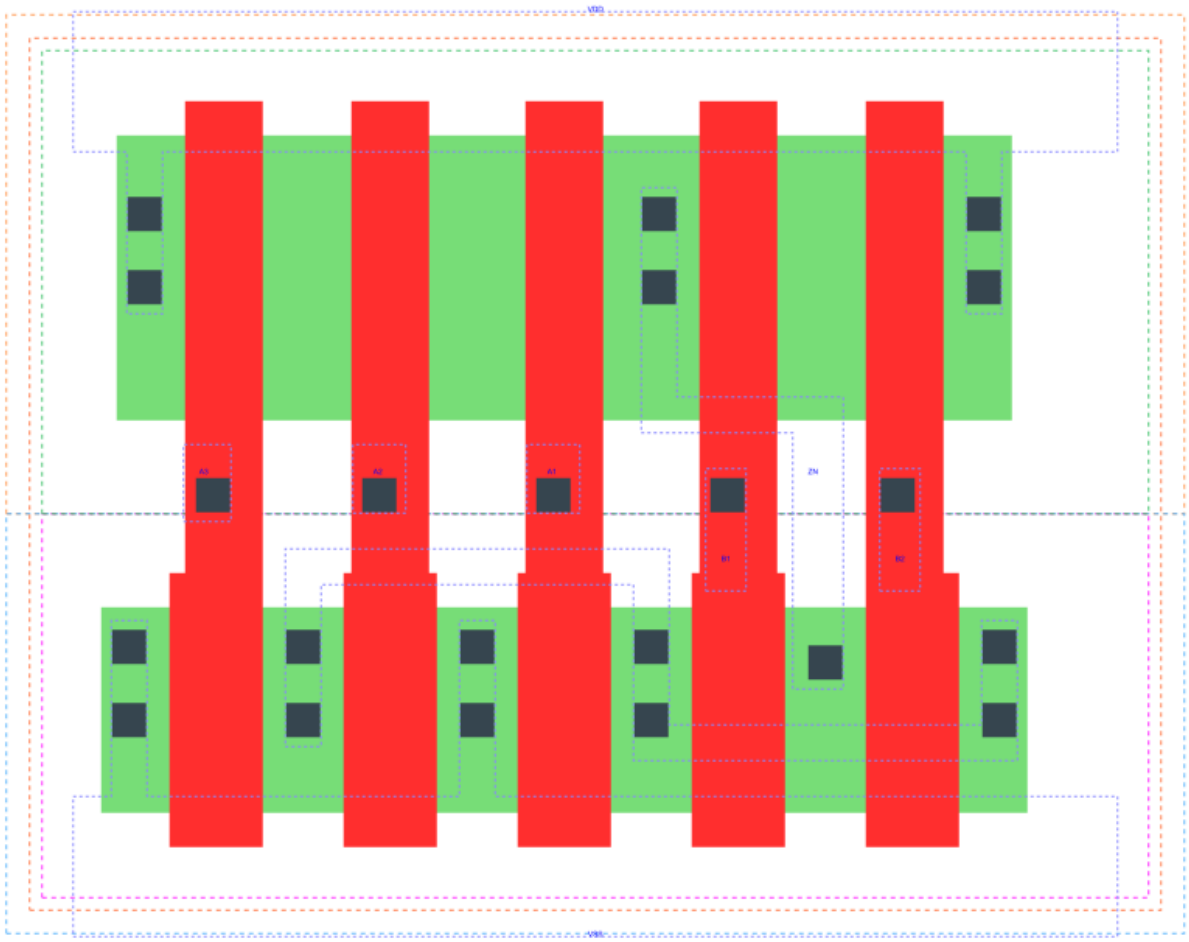

OAI32_X1 is a two 3-input OR, 2-input OR into 2-input NAND with 1X drive strength

Attributes

Attribute	Value
area	33.868800 μm^2

OUTPUT FUNCTIONS

Output Pin	Function
ZN	(((!A1)&(!A2)&(!A3))|((!B1)&(!B2)))

TRUTH TABLE FOR ZN

A1	A2	A3	B1	B2	ZN
0	0	0	?	?	1
?	?	?	0	0	1
1	?	?	1	?	0
1	?	?	?	1	0
?	1	?	1	?	0
?	1	?	?	1	0
?	?	1	1	?	0
?	?	1	?	1	0

FUNCTIONAL SCHEMATIC

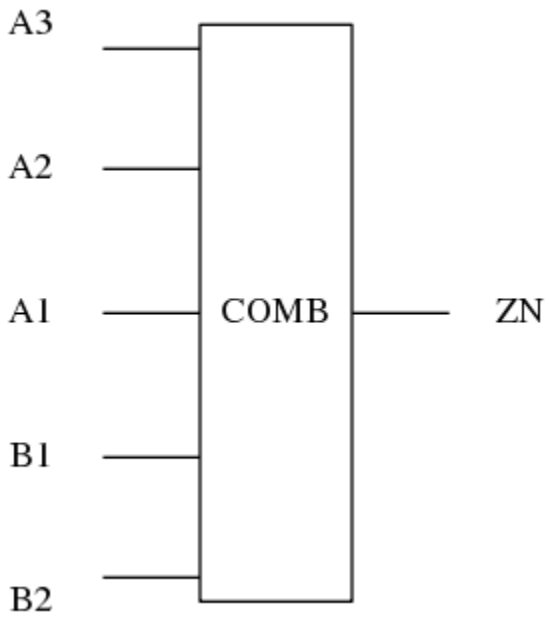

PIN CAPACITANCE (pf)

Pin	Type	Capacitance (pf)
A3	input	0.0064
A2	input	0.0065
A1	input	0.0068
B1	input	0.0070
B2	input	0.0066

DELAY AND OUTPUT TRANSITION TIME corresponding to min slew and load

Input Pin	Output	When Condition	Tin (ns)	Out Load (pf)	Delay (ns)	Tout (ns)
A3(LH)	ZN(HL)	!A1&!A2&!B1&B2	0.0100	0.0010	0.1399	0.0731
A3(LH)	ZN(HL)	!A1&!A2&B1&!B2	0.0100	0.0010	0.1124	0.0574
A3(LH)	ZN(HL)	!A1&!A2&B1&B2	0.0100	0.0010	0.0921	0.0528
A3(HL)	ZN(LH)	!A1&!A2&!B1&B2	0.0100	0.0010	0.3529	0.2798
A3(HL)	ZN(LH)	!A1&!A2&B1&!B2	0.0100	0.0010	0.3330	0.2152
A3(HL)	ZN(LH)	!A1&!A2&B1&B2	0.0100	0.0010	0.3687	0.2424
A2(HL)	ZN(LH)	!A1&!A3&!B1&B2	0.0100	0.0010	0.3298	0.2798
A2(HL)	ZN(LH)	!A1&!A3&B1&!B2	0.0100	0.0010	0.3099	0.2156
A2(HL)	ZN(LH)	!A1&!A3&B1&B2	0.0100	0.0010	0.3456	0.2423
A2(LH)	ZN(HL)	!A1&!A3&!B1&B2	0.0100	0.0010	0.1310	0.0613

continues on next page

Table 250 – continued from previous page

A2(LH)	ZN(HL)	!A1&!A3&B1&!B2	0.0100	0.0010	0.1071	0.0467
A2(LH)	ZN(HL)	!A1&!A3&B1&B2	0.0100	0.0010	0.0899	0.0442
A1(HL)	ZN(LH)	!A2&!A3&!B1&B2	0.0100	0.0010	0.2732	0.2794
A1(HL)	ZN(LH)	!A2&!A3&B1&!B2	0.0100	0.0010	0.2533	0.2149
A1(HL)	ZN(LH)	!A2&!A3&B1&B2	0.0100	0.0010	0.2892	0.2422
A1(LH)	ZN(HL)	!A2&!A3&!B1&B2	0.0100	0.0010	0.1075	0.0463
A1(LH)	ZN(HL)	!A2&!A3&B1&!B2	0.0100	0.0010	0.0860	0.0323
A1(LH)	ZN(HL)	!A2&!A3&B1&B2	0.0100	0.0010	0.0744	0.0329
B1(HL)	ZN(LH)	!A1&!A2&A3&!B2	0.0100	0.0010	0.1025	0.1226
B1(HL)	ZN(LH)	!A1&A2&!A3&!B2	0.0100	0.0010	0.1024	0.1080
B1(HL)	ZN(LH)	!A1&A2&A3&!B2	0.0100	0.0010	0.1014	0.1078
B1(HL)	ZN(LH)	A1&!A2&!A3&!B2	0.0100	0.0010	0.0942	0.0694
B1(HL)	ZN(LH)	A1&!A2&A3&!B2	0.0100	0.0010	0.0933	0.0693
B1(HL)	ZN(LH)	A1&A2&!A3&!B2	0.0100	0.0010	0.0933	0.0693
B1(HL)	ZN(LH)	A1&A2&A3&!B2	0.0100	0.0010	0.0927	0.0693
B1(LH)	ZN(HL)	!A1&!A2&A3&!B2	0.0100	0.0010	0.0801	0.0565
B1(LH)	ZN(HL)	!A1&A2&!A3&!B2	0.0100	0.0010	0.0730	0.0460
B1(LH)	ZN(HL)	!A1&A2&A3&!B2	0.0100	0.0010	0.0621	0.0354
B1(LH)	ZN(HL)	A1&!A2&!A3&!B2	0.0100	0.0010	0.0520	0.0306
B1(LH)	ZN(HL)	A1&!A2&A3&!B2	0.0100	0.0010	0.0459	0.0240
B1(LH)	ZN(HL)	A1&A2&!A3&!B2	0.0100	0.0010	0.0459	0.0240
B1(LH)	ZN(HL)	A1&A2&A3&!B2	0.0100	0.0010	0.0438	0.0223
B2(HL)	ZN(LH)	!A1&!A2&A3&!B1	0.0100	0.0010	0.1265	0.1229
B2(HL)	ZN(LH)	!A1&A2&!A3&!B1	0.0100	0.0010	0.1265	0.1084
B2(HL)	ZN(LH)	!A1&A2&A3&!B1	0.0100	0.0010	0.1256	0.1084
B2(HL)	ZN(LH)	A1&!A2&!A3&!B1	0.0100	0.0010	0.1182	0.0698
B2(HL)	ZN(LH)	A1&!A2&A3&!B1	0.0100	0.0010	0.1173	0.0698
B2(HL)	ZN(LH)	A1&A2&!A3&!B1	0.0100	0.0010	0.1173	0.0698
B2(HL)	ZN(LH)	A1&A2&A3&!B1	0.0100	0.0010	0.1167	0.0698
B2(LH)	ZN(HL)	!A1&!A2&A3&!B1	0.0100	0.0010	0.1056	0.0728
B2(LH)	ZN(HL)	!A1&A2&!A3&!B1	0.0100	0.0010	0.0946	0.0614
B2(LH)	ZN(HL)	!A1&A2&A3&!B1	0.0100	0.0010	0.0790	0.0472
B2(LH)	ZN(HL)	A1&!A2&!A3&!B1	0.0100	0.0010	0.0705	0.0463
B2(LH)	ZN(HL)	A1&!A2&A3&!B1	0.0100	0.0010	0.0600	0.0358
B2(LH)	ZN(HL)	A1&A2&!A3&!B1	0.0100	0.0010	0.0600	0.0358
B2(LH)	ZN(HL)	A1&A2&A3&!B1	0.0100	0.0010	0.0566	0.0329

DYNAMIC ENERGY

Input Pin	When Condition	Tin (ns)	Output	Out Load (pf)	Energy (uW/MHz)
A1	!A2&!A3&!B1&B2	0.0100	ZN(LH)	0.0010	0.3694
A1	!A2&!A3&B1&!B2	0.0100	ZN(LH)	0.0010	0.3253
A1	!A2&!A3&B1&B2	0.0100	ZN(LH)	0.0010	0.3614
B2	!A1&!A2&A3&!B1	0.0100	ZN(LH)	0.0010	0.2968
B2	!A1&A2&!A3&!B1	0.0100	ZN(LH)	0.0010	0.2534
B2	!A1&A2&A3&!B1	0.0100	ZN(LH)	0.0010	0.2523
B2	A1&!A2&!A3&!B1	0.0100	ZN(LH)	0.0010	0.2090

continues on next page

Table 251 – continued from previous page

B2	A1&!A2&A3&!B1	0.0100	ZN(LH)	0.0010	0.2079
B2	A1&A2&!A3&!B1	0.0100	ZN(LH)	0.0010	0.2079
B2	A1&A2&A3&!B1	0.0100	ZN(LH)	0.0010	0.2074
B1	!A1&!A2&A3&!B2	0.0100	ZN(LH)	0.0010	0.2524
B1	!A1&A2&!A3&!B2	0.0100	ZN(LH)	0.0010	0.2088
B1	!A1&A2&A3&!B2	0.0100	ZN(LH)	0.0010	0.2077
B1	A1&!A2&!A3&!B2	0.0100	ZN(LH)	0.0010	0.1645
B1	A1&!A2&A3&!B2	0.0100	ZN(LH)	0.0010	0.1633
B1	A1&A2&!A3&!B2	0.0100	ZN(LH)	0.0010	0.1633
B1	A1&A2&A3&!B2	0.0100	ZN(LH)	0.0010	0.1626
A2	!A1&!A3&!B1&B2	0.0100	ZN(LH)	0.0010	0.4141
A2	!A1&!A3&B1&!B2	0.0100	ZN(LH)	0.0010	0.3699
A2	!A1&!A3&B1&B2	0.0100	ZN(LH)	0.0010	0.4057
B1	!A1&!A2&A3&!B2	0.0100	ZN(HL)	0.0010	0.0840
B1	!A1&A2&!A3&!B2	0.0100	ZN(HL)	0.0010	0.0475
B1	!A1&A2&A3&!B2	0.0100	ZN(HL)	0.0010	0.0475
B1	A1&!A2&!A3&!B2	0.0100	ZN(HL)	0.0010	0.0082
B1	A1&!A2&A3&!B2	0.0100	ZN(HL)	0.0010	0.0083
B1	A1&A2&!A3&!B2	0.0100	ZN(HL)	0.0010	0.0083
B1	A1&A2&A3&!B2	0.0100	ZN(HL)	0.0010	0.0082
A3	!A1&!A2&!B1&B2	0.0100	ZN(HL)	0.0010	0.1155
A3	!A1&!A2&B1&!B2	0.0100	ZN(HL)	0.0010	0.0787
A3	!A1&!A2&B1&B2	0.0100	ZN(HL)	0.0010	0.0786
A1	!A2&!A3&!B1&B2	0.0100	ZN(HL)	0.0010	0.0464
A1	!A2&!A3&B1&!B2	0.0100	ZN(HL)	0.0010	0.0079
A1	!A2&!A3&B1&B2	0.0100	ZN(HL)	0.0010	0.0082
B2	!A1&!A2&A3&!B1	0.0100	ZN(HL)	0.0010	0.1162
B2	!A1&A2&!A3&!B1	0.0100	ZN(HL)	0.0010	0.0797
B2	!A1&A2&A3&!B1	0.0100	ZN(HL)	0.0010	0.0799
B2	A1&!A2&!A3&!B1	0.0100	ZN(HL)	0.0010	0.0414
B2	A1&!A2&A3&!B1	0.0100	ZN(HL)	0.0010	0.0415
B2	A1&A2&!A3&!B1	0.0100	ZN(HL)	0.0010	0.0414
B2	A1&A2&A3&!B1	0.0100	ZN(HL)	0.0010	0.0413
A2	!A1&!A3&!B1&B2	0.0100	ZN(HL)	0.0010	0.0829
A2	!A1&!A3&B1&!B2	0.0100	ZN(HL)	0.0010	0.0460
A2	!A1&!A3&B1&B2	0.0100	ZN(HL)	0.0010	0.0459
A3	!A1&!A2&!B1&B2	0.0100	ZN(LH)	0.0010	0.4576
A3	!A1&!A2&B1&!B2	0.0100	ZN(LH)	0.0010	0.4133
A3	!A1&!A2&B1&B2	0.0100	ZN(LH)	0.0010	0.4493
A3(LH)	!A1&!A2&!B1&!B2	0.0100	n/a	n/a	-0.0595
A3(LH)	!A1&A2&!B1&!B2	0.0100	n/a	n/a	-0.0577
A3(LH)	A1&!A2&!B1&!B2	0.0100	n/a	n/a	-0.0514
A3(LH)	A1&A2&!B1&!B2	0.0100	n/a	n/a	-0.0564
A3(LH)	!A1&A2&!B1&B2	0.0100	n/a	n/a	-0.0517
A3(LH)	!A1&A2&B1&!B2	0.0100	n/a	n/a	-0.0517
A3(LH)	!A1&A2&B1&B2	0.0100	n/a	n/a	-0.0517
A3(LH)	A1&!A2&!B1&B2	0.0100	n/a	n/a	-0.0494
A3(LH)	A1&!A2&B1&!B2	0.0100	n/a	n/a	-0.0494
A3(LH)	A1&!A2&B1&B2	0.0100	n/a	n/a	-0.0494
A3(LH)	A1&A2&!B1&B2	0.0100	n/a	n/a	-0.0564
A3(LH)	A1&A2&B1&!B2	0.0100	n/a	n/a	-0.0564
A3(LH)	A1&A2&B1&B2	0.0100	n/a	n/a	-0.0564

continues on next page

Table 251 – continued from previous page

A1(LH)	!A2&!A3&!B1&!B2	0.0100	n/a	n/a	-0.0600
A1(LH)	!A2&A3&!B1&!B2	0.0100	n/a	n/a	-0.0523
A1(LH)	A2&!A3&!B1&!B2	0.0100	n/a	n/a	-0.0583
A1(LH)	A2&A3&!B1&!B2	0.0100	n/a	n/a	-0.0570
A1(LH)	!A2&A3&!B1&B2	0.0100	n/a	n/a	-0.0165
A1(LH)	!A2&A3&B1&!B2	0.0100	n/a	n/a	-0.0165
A1(LH)	!A2&A3&B1&B2	0.0100	n/a	n/a	-0.0165
A1(LH)	A2&!A3&!B1&B2	0.0100	n/a	n/a	-0.0170
A1(LH)	A2&!A3&B1&!B2	0.0100	n/a	n/a	-0.0170
A1(LH)	A2&!A3&B1&B2	0.0100	n/a	n/a	-0.0170
A1(LH)	A2&A3&!B1&B2	0.0100	n/a	n/a	-0.0170
A1(LH)	A2&A3&B1&!B2	0.0100	n/a	n/a	-0.0170
A1(LH)	A2&A3&B1&B2	0.0100	n/a	n/a	-0.0170
A2(LH)	!A1&!A3&!B1&!B2	0.0100	n/a	n/a	-0.0598
A2(LH)	!A1&A3&!B1&!B2	0.0100	n/a	n/a	-0.0581
A2(LH)	A1&!A3&!B1&!B2	0.0100	n/a	n/a	-0.0579
A2(LH)	A1&A3&!B1&!B2	0.0100	n/a	n/a	-0.0558
A2(LH)	!A1&A3&!B1&B2	0.0100	n/a	n/a	-0.0180
A2(LH)	!A1&A3&B1&!B2	0.0100	n/a	n/a	-0.0180
A2(LH)	!A1&A3&B1&B2	0.0100	n/a	n/a	-0.0180
A2(LH)	A1&!A3&!B1&B2	0.0100	n/a	n/a	-0.0495
A2(LH)	A1&!A3&B1&!B2	0.0100	n/a	n/a	-0.0495
A2(LH)	A1&!A3&B1&B2	0.0100	n/a	n/a	-0.0496
A2(LH)	A1&A3&!B1&B2	0.0100	n/a	n/a	-0.0439
A2(LH)	A1&A3&B1&!B2	0.0100	n/a	n/a	-0.0439
A2(LH)	A1&A3&B1&B2	0.0100	n/a	n/a	-0.0439
A3(HL)	!A1&!A2&!B1&!B2	0.0100	n/a	n/a	0.0651
A3(HL)	!A1&A2&!B1&!B2	0.0100	n/a	n/a	0.0595
A3(HL)	A1&!A2&!B1&!B2	0.0100	n/a	n/a	0.0595
A3(HL)	A1&A2&!B1&!B2	0.0100	n/a	n/a	0.0595
A3(HL)	!A1&A2&!B1&B2	0.0100	n/a	n/a	0.0595
A3(HL)	!A1&A2&B1&!B2	0.0100	n/a	n/a	0.0595
A3(HL)	!A1&A2&B1&B2	0.0100	n/a	n/a	0.0595
A3(HL)	A1&!A2&!B1&B2	0.0100	n/a	n/a	0.0595
A3(HL)	A1&!A2&B1&!B2	0.0100	n/a	n/a	0.0595
A3(HL)	A1&!A2&B1&B2	0.0100	n/a	n/a	0.0595
A3(HL)	A1&A2&!B1&B2	0.0100	n/a	n/a	0.0595
A3(HL)	A1&A2&B1&!B2	0.0100	n/a	n/a	0.0595
A3(HL)	A1&A2&B1&B2	0.0100	n/a	n/a	0.0595
A2(HL)	!A1&!A3&!B1&!B2	0.0100	n/a	n/a	0.0653
A2(HL)	!A1&A3&!B1&!B2	0.0100	n/a	n/a	0.0597
A2(HL)	A1&!A3&!B1&!B2	0.0100	n/a	n/a	0.0597
A2(HL)	A1&A3&!B1&!B2	0.0100	n/a	n/a	0.0355
A2(HL)	!A1&A3&!B1&B2	0.0100	n/a	n/a	0.0377
A2(HL)	!A1&A3&B1&!B2	0.0100	n/a	n/a	0.0377
A2(HL)	!A1&A3&B1&B2	0.0100	n/a	n/a	0.0376
A2(HL)	A1&!A3&!B1&B2	0.0100	n/a	n/a	0.0597
A2(HL)	A1&!A3&B1&!B2	0.0100	n/a	n/a	0.0597
A2(HL)	A1&!A3&B1&B2	0.0100	n/a	n/a	0.0597
A2(HL)	A1&A3&!B1&B2	0.0100	n/a	n/a	0.0355
A2(HL)	A1&A3&B1&!B2	0.0100	n/a	n/a	0.0355
A2(HL)	A1&A3&B1&B2	0.0100	n/a	n/a	0.0355

continues on next page

Table 251 – continued from previous page

B1(HL)	!A1&!A2&!A3&!B2	0.0100	n/a	n/a	0.0674
B1(HL)	!A1&!A2&!A3&B2	0.0100	n/a	n/a	0.0684
B1(HL)	!A1&!A2&A3&B2	0.0100	n/a	n/a	0.0397
B1(HL)	!A1&A2&!A3&B2	0.0100	n/a	n/a	0.0397
B1(HL)	!A1&A2&A3&B2	0.0100	n/a	n/a	0.0397
B1(HL)	A1&!A2&!A3&B2	0.0100	n/a	n/a	0.0397
B1(HL)	A1&!A2&A3&B2	0.0100	n/a	n/a	0.0397
B1(HL)	A1&A2&!A3&B2	0.0100	n/a	n/a	0.0397
B1(HL)	A1&A2&A3&B2	0.0100	n/a	n/a	0.0397
B2(LH)	!A1&!A2&!A3&!B1	0.0100	n/a	n/a	0.0522
B2(LH)	!A1&!A2&!A3&B1	0.0100	n/a	n/a	-0.0649
B2(LH)	!A1&!A2&A3&B1	0.0100	n/a	n/a	-0.0498
B2(LH)	!A1&A2&!A3&B1	0.0100	n/a	n/a	-0.0498
B2(LH)	!A1&A2&A3&B1	0.0100	n/a	n/a	-0.0498
B2(LH)	A1&!A2&!A3&B1	0.0100	n/a	n/a	-0.0498
B2(LH)	A1&!A2&A3&B1	0.0100	n/a	n/a	-0.0498
B2(LH)	A1&A2&!A3&B1	0.0100	n/a	n/a	-0.0498
B2(LH)	A1&A2&A3&B1	0.0100	n/a	n/a	-0.0498
B2(HL)	!A1&!A2&!A3&!B1	0.0100	n/a	n/a	0.0670
B2(HL)	!A1&!A2&!A3&B1	0.0100	n/a	n/a	0.0681
B2(HL)	!A1&!A2&A3&B1	0.0100	n/a	n/a	0.0595
B2(HL)	!A1&A2&!A3&B1	0.0100	n/a	n/a	0.0595
B2(HL)	!A1&A2&A3&B1	0.0100	n/a	n/a	0.0595
B2(HL)	A1&!A2&!A3&B1	0.0100	n/a	n/a	0.0595
B2(HL)	A1&!A2&A3&B1	0.0100	n/a	n/a	0.0595
B2(HL)	A1&A2&!A3&B1	0.0100	n/a	n/a	0.0595
B2(HL)	A1&A2&A3&B1	0.0100	n/a	n/a	0.0595
A1(HL)	!A2&!A3&!B1&!B2	0.0100	n/a	n/a	0.0653
A1(HL)	!A2&A3&!B1&!B2	0.0100	n/a	n/a	0.0598
A1(HL)	A2&!A3&!B1&!B2	0.0100	n/a	n/a	0.0599
A1(HL)	A2&A3&!B1&!B2	0.0100	n/a	n/a	0.0599
A1(HL)	!A2&A3&!B1&B2	0.0100	n/a	n/a	0.0776
A1(HL)	!A2&A3&B1&!B2	0.0100	n/a	n/a	0.0776
A1(HL)	!A2&A3&B1&B2	0.0100	n/a	n/a	0.0776
A1(HL)	A2&!A3&!B1&B2	0.0100	n/a	n/a	0.0409
A1(HL)	A2&!A3&B1&!B2	0.0100	n/a	n/a	0.0409
A1(HL)	A2&!A3&B1&B2	0.0100	n/a	n/a	0.0410
A1(HL)	A2&A3&!B1&B2	0.0100	n/a	n/a	0.0409
A1(HL)	A2&A3&B1&!B2	0.0100	n/a	n/a	0.0409
A1(HL)	A2&A3&B1&B2	0.0100	n/a	n/a	0.0410
B1(LH)	!A1&!A2&!A3&!B2	0.0100	n/a	n/a	0.0515
B1(LH)	!A1&!A2&!A3&B2	0.0100	n/a	n/a	-0.0657
B1(LH)	!A1&!A2&A3&B2	0.0100	n/a	n/a	-0.0169
B1(LH)	!A1&A2&!A3&B2	0.0100	n/a	n/a	-0.0169
B1(LH)	!A1&A2&A3&B2	0.0100	n/a	n/a	-0.0169
B1(LH)	A1&!A2&!A3&B2	0.0100	n/a	n/a	-0.0169
B1(LH)	A1&!A2&A3&B2	0.0100	n/a	n/a	-0.0169
B1(LH)	A1&A2&!A3&B2	0.0100	n/a	n/a	-0.0169
B1(LH)	A1&A2&A3&B2	0.0100	n/a	n/a	-0.0169

LEAKAGE POWER

When Condition	Power (nW)
!A1&!A2&!A3&!B1&!B2	0.1006
!A1&!A2&!A3&!B1&B2	0.2002
!A1&!A2&!A3&B1&!B2	0.2002
!A1&!A2&!A3&B1&B2	0.2007
!A1&!A2&A3&!B1&!B2	0.1012
!A1&A2&!A3&!B1&!B2	0.1012
!A1&A2&A3&!B1&!B2	0.1012
A1&!A2&!A3&!B1&!B2	0.1012
A1&!A2&A3&!B1&!B2	0.1012
A1&A2&!A3&!B1&!B2	0.1012
A1&A2&A3&!B1&!B2	0.1012
!A1&!A2&A3&!B1&B2	0.2099
!A1&!A2&A3&B1&!B2	0.1744
!A1&!A2&A3&B1&B2	0.1744
!A1&A2&!A3&!B1&B2	0.1746
!A1&A2&!A3&B1&!B2	0.1392
!A1&A2&!A3&B1&B2	0.1392
!A1&A2&A3&!B1&B2	0.1746
!A1&A2&A3&B1&!B2	0.1392
!A1&A2&A3&B1&B2	0.1392
A1&!A2&!A3&!B1&B2	0.1392
A1&!A2&!A3&B1&!B2	0.1037
A1&!A2&!A3&B1&B2	0.1037
A1&!A2&A3&!B1&B2	0.1392
A1&!A2&A3&B1&!B2	0.1037
A1&!A2&A3&B1&B2	0.1037
A1&A2&!A3&!B1&B2	0.1392
A1&A2&!A3&B1&!B2	0.1037
A1&A2&!A3&B1&B2	0.1037
A1&A2&A3&!B1&B2	0.1392
A1&A2&A3&B1&!B2	0.1037
A1&A2&A3&B1&B2	0.1037

gf180mcu_fd_sc_mcu9t5v0__oai32_2

gf180mcu_fd_sc_mcu9t5v0__oai32_2 symbol

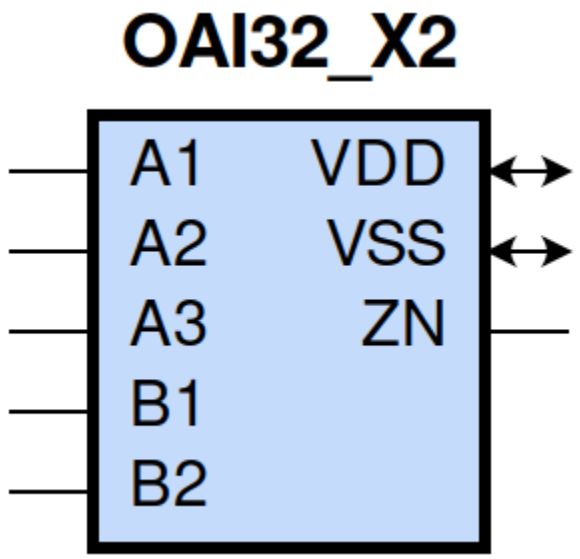

gf180mcu_fd_sc_mcu9t5v0__oai32_2 schematic

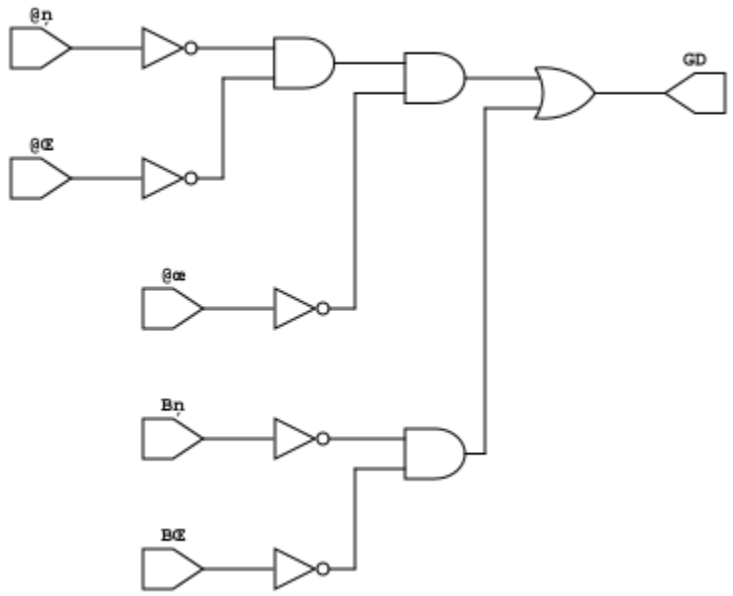

gf180mcu_fd_sc_mcu9t5v0__oai32_2 layout

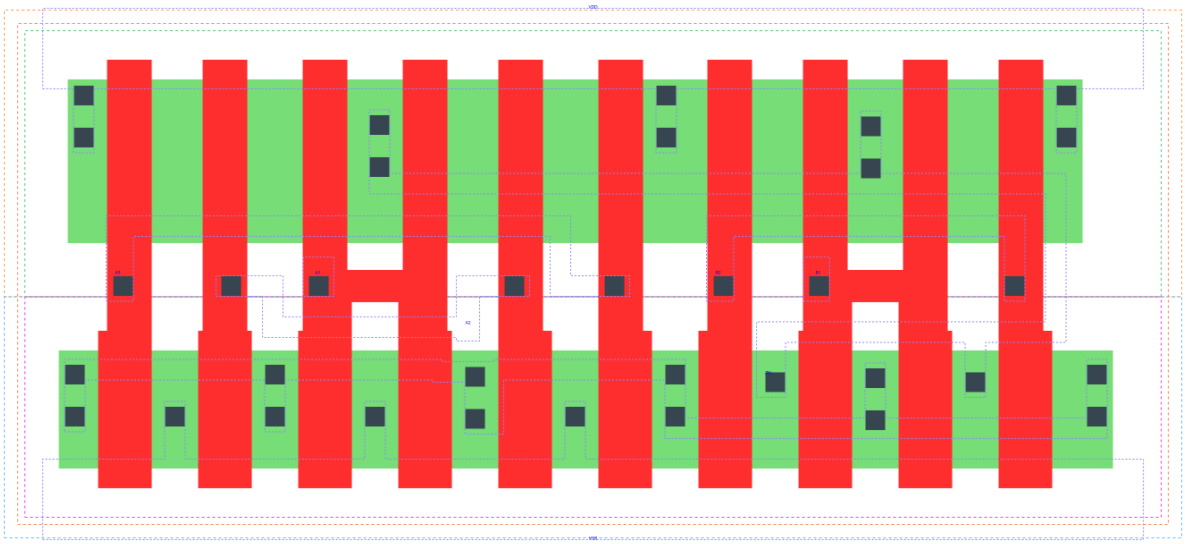

OAI32_X2 is a two 3-input OR, 2-input OR into 2-input NAND with 2X drive strength

Attributes

Attribute	Value
area	62.092800 μm^2

OUTPUT FUNCTIONS

Output Pin	Function
ZN	(((!A1)&(!A2)&(!A3))|((!B1)&(!B2)))

TRUTH TABLE FOR ZN

A1	A2	A3	B1	B2	ZN
0	0	0	?	?	1
?	?	?	0	0	1
1	?	?	1	?	0
1	?	?	?	1	0
?	1	?	1	?	0
?	1	?	?	1	0
?	?	1	1	?	0
?	?	1	?	1	0

FUNCTIONAL SCHEMATIC

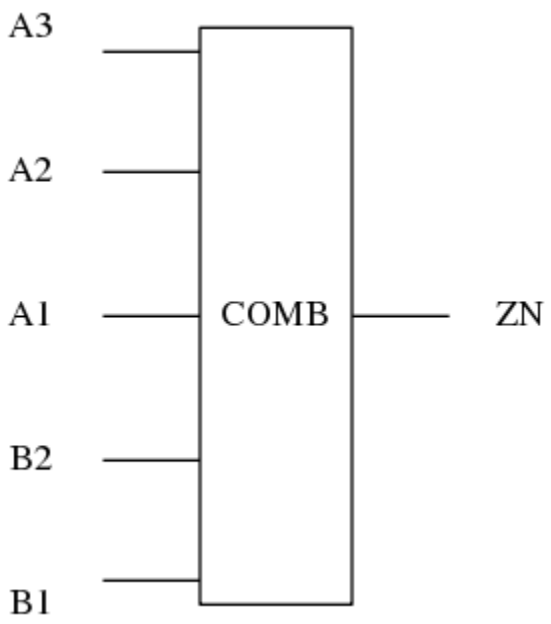

PIN CAPACITANCE (pf)

Pin	Type	Capacitance (pf)
A3	input	0.0139
A2	input	0.0137
A1	input	0.0134
B2	input	0.0139
B1	input	0.0136

DELAY AND OUTPUT TRANSITION TIME corresponding to min slew and load

Input Pin	Output	When Condition	Tin (ns)	Out Load (pf)	Delay (ns)	Tout (ns)
A3(LH)	ZN(HL)	!A1&!A2&!B1&B2	0.0100	0.0010	0.1409	0.0737
A3(LH)	ZN(HL)	!A1&!A2&B1&!B2	0.0100	0.0010	0.1135	0.0582
A3(LH)	ZN(HL)	!A1&!A2&B1&B2	0.0100	0.0010	0.0930	0.0533
A3(HL)	ZN(LH)	!A1&!A2&!B1&B2	0.0100	0.0010	0.3564	0.2825
A3(HL)	ZN(LH)	!A1&!A2&B1&!B2	0.0100	0.0010	0.3365	0.2182
A3(HL)	ZN(LH)	!A1&!A2&B1&B2	0.0100	0.0010	0.3724	0.2451
A2(HL)	ZN(LH)	!A1&!A3&!B1&B2	0.0100	0.0010	0.3331	0.2826
A2(HL)	ZN(LH)	!A1&!A3&B1&!B2	0.0100	0.0010	0.3130	0.2181
A2(HL)	ZN(LH)	!A1&!A3&B1&B2	0.0100	0.0010	0.3490	0.2452
A2(LH)	ZN(HL)	!A1&!A3&!B1&B2	0.0100	0.0010	0.1319	0.0618
A2(LH)	ZN(HL)	!A1&!A3&B1&!B2	0.0100	0.0010	0.1081	0.0472
A2(LH)	ZN(HL)	!A1&!A3&B1&B2	0.0100	0.0010	0.0907	0.0446
A1(HL)	ZN(LH)	!A2&!A3&!B1&B2	0.0100	0.0010	0.2770	0.2823
A1(HL)	ZN(LH)	!A2&!A3&B1&!B2	0.0100	0.0010	0.2570	0.2175
A1(HL)	ZN(LH)	!A2&!A3&B1&B2	0.0100	0.0010	0.2927	0.2449
A1(LH)	ZN(HL)	!A2&!A3&!B1&B2	0.0100	0.0010	0.1088	0.0471
A1(LH)	ZN(HL)	!A2&!A3&B1&!B2	0.0100	0.0010	0.0872	0.0329
A1(LH)	ZN(HL)	!A2&!A3&B1&B2	0.0100	0.0010	0.0754	0.0334
B2(HL)	ZN(LH)	!A1&!A2&A3&!B1	0.0100	0.0010	0.1274	0.1238
B2(HL)	ZN(LH)	!A1&A2&!A3&!B1	0.0100	0.0010	0.1276	0.1092
B2(HL)	ZN(LH)	!A1&A2&A3&!B1	0.0100	0.0010	0.1265	0.1090
B2(HL)	ZN(LH)	A1&!A2&!A3&!B1	0.0100	0.0010	0.1191	0.0706
B2(HL)	ZN(LH)	A1&!A2&A3&!B1	0.0100	0.0010	0.1182	0.0706
B2(HL)	ZN(LH)	A1&A2&!A3&!B1	0.0100	0.0010	0.1183	0.0706
B2(HL)	ZN(LH)	A1&A2&A3&!B1	0.0100	0.0010	0.1177	0.0707
B2(LH)	ZN(HL)	!A1&!A2&A3&!B1	0.0100	0.0010	0.1060	0.0733
B2(LH)	ZN(HL)	!A1&A2&!A3&!B1	0.0100	0.0010	0.0949	0.0620
B2(LH)	ZN(HL)	!A1&A2&A3&!B1	0.0100	0.0010	0.0794	0.0476
B2(LH)	ZN(HL)	A1&!A2&!A3&!B1	0.0100	0.0010	0.0710	0.0469
B2(LH)	ZN(HL)	A1&!A2&A3&!B1	0.0100	0.0010	0.0604	0.0361
B2(LH)	ZN(HL)	A1&A2&!A3&!B1	0.0100	0.0010	0.0604	0.0362
B2(LH)	ZN(HL)	A1&A2&A3&!B1	0.0100	0.0010	0.0570	0.0333
B1(HL)	ZN(LH)	!A1&!A2&A3&!B2	0.0100	0.0010	0.1034	0.1233
B1(HL)	ZN(LH)	!A1&A2&!A3&!B2	0.0100	0.0010	0.1035	0.1087
B1(HL)	ZN(LH)	!A1&A2&A3&!B2	0.0100	0.0010	0.1025	0.1087
B1(HL)	ZN(LH)	A1&!A2&!A3&!B2	0.0100	0.0010	0.0951	0.0702
B1(HL)	ZN(LH)	A1&!A2&A3&!B2	0.0100	0.0010	0.0942	0.0702
B1(HL)	ZN(LH)	A1&A2&!A3&!B2	0.0100	0.0010	0.0943	0.0701
B1(HL)	ZN(LH)	A1&A2&A3&!B2	0.0100	0.0010	0.0938	0.0702
B1(LH)	ZN(HL)	!A1&!A2&A3&!B2	0.0100	0.0010	0.0807	0.0571
B1(LH)	ZN(HL)	!A1&A2&!A3&!B2	0.0100	0.0010	0.0735	0.0465
B1(LH)	ZN(HL)	!A1&A2&A3&!B2	0.0100	0.0010	0.0626	0.0357
B1(LH)	ZN(HL)	A1&!A2&!A3&!B2	0.0100	0.0010	0.0525	0.0310
B1(LH)	ZN(HL)	A1&!A2&A3&!B2	0.0100	0.0010	0.0464	0.0244
B1(LH)	ZN(HL)	A1&A2&!A3&!B2	0.0100	0.0010	0.0464	0.0244
B1(LH)	ZN(HL)	A1&A2&A3&!B2	0.0100	0.0010	0.0444	0.0226

DYNAMIC ENERGY

Input Pin	When Condition	Tin (ns)	Output	Out Load (pf)	Energy (uW/MHz)
A1	!A2&!A3&!B1&B2	0.0100	ZN(LH)	0.0010	0.7732
A1	!A2&!A3&B1&!B2	0.0100	ZN(LH)	0.0010	0.6846
A1	!A2&!A3&B1&B2	0.0100	ZN(LH)	0.0010	0.7567
B2	!A1&!A2&A3&!B1	0.0100	ZN(LH)	0.0010	0.6232
B2	!A1&A2&!A3&!B1	0.0100	ZN(LH)	0.0010	0.5362
B2	!A1&A2&A3&!B1	0.0100	ZN(LH)	0.0010	0.5340
B2	A1&!A2&!A3&!B1	0.0100	ZN(LH)	0.0010	0.4472
B2	A1&!A2&A3&!B1	0.0100	ZN(LH)	0.0010	0.4451
B2	A1&A2&!A3&!B1	0.0100	ZN(LH)	0.0010	0.4451
B2	A1&A2&A3&!B1	0.0100	ZN(LH)	0.0010	0.4440
B1	!A1&!A2&A3&!B2	0.0100	ZN(LH)	0.0010	0.5342
B1	!A1&A2&!A3&!B2	0.0100	ZN(LH)	0.0010	0.4472
B1	!A1&A2&A3&!B2	0.0100	ZN(LH)	0.0010	0.4448
B1	A1&!A2&!A3&!B2	0.0100	ZN(LH)	0.0010	0.3583
B1	A1&!A2&A3&!B2	0.0100	ZN(LH)	0.0010	0.3559
B1	A1&A2&!A3&!B2	0.0100	ZN(LH)	0.0010	0.3557
B1	A1&A2&A3&!B2	0.0100	ZN(LH)	0.0010	0.3545
A2	!A1&!A3&!B1&B2	0.0100	ZN(LH)	0.0010	0.8625
A2	!A1&!A3&B1&!B2	0.0100	ZN(LH)	0.0010	0.7737
A2	!A1&!A3&B1&B2	0.0100	ZN(LH)	0.0010	0.8460
B1	!A1&!A2&A3&!B2	0.0100	ZN(HL)	0.0010	0.1680
B1	!A1&A2&!A3&!B2	0.0100	ZN(HL)	0.0010	0.0936
B1	!A1&A2&A3&!B2	0.0100	ZN(HL)	0.0010	0.0938
B1	A1&!A2&!A3&!B2	0.0100	ZN(HL)	0.0010	0.0164
B1	A1&!A2&A3&!B2	0.0100	ZN(HL)	0.0010	0.0164
B1	A1&A2&!A3&!B2	0.0100	ZN(HL)	0.0010	0.0164
B1	A1&A2&A3&!B2	0.0100	ZN(HL)	0.0010	0.0164
A3	!A1&!A2&!B1&B2	0.0100	ZN(HL)	0.0010	0.2309
A3	!A1&!A2&B1&!B2	0.0100	ZN(HL)	0.0010	0.1573
A3	!A1&!A2&B1&B2	0.0100	ZN(HL)	0.0010	0.1572
A1	!A2&!A3&!B1&B2	0.0100	ZN(HL)	0.0010	0.0926
A1	!A2&!A3&B1&!B2	0.0100	ZN(HL)	0.0010	0.0158
A1	!A2&!A3&B1&B2	0.0100	ZN(HL)	0.0010	0.0163
B2	!A1&!A2&A3&!B1	0.0100	ZN(HL)	0.0010	0.2320
B2	!A1&A2&!A3&!B1	0.0100	ZN(HL)	0.0010	0.1582
B2	!A1&A2&A3&!B1	0.0100	ZN(HL)	0.0010	0.1585
B2	A1&!A2&!A3&!B1	0.0100	ZN(HL)	0.0010	0.0827
B2	A1&!A2&A3&!B1	0.0100	ZN(HL)	0.0010	0.0826
B2	A1&A2&!A3&!B1	0.0100	ZN(HL)	0.0010	0.0827
B2	A1&A2&A3&!B1	0.0100	ZN(HL)	0.0010	0.0825
A2	!A1&!A3&!B1&B2	0.0100	ZN(HL)	0.0010	0.1646
A2	!A1&!A3&B1&!B2	0.0100	ZN(HL)	0.0010	0.0908
A2	!A1&!A3&B1&B2	0.0100	ZN(HL)	0.0010	0.0906
A3	!A1&!A2&!B1&B2	0.0100	ZN(LH)	0.0010	0.9499
A3	!A1&!A2&B1&!B2	0.0100	ZN(LH)	0.0010	0.8610
A3	!A1&!A2&B1&B2	0.0100	ZN(LH)	0.0010	0.9331
A3(LH)	!A1&!A2&!B1&!B2	0.0100	n/a	n/a	-0.1187

continues on next page

Table 254 – continued from previous page

A3(LH)	!A1&A2&!B1&!B2	0.0100	n/a	n/a	-0.1153
A3(LH)	A1&!A2&!B1&!B2	0.0100	n/a	n/a	-0.1028
A3(LH)	A1&A2&!B1&!B2	0.0100	n/a	n/a	-0.1127
A3(LH)	!A1&A2&!B1&B2	0.0100	n/a	n/a	-0.1033
A3(LH)	!A1&A2&B1&!B2	0.0100	n/a	n/a	-0.1033
A3(LH)	!A1&A2&B1&B2	0.0100	n/a	n/a	-0.1033
A3(LH)	A1&!A2&!B1&B2	0.0100	n/a	n/a	-0.0987
A3(LH)	A1&!A2&B1&!B2	0.0100	n/a	n/a	-0.0987
A3(LH)	A1&!A2&B1&B2	0.0100	n/a	n/a	-0.0987
A3(LH)	A1&A2&!B1&B2	0.0100	n/a	n/a	-0.1127
A3(LH)	A1&A2&B1&!B2	0.0100	n/a	n/a	-0.1127
A3(LH)	A1&A2&B1&B2	0.0100	n/a	n/a	-0.1127
A1(LH)	!A2&!A3&!B1&!B2	0.0100	n/a	n/a	-0.1197
A1(LH)	!A2&A3&!B1&!B2	0.0100	n/a	n/a	-0.1042
A1(LH)	A2&!A3&!B1&!B2	0.0100	n/a	n/a	-0.1166
A1(LH)	A2&A3&!B1&!B2	0.0100	n/a	n/a	-0.1139
A1(LH)	!A2&A3&!B1&B2	0.0100	n/a	n/a	-0.0329
A1(LH)	!A2&A3&B1&!B2	0.0100	n/a	n/a	-0.0329
A1(LH)	!A2&A3&B1&B2	0.0100	n/a	n/a	-0.0329
A1(LH)	A2&!A3&!B1&B2	0.0100	n/a	n/a	-0.0339
A1(LH)	A2&!A3&B1&!B2	0.0100	n/a	n/a	-0.0339
A1(LH)	A2&!A3&B1&B2	0.0100	n/a	n/a	-0.0338
A1(LH)	A2&A3&!B1&B2	0.0100	n/a	n/a	-0.0338
A1(LH)	A2&A3&B1&!B2	0.0100	n/a	n/a	-0.0338
A1(LH)	A2&A3&B1&B2	0.0100	n/a	n/a	-0.0338
A2(LH)	!A1&!A3&!B1&!B2	0.0100	n/a	n/a	-0.1193
A2(LH)	!A1&A3&!B1&!B2	0.0100	n/a	n/a	-0.1160
A2(LH)	A1&!A3&!B1&!B2	0.0100	n/a	n/a	-0.1158
A2(LH)	A1&A3&!B1&!B2	0.0100	n/a	n/a	-0.1115
A2(LH)	!A1&A3&!B1&B2	0.0100	n/a	n/a	-0.0361
A2(LH)	!A1&A3&B1&!B2	0.0100	n/a	n/a	-0.0361
A2(LH)	!A1&A3&B1&B2	0.0100	n/a	n/a	-0.0361
A2(LH)	A1&!A3&!B1&B2	0.0100	n/a	n/a	-0.0991
A2(LH)	A1&!A3&B1&!B2	0.0100	n/a	n/a	-0.0991
A2(LH)	A1&!A3&B1&B2	0.0100	n/a	n/a	-0.0991
A2(LH)	A1&A3&!B1&B2	0.0100	n/a	n/a	-0.0877
A2(LH)	A1&A3&B1&!B2	0.0100	n/a	n/a	-0.0877
A2(LH)	A1&A3&B1&B2	0.0100	n/a	n/a	-0.0876
A3(HL)	!A1&!A2&!B1&!B2	0.0100	n/a	n/a	0.1297
A3(HL)	!A1&A2&!B1&!B2	0.0100	n/a	n/a	0.1190
A3(HL)	A1&!A2&!B1&!B2	0.0100	n/a	n/a	0.1190
A3(HL)	A1&A2&!B1&!B2	0.0100	n/a	n/a	0.1189
A3(HL)	!A1&A2&!B1&B2	0.0100	n/a	n/a	0.1189
A3(HL)	!A1&A2&B1&!B2	0.0100	n/a	n/a	0.1189
A3(HL)	!A1&A2&B1&B2	0.0100	n/a	n/a	0.1189
A3(HL)	A1&!A2&!B1&B2	0.0100	n/a	n/a	0.1190
A3(HL)	A1&!A2&B1&!B2	0.0100	n/a	n/a	0.1190
A3(HL)	A1&!A2&B1&B2	0.0100	n/a	n/a	0.1190
A3(HL)	A1&A2&!B1&B2	0.0100	n/a	n/a	0.1190
A3(HL)	A1&A2&B1&!B2	0.0100	n/a	n/a	0.1189
A3(HL)	A1&A2&B1&B2	0.0100	n/a	n/a	0.1190
A2(HL)	!A1&!A3&!B1&!B2	0.0100	n/a	n/a	0.1300

continues on next page

Table 254 – continued from previous page

A2(HL)	!A1&A3&!B1&!B2	0.0100	n/a	n/a	0.1190
A2(HL)	A1&!A3&!B1&!B2	0.0100	n/a	n/a	0.1191
A2(HL)	A1&A3&!B1&!B2	0.0100	n/a	n/a	0.0710
A2(HL)	!A1&A3&!B1&B2	0.0100	n/a	n/a	0.0766
A2(HL)	!A1&A3&B1&!B2	0.0100	n/a	n/a	0.0766
A2(HL)	!A1&A3&B1&B2	0.0100	n/a	n/a	0.0766
A2(HL)	A1&!A3&!B1&B2	0.0100	n/a	n/a	0.1192
A2(HL)	A1&!A3&B1&!B2	0.0100	n/a	n/a	0.1192
A2(HL)	A1&!A3&B1&B2	0.0100	n/a	n/a	0.1192
A2(HL)	A1&A3&!B1&B2	0.0100	n/a	n/a	0.0709
A2(HL)	A1&A3&B1&!B2	0.0100	n/a	n/a	0.0709
A2(HL)	A1&A3&B1&B2	0.0100	n/a	n/a	0.0709
B1(HL)	!A1&!A2&!A3&!B2	0.0100	n/a	n/a	0.1343
B1(HL)	!A1&!A2&!A3&B2	0.0100	n/a	n/a	0.1362
B1(HL)	!A1&!A2&A3&B2	0.0100	n/a	n/a	0.0794
B1(HL)	!A1&A2&!A3&B2	0.0100	n/a	n/a	0.0794
B1(HL)	!A1&A2&A3&B2	0.0100	n/a	n/a	0.0794
B1(HL)	A1&!A2&!A3&B2	0.0100	n/a	n/a	0.0794
B1(HL)	A1&!A2&A3&B2	0.0100	n/a	n/a	0.0794
B1(HL)	A1&A2&!A3&B2	0.0100	n/a	n/a	0.0794
B1(HL)	A1&A2&A3&B2	0.0100	n/a	n/a	0.0793
B2(LH)	!A1&!A2&!A3&!B1	0.0100	n/a	n/a	0.1090
B2(LH)	!A1&!A2&!A3&B1	0.0100	n/a	n/a	-0.1300
B2(LH)	!A1&!A2&A3&B1	0.0100	n/a	n/a	-0.0995
B2(LH)	!A1&A2&!A3&B1	0.0100	n/a	n/a	-0.0995
B2(LH)	!A1&A2&A3&B1	0.0100	n/a	n/a	-0.0995
B2(LH)	A1&!A2&!A3&B1	0.0100	n/a	n/a	-0.0995
B2(LH)	A1&!A2&A3&B1	0.0100	n/a	n/a	-0.0995
B2(LH)	A1&A2&!A3&B1	0.0100	n/a	n/a	-0.0995
B2(LH)	A1&A2&A3&B1	0.0100	n/a	n/a	-0.0995
B2(HL)	!A1&!A2&!A3&!B1	0.0100	n/a	n/a	0.1338
B2(HL)	!A1&!A2&!A3&B1	0.0100	n/a	n/a	0.1360
B2(HL)	!A1&!A2&A3&B1	0.0100	n/a	n/a	0.1189
B2(HL)	!A1&A2&!A3&B1	0.0100	n/a	n/a	0.1189
B2(HL)	!A1&A2&A3&B1	0.0100	n/a	n/a	0.1189
B2(HL)	A1&!A2&!A3&B1	0.0100	n/a	n/a	0.1189
B2(HL)	A1&!A2&A3&B1	0.0100	n/a	n/a	0.1189
B2(HL)	A1&A2&!A3&B1	0.0100	n/a	n/a	0.1189
B2(HL)	A1&A2&A3&B1	0.0100	n/a	n/a	0.1189
A1(HL)	!A2&!A3&!B1&!B2	0.0100	n/a	n/a	0.1304
A1(HL)	!A2&A3&!B1&!B2	0.0100	n/a	n/a	0.1195
A1(HL)	A2&!A3&!B1&!B2	0.0100	n/a	n/a	0.1195
A1(HL)	A2&A3&!B1&!B2	0.0100	n/a	n/a	0.1197
A1(HL)	!A2&A3&!B1&B2	0.0100	n/a	n/a	0.1552
A1(HL)	!A2&A3&B1&!B2	0.0100	n/a	n/a	0.1552
A1(HL)	!A2&A3&B1&B2	0.0100	n/a	n/a	0.1551
A1(HL)	A2&!A3&!B1&B2	0.0100	n/a	n/a	0.0806
A1(HL)	A2&!A3&B1&!B2	0.0100	n/a	n/a	0.0806
A1(HL)	A2&!A3&B1&B2	0.0100	n/a	n/a	0.0806
A1(HL)	A2&A3&!B1&B2	0.0100	n/a	n/a	0.0806
A1(HL)	A2&A3&B1&!B2	0.0100	n/a	n/a	0.0806
A1(HL)	A2&A3&B1&B2	0.0100	n/a	n/a	0.0806

continues on next page

Table 254 – continued from previous page

B1(LH)	!A1&!A2&!A3&!B2	0.0100	n/a	n/a	0.1077
B1(LH)	!A1&!A2&!A3&B2	0.0100	n/a	n/a	-0.1311
B1(LH)	!A1&!A2&A3&B2	0.0100	n/a	n/a	-0.0338
B1(LH)	!A1&A2&!A3&B2	0.0100	n/a	n/a	-0.0338
B1(LH)	!A1&A2&A3&B2	0.0100	n/a	n/a	-0.0338
B1(LH)	A1&!A2&!A3&B2	0.0100	n/a	n/a	-0.0338
B1(LH)	A1&!A2&A3&B2	0.0100	n/a	n/a	-0.0338
B1(LH)	A1&A2&!A3&B2	0.0100	n/a	n/a	-0.0338
B1(LH)	A1&A2&A3&B2	0.0100	n/a	n/a	-0.0338

LEAKAGE POWER

When Condition	Power (nW)
!A1&!A2&!A3&!B1&!B2	0.1511
!A1&!A2&!A3&!B1&B2	0.3512
!A1&!A2&!A3&B1&!B2	0.3512
!A1&!A2&!A3&B1&B2	0.3522
!A1&!A2&A3&!B1&!B2	0.1523
!A1&A2&!A3&!B1&!B2	0.1523
!A1&A2&A3&!B1&!B2	0.1523
A1&!A2&!A3&!B1&!B2	0.1523
A1&!A2&A3&!B1&!B2	0.1523
A1&A2&!A3&!B1&!B2	0.1523
A1&A2&A3&!B1&!B2	0.1523
!A1&!A2&A3&!B1&B2	0.3698
!A1&!A2&A3&B1&!B2	0.2989
!A1&!A2&A3&B1&B2	0.2989
!A1&A2&!A3&!B1&B2	0.2993
!A1&A2&!A3&B1&!B2	0.2283
!A1&A2&!A3&B1&B2	0.2283
!A1&A2&A3&!B1&B2	0.2993
!A1&A2&A3&B1&!B2	0.2283
!A1&A2&A3&B1&B2	0.2283
A1&!A2&!A3&!B1&B2	0.2283
A1&!A2&!A3&B1&!B2	0.1574
A1&!A2&!A3&B1&B2	0.1574
A1&!A2&A3&!B1&B2	0.2283
A1&!A2&A3&B1&!B2	0.1574
A1&!A2&A3&B1&B2	0.1574
A1&A2&!A3&!B1&B2	0.2283
A1&A2&!A3&B1&!B2	0.1574
A1&A2&!A3&B1&B2	0.1574
A1&A2&A3&!B1&B2	0.2283
A1&A2&A3&B1&!B2	0.1574
A1&A2&A3&B1&B2	0.1574

gf180mcu_fd_sc_mcu9t5v0__oai32_4

gf180mcu_fd_sc_mcu9t5v0__oai32_4 symbol

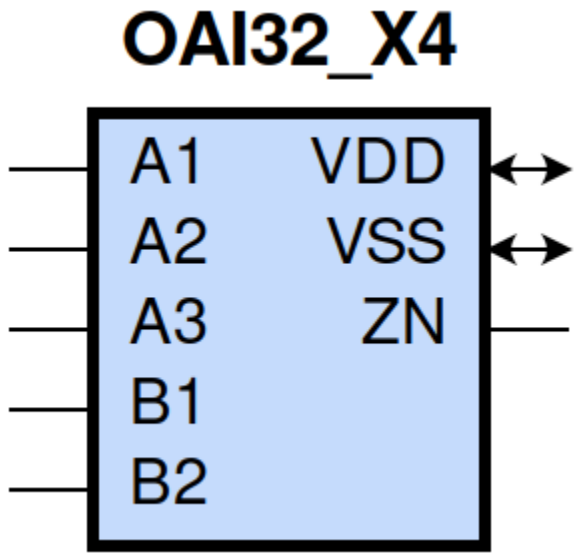

gf180mcu_fd_sc_mcu9t5v0__oai32_4 schematic

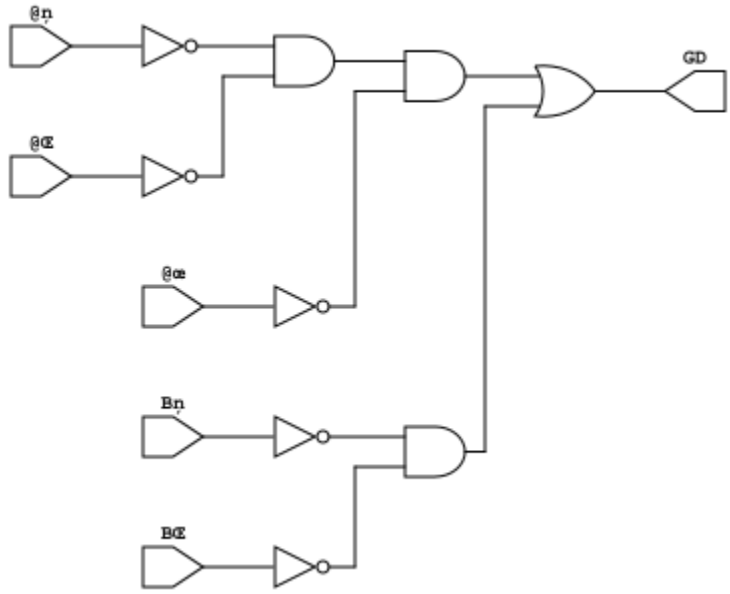

gf180mcu_fd_sc_mcu9t5v0__oai32_4 layout

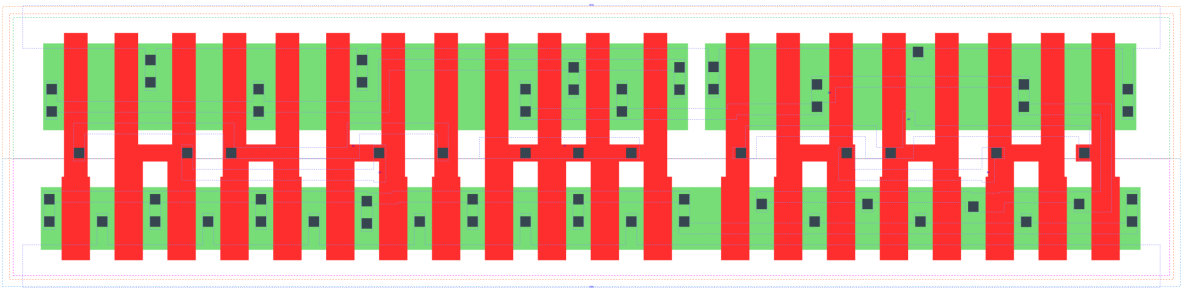

OAI32_X4 is a two 3-input OR, 2-input OR into 2-input NAND with 4X drive strength

Attributes

Attribute	Value
area	121.363200 μm^2

OUTPUT FUNCTIONS

Output Pin	Function
ZN	(((!A1)&(!A2)&(!A3))|((!B1)&(!B2)))

TRUTH TABLE FOR ZN

A1	A2	A3	B1	B2	ZN
0	0	0	?	?	1
?	?	?	0	0	1
1	?	?	1	?	0
1	?	?	?	1	0
?	1	?	1	?	0
?	1	?	?	1	0
?	?	1	1	?	0
?	?	1	?	1	0

FUNCTIONAL SCHEMATIC

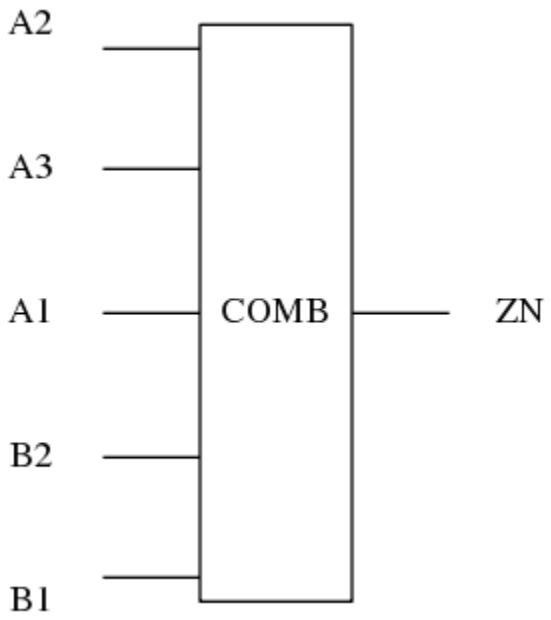

PIN CAPACITANCE (pf)

Pin	Type	Capacitance (pf)
A2	input	0.0274
A3	input	0.0266
A1	input	0.0270
B2	input	0.0275
B1	input	0.0277

DELAY AND OUTPUT TRANSITION TIME corresponding to min slew and load

Input Pin	Output	When Condition	Tin (ns)	Out Load (pf)	Delay (ns)	Tout (ns)
A2(HL)	ZN(LH)	!A1&!A3&!B1&B2	0.0100	0.0010	0.3323	0.2766
A2(HL)	ZN(LH)	!A1&!A3&B1&!B2	0.0100	0.0010	0.3121	0.2111
A2(HL)	ZN(LH)	!A1&!A3&B1&B2	0.0100	0.0010	0.3480	0.2382
A2(LH)	ZN(HL)	!A1&!A3&!B1&B2	0.0100	0.0010	0.1320	0.0629
A2(LH)	ZN(HL)	!A1&!A3&B1&!B2	0.0100	0.0010	0.1070	0.0480
A2(LH)	ZN(HL)	!A1&!A3&B1&B2	0.0100	0.0010	0.0894	0.0452
A3(LH)	ZN(HL)	!A1&!A2&!B1&B2	0.0100	0.0010	0.1397	0.0747
A3(LH)	ZN(HL)	!A1&!A2&B1&!B2	0.0100	0.0010	0.1112	0.0582
A3(LH)	ZN(HL)	!A1&!A2&B1&B2	0.0100	0.0010	0.0907	0.0533
A3(HL)	ZN(LH)	!A1&!A2&!B1&B2	0.0100	0.0010	0.3555	0.2767

continues on next page

Table 256 – continued from previous page

A3(HL)	ZN(LH)	!A1&!A2&B1&!B2	0.0100	0.0010	0.3355	0.2113
A3(HL)	ZN(LH)	!A1&!A2&B1&B2	0.0100	0.0010	0.3713	0.2381
A1(HL)	ZN(LH)	!A2&!A3&!B1&B2	0.0100	0.0010	0.2589	0.2760
A1(HL)	ZN(LH)	!A2&!A3&B1&!B2	0.0100	0.0010	0.2390	0.2104
A1(HL)	ZN(LH)	!A2&!A3&B1&B2	0.0100	0.0010	0.2747	0.2375
A1(LH)	ZN(HL)	!A2&!A3&!B1&B2	0.0100	0.0010	0.1049	0.0449
A1(LH)	ZN(HL)	!A2&!A3&B1&!B2	0.0100	0.0010	0.0835	0.0306
A1(LH)	ZN(HL)	!A2&!A3&B1&B2	0.0100	0.0010	0.0723	0.0316
B2(HL)	ZN(LH)	!A1&!A2&A3&!B1	0.0100	0.0010	0.1222	0.1235
B2(HL)	ZN(LH)	!A1&A2&!A3&!B1	0.0100	0.0010	0.1222	0.1115
B2(HL)	ZN(LH)	!A1&A2&A3&!B1	0.0100	0.0010	0.1214	0.1116
B2(HL)	ZN(LH)	A1&!A2&!A3&!B1	0.0100	0.0010	0.1139	0.0661
B2(HL)	ZN(LH)	A1&!A2&A3&!B1	0.0100	0.0010	0.1130	0.0661
B2(HL)	ZN(LH)	A1&A2&!A3&!B1	0.0100	0.0010	0.1130	0.0661
B2(HL)	ZN(LH)	A1&A2&A3&!B1	0.0100	0.0010	0.1125	0.0661
B2(LH)	ZN(HL)	!A1&!A2&A3&!B1	0.0100	0.0010	0.1062	0.0738
B2(LH)	ZN(HL)	!A1&A2&!A3&!B1	0.0100	0.0010	0.0962	0.0628
B2(LH)	ZN(HL)	!A1&A2&A3&!B1	0.0100	0.0010	0.0800	0.0481
B2(LH)	ZN(HL)	A1&!A2&!A3&!B1	0.0100	0.0010	0.0687	0.0448
B2(LH)	ZN(HL)	A1&!A2&A3&!B1	0.0100	0.0010	0.0584	0.0346
B2(LH)	ZN(HL)	A1&A2&!A3&!B1	0.0100	0.0010	0.0584	0.0346
B2(LH)	ZN(HL)	A1&A2&A3&!B1	0.0100	0.0010	0.0551	0.0317
B1(HL)	ZN(LH)	!A1&!A2&A3&!B2	0.0100	0.0010	0.0978	0.1232
B1(HL)	ZN(LH)	!A1&A2&!A3&!B2	0.0100	0.0010	0.0978	0.1112
B1(HL)	ZN(LH)	!A1&A2&A3&!B2	0.0100	0.0010	0.0969	0.1111
B1(HL)	ZN(LH)	A1&!A2&!A3&!B2	0.0100	0.0010	0.0896	0.0655
B1(HL)	ZN(LH)	A1&!A2&A3&!B2	0.0100	0.0010	0.0886	0.0656
B1(HL)	ZN(LH)	A1&A2&!A3&!B2	0.0100	0.0010	0.0886	0.0656
B1(HL)	ZN(LH)	A1&A2&A3&!B2	0.0100	0.0010	0.0881	0.0656
B1(LH)	ZN(HL)	!A1&!A2&A3&!B2	0.0100	0.0010	0.0795	0.0571
B1(LH)	ZN(HL)	!A1&A2&!A3&!B2	0.0100	0.0010	0.0733	0.0473
B1(LH)	ZN(HL)	!A1&A2&A3&!B2	0.0100	0.0010	0.0620	0.0357
B1(LH)	ZN(HL)	A1&!A2&!A3&!B2	0.0100	0.0010	0.0502	0.0289
B1(LH)	ZN(HL)	A1&!A2&A3&!B2	0.0100	0.0010	0.0445	0.0227
B1(LH)	ZN(HL)	A1&A2&!A3&!B2	0.0100	0.0010	0.0445	0.0227
B1(LH)	ZN(HL)	A1&A2&A3&!B2	0.0100	0.0010	0.0425	0.0210

DYNAMIC ENERGY

Input Pin	When Condition	Tin (ns)	Output	Out Load (pf)	Energy (uW/MHz)
A1	!A2&!A3&!B1&B2	0.0100	ZN(LH)	0.0010	1.5008
A1	!A2&!A3&B1&!B2	0.0100	ZN(LH)	0.0010	1.3223
A1	!A2&!A3&B1&B2	0.0100	ZN(LH)	0.0010	1.4668
B2	!A1&!A2&A3&!B1	0.0100	ZN(LH)	0.0010	1.2884
B2	!A1&A2&!A3&!B1	0.0100	ZN(LH)	0.0010	1.1148
B2	!A1&A2&A3&!B1	0.0100	ZN(LH)	0.0010	1.1110
B2	A1&!A2&!A3&!B1	0.0100	ZN(LH)	0.0010	0.8684

continues on next page

Table 257 – continued from previous page

B2	A1&!A2&A3&!B1	0.0100	ZN(LH)	0.0010	0.8644
B2	A1&A2&!A3&!B1	0.0100	ZN(LH)	0.0010	0.8644
B2	A1&A2&A3&!B1	0.0100	ZN(LH)	0.0010	0.8622
B1	!A1&!A2&A3&!B2	0.0100	ZN(LH)	0.0010	1.1098
B1	!A1&A2&!A3&!B2	0.0100	ZN(LH)	0.0010	0.9361
B1	!A1&A2&A3&!B2	0.0100	ZN(LH)	0.0010	0.9315
B1	A1&!A2&!A3&!B2	0.0100	ZN(LH)	0.0010	0.6899
B1	A1&!A2&A3&!B2	0.0100	ZN(LH)	0.0010	0.6851
B1	A1&A2&!A3&!B2	0.0100	ZN(LH)	0.0010	0.6851
B1	A1&A2&A3&!B2	0.0100	ZN(LH)	0.0010	0.6825
A2	!A1&!A3&!B1&B2	0.0100	ZN(LH)	0.0010	1.7467
A2	!A1&!A3&B1&!B2	0.0100	ZN(LH)	0.0010	1.5690
A2	!A1&!A3&B1&B2	0.0100	ZN(LH)	0.0010	1.7131
B1	!A1&!A2&A3&!B2	0.0100	ZN(HL)	0.0010	0.3511
B1	!A1&A2&!A3&!B2	0.0100	ZN(HL)	0.0010	0.2037
B1	!A1&A2&A3&!B2	0.0100	ZN(HL)	0.0010	0.2042
B1	A1&!A2&!A3&!B2	0.0100	ZN(HL)	0.0010	0.0355
B1	A1&!A2&A3&!B2	0.0100	ZN(HL)	0.0010	0.0357
B1	A1&A2&!A3&!B2	0.0100	ZN(HL)	0.0010	0.0357
B1	A1&A2&A3&!B2	0.0100	ZN(HL)	0.0010	0.0353
A3	!A1&!A2&!B1&B2	0.0100	ZN(HL)	0.0010	0.4797
A3	!A1&!A2&B1&!B2	0.0100	ZN(HL)	0.0010	0.3301
A3	!A1&!A2&B1&B2	0.0100	ZN(HL)	0.0010	0.3303
A1	!A2&!A3&!B1&B2	0.0100	ZN(HL)	0.0010	0.1880
A1	!A2&!A3&B1&!B2	0.0100	ZN(HL)	0.0010	0.0317
A1	!A2&!A3&B1&B2	0.0100	ZN(HL)	0.0010	0.0329
B2	!A1&!A2&A3&!B1	0.0100	ZN(HL)	0.0010	0.4825
B2	!A1&A2&!A3&!B1	0.0100	ZN(HL)	0.0010	0.3359
B2	!A1&A2&A3&!B1	0.0100	ZN(HL)	0.0010	0.3355
B2	A1&!A2&!A3&!B1	0.0100	ZN(HL)	0.0010	0.1712
B2	A1&!A2&A3&!B1	0.0100	ZN(HL)	0.0010	0.1714
B2	A1&A2&!A3&!B1	0.0100	ZN(HL)	0.0010	0.1714
B2	A1&A2&A3&!B1	0.0100	ZN(HL)	0.0010	0.1714
A2	!A1&!A3&!B1&B2	0.0100	ZN(HL)	0.0010	0.3499
A2	!A1&!A3&B1&!B2	0.0100	ZN(HL)	0.0010	0.2001
A2	!A1&!A3&B1&B2	0.0100	ZN(HL)	0.0010	0.1999
A3	!A1&!A2&!B1&B2	0.0100	ZN(LH)	0.0010	1.9210
A3	!A1&!A2&B1&!B2	0.0100	ZN(LH)	0.0010	1.7428
A3	!A1&!A2&B1&B2	0.0100	ZN(LH)	0.0010	1.8869
A3(LH)	!A1&!A2&!B1&!B2	0.0100	n/a	n/a	-0.2375
A3(LH)	!A1&A2&!B1&!B2	0.0100	n/a	n/a	-0.2309
A3(LH)	A1&!A2&!B1&!B2	0.0100	n/a	n/a	-0.1995
A3(LH)	A1&A2&!B1&!B2	0.0100	n/a	n/a	-0.2225
A3(LH)	!A1&A2&!B1&B2	0.0100	n/a	n/a	-0.2077
A3(LH)	!A1&A2&B1&!B2	0.0100	n/a	n/a	-0.2077
A3(LH)	!A1&A2&B1&B2	0.0100	n/a	n/a	-0.2077
A3(LH)	A1&!A2&!B1&B2	0.0100	n/a	n/a	-0.1955
A3(LH)	A1&!A2&B1&!B2	0.0100	n/a	n/a	-0.1955
A3(LH)	A1&!A2&B1&B2	0.0100	n/a	n/a	-0.1954
A3(LH)	A1&A2&!B1&B2	0.0100	n/a	n/a	-0.2224
A3(LH)	A1&A2&B1&!B2	0.0100	n/a	n/a	-0.2224
A3(LH)	A1&A2&B1&B2	0.0100	n/a	n/a	-0.2224

continues on next page

Table 257 – continued from previous page

A1(LH)	!A2&!A3&!B1&!B2	0.0100	n/a	n/a	-0.2392
A1(LH)	!A2&A3&!B1&!B2	0.0100	n/a	n/a	-0.2001
A1(LH)	A2&!A3&!B1&!B2	0.0100	n/a	n/a	-0.2244
A1(LH)	A2&A3&!B1&!B2	0.0100	n/a	n/a	-0.2188
A1(LH)	!A2&A3&!B1&B2	0.0100	n/a	n/a	-0.0633
A1(LH)	!A2&A3&B1&!B2	0.0100	n/a	n/a	-0.0633
A1(LH)	!A2&A3&B1&B2	0.0100	n/a	n/a	-0.0633
A1(LH)	A2&!A3&!B1&B2	0.0100	n/a	n/a	-0.0624
A1(LH)	A2&!A3&B1&!B2	0.0100	n/a	n/a	-0.0624
A1(LH)	A2&!A3&B1&B2	0.0100	n/a	n/a	-0.0624
A1(LH)	A2&A3&!B1&B2	0.0100	n/a	n/a	-0.0624
A1(LH)	A2&A3&B1&!B2	0.0100	n/a	n/a	-0.0624
A1(LH)	A2&A3&B1&B2	0.0100	n/a	n/a	-0.0624
A2(LH)	!A1&!A3&!B1&!B2	0.0100	n/a	n/a	-0.2387
A2(LH)	!A1&A3&!B1&!B2	0.0100	n/a	n/a	-0.2320
A2(LH)	A1&!A3&!B1&!B2	0.0100	n/a	n/a	-0.2231
A2(LH)	A1&A3&!B1&!B2	0.0100	n/a	n/a	-0.2146
A2(LH)	!A1&A3&!B1&B2	0.0100	n/a	n/a	-0.0734
A2(LH)	!A1&A3&B1&!B2	0.0100	n/a	n/a	-0.0734
A2(LH)	!A1&A3&B1&B2	0.0100	n/a	n/a	-0.0733
A2(LH)	A1&!A3&!B1&B2	0.0100	n/a	n/a	-0.1877
A2(LH)	A1&!A3&B1&!B2	0.0100	n/a	n/a	-0.1877
A2(LH)	A1&!A3&B1&B2	0.0100	n/a	n/a	-0.1877
A2(LH)	A1&A3&!B1&B2	0.0100	n/a	n/a	-0.1644
A2(LH)	A1&A3&B1&!B2	0.0100	n/a	n/a	-0.1644
A2(LH)	A1&A3&B1&B2	0.0100	n/a	n/a	-0.1644
A3(HL)	!A1&!A2&!B1&!B2	0.0100	n/a	n/a	0.2610
A3(HL)	!A1&A2&!B1&!B2	0.0100	n/a	n/a	0.2385
A3(HL)	A1&!A2&!B1&!B2	0.0100	n/a	n/a	0.2378
A3(HL)	A1&A2&!B1&!B2	0.0100	n/a	n/a	0.2384
A3(HL)	!A1&A2&!B1&B2	0.0100	n/a	n/a	0.2384
A3(HL)	!A1&A2&B1&!B2	0.0100	n/a	n/a	0.2384
A3(HL)	!A1&A2&B1&B2	0.0100	n/a	n/a	0.2384
A3(HL)	A1&!A2&!B1&B2	0.0100	n/a	n/a	0.2379
A3(HL)	A1&!A2&B1&!B2	0.0100	n/a	n/a	0.2378
A3(HL)	A1&!A2&B1&B2	0.0100	n/a	n/a	0.2377
A3(HL)	A1&A2&!B1&B2	0.0100	n/a	n/a	0.2384
A3(HL)	A1&A2&B1&!B2	0.0100	n/a	n/a	0.2384
A3(HL)	A1&A2&B1&B2	0.0100	n/a	n/a	0.2384
A2(HL)	!A1&!A3&!B1&!B2	0.0100	n/a	n/a	0.2611
A2(HL)	!A1&A3&!B1&!B2	0.0100	n/a	n/a	0.2381
A2(HL)	A1&!A3&!B1&!B2	0.0100	n/a	n/a	0.2380
A2(HL)	A1&A3&!B1&!B2	0.0100	n/a	n/a	0.1316
A2(HL)	!A1&A3&!B1&B2	0.0100	n/a	n/a	0.1508
A2(HL)	!A1&A3&B1&!B2	0.0100	n/a	n/a	0.1507
A2(HL)	!A1&A3&B1&B2	0.0100	n/a	n/a	0.1507
A2(HL)	A1&!A3&!B1&B2	0.0100	n/a	n/a	0.2380
A2(HL)	A1&!A3&B1&!B2	0.0100	n/a	n/a	0.2380
A2(HL)	A1&!A3&B1&B2	0.0100	n/a	n/a	0.2380
A2(HL)	A1&A3&!B1&B2	0.0100	n/a	n/a	0.1316
A2(HL)	A1&A3&B1&!B2	0.0100	n/a	n/a	0.1316
A2(HL)	A1&A3&B1&B2	0.0100	n/a	n/a	0.1314

continues on next page

Table 257 – continued from previous page

B1(HL)	!A1&!A2&!A3&!B2	0.0100	n/a	n/a	0.2684
B1(HL)	!A1&!A2&!A3&B2	0.0100	n/a	n/a	0.2732
B1(HL)	!A1&!A2&A3&B2	0.0100	n/a	n/a	0.1612
B1(HL)	!A1&A2&!A3&B2	0.0100	n/a	n/a	0.1612
B1(HL)	!A1&A2&A3&B2	0.0100	n/a	n/a	0.1611
B1(HL)	A1&!A2&!A3&B2	0.0100	n/a	n/a	0.1612
B1(HL)	A1&!A2&A3&B2	0.0100	n/a	n/a	0.1611
B1(HL)	A1&A2&!A3&B2	0.0100	n/a	n/a	0.1611
B1(HL)	A1&A2&A3&B2	0.0100	n/a	n/a	0.1611
B2(LH)	!A1&!A2&!A3&!B1	0.0100	n/a	n/a	0.1960
B2(LH)	!A1&!A2&!A3&B1	0.0100	n/a	n/a	-0.2598
B2(LH)	!A1&!A2&A3&B1	0.0100	n/a	n/a	-0.1990
B2(LH)	!A1&A2&!A3&B1	0.0100	n/a	n/a	-0.1990
B2(LH)	!A1&A2&A3&B1	0.0100	n/a	n/a	-0.1988
B2(LH)	A1&!A2&!A3&B1	0.0100	n/a	n/a	-0.1990
B2(LH)	A1&!A2&A3&B1	0.0100	n/a	n/a	-0.1988
B2(LH)	A1&A2&!A3&B1	0.0100	n/a	n/a	-0.1989
B2(LH)	A1&A2&A3&B1	0.0100	n/a	n/a	-0.1987
B2(HL)	!A1&!A2&!A3&!B1	0.0100	n/a	n/a	0.2676
B2(HL)	!A1&!A2&!A3&B1	0.0100	n/a	n/a	0.2732
B2(HL)	!A1&!A2&A3&B1	0.0100	n/a	n/a	0.2382
B2(HL)	!A1&A2&!A3&B1	0.0100	n/a	n/a	0.2382
B2(HL)	!A1&A2&A3&B1	0.0100	n/a	n/a	0.2382
B2(HL)	A1&!A2&!A3&B1	0.0100	n/a	n/a	0.2381
B2(HL)	A1&!A2&A3&B1	0.0100	n/a	n/a	0.2381
B2(HL)	A1&A2&!A3&B1	0.0100	n/a	n/a	0.2381
B2(HL)	A1&A2&A3&B1	0.0100	n/a	n/a	0.2382
A1(HL)	!A2&!A3&!B1&!B2	0.0100	n/a	n/a	0.2618
A1(HL)	!A2&A3&!B1&!B2	0.0100	n/a	n/a	0.2385
A1(HL)	A2&!A3&!B1&!B2	0.0100	n/a	n/a	0.2385
A1(HL)	A2&A3&!B1&!B2	0.0100	n/a	n/a	0.2384
A1(HL)	!A2&A3&!B1&B2	0.0100	n/a	n/a	0.3231
A1(HL)	!A2&A3&B1&!B2	0.0100	n/a	n/a	0.3231
A1(HL)	!A2&A3&B1&B2	0.0100	n/a	n/a	0.3232
A1(HL)	A2&!A3&!B1&B2	0.0100	n/a	n/a	0.1755
A1(HL)	A2&!A3&B1&!B2	0.0100	n/a	n/a	0.1755
A1(HL)	A2&!A3&B1&B2	0.0100	n/a	n/a	0.1755
A1(HL)	A2&A3&!B1&B2	0.0100	n/a	n/a	0.1754
A1(HL)	A2&A3&B1&!B2	0.0100	n/a	n/a	0.1755
A1(HL)	A2&A3&B1&B2	0.0100	n/a	n/a	0.1755
B1(LH)	!A1&!A2&!A3&!B2	0.0100	n/a	n/a	0.1939
B1(LH)	!A1&!A2&!A3&B2	0.0100	n/a	n/a	-0.2618
B1(LH)	!A1&!A2&A3&B2	0.0100	n/a	n/a	-0.0675
B1(LH)	!A1&A2&!A3&B2	0.0100	n/a	n/a	-0.0675
B1(LH)	!A1&A2&A3&B2	0.0100	n/a	n/a	-0.0675
B1(LH)	A1&!A2&!A3&B2	0.0100	n/a	n/a	-0.0675
B1(LH)	A1&!A2&A3&B2	0.0100	n/a	n/a	-0.0675
B1(LH)	A1&A2&!A3&B2	0.0100	n/a	n/a	-0.0675
B1(LH)	A1&A2&A3&B2	0.0100	n/a	n/a	-0.0675

LEAKAGE POWER

When Condition	Power (nW)
!A1&!A2&!A3&!B1&!B2	0.2523
!A1&!A2&!A3&!B1&B2	0.6494
!A1&!A2&!A3&B1&!B2	0.6494
!A1&!A2&!A3&B1&B2	0.6514
!A1&!A2&A3&!B1&!B2	0.2547
!A1&A2&!A3&!B1&!B2	0.2547
!A1&A2&A3&!B1&!B2	0.2547
A1&!A2&!A3&!B1&!B2	0.2547
A1&!A2&A3&!B1&!B2	0.2544
A1&A2&!A3&!B1&!B2	0.2544
A1&A2&A3&!B1&!B2	0.2544
!A1&!A2&A3&!B1&B2	0.6896
!A1&!A2&A3&B1&!B2	0.5478
!A1&!A2&A3&B1&B2	0.5478
!A1&A2&!A3&!B1&B2	0.5485
!A1&A2&!A3&B1&!B2	0.4067
!A1&A2&!A3&B1&B2	0.4067
!A1&A2&A3&!B1&B2	0.5485
!A1&A2&A3&B1&!B2	0.4067
!A1&A2&A3&B1&B2	0.4067
A1&!A2&!A3&!B1&B2	0.4067
A1&!A2&!A3&B1&!B2	0.2649
A1&!A2&!A3&B1&B2	0.2649
A1&!A2&A3&!B1&B2	0.4064
A1&!A2&A3&B1&!B2	0.2646
A1&!A2&A3&B1&B2	0.2646
A1&A2&!A3&!B1&B2	0.4064
A1&A2&!A3&B1&!B2	0.2646
A1&A2&!A3&B1&B2	0.2646
A1&A2&A3&!B1&B2	0.4064
A1&A2&A3&B1&!B2	0.2646
A1&A2&A3&B1&B2	0.2646

gf180mcu_fd_sc_mcu9t5v0__oai33_1

gf180mcu_fd_sc_mcu9t5v0__oai33_1 symbol

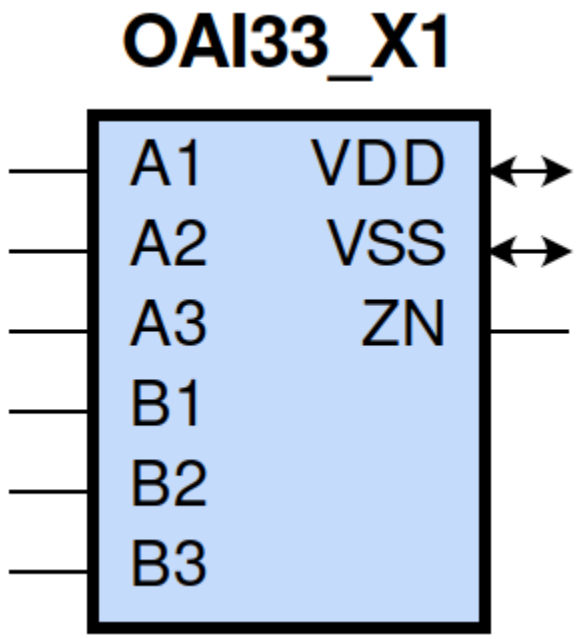

gf180mcu_fd_sc_mcu9t5v0__oai33_1 schematic

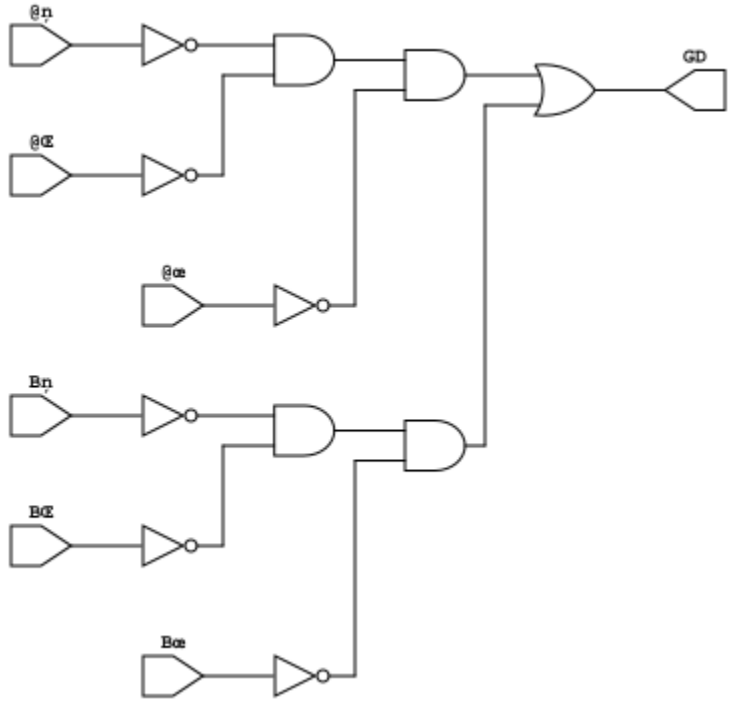

gf180mcu_fd_sc_mcu9t5v0__oai33_1 layout

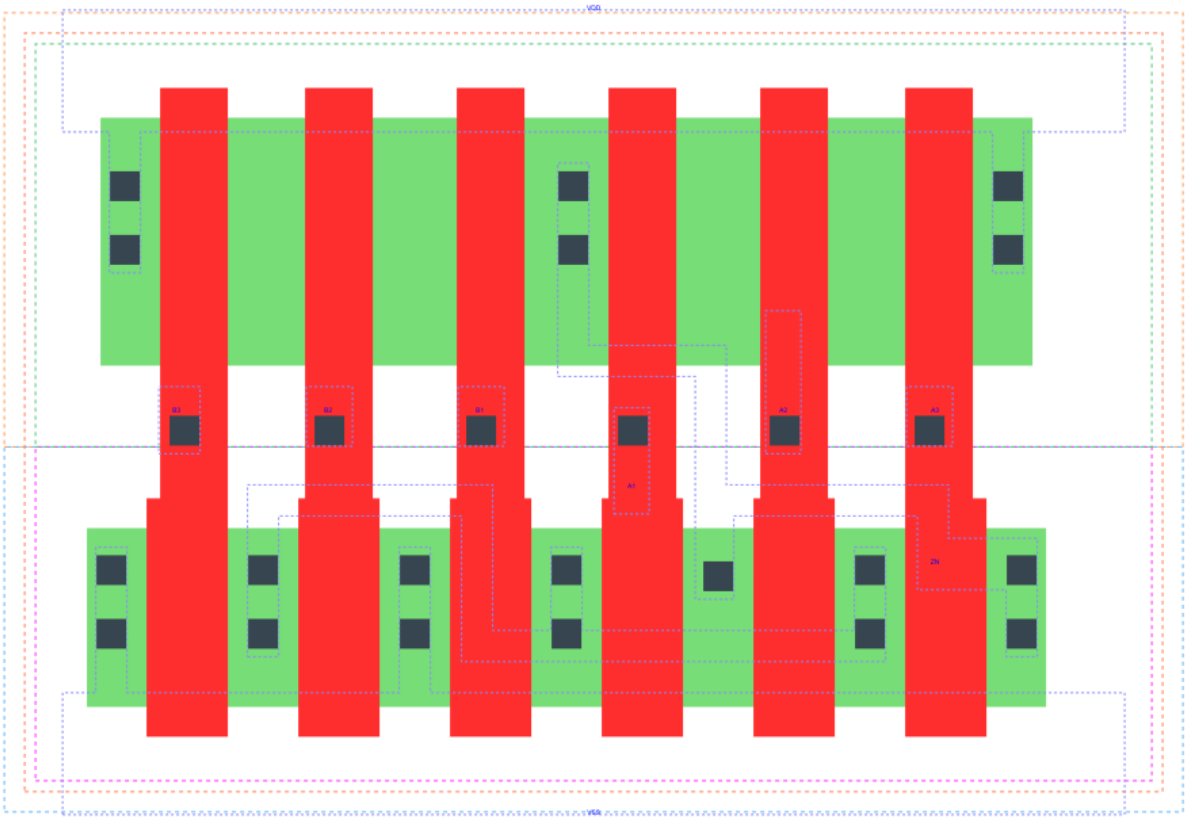

OAI33_X1 is a three 2-input OR into 2-input NAND with 1X drive strength

Attributes

Attribute	Value
area	39.513600 μm^2

OUTPUT FUNCTIONS

Output Pin	Function
ZN	(((!A1)&(!A2)&(!A3))|((!B1)&(!B2)&(!B3)))

TRUTH TABLE FOR ZN

A1	A2	A3	B1	B2	B3	ZN
0	0	0	?	?	?	1
?	?	?	0	0	0	1
1	?	?	1	?	?	0
1	?	?	?	1	?	0
1	?	?	?	?	1	0
?	1	?	1	?	?	0
?	1	?	?	1	?	0
?	1	?	?	?	1	0
?	?	1	1	?	?	0
?	?	1	?	1	?	0
?	?	1	?	?	1	0

FUNCTIONAL SCHEMATIC

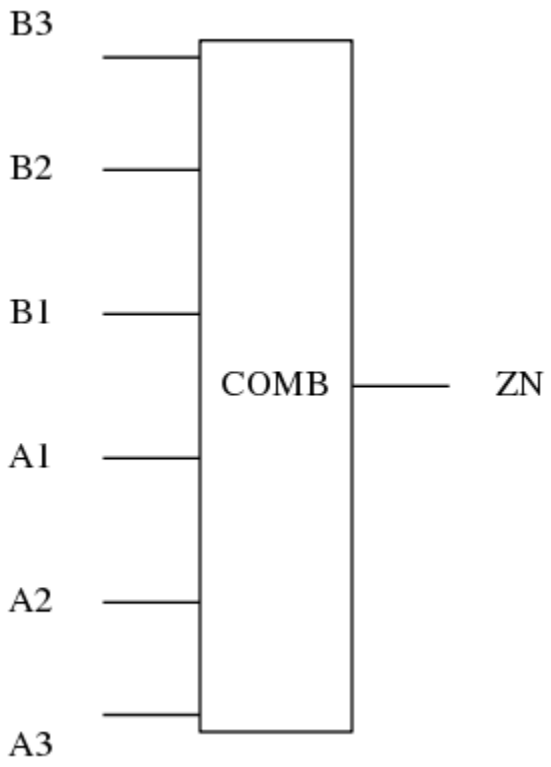

PIN CAPACITANCE (pf)

Pin	Type	Capacitance (pf)
B3	input	0.0064
B2	input	0.0065
B1	input	0.0068
A1	input	0.0070
A2	input	0.0066
A3	input	0.0065

DELAY AND OUTPUT TRANSITION TIME corresponding to min slew and load

Input Pin	Output	When Condition	Tin (ns)	Out Load (pf)	Delay (ns)	Tout (ns)
B3(HL)	ZN(LH)	!A1&!A2&A3&!B1&!B2	0.0100	0.0010	0.3972	0.3668
B3(HL)	ZN(LH)	!A1&A2&!A3&!B1&!B2	0.0100	0.0010	0.3962	0.3141
B3(HL)	ZN(LH)	!A1&A2&A3&!B1&!B2	0.0100	0.0010	0.4315	0.3406
B3(HL)	ZN(LH)	A1&!A2&!A3&!B1&!B2	0.0100	0.0010	0.3755	0.2489
B3(HL)	ZN(LH)	A1&!A2&A3&!B1&!B2	0.0100	0.0010	0.4116	0.2762
B3(HL)	ZN(LH)	A1&A2&!A3&!B1&!B2	0.0100	0.0010	0.4115	0.2763
B3(HL)	ZN(LH)	A1&A2&A3&!B1&!B2	0.0100	0.0010	0.4442	0.3029
B3(LH)	ZN(HL)	!A1&!A2&A3&!B1&!B2	0.0100	0.0010	0.1685	0.0967
B3(LH)	ZN(HL)	!A1&A2&!A3&!B1&!B2	0.0100	0.0010	0.1539	0.0835
B3(LH)	ZN(HL)	!A1&A2&A3&!B1&!B2	0.0100	0.0010	0.1232	0.0725
B3(LH)	ZN(HL)	A1&!A2&!A3&!B1&!B2	0.0100	0.0010	0.1265	0.0674
B3(LH)	ZN(HL)	A1&!A2&A3&!B1&!B2	0.0100	0.0010	0.1030	0.0604
B3(LH)	ZN(HL)	A1&A2&!A3&!B1&!B2	0.0100	0.0010	0.1030	0.0605
B3(LH)	ZN(HL)	A1&A2&A3&!B1&!B2	0.0100	0.0010	0.0997	0.0673
B2(HL)	ZN(LH)	!A1&!A2&A3&!B1&!B3	0.0100	0.0010	0.3745	0.3668
B2(HL)	ZN(LH)	!A1&A2&!A3&!B1&!B3	0.0100	0.0010	0.3733	0.3141
B2(HL)	ZN(LH)	!A1&A2&A3&!B1&!B3	0.0100	0.0010	0.4085	0.3407
B2(HL)	ZN(LH)	A1&!A2&!A3&!B1&!B3	0.0100	0.0010	0.3527	0.2491
B2(HL)	ZN(LH)	A1&!A2&A3&!B1&!B3	0.0100	0.0010	0.3884	0.2762
B2(HL)	ZN(LH)	A1&A2&!A3&!B1&!B3	0.0100	0.0010	0.3884	0.2762
B2(HL)	ZN(LH)	A1&A2&A3&!B1&!B3	0.0100	0.0010	0.4211	0.3027
B2(LH)	ZN(HL)	!A1&!A2&A3&!B1&!B3	0.0100	0.0010	0.1557	0.0829
B2(LH)	ZN(HL)	!A1&A2&!A3&!B1&!B3	0.0100	0.0010	0.1439	0.0709
B2(LH)	ZN(HL)	!A1&A2&A3&!B1&!B3	0.0100	0.0010	0.1177	0.0628
B2(LH)	ZN(HL)	A1&!A2&!A3&!B1&!B3	0.0100	0.0010	0.1197	0.0557
B2(LH)	ZN(HL)	A1&!A2&A3&!B1&!B3	0.0100	0.0010	0.0998	0.0512
B2(LH)	ZN(HL)	A1&A2&!A3&!B1&!B3	0.0100	0.0010	0.0998	0.0512
B2(LH)	ZN(HL)	A1&A2&A3&!B1&!B3	0.0100	0.0010	0.0967	0.0578
B1(LH)	ZN(HL)	!A1&!A2&A3&!B2&!B3	0.0100	0.0010	0.1291	0.0667
B1(LH)	ZN(HL)	!A1&A2&!A3&!B2&!B3	0.0100	0.0010	0.1205	0.0557
B1(LH)	ZN(HL)	!A1&A2&A3&!B2&!B3	0.0100	0.0010	0.1004	0.0511
B1(LH)	ZN(HL)	A1&!A2&!A3&!B2&!B3	0.0100	0.0010	0.0983	0.0407
B1(LH)	ZN(HL)	A1&!A2&A3&!B2&!B3	0.0100	0.0010	0.0841	0.0396
B1(LH)	ZN(HL)	A1&A2&!A3&!B2&!B3	0.0100	0.0010	0.0842	0.0396
B1(LH)	ZN(HL)	A1&A2&A3&!B2&!B3	0.0100	0.0010	0.0815	0.0462
B1(HL)	ZN(LH)	!A1&!A2&A3&!B2&!B3	0.0100	0.0010	0.3177	0.3666

continues on next page

Table 259 – continued from previous page

B1(HL)	ZN(LH)	!A1&A2&!A3&!B2&!B3	0.0100	0.0010	0.3167	0.3138
B1(HL)	ZN(LH)	!A1&A2&A3&!B2&!B3	0.0100	0.0010	0.3519	0.3406
B1(HL)	ZN(LH)	A1&!A2&!A3&!B2&!B3	0.0100	0.0010	0.2963	0.2485
B1(HL)	ZN(LH)	A1&!A2&A3&!B2&!B3	0.0100	0.0010	0.3320	0.2761
B1(HL)	ZN(LH)	A1&A2&!A3&!B2&!B3	0.0100	0.0010	0.3320	0.2761
B1(HL)	ZN(LH)	A1&A2&A3&!B2&!B3	0.0100	0.0010	0.3646	0.3030
A1(HL)	ZN(LH)	!A2&!A3&!B1&!B2&B3	0.0100	0.0010	0.1685	0.2406
A1(HL)	ZN(LH)	!A2&!A3&!B1&B2&!B3	0.0100	0.0010	0.1684	0.1974
A1(HL)	ZN(LH)	!A2&!A3&!B1&B2&B3	0.0100	0.0010	0.1669	0.1973
A1(HL)	ZN(LH)	!A2&!A3&B1&!B2&!B3	0.0100	0.0010	0.1535	0.1351
A1(HL)	ZN(LH)	!A2&!A3&B1&!B2&B3	0.0100	0.0010	0.1522	0.1351
A1(HL)	ZN(LH)	!A2&!A3&B1&B2&!B3	0.0100	0.0010	0.1522	0.1351
A1(HL)	ZN(LH)	!A2&!A3&B1&B2&B3	0.0100	0.0010	0.1514	0.1351
A1(LH)	ZN(HL)	!A2&!A3&!B1&!B2&B3	0.0100	0.0010	0.0915	0.0666
A1(LH)	ZN(HL)	!A2&!A3&!B1&B2&!B3	0.0100	0.0010	0.0831	0.0551
A1(LH)	ZN(HL)	!A2&!A3&!B1&B2&B3	0.0100	0.0010	0.0708	0.0426
A1(LH)	ZN(HL)	!A2&!A3&B1&!B2&!B3	0.0100	0.0010	0.0613	0.0392
A1(LH)	ZN(HL)	!A2&!A3&B1&!B2&B3	0.0100	0.0010	0.0539	0.0308
A1(LH)	ZN(HL)	!A2&!A3&B1&B2&!B3	0.0100	0.0010	0.0539	0.0308
A1(LH)	ZN(HL)	!A2&!A3&B1&B2&B3	0.0100	0.0010	0.0513	0.0286
A2(HL)	ZN(LH)	!A1&!A3&!B1&!B2&B3	0.0100	0.0010	0.2252	0.2423
A2(HL)	ZN(LH)	!A1&!A3&!B1&B2&!B3	0.0100	0.0010	0.2251	0.1988
A2(HL)	ZN(LH)	!A1&!A3&!B1&B2&B3	0.0100	0.0010	0.2237	0.1988
A2(HL)	ZN(LH)	!A1&!A3&B1&!B2&!B3	0.0100	0.0010	0.2103	0.1370
A2(HL)	ZN(LH)	!A1&!A3&B1&!B2&B3	0.0100	0.0010	0.2089	0.1370
A2(HL)	ZN(LH)	!A1&!A3&B1&B2&!B3	0.0100	0.0010	0.2090	0.1369
A2(HL)	ZN(LH)	!A1&!A3&B1&B2&B3	0.0100	0.0010	0.2082	0.1370
A2(LH)	ZN(HL)	!A1&!A3&!B1&!B2&B3	0.0100	0.0010	0.1184	0.0828
A2(LH)	ZN(HL)	!A1&!A3&!B1&B2&!B3	0.0100	0.0010	0.1065	0.0707
A2(LH)	ZN(HL)	!A1&!A3&!B1&B2&B3	0.0100	0.0010	0.0892	0.0550
A2(LH)	ZN(HL)	!A1&!A3&B1&!B2&!B3	0.0100	0.0010	0.0822	0.0555
A2(LH)	ZN(HL)	!A1&!A3&B1&!B2&B3	0.0100	0.0010	0.0699	0.0431
A2(LH)	ZN(HL)	!A1&!A3&B1&B2&!B3	0.0100	0.0010	0.0699	0.0431
A2(LH)	ZN(HL)	!A1&!A3&B1&B2&B3	0.0100	0.0010	0.0660	0.0400
A3(HL)	ZN(LH)	!A1&!A2&!B1&!B2&B3	0.0100	0.0010	0.2478	0.2425
A3(HL)	ZN(LH)	!A1&!A2&!B1&B2&!B3	0.0100	0.0010	0.2477	0.1990
A3(HL)	ZN(LH)	!A1&!A2&!B1&B2&B3	0.0100	0.0010	0.2466	0.1991
A3(HL)	ZN(LH)	!A1&!A2&B1&!B2&!B3	0.0100	0.0010	0.2328	0.1371
A3(HL)	ZN(LH)	!A1&!A2&B1&!B2&B3	0.0100	0.0010	0.2316	0.1371
A3(HL)	ZN(LH)	!A1&!A2&B1&B2&!B3	0.0100	0.0010	0.2316	0.1371
A3(HL)	ZN(LH)	!A1&!A2&B1&B2&B3	0.0100	0.0010	0.2308	0.1372
A3(LH)	ZN(HL)	!A1&!A2&!B1&!B2&B3	0.0100	0.0010	0.1310	0.0976
A3(LH)	ZN(HL)	!A1&!A2&!B1&B2&!B3	0.0100	0.0010	0.1157	0.0847
A3(LH)	ZN(HL)	!A1&!A2&!B1&B2&B3	0.0100	0.0010	0.0946	0.0646
A3(LH)	ZN(HL)	!A1&!A2&B1&!B2&!B3	0.0100	0.0010	0.0877	0.0687
A3(LH)	ZN(HL)	!A1&!A2&B1&!B2&B3	0.0100	0.0010	0.0722	0.0515
A3(LH)	ZN(HL)	!A1&!A2&B1&B2&!B3	0.0100	0.0010	0.0722	0.0515
A3(LH)	ZN(HL)	!A1&!A2&B1&B2&B3	0.0100	0.0010	0.0676	0.0472

DYNAMIC ENERGY

Input Pin	When Condition	Tin (ns)	Output	Out Load (pf)	Energy (uW/MHz)
A1	!A2&!A3&!B1&!B2&B3	0.0100	ZN(LH)	0.0010	0.3000
A1	!A2&!A3&!B1&B2&!B3	0.0100	ZN(LH)	0.0010	0.2565
A1	!A2&!A3&!B1&B2&B3	0.0100	ZN(LH)	0.0010	0.2553
A1	!A2&!A3&B1&!B2&!B3	0.0100	ZN(LH)	0.0010	0.2122
A1	!A2&!A3&B1&!B2&B3	0.0100	ZN(LH)	0.0010	0.2111
A1	!A2&!A3&B1&B2&!B3	0.0100	ZN(LH)	0.0010	0.2110
A1	!A2&!A3&B1&B2&B3	0.0100	ZN(LH)	0.0010	0.2104
B2	!A1&!A2&A3&!B1&!B3	0.0100	ZN(LH)	0.0010	0.5155
B2	!A1&A2&!A3&!B1&!B3	0.0100	ZN(LH)	0.0010	0.4724
B2	!A1&A2&A3&!B1&!B3	0.0100	ZN(LH)	0.0010	0.5083
B2	A1&!A2&!A3&!B1&!B3	0.0100	ZN(LH)	0.0010	0.4283
B2	A1&!A2&A3&!B1&!B3	0.0100	ZN(LH)	0.0010	0.4642
B2	A1&A2&!A3&!B1&!B3	0.0100	ZN(LH)	0.0010	0.4642
B2	A1&A2&A3&!B1&!B3	0.0100	ZN(LH)	0.0010	0.4996
B1	!A1&!A2&A3&!B2&!B3	0.0100	ZN(HL)	0.0010	0.0845
B1	!A1&A2&!A3&!B2&!B3	0.0100	ZN(HL)	0.0010	0.0478
B1	!A1&A2&A3&!B2&!B3	0.0100	ZN(HL)	0.0010	0.0480
B1	A1&!A2&!A3&!B2&!B3	0.0100	ZN(HL)	0.0010	0.0089
B1	A1&!A2&A3&!B2&!B3	0.0100	ZN(HL)	0.0010	0.0090
B1	A1&A2&!A3&!B2&!B3	0.0100	ZN(HL)	0.0010	0.0090
B1	A1&A2&A3&!B2&!B3	0.0100	ZN(HL)	0.0010	0.0090
A2	!A1&!A3&!B1&!B2&B3	0.0100	ZN(LH)	0.0010	0.3445
A2	!A1&!A3&!B1&B2&!B3	0.0100	ZN(LH)	0.0010	0.3010
A2	!A1&!A3&!B1&B2&B3	0.0100	ZN(LH)	0.0010	0.2999
A2	!A1&!A3&B1&!B2&!B3	0.0100	ZN(LH)	0.0010	0.2567
A2	!A1&!A3&B1&!B2&B3	0.0100	ZN(LH)	0.0010	0.2557
A2	!A1&!A3&B1&B2&!B3	0.0100	ZN(LH)	0.0010	0.2557
A2	!A1&!A3&B1&B2&B3	0.0100	ZN(LH)	0.0010	0.2550
B1	!A1&!A2&A3&!B2&!B3	0.0100	ZN(LH)	0.0010	0.4709
B1	!A1&A2&!A3&!B2&!B3	0.0100	ZN(LH)	0.0010	0.4277
B1	!A1&A2&A3&!B2&!B3	0.0100	ZN(LH)	0.0010	0.4638
B1	A1&!A2&!A3&!B2&!B3	0.0100	ZN(LH)	0.0010	0.3837
B1	A1&!A2&A3&!B2&!B3	0.0100	ZN(LH)	0.0010	0.4198
B1	A1&A2&!A3&!B2&!B3	0.0100	ZN(LH)	0.0010	0.4198
B1	A1&A2&A3&!B2&!B3	0.0100	ZN(LH)	0.0010	0.4552
B3	!A1&!A2&A3&!B1&!B2	0.0100	ZN(LH)	0.0010	0.5588
B3	!A1&A2&!A3&!B1&!B2	0.0100	ZN(LH)	0.0010	0.5157
B3	!A1&A2&A3&!B1&!B2	0.0100	ZN(LH)	0.0010	0.5518
B3	A1&!A2&!A3&!B1&!B2	0.0100	ZN(LH)	0.0010	0.4716
B3	A1&!A2&A3&!B1&!B2	0.0100	ZN(LH)	0.0010	0.5077
B3	A1&A2&!A3&!B1&!B2	0.0100	ZN(LH)	0.0010	0.5077
B3	A1&A2&A3&!B1&!B2	0.0100	ZN(LH)	0.0010	0.5431
A2	!A1&!A3&!B1&!B2&B3	0.0100	ZN(HL)	0.0010	0.1210
A2	!A1&!A3&!B1&B2&!B3	0.0100	ZN(HL)	0.0010	0.0847
A2	!A1&!A3&!B1&B2&B3	0.0100	ZN(HL)	0.0010	0.0847
A2	!A1&!A3&B1&!B2&!B3	0.0100	ZN(HL)	0.0010	0.0464
A2	!A1&!A3&B1&!B2&B3	0.0100	ZN(HL)	0.0010	0.0463
A2	!A1&!A3&B1&B2&!B3	0.0100	ZN(HL)	0.0010	0.0463
A2	!A1&!A3&B1&B2&B3	0.0100	ZN(HL)	0.0010	0.0463
B3	!A1&!A2&A3&!B1&!B2	0.0100	ZN(HL)	0.0010	0.1531
B3	!A1&A2&!A3&!B1&!B2	0.0100	ZN(HL)	0.0010	0.1167

continues on next page

Table 260 – continued from previous page

B3	!A1&A2&A3&!B1&!B2	0.0100	ZN(HL)	0.0010	0.1167
B3	A1&!A2&!A3&!B1&!B2	0.0100	ZN(HL)	0.0010	0.0787
B3	A1&!A2&A3&!B1&!B2	0.0100	ZN(HL)	0.0010	0.0786
B3	A1&A2&!A3&!B1&!B2	0.0100	ZN(HL)	0.0010	0.0787
B3	A1&A2&A3&!B1&!B2	0.0100	ZN(HL)	0.0010	0.0787
A3	!A1&!A2&!B1&!B2&B3	0.0100	ZN(LH)	0.0010	0.3876
A3	!A1&!A2&!B1&B2&!B3	0.0100	ZN(LH)	0.0010	0.3440
A3	!A1&!A2&!B1&B2&B3	0.0100	ZN(LH)	0.0010	0.3431
A3	!A1&!A2&B1&!B2&!B3	0.0100	ZN(LH)	0.0010	0.2998
A3	!A1&!A2&B1&!B2&B3	0.0100	ZN(LH)	0.0010	0.2988
A3	!A1&!A2&B1&B2&!B3	0.0100	ZN(LH)	0.0010	0.2988
A3	!A1&!A2&B1&B2&B3	0.0100	ZN(LH)	0.0010	0.2983
A3	!A1&!A2&!B1&!B2&B3	0.0100	ZN(HL)	0.0010	0.1536
A3	!A1&!A2&!B1&B2&!B3	0.0100	ZN(HL)	0.0010	0.1171
A3	!A1&!A2&!B1&B2&B3	0.0100	ZN(HL)	0.0010	0.1171
A3	!A1&!A2&B1&!B2&!B3	0.0100	ZN(HL)	0.0010	0.0790
A3	!A1&!A2&B1&!B2&B3	0.0100	ZN(HL)	0.0010	0.0790
A3	!A1&!A2&B1&B2&!B3	0.0100	ZN(HL)	0.0010	0.0790
A3	!A1&!A2&B1&B2&B3	0.0100	ZN(HL)	0.0010	0.0790
A1	!A2&!A3&!B1&!B2&B3	0.0100	ZN(HL)	0.0010	0.0848
A1	!A2&!A3&!B1&B2&!B3	0.0100	ZN(HL)	0.0010	0.0483
A1	!A2&!A3&!B1&B2&B3	0.0100	ZN(HL)	0.0010	0.0483
A1	!A2&!A3&B1&!B2&!B3	0.0100	ZN(HL)	0.0010	0.0093
A1	!A2&!A3&B1&!B2&B3	0.0100	ZN(HL)	0.0010	0.0093
A1	!A2&!A3&B1&B2&!B3	0.0100	ZN(HL)	0.0010	0.0094
A1	!A2&!A3&B1&B2&B3	0.0100	ZN(HL)	0.0010	0.0093
B2	!A1&!A2&A3&!B1&!B3	0.0100	ZN(HL)	0.0010	0.1205
B2	!A1&A2&!A3&!B1&!B3	0.0100	ZN(HL)	0.0010	0.0841
B2	!A1&A2&A3&!B1&!B3	0.0100	ZN(HL)	0.0010	0.0843
B2	A1&!A2&!A3&!B1&!B3	0.0100	ZN(HL)	0.0010	0.0460
B2	A1&!A2&A3&!B1&!B3	0.0100	ZN(HL)	0.0010	0.0460
B2	A1&A2&!A3&!B1&!B3	0.0100	ZN(HL)	0.0010	0.0460
B2	A1&A2&A3&!B1&!B3	0.0100	ZN(HL)	0.0010	0.0461
B2(LH)	!A1&!A2&!A3&!B1&!B3	0.0100	n/a	n/a	-0.0599
B2(LH)	!A1&!A2&!A3&!B1&B3	0.0100	n/a	n/a	-0.0581
B2(LH)	!A1&!A2&!A3&B1&!B3	0.0100	n/a	n/a	-0.0580
B2(LH)	!A1&!A2&!A3&B1&B3	0.0100	n/a	n/a	-0.0558
B2(LH)	!A1&!A2&A3&!B1&B3	0.0100	n/a	n/a	-0.0180
B2(LH)	!A1&!A2&A3&B1&!B3	0.0100	n/a	n/a	-0.0495
B2(LH)	!A1&!A2&A3&B1&B3	0.0100	n/a	n/a	-0.0439
B2(LH)	!A1&A2&!A3&!B1&B3	0.0100	n/a	n/a	-0.0180
B2(LH)	!A1&A2&!A3&B1&!B3	0.0100	n/a	n/a	-0.0495
B2(LH)	!A1&A2&!A3&B1&B3	0.0100	n/a	n/a	-0.0439
B2(LH)	!A1&A2&A3&!B1&B3	0.0100	n/a	n/a	-0.0180
B2(LH)	!A1&A2&A3&B1&!B3	0.0100	n/a	n/a	-0.0496
B2(LH)	!A1&A2&A3&B1&B3	0.0100	n/a	n/a	-0.0439
B2(LH)	A1&!A2&!A3&!B1&B3	0.0100	n/a	n/a	-0.0180
B2(LH)	A1&!A2&!A3&B1&!B3	0.0100	n/a	n/a	-0.0495
B2(LH)	A1&!A2&!A3&B1&B3	0.0100	n/a	n/a	-0.0439
B2(LH)	A1&!A2&A3&!B1&B3	0.0100	n/a	n/a	-0.0180
B2(LH)	A1&!A2&A3&B1&!B3	0.0100	n/a	n/a	-0.0496
B2(LH)	A1&!A2&A3&B1&B3	0.0100	n/a	n/a	-0.0439

continues on next page

Table 260 – continued from previous page

B2(LH)	A1&A2&!A3&!B1&B3	0.0100	n/a	n/a	-0.0180
B2(LH)	A1&A2&!A3&B1&!B3	0.0100	n/a	n/a	-0.0496
B2(LH)	A1&A2&!A3&B1&B3	0.0100	n/a	n/a	-0.0439
B2(LH)	A1&A2&A3&!B1&B3	0.0100	n/a	n/a	-0.0180
B2(LH)	A1&A2&A3&B1&!B3	0.0100	n/a	n/a	-0.0496
B2(LH)	A1&A2&A3&B1&B3	0.0100	n/a	n/a	-0.0439
A3(LH)	!A1&!A2&!B1&!B2&!B3	0.0100	n/a	n/a	0.0640
A3(LH)	!A1&A2&!B1&!B2&!B3	0.0100	n/a	n/a	-0.0650
A3(LH)	A1&!A2&!B1&!B2&!B3	0.0100	n/a	n/a	-0.0590
A3(LH)	A1&A2&!B1&!B2&!B3	0.0100	n/a	n/a	-0.0637
A3(LH)	!A1&A2&!B1&!B2&B3	0.0100	n/a	n/a	-0.0518
A3(LH)	!A1&A2&!B1&B2&!B3	0.0100	n/a	n/a	-0.0518
A3(LH)	!A1&A2&!B1&B2&B3	0.0100	n/a	n/a	-0.0518
A3(LH)	!A1&A2&B1&!B2&!B3	0.0100	n/a	n/a	-0.0518
A3(LH)	!A1&A2&B1&!B2&B3	0.0100	n/a	n/a	-0.0518
A3(LH)	!A1&A2&B1&B2&!B3	0.0100	n/a	n/a	-0.0518
A3(LH)	!A1&A2&B1&B2&B3	0.0100	n/a	n/a	-0.0518
A3(LH)	A1&!A2&!B1&!B2&B3	0.0100	n/a	n/a	-0.0494
A3(LH)	A1&!A2&!B1&B2&!B3	0.0100	n/a	n/a	-0.0494
A3(LH)	A1&!A2&!B1&B2&B3	0.0100	n/a	n/a	-0.0494
A3(LH)	A1&!A2&B1&!B2&!B3	0.0100	n/a	n/a	-0.0494
A3(LH)	A1&!A2&B1&!B2&B3	0.0100	n/a	n/a	-0.0494
A3(LH)	A1&!A2&B1&B2&!B3	0.0100	n/a	n/a	-0.0494
A3(LH)	A1&!A2&B1&B2&B3	0.0100	n/a	n/a	-0.0494
A3(LH)	A1&A2&!B1&!B2&B3	0.0100	n/a	n/a	-0.0565
A3(LH)	A1&A2&!B1&B2&!B3	0.0100	n/a	n/a	-0.0565
A3(LH)	A1&A2&!B1&B2&B3	0.0100	n/a	n/a	-0.0565
A3(LH)	A1&A2&B1&!B2&!B3	0.0100	n/a	n/a	-0.0565
A3(LH)	A1&A2&B1&!B2&B3	0.0100	n/a	n/a	-0.0565
A3(LH)	A1&A2&B1&B2&!B3	0.0100	n/a	n/a	-0.0565
A3(LH)	A1&A2&B1&B2&B3	0.0100	n/a	n/a	-0.0564
A3(HL)	!A1&!A2&!B1&!B2&!B3	0.0100	n/a	n/a	0.0670
A3(HL)	!A1&A2&!B1&!B2&!B3	0.0100	n/a	n/a	0.0679
A3(HL)	A1&!A2&!B1&!B2&!B3	0.0100	n/a	n/a	0.0678
A3(HL)	A1&A2&!B1&!B2&!B3	0.0100	n/a	n/a	0.0680
A3(HL)	!A1&A2&!B1&!B2&B3	0.0100	n/a	n/a	0.0597
A3(HL)	!A1&A2&!B1&B2&!B3	0.0100	n/a	n/a	0.0597
A3(HL)	!A1&A2&!B1&B2&B3	0.0100	n/a	n/a	0.0596
A3(HL)	!A1&A2&B1&!B2&!B3	0.0100	n/a	n/a	0.0597
A3(HL)	!A1&A2&B1&!B2&B3	0.0100	n/a	n/a	0.0596
A3(HL)	!A1&A2&B1&B2&!B3	0.0100	n/a	n/a	0.0596
A3(HL)	!A1&A2&B1&B2&B3	0.0100	n/a	n/a	0.0596
A3(HL)	A1&!A2&!B1&!B2&B3	0.0100	n/a	n/a	0.0596
A3(HL)	A1&!A2&!B1&B2&!B3	0.0100	n/a	n/a	0.0596
A3(HL)	A1&!A2&!B1&B2&B3	0.0100	n/a	n/a	0.0598
A3(HL)	A1&!A2&B1&!B2&!B3	0.0100	n/a	n/a	0.0596
A3(HL)	A1&!A2&B1&!B2&B3	0.0100	n/a	n/a	0.0598
A3(HL)	A1&!A2&B1&B2&!B3	0.0100	n/a	n/a	0.0598
A3(HL)	A1&!A2&B1&B2&B3	0.0100	n/a	n/a	0.0597
A3(HL)	A1&A2&!B1&!B2&B3	0.0100	n/a	n/a	0.0597
A3(HL)	A1&A2&!B1&B2&!B3	0.0100	n/a	n/a	0.0597
A3(HL)	A1&A2&!B1&B2&B3	0.0100	n/a	n/a	0.0596

continues on next page

Table 260 – continued from previous page

A3(HL)	A1&A2&B1&!B2&!B3	0.0100	n/a	n/a	0.0597
A3(HL)	A1&A2&B1&!B2&B3	0.0100	n/a	n/a	0.0596
A3(HL)	A1&A2&B1&B2&!B3	0.0100	n/a	n/a	0.0596
A3(HL)	A1&A2&B1&B2&B3	0.0100	n/a	n/a	0.0596
B2(HL)	!A1&!A2&!A3&!B1&!B3	0.0100	n/a	n/a	0.0652
B2(HL)	!A1&!A2&!A3&!B1&B3	0.0100	n/a	n/a	0.0598
B2(HL)	!A1&!A2&!A3&B1&!B3	0.0100	n/a	n/a	0.0597
B2(HL)	!A1&!A2&!A3&B1&B3	0.0100	n/a	n/a	0.0355
B2(HL)	!A1&!A2&A3&!B1&B3	0.0100	n/a	n/a	0.0377
B2(HL)	!A1&!A2&A3&B1&!B3	0.0100	n/a	n/a	0.0597
B2(HL)	!A1&!A2&A3&B1&B3	0.0100	n/a	n/a	0.0355
B2(HL)	!A1&A2&!A3&!B1&B3	0.0100	n/a	n/a	0.0377
B2(HL)	!A1&A2&!A3&B1&!B3	0.0100	n/a	n/a	0.0597
B2(HL)	!A1&A2&!A3&B1&B3	0.0100	n/a	n/a	0.0355
B2(HL)	!A1&A2&A3&!B1&B3	0.0100	n/a	n/a	0.0377
B2(HL)	!A1&A2&A3&B1&!B3	0.0100	n/a	n/a	0.0597
B2(HL)	!A1&A2&A3&B1&B3	0.0100	n/a	n/a	0.0355
B2(HL)	A1&!A2&!A3&!B1&B3	0.0100	n/a	n/a	0.0377
B2(HL)	A1&!A2&!A3&B1&!B3	0.0100	n/a	n/a	0.0597
B2(HL)	A1&!A2&!A3&B1&B3	0.0100	n/a	n/a	0.0355
B2(HL)	A1&!A2&A3&!B1&B3	0.0100	n/a	n/a	0.0377
B2(HL)	A1&!A2&A3&B1&!B3	0.0100	n/a	n/a	0.0597
B2(HL)	A1&!A2&A3&B1&B3	0.0100	n/a	n/a	0.0355
B2(HL)	A1&A2&!A3&!B1&B3	0.0100	n/a	n/a	0.0376
B2(HL)	A1&A2&!A3&B1&!B3	0.0100	n/a	n/a	0.0597
B2(HL)	A1&A2&!A3&B1&B3	0.0100	n/a	n/a	0.0355
B2(HL)	A1&A2&A3&!B1&B3	0.0100	n/a	n/a	0.0376
B2(HL)	A1&A2&A3&B1&!B3	0.0100	n/a	n/a	0.0597
B2(HL)	A1&A2&A3&B1&B3	0.0100	n/a	n/a	0.0355
B3(LH)	!A1&!A2&!A3&!B1&!B2	0.0100	n/a	n/a	-0.0596
B3(LH)	!A1&!A2&!A3&!B1&B2	0.0100	n/a	n/a	-0.0577
B3(LH)	!A1&!A2&!A3&B1&!B2	0.0100	n/a	n/a	-0.0514
B3(LH)	!A1&!A2&!A3&B1&B2	0.0100	n/a	n/a	-0.0564
B3(LH)	!A1&!A2&A3&!B1&B2	0.0100	n/a	n/a	-0.0517
B3(LH)	!A1&!A2&A3&B1&!B2	0.0100	n/a	n/a	-0.0494
B3(LH)	!A1&!A2&A3&B1&B2	0.0100	n/a	n/a	-0.0564
B3(LH)	!A1&A2&!A3&!B1&B2	0.0100	n/a	n/a	-0.0517
B3(LH)	!A1&A2&!A3&B1&!B2	0.0100	n/a	n/a	-0.0494
B3(LH)	!A1&A2&!A3&B1&B2	0.0100	n/a	n/a	-0.0564
B3(LH)	!A1&A2&A3&!B1&B2	0.0100	n/a	n/a	-0.0517
B3(LH)	!A1&A2&A3&B1&!B2	0.0100	n/a	n/a	-0.0494
B3(LH)	!A1&A2&A3&B1&B2	0.0100	n/a	n/a	-0.0564
B3(LH)	A1&!A2&!A3&!B1&B2	0.0100	n/a	n/a	-0.0517
B3(LH)	A1&!A2&!A3&B1&!B2	0.0100	n/a	n/a	-0.0494
B3(LH)	A1&!A2&!A3&B1&B2	0.0100	n/a	n/a	-0.0564
B3(LH)	A1&!A2&A3&!B1&B2	0.0100	n/a	n/a	-0.0517
B3(LH)	A1&!A2&A3&B1&!B2	0.0100	n/a	n/a	-0.0494
B3(LH)	A1&!A2&A3&B1&B2	0.0100	n/a	n/a	-0.0564
B3(LH)	A1&A2&!A3&!B1&B2	0.0100	n/a	n/a	-0.0517
B3(LH)	A1&A2&!A3&B1&!B2	0.0100	n/a	n/a	-0.0494
B3(LH)	A1&A2&!A3&B1&B2	0.0100	n/a	n/a	-0.0564
B3(LH)	A1&A2&A3&!B1&B2	0.0100	n/a	n/a	-0.0517

continues on next page

Table 260 – continued from previous page

B3(LH)	A1&A2&A3&B1&!B2	0.0100	n/a	n/a	-0.0494
B3(LH)	A1&A2&A3&B1&B2	0.0100	n/a	n/a	-0.0564
B3(HL)	!A1&!A2&!A3&!B1&!B2	0.0100	n/a	n/a	0.0649
B3(HL)	!A1&!A2&!A3&!B1&B2	0.0100	n/a	n/a	0.0595
B3(HL)	!A1&!A2&!A3&B1&!B2	0.0100	n/a	n/a	0.0595
B3(HL)	!A1&!A2&!A3&B1&B2	0.0100	n/a	n/a	0.0595
B3(HL)	!A1&!A2&A3&!B1&B2	0.0100	n/a	n/a	0.0595
B3(HL)	!A1&!A2&A3&B1&!B2	0.0100	n/a	n/a	0.0595
B3(HL)	!A1&!A2&A3&B1&B2	0.0100	n/a	n/a	0.0595
B3(HL)	!A1&A2&!A3&!B1&B2	0.0100	n/a	n/a	0.0595
B3(HL)	!A1&A2&!A3&B1&!B2	0.0100	n/a	n/a	0.0595
B3(HL)	!A1&A2&!A3&B1&B2	0.0100	n/a	n/a	0.0595
B3(HL)	!A1&A2&A3&!B1&B2	0.0100	n/a	n/a	0.0595
B3(HL)	!A1&A2&A3&B1&!B2	0.0100	n/a	n/a	0.0595
B3(HL)	!A1&A2&A3&B1&B2	0.0100	n/a	n/a	0.0595
B3(HL)	A1&!A2&!A3&!B1&B2	0.0100	n/a	n/a	0.0595
B3(HL)	A1&!A2&!A3&B1&!B2	0.0100	n/a	n/a	0.0595
B3(HL)	A1&!A2&!A3&B1&B2	0.0100	n/a	n/a	0.0595
B3(HL)	A1&!A2&A3&!B1&B2	0.0100	n/a	n/a	0.0595
B3(HL)	A1&!A2&A3&B1&!B2	0.0100	n/a	n/a	0.0595
B3(HL)	A1&!A2&A3&B1&B2	0.0100	n/a	n/a	0.0595
B3(HL)	A1&A2&!A3&!B1&B2	0.0100	n/a	n/a	0.0595
B3(HL)	A1&A2&!A3&B1&!B2	0.0100	n/a	n/a	0.0595
B3(HL)	A1&A2&!A3&B1&B2	0.0100	n/a	n/a	0.0595
B3(HL)	A1&A2&A3&!B1&B2	0.0100	n/a	n/a	0.0595
B3(HL)	A1&A2&A3&B1&!B2	0.0100	n/a	n/a	0.0595
B3(HL)	A1&A2&A3&B1&B2	0.0100	n/a	n/a	0.0595
A2(LH)	!A1&!A3&!B1&!B2&!B3	0.0100	n/a	n/a	0.0638
A2(LH)	!A1&A3&!B1&!B2&!B3	0.0100	n/a	n/a	-0.0653
A2(LH)	A1&!A3&!B1&!B2&!B3	0.0100	n/a	n/a	-0.0652
A2(LH)	A1&A3&!B1&!B2&!B3	0.0100	n/a	n/a	-0.0632
A2(LH)	!A1&A3&!B1&!B2&B3	0.0100	n/a	n/a	-0.0181
A2(LH)	!A1&A3&!B1&B2&!B3	0.0100	n/a	n/a	-0.0181
A2(LH)	!A1&A3&!B1&B2&B3	0.0100	n/a	n/a	-0.0181
A2(LH)	!A1&A3&B1&!B2&!B3	0.0100	n/a	n/a	-0.0181
A2(LH)	!A1&A3&B1&!B2&B3	0.0100	n/a	n/a	-0.0181
A2(LH)	!A1&A3&B1&B2&!B3	0.0100	n/a	n/a	-0.0181
A2(LH)	!A1&A3&B1&B2&B3	0.0100	n/a	n/a	-0.0181
A2(LH)	A1&!A3&!B1&!B2&B3	0.0100	n/a	n/a	-0.0496
A2(LH)	A1&!A3&!B1&B2&!B3	0.0100	n/a	n/a	-0.0496
A2(LH)	A1&!A3&!B1&B2&B3	0.0100	n/a	n/a	-0.0496
A2(LH)	A1&!A3&B1&!B2&!B3	0.0100	n/a	n/a	-0.0496
A2(LH)	A1&!A3&B1&!B2&B3	0.0100	n/a	n/a	-0.0496
A2(LH)	A1&!A3&B1&B2&!B3	0.0100	n/a	n/a	-0.0496
A2(LH)	A1&!A3&B1&B2&B3	0.0100	n/a	n/a	-0.0496
A2(LH)	A1&A3&!B1&!B2&B3	0.0100	n/a	n/a	-0.0440
A2(LH)	A1&A3&!B1&B2&!B3	0.0100	n/a	n/a	-0.0440
A2(LH)	A1&A3&!B1&B2&B3	0.0100	n/a	n/a	-0.0440
A2(LH)	A1&A3&B1&!B2&!B3	0.0100	n/a	n/a	-0.0440
A2(LH)	A1&A3&B1&!B2&B3	0.0100	n/a	n/a	-0.0440
A2(LH)	A1&A3&B1&B2&!B3	0.0100	n/a	n/a	-0.0440
A2(LH)	A1&A3&B1&B2&B3	0.0100	n/a	n/a	-0.0440

continues on next page

Table 260 – continued from previous page

A1(LH)	!A2&!A3&!B1&!B2&!B3	0.0100	n/a	n/a	0.0635
A1(LH)	!A2&A3&!B1&!B2&!B3	0.0100	n/a	n/a	-0.0596
A1(LH)	A2&!A3&!B1&!B2&!B3	0.0100	n/a	n/a	-0.0656
A1(LH)	A2&A3&!B1&!B2&!B3	0.0100	n/a	n/a	-0.0643
A1(LH)	!A2&A3&!B1&!B2&B3	0.0100	n/a	n/a	-0.0165
A1(LH)	!A2&A3&!B1&B2&!B3	0.0100	n/a	n/a	-0.0165
A1(LH)	!A2&A3&!B1&B2&B3	0.0100	n/a	n/a	-0.0165
A1(LH)	!A2&A3&B1&!B2&!B3	0.0100	n/a	n/a	-0.0165
A1(LH)	!A2&A3&B1&!B2&B3	0.0100	n/a	n/a	-0.0165
A1(LH)	!A2&A3&B1&B2&!B3	0.0100	n/a	n/a	-0.0165
A1(LH)	!A2&A3&B1&B2&B3	0.0100	n/a	n/a	-0.0165
A1(LH)	A2&!A3&!B1&!B2&B3	0.0100	n/a	n/a	-0.0170
A1(LH)	A2&!A3&!B1&B2&!B3	0.0100	n/a	n/a	-0.0170
A1(LH)	A2&!A3&!B1&B2&B3	0.0100	n/a	n/a	-0.0170
A1(LH)	A2&!A3&B1&!B2&!B3	0.0100	n/a	n/a	-0.0170
A1(LH)	A2&!A3&B1&!B2&B3	0.0100	n/a	n/a	-0.0170
A1(LH)	A2&!A3&B1&B2&!B3	0.0100	n/a	n/a	-0.0170
A1(LH)	A2&!A3&B1&B2&B3	0.0100	n/a	n/a	-0.0170
A1(LH)	A2&A3&!B1&!B2&B3	0.0100	n/a	n/a	-0.0170
A1(LH)	A2&A3&!B1&B2&!B3	0.0100	n/a	n/a	-0.0170
A1(LH)	A2&A3&!B1&B2&B3	0.0100	n/a	n/a	-0.0170
A1(LH)	A2&A3&B1&!B2&!B3	0.0100	n/a	n/a	-0.0170
A1(LH)	A2&A3&B1&!B2&B3	0.0100	n/a	n/a	-0.0170
A1(LH)	A2&A3&B1&B2&!B3	0.0100	n/a	n/a	-0.0170
A1(LH)	A2&A3&B1&B2&B3	0.0100	n/a	n/a	-0.0170
A2(HL)	!A1&!A3&!B1&!B2&!B3	0.0100	n/a	n/a	0.0671
A2(HL)	!A1&A3&!B1&!B2&!B3	0.0100	n/a	n/a	0.0678
A2(HL)	A1&!A3&!B1&!B2&!B3	0.0100	n/a	n/a	0.0680
A2(HL)	A1&A3&!B1&!B2&!B3	0.0100	n/a	n/a	0.0441
A2(HL)	!A1&A3&!B1&!B2&B3	0.0100	n/a	n/a	0.0376
A2(HL)	!A1&A3&!B1&B2&!B3	0.0100	n/a	n/a	0.0376
A2(HL)	!A1&A3&!B1&B2&B3	0.0100	n/a	n/a	0.0376
A2(HL)	!A1&A3&B1&!B2&!B3	0.0100	n/a	n/a	0.0376
A2(HL)	!A1&A3&B1&!B2&B3	0.0100	n/a	n/a	0.0376
A2(HL)	!A1&A3&B1&B2&!B3	0.0100	n/a	n/a	0.0376
A2(HL)	!A1&A3&B1&B2&B3	0.0100	n/a	n/a	0.0376
A2(HL)	A1&!A3&!B1&!B2&B3	0.0100	n/a	n/a	0.0597
A2(HL)	A1&!A3&!B1&B2&!B3	0.0100	n/a	n/a	0.0597
A2(HL)	A1&!A3&!B1&B2&B3	0.0100	n/a	n/a	0.0597
A2(HL)	A1&!A3&B1&!B2&!B3	0.0100	n/a	n/a	0.0597
A2(HL)	A1&!A3&B1&!B2&B3	0.0100	n/a	n/a	0.0597
A2(HL)	A1&!A3&B1&B2&!B3	0.0100	n/a	n/a	0.0597
A2(HL)	A1&!A3&B1&B2&B3	0.0100	n/a	n/a	0.0597
A2(HL)	A1&A3&!B1&!B2&B3	0.0100	n/a	n/a	0.0356
A2(HL)	A1&A3&!B1&B2&!B3	0.0100	n/a	n/a	0.0356
A2(HL)	A1&A3&!B1&B2&B3	0.0100	n/a	n/a	0.0356
A2(HL)	A1&A3&B1&!B2&!B3	0.0100	n/a	n/a	0.0356
A2(HL)	A1&A3&B1&!B2&B3	0.0100	n/a	n/a	0.0356
A2(HL)	A1&A3&B1&B2&!B3	0.0100	n/a	n/a	0.0356
A2(HL)	A1&A3&B1&B2&B3	0.0100	n/a	n/a	0.0356
B1(HL)	!A1&!A2&!A3&!B2&!B3	0.0100	n/a	n/a	0.0652
B1(HL)	!A1&!A2&!A3&!B2&B3	0.0100	n/a	n/a	0.0600

continues on next page

Table 260 – continued from previous page

B1(HL)	!A1&!A2&!A3&B2&!B3	0.0100	n/a	n/a	0.0600
B1(HL)	!A1&!A2&!A3&B2&B3	0.0100	n/a	n/a	0.0600
B1(HL)	!A1&!A2&A3&!B2&B3	0.0100	n/a	n/a	0.0776
B1(HL)	!A1&!A2&A3&B2&!B3	0.0100	n/a	n/a	0.0410
B1(HL)	!A1&!A2&A3&B2&B3	0.0100	n/a	n/a	0.0410
B1(HL)	!A1&A2&!A3&!B2&B3	0.0100	n/a	n/a	0.0776
B1(HL)	!A1&A2&!A3&B2&!B3	0.0100	n/a	n/a	0.0410
B1(HL)	!A1&A2&!A3&B2&B3	0.0100	n/a	n/a	0.0410
B1(HL)	!A1&A2&A3&!B2&B3	0.0100	n/a	n/a	0.0776
B1(HL)	!A1&A2&A3&B2&!B3	0.0100	n/a	n/a	0.0410
B1(HL)	!A1&A2&A3&B2&B3	0.0100	n/a	n/a	0.0410
B1(HL)	A1&!A2&!A3&!B2&B3	0.0100	n/a	n/a	0.0776
B1(HL)	A1&!A2&!A3&B2&!B3	0.0100	n/a	n/a	0.0410
B1(HL)	A1&!A2&!A3&B2&B3	0.0100	n/a	n/a	0.0409
B1(HL)	A1&!A2&A3&!B2&B3	0.0100	n/a	n/a	0.0776
B1(HL)	A1&!A2&A3&B2&!B3	0.0100	n/a	n/a	0.0410
B1(HL)	A1&!A2&A3&B2&B3	0.0100	n/a	n/a	0.0410
B1(HL)	A1&A2&!A3&!B2&B3	0.0100	n/a	n/a	0.0776
B1(HL)	A1&A2&!A3&B2&!B3	0.0100	n/a	n/a	0.0410
B1(HL)	A1&A2&!A3&B2&B3	0.0100	n/a	n/a	0.0410
B1(HL)	A1&A2&A3&!B2&B3	0.0100	n/a	n/a	0.0776
B1(HL)	A1&A2&A3&B2&!B3	0.0100	n/a	n/a	0.0410
B1(HL)	A1&A2&A3&B2&B3	0.0100	n/a	n/a	0.0410
A1(HL)	!A2&!A3&!B1&!B2&!B3	0.0100	n/a	n/a	0.0673
A1(HL)	!A2&A3&!B1&!B2&!B3	0.0100	n/a	n/a	0.0681
A1(HL)	A2&!A3&!B1&!B2&!B3	0.0100	n/a	n/a	0.0681
A1(HL)	A2&A3&!B1&!B2&!B3	0.0100	n/a	n/a	0.0682
A1(HL)	!A2&A3&!B1&!B2&B3	0.0100	n/a	n/a	0.0776
A1(HL)	!A2&A3&!B1&B2&!B3	0.0100	n/a	n/a	0.0776
A1(HL)	!A2&A3&!B1&B2&B3	0.0100	n/a	n/a	0.0776
A1(HL)	!A2&A3&B1&!B2&!B3	0.0100	n/a	n/a	0.0776
A1(HL)	!A2&A3&B1&!B2&B3	0.0100	n/a	n/a	0.0776
A1(HL)	!A2&A3&B1&B2&!B3	0.0100	n/a	n/a	0.0776
A1(HL)	!A2&A3&B1&B2&B3	0.0100	n/a	n/a	0.0776
A1(HL)	A2&!A3&!B1&!B2&B3	0.0100	n/a	n/a	0.0409
A1(HL)	A2&!A3&!B1&B2&!B3	0.0100	n/a	n/a	0.0409
A1(HL)	A2&!A3&!B1&B2&B3	0.0100	n/a	n/a	0.0409
A1(HL)	A2&!A3&B1&!B2&!B3	0.0100	n/a	n/a	0.0409
A1(HL)	A2&!A3&B1&!B2&B3	0.0100	n/a	n/a	0.0409
A1(HL)	A2&!A3&B1&B2&!B3	0.0100	n/a	n/a	0.0409
A1(HL)	A2&!A3&B1&B2&B3	0.0100	n/a	n/a	0.0409
A1(HL)	A2&A3&!B1&!B2&B3	0.0100	n/a	n/a	0.0409
A1(HL)	A2&A3&!B1&B2&!B3	0.0100	n/a	n/a	0.0409
A1(HL)	A2&A3&!B1&B2&B3	0.0100	n/a	n/a	0.0410
A1(HL)	A2&A3&B1&!B2&!B3	0.0100	n/a	n/a	0.0409
A1(HL)	A2&A3&B1&!B2&B3	0.0100	n/a	n/a	0.0409
A1(HL)	A2&A3&B1&B2&!B3	0.0100	n/a	n/a	0.0409
A1(HL)	A2&A3&B1&B2&B3	0.0100	n/a	n/a	0.0410
B1(LH)	!A1&!A2&!A3&!B2&!B3	0.0100	n/a	n/a	-0.0601
B1(LH)	!A1&!A2&!A3&!B2&B3	0.0100	n/a	n/a	-0.0523
B1(LH)	!A1&!A2&!A3&B2&!B3	0.0100	n/a	n/a	-0.0583
B1(LH)	!A1&!A2&!A3&B2&B3	0.0100	n/a	n/a	-0.0570

continues on next page

Table 260 – continued from previous page

B1(LH)	!A1&!A2&A3&!B2&B3	0.0100	n/a	n/a	-0.0165
B1(LH)	!A1&!A2&A3&B2&!B3	0.0100	n/a	n/a	-0.0170
B1(LH)	!A1&!A2&A3&B2&B3	0.0100	n/a	n/a	-0.0170
B1(LH)	!A1&A2&!A3&!B2&B3	0.0100	n/a	n/a	-0.0165
B1(LH)	!A1&A2&!A3&B2&!B3	0.0100	n/a	n/a	-0.0170
B1(LH)	!A1&A2&!A3&B2&B3	0.0100	n/a	n/a	-0.0170
B1(LH)	!A1&A2&A3&!B2&B3	0.0100	n/a	n/a	-0.0165
B1(LH)	!A1&A2&A3&B2&!B3	0.0100	n/a	n/a	-0.0170
B1(LH)	!A1&A2&A3&B2&B3	0.0100	n/a	n/a	-0.0170
B1(LH)	A1&!A2&!A3&!B2&B3	0.0100	n/a	n/a	-0.0165
B1(LH)	A1&!A2&!A3&B2&!B3	0.0100	n/a	n/a	-0.0170
B1(LH)	A1&!A2&!A3&B2&B3	0.0100	n/a	n/a	-0.0170
B1(LH)	A1&!A2&A3&!B2&B3	0.0100	n/a	n/a	-0.0165
B1(LH)	A1&!A2&A3&B2&!B3	0.0100	n/a	n/a	-0.0170
B1(LH)	A1&!A2&A3&B2&B3	0.0100	n/a	n/a	-0.0170
B1(LH)	A1&A2&!A3&!B2&B3	0.0100	n/a	n/a	-0.0165
B1(LH)	A1&A2&!A3&B2&!B3	0.0100	n/a	n/a	-0.0170
B1(LH)	A1&A2&!A3&B2&B3	0.0100	n/a	n/a	-0.0170
B1(LH)	A1&A2&A3&!B2&B3	0.0100	n/a	n/a	-0.0165
B1(LH)	A1&A2&A3&B2&!B3	0.0100	n/a	n/a	-0.0170
B1(LH)	A1&A2&A3&B2&B3	0.0100	n/a	n/a	-0.0170

LEAKAGE POWER

When Condition	Power (nW)
!A1&!A2&!A3&!B1&!B2&!B3	0.1258
!A1&!A2&!A3&!B1&!B2&B3	0.1267
!A1&!A2&!A3&!B1&B2&!B3	0.1267
!A1&!A2&!A3&!B1&B2&B3	0.1267
!A1&!A2&!A3&B1&!B2&!B3	0.1267
!A1&!A2&!A3&B1&!B2&B3	0.1267
!A1&!A2&!A3&B1&B2&!B3	0.1267
!A1&!A2&!A3&B1&B2&B3	0.1267
!A1&!A2&A3&!B1&!B2&!B3	0.2452
!A1&A2&!A3&!B1&!B2&!B3	0.2452
!A1&A2&A3&!B1&!B2&!B3	0.2457
A1&!A2&!A3&!B1&!B2&!B3	0.2452
A1&!A2&A3&!B1&!B2&!B3	0.2457
A1&A2&!A3&!B1&!B2&!B3	0.2457
A1&A2&A3&!B1&!B2&!B3	0.2461
!A1&!A2&A3&!B1&!B2&B3	0.2452
!A1&!A2&A3&!B1&B2&!B3	0.2099
!A1&!A2&A3&!B1&B2&B3	0.2099
!A1&!A2&A3&B1&!B2&!B3	0.1744
!A1&!A2&A3&B1&!B2&B3	0.1744
!A1&!A2&A3&B1&B2&!B3	0.1744
!A1&!A2&A3&B1&B2&B3	0.1744

continues on next page

Table 261 – continued from previous page

!A1&A2&!A3&!B1&!B2&B3	0.2099
!A1&A2&!A3&!B1&B2&!B3	0.1746
!A1&A2&!A3&!B1&B2&B3	0.1746
!A1&A2&!A3&B1&!B2&!B3	0.1392
!A1&A2&!A3&B1&!B2&B3	0.1392
!A1&A2&!A3&B1&B2&!B3	0.1392
!A1&A2&!A3&B1&B2&B3	0.1392
!A1&A2&A3&!B1&!B2&B3	0.2099
!A1&A2&A3&!B1&B2&!B3	0.1746
!A1&A2&A3&!B1&B2&B3	0.1746
!A1&A2&A3&B1&!B2&!B3	0.1392
!A1&A2&A3&B1&!B2&B3	0.1392
!A1&A2&A3&B1&B2&!B3	0.1392
!A1&A2&A3&B1&B2&B3	0.1392
A1&!A2&!A3&!B1&!B2&B3	0.1744
A1&!A2&!A3&!B1&B2&!B3	0.1392
A1&!A2&!A3&!B1&B2&B3	0.1392
A1&!A2&!A3&B1&!B2&!B3	0.1037
A1&!A2&!A3&B1&!B2&B3	0.1037
A1&!A2&!A3&B1&B2&!B3	0.1037
A1&!A2&!A3&B1&B2&B3	0.1037
A1&!A2&A3&!B1&!B2&B3	0.1744
A1&!A2&A3&!B1&B2&!B3	0.1392
A1&!A2&A3&!B1&B2&B3	0.1392
A1&!A2&A3&B1&!B2&!B3	0.1037
A1&!A2&A3&B1&!B2&B3	0.1037
A1&!A2&A3&B1&B2&!B3	0.1037
A1&!A2&A3&B1&B2&B3	0.1037
A1&A2&!A3&!B1&!B2&B3	0.1744
A1&A2&!A3&!B1&B2&!B3	0.1392
A1&A2&!A3&!B1&B2&B3	0.1392
A1&A2&!A3&B1&!B2&!B3	0.1037
A1&A2&!A3&B1&!B2&B3	0.1037
A1&A2&!A3&B1&B2&!B3	0.1037
A1&A2&!A3&B1&B2&B3	0.1037
A1&A2&A3&!B1&!B2&B3	0.1744
A1&A2&A3&!B1&B2&!B3	0.1392
A1&A2&A3&!B1&B2&B3	0.1392
A1&A2&A3&B1&!B2&!B3	0.1037
A1&A2&A3&B1&!B2&B3	0.1037
A1&A2&A3&B1&B2&!B3	0.1037
A1&A2&A3&B1&B2&B3	0.1037

gf180mcu_fd_sc_mcu9t5v0__oai33_2

gf180mcu_fd_sc_mcu9t5v0__oai33_2 symbol

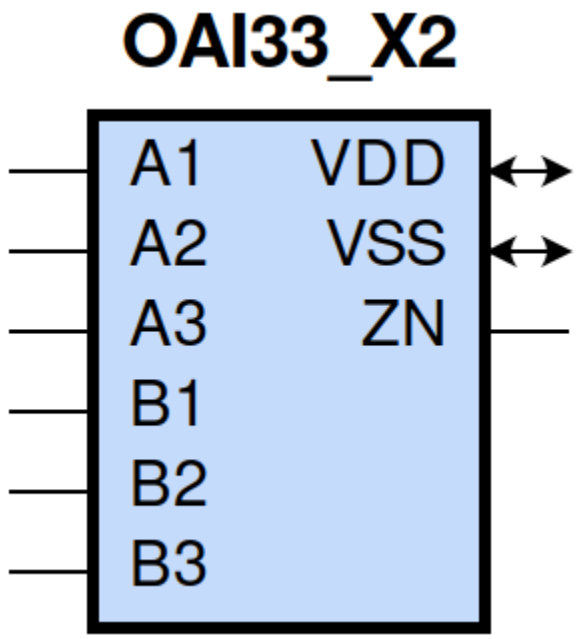

gf180mcu_fd_sc_mcu9t5v0__oai33_2 schematic

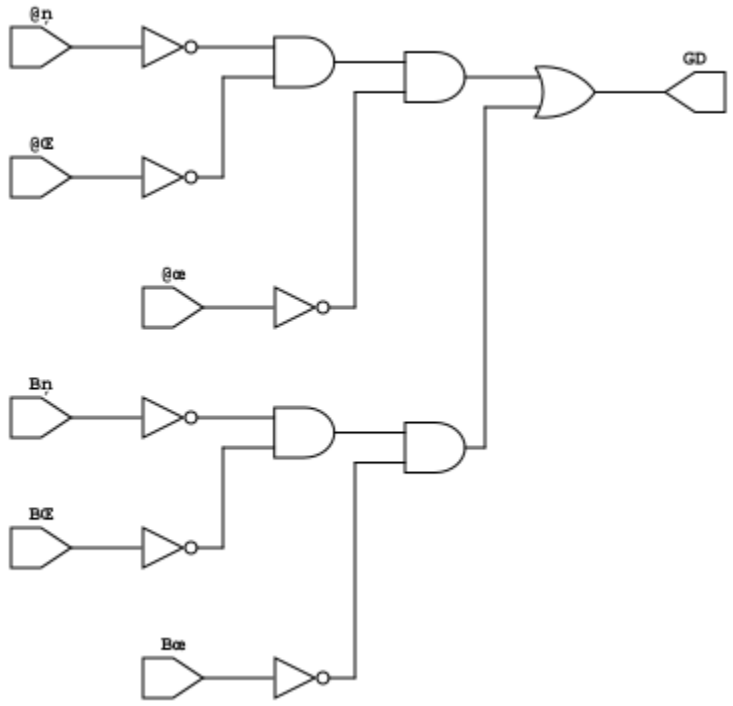

gf180mcu_fd_sc_mcu9t5v0__oai33_2 layout

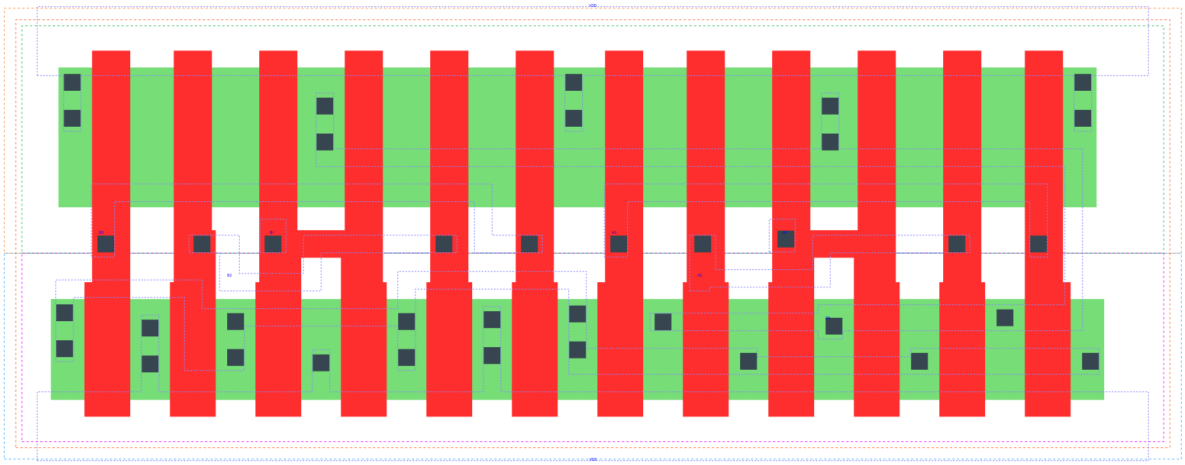

OAI33_X2 is a three 2-input OR into 2-input NAND with 2X drive strength

Attributes

Attribute	Value
area	73.382400 μm^2

OUTPUT FUNCTIONS

Output Pin	Function
ZN	(((!A1)&(!A2)&(!A3))|((!B1)&(!B2)&(!B3)))

TRUTH TABLE FOR ZN

A1	A2	A3	B1	B2	B3	ZN
0	0	0	?	?	?	1
?	?	?	0	0	0	1
1	?	?	1	?	?	0
1	?	?	?	1	?	0
1	?	?	?	?	1	0
?	1	?	1	?	?	0
?	1	?	?	1	?	0
?	1	?	?	?	1	0
?	?	1	1	?	?	0
?	?	1	?	1	?	0
?	?	1	?	?	1	0

FUNCTIONAL SCHEMATIC

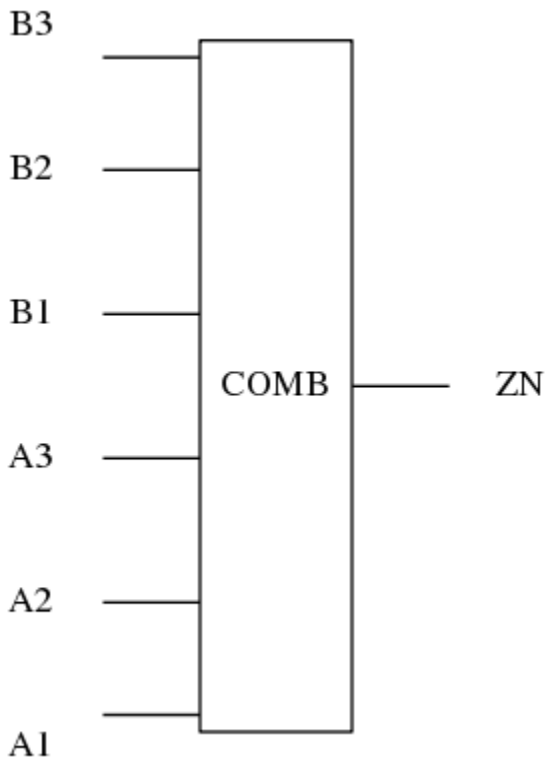

PIN CAPACITANCE (pf)

Pin	Type	Capacitance (pf)
B3	input	0.0141
B2	input	0.0138
B1	input	0.0134
A3	input	0.0144
A2	input	0.0138
A1	input	0.0137

DELAY AND OUTPUT TRANSITION TIME corresponding to min slew and load

Input Pin	Output	When Condition	Tin (ns)	Out Load (pf)	Delay (ns)	Tout (ns)
B3(HL)	ZN(LH)	!A1&!A2&A3&!B1&!B2	0.0100	0.0010	0.4051	0.3740
B3(HL)	ZN(LH)	!A1&A2&!A3&!B1&!B2	0.0100	0.0010	0.4040	0.3205
B3(HL)	ZN(LH)	!A1&A2&A3&!B1&!B2	0.0100	0.0010	0.4399	0.3474
B3(HL)	ZN(LH)	A1&!A2&!A3&!B1&!B2	0.0100	0.0010	0.3828	0.2543
B3(HL)	ZN(LH)	A1&!A2&A3&!B1&!B2	0.0100	0.0010	0.4194	0.2821
B3(HL)	ZN(LH)	A1&A2&!A3&!B1&!B2	0.0100	0.0010	0.4194	0.2821
B3(HL)	ZN(LH)	A1&A2&A3&!B1&!B2	0.0100	0.0010	0.4524	0.3089
B3(LH)	ZN(HL)	!A1&!A2&A3&!B1&!B2	0.0100	0.0010	0.1702	0.0952
B3(LH)	ZN(HL)	!A1&A2&!A3&!B1&!B2	0.0100	0.0010	0.1556	0.0824
B3(LH)	ZN(HL)	!A1&A2&A3&!B1&!B2	0.0100	0.0010	0.1249	0.0724
B3(LH)	ZN(HL)	A1&!A2&!A3&!B1&!B2	0.0100	0.0010	0.1281	0.0664
B3(LH)	ZN(HL)	A1&!A2&A3&!B1&!B2	0.0100	0.0010	0.1046	0.0605
B3(LH)	ZN(HL)	A1&A2&!A3&!B1&!B2	0.0100	0.0010	0.1046	0.0605
B3(LH)	ZN(HL)	A1&A2&A3&!B1&!B2	0.0100	0.0010	0.1010	0.0676
B2(HL)	ZN(LH)	!A1&!A2&A3&!B1&!B3	0.0100	0.0010	0.3817	0.3739
B2(HL)	ZN(LH)	!A1&A2&!A3&!B1&!B3	0.0100	0.0010	0.3807	0.3203
B2(HL)	ZN(LH)	!A1&A2&A3&!B1&!B3	0.0100	0.0010	0.4166	0.3473
B2(HL)	ZN(LH)	A1&!A2&!A3&!B1&!B3	0.0100	0.0010	0.3594	0.2547
B2(HL)	ZN(LH)	A1&!A2&A3&!B1&!B3	0.0100	0.0010	0.3963	0.2822
B2(HL)	ZN(LH)	A1&A2&!A3&!B1&!B3	0.0100	0.0010	0.3963	0.2822
B2(HL)	ZN(LH)	A1&A2&A3&!B1&!B3	0.0100	0.0010	0.4291	0.3090
B2(LH)	ZN(HL)	!A1&!A2&A3&!B1&!B3	0.0100	0.0010	0.1575	0.0819
B2(LH)	ZN(HL)	!A1&A2&!A3&!B1&!B3	0.0100	0.0010	0.1457	0.0697
B2(LH)	ZN(HL)	!A1&A2&A3&!B1&!B3	0.0100	0.0010	0.1193	0.0625
B2(LH)	ZN(HL)	A1&!A2&!A3&!B1&!B3	0.0100	0.0010	0.1214	0.0549
B2(LH)	ZN(HL)	A1&!A2&A3&!B1&!B3	0.0100	0.0010	0.1014	0.0511
B2(LH)	ZN(HL)	A1&A2&!A3&!B1&!B3	0.0100	0.0010	0.1014	0.0511
B2(LH)	ZN(HL)	A1&A2&A3&!B1&!B3	0.0100	0.0010	0.0979	0.0582
B1(LH)	ZN(HL)	!A1&!A2&A3&!B2&!B3	0.0100	0.0010	0.1310	0.0659
B1(LH)	ZN(HL)	!A1&A2&!A3&!B2&!B3	0.0100	0.0010	0.1225	0.0548
B1(LH)	ZN(HL)	!A1&A2&A3&!B2&!B3	0.0100	0.0010	0.1023	0.0512
B1(LH)	ZN(HL)	A1&!A2&!A3&!B2&!B3	0.0100	0.0010	0.1001	0.0402
B1(LH)	ZN(HL)	A1&!A2&A3&!B2&!B3	0.0100	0.0010	0.0858	0.0397
B1(LH)	ZN(HL)	A1&A2&!A3&!B2&!B3	0.0100	0.0010	0.0858	0.0397
B1(LH)	ZN(HL)	A1&A2&A3&!B2&!B3	0.0100	0.0010	0.0829	0.0466
B1(HL)	ZN(LH)	!A1&!A2&A3&!B2&!B3	0.0100	0.0010	0.3251	0.3739

continues on next page

Table 262 – continued from previous page

B1(HL)	ZN(LH)	!A1&A2&!A3&!B2&!B3	0.0100	0.0010	0.3241	0.3204
B1(HL)	ZN(LH)	!A1&A2&A3&!B2&!B3	0.0100	0.0010	0.3599	0.3471
B1(HL)	ZN(LH)	A1&!A2&!A3&!B2&!B3	0.0100	0.0010	0.3029	0.2540
B1(HL)	ZN(LH)	A1&!A2&A3&!B2&!B3	0.0100	0.0010	0.3396	0.2820
B1(HL)	ZN(LH)	A1&A2&!A3&!B2&!B3	0.0100	0.0010	0.3396	0.2820
B1(HL)	ZN(LH)	A1&A2&A3&!B2&!B3	0.0100	0.0010	0.3723	0.3087
A3(HL)	ZN(LH)	!A1&!A2&!B1&!B2&B3	0.0100	0.0010	0.2427	0.2388
A3(HL)	ZN(LH)	!A1&!A2&!B1&B2&!B3	0.0100	0.0010	0.2427	0.1954
A3(HL)	ZN(LH)	!A1&!A2&!B1&B2&B3	0.0100	0.0010	0.2416	0.1954
A3(HL)	ZN(LH)	!A1&!A2&B1&!B2&!B3	0.0100	0.0010	0.2280	0.1334
A3(HL)	ZN(LH)	!A1&!A2&B1&!B2&B3	0.0100	0.0010	0.2269	0.1334
A3(HL)	ZN(LH)	!A1&!A2&B1&B2&!B3	0.0100	0.0010	0.2269	0.1334
A3(HL)	ZN(LH)	!A1&!A2&B1&B2&B3	0.0100	0.0010	0.2262	0.1333
A3(LH)	ZN(HL)	!A1&!A2&!B1&!B2&B3	0.0100	0.0010	0.1288	0.0968
A3(LH)	ZN(HL)	!A1&!A2&!B1&B2&!B3	0.0100	0.0010	0.1137	0.0837
A3(LH)	ZN(HL)	!A1&!A2&!B1&B2&B3	0.0100	0.0010	0.0932	0.0637
A3(LH)	ZN(HL)	!A1&!A2&B1&!B2&!B3	0.0100	0.0010	0.0856	0.0678
A3(LH)	ZN(HL)	!A1&!A2&B1&!B2&B3	0.0100	0.0010	0.0708	0.0506
A3(LH)	ZN(HL)	!A1&!A2&B1&B2&!B3	0.0100	0.0010	0.0709	0.0506
A3(LH)	ZN(HL)	!A1&!A2&B1&B2&B3	0.0100	0.0010	0.0664	0.0464
A2(HL)	ZN(LH)	!A1&!A3&!B1&!B2&B3	0.0100	0.0010	0.2200	0.2386
A2(HL)	ZN(LH)	!A1&!A3&!B1&B2&!B3	0.0100	0.0010	0.2200	0.1952
A2(HL)	ZN(LH)	!A1&!A3&!B1&B2&B3	0.0100	0.0010	0.2187	0.1954
A2(HL)	ZN(LH)	!A1&!A3&B1&!B2&!B3	0.0100	0.0010	0.2052	0.1333
A2(HL)	ZN(LH)	!A1&!A3&B1&!B2&B3	0.0100	0.0010	0.2041	0.1333
A2(HL)	ZN(LH)	!A1&!A3&B1&B2&!B3	0.0100	0.0010	0.2041	0.1333
A2(HL)	ZN(LH)	!A1&!A3&B1&B2&B3	0.0100	0.0010	0.2034	0.1333
A2(LH)	ZN(HL)	!A1&!A3&!B1&!B2&B3	0.0100	0.0010	0.1164	0.0818
A2(LH)	ZN(HL)	!A1&!A3&!B1&B2&!B3	0.0100	0.0010	0.1046	0.0698
A2(LH)	ZN(HL)	!A1&!A3&!B1&B2&B3	0.0100	0.0010	0.0879	0.0540
A2(LH)	ZN(HL)	!A1&!A3&B1&!B2&!B3	0.0100	0.0010	0.0803	0.0544
A2(LH)	ZN(HL)	!A1&!A3&B1&!B2&B3	0.0100	0.0010	0.0686	0.0423
A2(LH)	ZN(HL)	!A1&!A3&B1&B2&!B3	0.0100	0.0010	0.0687	0.0423
A2(LH)	ZN(HL)	!A1&!A3&B1&B2&B3	0.0100	0.0010	0.0649	0.0391
A1(HL)	ZN(LH)	!A2&!A3&!B1&!B2&B3	0.0100	0.0010	0.1628	0.2367
A1(HL)	ZN(LH)	!A2&!A3&!B1&B2&!B3	0.0100	0.0010	0.1629	0.1932
A1(HL)	ZN(LH)	!A2&!A3&!B1&B2&B3	0.0100	0.0010	0.1616	0.1932
A1(HL)	ZN(LH)	!A2&!A3&B1&!B2&!B3	0.0100	0.0010	0.1482	0.1312
A1(HL)	ZN(LH)	!A2&!A3&B1&!B2&B3	0.0100	0.0010	0.1469	0.1311
A1(HL)	ZN(LH)	!A2&!A3&B1&B2&!B3	0.0100	0.0010	0.1469	0.1311
A1(HL)	ZN(LH)	!A2&!A3&B1&B2&B3	0.0100	0.0010	0.1462	0.1311
A1(LH)	ZN(HL)	!A2&!A3&!B1&!B2&B3	0.0100	0.0010	0.0893	0.0654
A1(LH)	ZN(HL)	!A2&!A3&!B1&B2&!B3	0.0100	0.0010	0.0812	0.0539
A1(LH)	ZN(HL)	!A2&!A3&!B1&B2&B3	0.0100	0.0010	0.0695	0.0416
A1(LH)	ZN(HL)	!A2&!A3&B1&!B2&!B3	0.0100	0.0010	0.0596	0.0379
A1(LH)	ZN(HL)	!A2&!A3&B1&!B2&B3	0.0100	0.0010	0.0528	0.0299
A1(LH)	ZN(HL)	!A2&!A3&B1&B2&!B3	0.0100	0.0010	0.0528	0.0299
A1(LH)	ZN(HL)	!A2&!A3&B1&B2&B3	0.0100	0.0010	0.0504	0.0277

DYNAMIC ENERGY

Input Pin	When Condition	Tin (ns)	Output	Out Load (pf)	Energy (uW/MHz)
A1	!A2&!A3&!B1&!B2&B3	0.0100	ZN(LH)	0.0010	0.6109
A1	!A2&!A3&!B1&B2&!B3	0.0100	ZN(LH)	0.0010	0.5237
A1	!A2&!A3&!B1&B2&B3	0.0100	ZN(LH)	0.0010	0.5217
A1	!A2&!A3&B1&!B2&!B3	0.0100	ZN(LH)	0.0010	0.4349
A1	!A2&!A3&B1&!B2&B3	0.0100	ZN(LH)	0.0010	0.4327
A1	!A2&!A3&B1&B2&!B3	0.0100	ZN(LH)	0.0010	0.4327
A1	!A2&!A3&B1&B2&B3	0.0100	ZN(LH)	0.0010	0.4315
B2	!A1&!A2&A3&!B1&!B3	0.0100	ZN(LH)	0.0010	1.0738
B2	!A1&A2&!A3&!B1&!B3	0.0100	ZN(LH)	0.0010	0.9873
B2	!A1&A2&A3&!B1&!B3	0.0100	ZN(LH)	0.0010	1.0593
B2	A1&!A2&!A3&!B1&!B3	0.0100	ZN(LH)	0.0010	0.8979
B2	A1&!A2&A3&!B1&!B3	0.0100	ZN(LH)	0.0010	0.9703
B2	A1&A2&!A3&!B1&!B3	0.0100	ZN(LH)	0.0010	0.9702
B2	A1&A2&A3&!B1&!B3	0.0100	ZN(LH)	0.0010	1.0412
B1	!A1&!A2&A3&!B2&!B3	0.0100	ZN(HL)	0.0010	0.1688
B1	!A1&A2&!A3&!B2&!B3	0.0100	ZN(HL)	0.0010	0.0955
B1	!A1&A2&A3&!B2&!B3	0.0100	ZN(HL)	0.0010	0.0957
B1	A1&!A2&!A3&!B2&!B3	0.0100	ZN(HL)	0.0010	0.0173
B1	A1&!A2&A3&!B2&!B3	0.0100	ZN(HL)	0.0010	0.0176
B1	A1&A2&!A3&!B2&!B3	0.0100	ZN(HL)	0.0010	0.0176
B1	A1&A2&A3&!B2&!B3	0.0100	ZN(HL)	0.0010	0.0178
A2	!A1&!A3&!B1&!B2&B3	0.0100	ZN(LH)	0.0010	0.7009
A2	!A1&!A3&!B1&B2&!B3	0.0100	ZN(LH)	0.0010	0.6138
A2	!A1&!A3&!B1&B2&B3	0.0100	ZN(LH)	0.0010	0.6118
A2	!A1&!A3&B1&!B2&!B3	0.0100	ZN(LH)	0.0010	0.5249
A2	!A1&!A3&B1&!B2&B3	0.0100	ZN(LH)	0.0010	0.5230
A2	!A1&!A3&B1&B2&!B3	0.0100	ZN(LH)	0.0010	0.5230
A2	!A1&!A3&B1&B2&B3	0.0100	ZN(LH)	0.0010	0.5218
B1	!A1&!A2&A3&!B2&!B3	0.0100	ZN(LH)	0.0010	0.9847
B1	!A1&A2&!A3&!B2&!B3	0.0100	ZN(LH)	0.0010	0.8982
B1	!A1&A2&A3&!B2&!B3	0.0100	ZN(LH)	0.0010	0.9701
B1	A1&!A2&!A3&!B2&!B3	0.0100	ZN(LH)	0.0010	0.8089
B1	A1&!A2&A3&!B2&!B3	0.0100	ZN(LH)	0.0010	0.8813
B1	A1&A2&!A3&!B2&!B3	0.0100	ZN(LH)	0.0010	0.8812
B1	A1&A2&A3&!B2&!B3	0.0100	ZN(LH)	0.0010	0.9518
B3	!A1&!A2&A3&!B1&!B2	0.0100	ZN(LH)	0.0010	1.1611
B3	!A1&A2&!A3&!B1&!B2	0.0100	ZN(LH)	0.0010	1.0748
B3	!A1&A2&A3&!B1&!B2	0.0100	ZN(LH)	0.0010	1.1468
B3	A1&!A2&!A3&!B1&!B2	0.0100	ZN(LH)	0.0010	0.9851
B3	A1&!A2&A3&!B1&!B2	0.0100	ZN(LH)	0.0010	1.0575
B3	A1&A2&!A3&!B1&!B2	0.0100	ZN(LH)	0.0010	1.0575
B3	A1&A2&A3&!B1&!B2	0.0100	ZN(LH)	0.0010	1.1283
A2	!A1&!A3&!B1&!B2&B3	0.0100	ZN(HL)	0.0010	0.2434
A2	!A1&!A3&!B1&B2&!B3	0.0100	ZN(HL)	0.0010	0.1692
A2	!A1&!A3&!B1&B2&B3	0.0100	ZN(HL)	0.0010	0.1696
A2	!A1&!A3&B1&!B2&!B3	0.0100	ZN(HL)	0.0010	0.0928
A2	!A1&!A3&B1&!B2&B3	0.0100	ZN(HL)	0.0010	0.0927
A2	!A1&!A3&B1&B2&!B3	0.0100	ZN(HL)	0.0010	0.0927
A2	!A1&!A3&B1&B2&B3	0.0100	ZN(HL)	0.0010	0.0928
B3	!A1&!A2&A3&!B1&!B2	0.0100	ZN(HL)	0.0010	0.3078
B3	!A1&A2&!A3&!B1&!B2	0.0100	ZN(HL)	0.0010	0.2347

continues on next page

Table 263 – continued from previous page

B3	!A1&A2&A3&!B1&!B2	0.0100	ZN(HL)	0.0010	0.2348
B3	A1&!A2&!A3&!B1&!B2	0.0100	ZN(HL)	0.0010	0.1587
B3	A1&!A2&A3&!B1&!B2	0.0100	ZN(HL)	0.0010	0.1587
B3	A1&A2&!A3&!B1&!B2	0.0100	ZN(HL)	0.0010	0.1587
B3	A1&A2&A3&!B1&!B2	0.0100	ZN(HL)	0.0010	0.1585
A3	!A1&!A2&!B1&!B2&B3	0.0100	ZN(LH)	0.0010	0.7874
A3	!A1&!A2&!B1&B2&!B3	0.0100	ZN(LH)	0.0010	0.7002
A3	!A1&!A2&!B1&B2&B3	0.0100	ZN(LH)	0.0010	0.6984
A3	!A1&!A2&B1&!B2&!B3	0.0100	ZN(LH)	0.0010	0.6112
A3	!A1&!A2&B1&!B2&B3	0.0100	ZN(LH)	0.0010	0.6094
A3	!A1&!A2&B1&B2&!B3	0.0100	ZN(LH)	0.0010	0.6094
A3	!A1&!A2&B1&B2&B3	0.0100	ZN(LH)	0.0010	0.6083
A3	!A1&!A2&!B1&!B2&B3	0.0100	ZN(HL)	0.0010	0.3085
A3	!A1&!A2&!B1&B2&!B3	0.0100	ZN(HL)	0.0010	0.2343
A3	!A1&!A2&!B1&B2&B3	0.0100	ZN(HL)	0.0010	0.2344
A3	!A1&!A2&B1&!B2&!B3	0.0100	ZN(HL)	0.0010	0.1581
A3	!A1&!A2&B1&!B2&B3	0.0100	ZN(HL)	0.0010	0.1580
A3	!A1&!A2&B1&B2&!B3	0.0100	ZN(HL)	0.0010	0.1580
A3	!A1&!A2&B1&B2&B3	0.0100	ZN(HL)	0.0010	0.1579
A1	!A2&!A3&!B1&!B2&B3	0.0100	ZN(HL)	0.0010	0.1705
A1	!A2&!A3&!B1&B2&!B3	0.0100	ZN(HL)	0.0010	0.0963
A1	!A2&!A3&!B1&B2&B3	0.0100	ZN(HL)	0.0010	0.0965
A1	!A2&!A3&B1&!B2&!B3	0.0100	ZN(HL)	0.0010	0.0185
A1	!A2&!A3&B1&!B2&B3	0.0100	ZN(HL)	0.0010	0.0183
A1	!A2&!A3&B1&B2&!B3	0.0100	ZN(HL)	0.0010	0.0183
A1	!A2&!A3&B1&B2&B3	0.0100	ZN(HL)	0.0010	0.0183
B2	!A1&!A2&A3&!B1&!B3	0.0100	ZN(HL)	0.0010	0.2410
B2	!A1&A2&!A3&!B1&!B3	0.0100	ZN(HL)	0.0010	0.1686
B2	!A1&A2&A3&!B1&!B3	0.0100	ZN(HL)	0.0010	0.1682
B2	A1&!A2&!A3&!B1&!B3	0.0100	ZN(HL)	0.0010	0.0919
B2	A1&!A2&A3&!B1&!B3	0.0100	ZN(HL)	0.0010	0.0920
B2	A1&A2&!A3&!B1&!B3	0.0100	ZN(HL)	0.0010	0.0920
B2	A1&A2&A3&!B1&!B3	0.0100	ZN(HL)	0.0010	0.0922
B2(LH)	!A1&!A2&!A3&!B1&!B3	0.0100	n/a	n/a	-0.1194
B2(LH)	!A1&!A2&!A3&!B1&B3	0.0100	n/a	n/a	-0.1159
B2(LH)	!A1&!A2&!A3&B1&!B3	0.0100	n/a	n/a	-0.1158
B2(LH)	!A1&!A2&!A3&B1&B3	0.0100	n/a	n/a	-0.1115
B2(LH)	!A1&!A2&A3&!B1&B3	0.0100	n/a	n/a	-0.0362
B2(LH)	!A1&!A2&A3&B1&!B3	0.0100	n/a	n/a	-0.0990
B2(LH)	!A1&!A2&A3&B1&B3	0.0100	n/a	n/a	-0.0877
B2(LH)	!A1&A2&!A3&!B1&B3	0.0100	n/a	n/a	-0.0362
B2(LH)	!A1&A2&!A3&B1&!B3	0.0100	n/a	n/a	-0.0990
B2(LH)	!A1&A2&!A3&B1&B3	0.0100	n/a	n/a	-0.0877
B2(LH)	!A1&A2&A3&!B1&B3	0.0100	n/a	n/a	-0.0361
B2(LH)	!A1&A2&A3&B1&!B3	0.0100	n/a	n/a	-0.0990
B2(LH)	!A1&A2&A3&B1&B3	0.0100	n/a	n/a	-0.0877
B2(LH)	A1&!A2&!A3&!B1&B3	0.0100	n/a	n/a	-0.0362
B2(LH)	A1&!A2&!A3&B1&!B3	0.0100	n/a	n/a	-0.0990
B2(LH)	A1&!A2&!A3&B1&B3	0.0100	n/a	n/a	-0.0877
B2(LH)	A1&!A2&A3&!B1&B3	0.0100	n/a	n/a	-0.0362
B2(LH)	A1&!A2&A3&B1&!B3	0.0100	n/a	n/a	-0.0990
B2(LH)	A1&!A2&A3&B1&B3	0.0100	n/a	n/a	-0.0877

continues on next page

Table 263 – continued from previous page

B2(LH)	A1&A2&!A3&!B1&B3	0.0100	n/a	n/a	-0.0362
B2(LH)	A1&A2&!A3&B1&!B3	0.0100	n/a	n/a	-0.0990
B2(LH)	A1&A2&!A3&B1&B3	0.0100	n/a	n/a	-0.0876
B2(LH)	A1&A2&A3&!B1&B3	0.0100	n/a	n/a	-0.0362
B2(LH)	A1&A2&A3&B1&!B3	0.0100	n/a	n/a	-0.0990
B2(LH)	A1&A2&A3&B1&B3	0.0100	n/a	n/a	-0.0877
A3(LH)	!A1&!A2&!B1&!B2&!B3	0.0100	n/a	n/a	0.1572
A3(LH)	!A1&A2&!B1&!B2&!B3	0.0100	n/a	n/a	-0.1300
A3(LH)	A1&!A2&!B1&!B2&!B3	0.0100	n/a	n/a	-0.1177
A3(LH)	A1&A2&!B1&!B2&!B3	0.0100	n/a	n/a	-0.1274
A3(LH)	!A1&A2&!B1&!B2&B3	0.0100	n/a	n/a	-0.1035
A3(LH)	!A1&A2&!B1&B2&!B3	0.0100	n/a	n/a	-0.1035
A3(LH)	!A1&A2&!B1&B2&B3	0.0100	n/a	n/a	-0.1035
A3(LH)	!A1&A2&B1&!B2&!B3	0.0100	n/a	n/a	-0.1035
A3(LH)	!A1&A2&B1&!B2&B3	0.0100	n/a	n/a	-0.1035
A3(LH)	!A1&A2&B1&B2&!B3	0.0100	n/a	n/a	-0.1035
A3(LH)	!A1&A2&B1&B2&B3	0.0100	n/a	n/a	-0.1035
A3(LH)	A1&!A2&!B1&!B2&B3	0.0100	n/a	n/a	-0.0988
A3(LH)	A1&!A2&!B1&B2&!B3	0.0100	n/a	n/a	-0.0988
A3(LH)	A1&!A2&!B1&B2&B3	0.0100	n/a	n/a	-0.0988
A3(LH)	A1&!A2&B1&!B2&!B3	0.0100	n/a	n/a	-0.0988
A3(LH)	A1&!A2&B1&!B2&B3	0.0100	n/a	n/a	-0.0988
A3(LH)	A1&!A2&B1&B2&!B3	0.0100	n/a	n/a	-0.0988
A3(LH)	A1&!A2&B1&B2&B3	0.0100	n/a	n/a	-0.0988
A3(LH)	A1&A2&!B1&!B2&B3	0.0100	n/a	n/a	-0.1128
A3(LH)	A1&A2&!B1&B2&!B3	0.0100	n/a	n/a	-0.1128
A3(LH)	A1&A2&!B1&B2&B3	0.0100	n/a	n/a	-0.1128
A3(LH)	A1&A2&B1&!B2&!B3	0.0100	n/a	n/a	-0.1128
A3(LH)	A1&A2&B1&!B2&B3	0.0100	n/a	n/a	-0.1128
A3(LH)	A1&A2&B1&B2&!B3	0.0100	n/a	n/a	-0.1128
A3(LH)	A1&A2&B1&B2&B3	0.0100	n/a	n/a	-0.1128
A3(HL)	!A1&!A2&!B1&!B2&!B3	0.0100	n/a	n/a	0.1338
A3(HL)	!A1&A2&!B1&!B2&!B3	0.0100	n/a	n/a	0.1347
A3(HL)	A1&!A2&!B1&!B2&!B3	0.0100	n/a	n/a	0.1345
A3(HL)	A1&A2&!B1&!B2&!B3	0.0100	n/a	n/a	0.1348
A3(HL)	!A1&A2&!B1&!B2&B3	0.0100	n/a	n/a	0.1189
A3(HL)	!A1&A2&!B1&B2&!B3	0.0100	n/a	n/a	0.1189
A3(HL)	!A1&A2&!B1&B2&B3	0.0100	n/a	n/a	0.1190
A3(HL)	!A1&A2&B1&!B2&!B3	0.0100	n/a	n/a	0.1189
A3(HL)	!A1&A2&B1&!B2&B3	0.0100	n/a	n/a	0.1190
A3(HL)	!A1&A2&B1&B2&!B3	0.0100	n/a	n/a	0.1190
A3(HL)	!A1&A2&B1&B2&B3	0.0100	n/a	n/a	0.1189
A3(HL)	A1&!A2&!B1&!B2&B3	0.0100	n/a	n/a	0.1190
A3(HL)	A1&!A2&!B1&B2&!B3	0.0100	n/a	n/a	0.1190
A3(HL)	A1&!A2&!B1&B2&B3	0.0100	n/a	n/a	0.1190
A3(HL)	A1&!A2&B1&!B2&!B3	0.0100	n/a	n/a	0.1190
A3(HL)	A1&!A2&B1&!B2&B3	0.0100	n/a	n/a	0.1190
A3(HL)	A1&!A2&B1&B2&!B3	0.0100	n/a	n/a	0.1190
A3(HL)	A1&!A2&B1&B2&B3	0.0100	n/a	n/a	0.1190
A3(HL)	A1&A2&!B1&!B2&B3	0.0100	n/a	n/a	0.1189
A3(HL)	A1&A2&!B1&B2&!B3	0.0100	n/a	n/a	0.1189
A3(HL)	A1&A2&!B1&B2&B3	0.0100	n/a	n/a	0.1190

continues on next page

Table 263 – continued from previous page

A3(HL)	A1&A2&B1&!B2&!B3	0.0100	n/a	n/a	0.1189
A3(HL)	A1&A2&B1&!B2&B3	0.0100	n/a	n/a	0.1190
A3(HL)	A1&A2&B1&B2&!B3	0.0100	n/a	n/a	0.1190
A3(HL)	A1&A2&B1&B2&B3	0.0100	n/a	n/a	0.1189
B2(HL)	!A1&!A2&!A3&!B1&!B3	0.0100	n/a	n/a	0.1283
B2(HL)	!A1&!A2&!A3&!B1&B3	0.0100	n/a	n/a	0.1191
B2(HL)	!A1&!A2&!A3&B1&!B3	0.0100	n/a	n/a	0.1192
B2(HL)	!A1&!A2&!A3&B1&B3	0.0100	n/a	n/a	0.0710
B2(HL)	!A1&!A2&A3&!B1&B3	0.0100	n/a	n/a	0.0764
B2(HL)	!A1&!A2&A3&B1&!B3	0.0100	n/a	n/a	0.1192
B2(HL)	!A1&!A2&A3&B1&B3	0.0100	n/a	n/a	0.0710
B2(HL)	!A1&A2&!A3&!B1&B3	0.0100	n/a	n/a	0.0764
B2(HL)	!A1&A2&!A3&B1&!B3	0.0100	n/a	n/a	0.1192
B2(HL)	!A1&A2&!A3&B1&B3	0.0100	n/a	n/a	0.0710
B2(HL)	!A1&A2&A3&!B1&B3	0.0100	n/a	n/a	0.0764
B2(HL)	!A1&A2&A3&B1&!B3	0.0100	n/a	n/a	0.1192
B2(HL)	!A1&A2&A3&B1&B3	0.0100	n/a	n/a	0.0710
B2(HL)	A1&!A2&!A3&!B1&B3	0.0100	n/a	n/a	0.0764
B2(HL)	A1&!A2&!A3&B1&!B3	0.0100	n/a	n/a	0.1192
B2(HL)	A1&!A2&!A3&B1&B3	0.0100	n/a	n/a	0.0710
B2(HL)	A1&!A2&A3&!B1&B3	0.0100	n/a	n/a	0.0764
B2(HL)	A1&!A2&A3&B1&!B3	0.0100	n/a	n/a	0.1192
B2(HL)	A1&!A2&A3&B1&B3	0.0100	n/a	n/a	0.0710
B2(HL)	A1&A2&!A3&!B1&B3	0.0100	n/a	n/a	0.0764
B2(HL)	A1&A2&!A3&B1&!B3	0.0100	n/a	n/a	0.1192
B2(HL)	A1&A2&!A3&B1&B3	0.0100	n/a	n/a	0.0710
B2(HL)	A1&A2&A3&!B1&B3	0.0100	n/a	n/a	0.0764
B2(HL)	A1&A2&A3&B1&!B3	0.0100	n/a	n/a	0.1192
B2(HL)	A1&A2&A3&B1&B3	0.0100	n/a	n/a	0.0710
B3(LH)	!A1&!A2&!A3&!B1&!B2	0.0100	n/a	n/a	-0.1188
B3(LH)	!A1&!A2&!A3&!B1&B2	0.0100	n/a	n/a	-0.1153
B3(LH)	!A1&!A2&!A3&B1&!B2	0.0100	n/a	n/a	-0.1028
B3(LH)	!A1&!A2&!A3&B1&B2	0.0100	n/a	n/a	-0.1128
B3(LH)	!A1&!A2&A3&!B1&B2	0.0100	n/a	n/a	-0.1034
B3(LH)	!A1&!A2&A3&B1&!B2	0.0100	n/a	n/a	-0.0989
B3(LH)	!A1&!A2&A3&B1&B2	0.0100	n/a	n/a	-0.1127
B3(LH)	!A1&A2&!A3&!B1&B2	0.0100	n/a	n/a	-0.1034
B3(LH)	!A1&A2&!A3&B1&!B2	0.0100	n/a	n/a	-0.0989
B3(LH)	!A1&A2&!A3&B1&B2	0.0100	n/a	n/a	-0.1128
B3(LH)	!A1&A2&A3&!B1&B2	0.0100	n/a	n/a	-0.1034
B3(LH)	!A1&A2&A3&B1&!B2	0.0100	n/a	n/a	-0.0989
B3(LH)	!A1&A2&A3&B1&B2	0.0100	n/a	n/a	-0.1127
B3(LH)	A1&!A2&!A3&!B1&B2	0.0100	n/a	n/a	-0.1034
B3(LH)	A1&!A2&!A3&B1&!B2	0.0100	n/a	n/a	-0.0989
B3(LH)	A1&!A2&!A3&B1&B2	0.0100	n/a	n/a	-0.1127
B3(LH)	A1&!A2&A3&!B1&B2	0.0100	n/a	n/a	-0.1034
B3(LH)	A1&!A2&A3&B1&!B2	0.0100	n/a	n/a	-0.0989
B3(LH)	A1&!A2&A3&B1&B2	0.0100	n/a	n/a	-0.1127
B3(LH)	A1&A2&!A3&!B1&B2	0.0100	n/a	n/a	-0.1034
B3(LH)	A1&A2&!A3&B1&!B2	0.0100	n/a	n/a	-0.0989
B3(LH)	A1&A2&!A3&B1&B2	0.0100	n/a	n/a	-0.1127
B3(LH)	A1&A2&A3&!B1&B2	0.0100	n/a	n/a	-0.1034

continues on next page

Table 263 – continued from previous page

B3(LH)	A1&A2&A3&B1&!B2	0.0100	n/a	n/a	-0.0989
B3(LH)	A1&A2&A3&B1&B2	0.0100	n/a	n/a	-0.1127
B3(HL)	!A1&!A2&!A3&!B1&!B2	0.0100	n/a	n/a	0.1281
B3(HL)	!A1&!A2&!A3&!B1&B2	0.0100	n/a	n/a	0.1190
B3(HL)	!A1&!A2&!A3&B1&!B2	0.0100	n/a	n/a	0.1190
B3(HL)	!A1&!A2&!A3&B1&B2	0.0100	n/a	n/a	0.1190
B3(HL)	!A1&!A2&A3&!B1&B2	0.0100	n/a	n/a	0.1190
B3(HL)	!A1&!A2&A3&B1&!B2	0.0100	n/a	n/a	0.1190
B3(HL)	!A1&!A2&A3&B1&B2	0.0100	n/a	n/a	0.1189
B3(HL)	!A1&A2&!A3&!B1&B2	0.0100	n/a	n/a	0.1190
B3(HL)	!A1&A2&!A3&B1&!B2	0.0100	n/a	n/a	0.1190
B3(HL)	!A1&A2&!A3&B1&B2	0.0100	n/a	n/a	0.1189
B3(HL)	!A1&A2&A3&!B1&B2	0.0100	n/a	n/a	0.1189
B3(HL)	!A1&A2&A3&B1&!B2	0.0100	n/a	n/a	0.1190
B3(HL)	!A1&A2&A3&B1&B2	0.0100	n/a	n/a	0.1189
B3(HL)	A1&!A2&!A3&!B1&B2	0.0100	n/a	n/a	0.1190
B3(HL)	A1&!A2&!A3&B1&!B2	0.0100	n/a	n/a	0.1190
B3(HL)	A1&!A2&!A3&B1&B2	0.0100	n/a	n/a	0.1189
B3(HL)	A1&!A2&A3&!B1&B2	0.0100	n/a	n/a	0.1189
B3(HL)	A1&!A2&A3&B1&!B2	0.0100	n/a	n/a	0.1190
B3(HL)	A1&!A2&A3&B1&B2	0.0100	n/a	n/a	0.1189
B3(HL)	A1&A2&!A3&!B1&B2	0.0100	n/a	n/a	0.1189
B3(HL)	A1&A2&!A3&B1&!B2	0.0100	n/a	n/a	0.1190
B3(HL)	A1&A2&!A3&B1&B2	0.0100	n/a	n/a	0.1189
B3(HL)	A1&A2&A3&!B1&B2	0.0100	n/a	n/a	0.1189
B3(HL)	A1&A2&A3&B1&!B2	0.0100	n/a	n/a	0.1190
B3(HL)	A1&A2&A3&B1&B2	0.0100	n/a	n/a	0.1189
A2(LH)	!A1&!A3&!B1&!B2&!B3	0.0100	n/a	n/a	0.1570
A2(LH)	!A1&A3&!B1&!B2&!B3	0.0100	n/a	n/a	-0.1306
A2(LH)	A1&!A3&!B1&!B2&!B3	0.0100	n/a	n/a	-0.1304
A2(LH)	A1&A3&!B1&!B2&!B3	0.0100	n/a	n/a	-0.1262
A2(LH)	!A1&A3&!B1&!B2&B3	0.0100	n/a	n/a	-0.0362
A2(LH)	!A1&A3&!B1&B2&!B3	0.0100	n/a	n/a	-0.0361
A2(LH)	!A1&A3&!B1&B2&B3	0.0100	n/a	n/a	-0.0361
A2(LH)	!A1&A3&B1&!B2&!B3	0.0100	n/a	n/a	-0.0361
A2(LH)	!A1&A3&B1&!B2&B3	0.0100	n/a	n/a	-0.0361
A2(LH)	!A1&A3&B1&B2&!B3	0.0100	n/a	n/a	-0.0361
A2(LH)	!A1&A3&B1&B2&B3	0.0100	n/a	n/a	-0.0361
A2(LH)	A1&!A3&!B1&!B2&B3	0.0100	n/a	n/a	-0.0990
A2(LH)	A1&!A3&!B1&B2&!B3	0.0100	n/a	n/a	-0.0990
A2(LH)	A1&!A3&!B1&B2&B3	0.0100	n/a	n/a	-0.0990
A2(LH)	A1&!A3&B1&!B2&!B3	0.0100	n/a	n/a	-0.0990
A2(LH)	A1&!A3&B1&!B2&B3	0.0100	n/a	n/a	-0.0990
A2(LH)	A1&!A3&B1&B2&!B3	0.0100	n/a	n/a	-0.0990
A2(LH)	A1&!A3&B1&B2&B3	0.0100	n/a	n/a	-0.0990
A2(LH)	A1&A3&!B1&!B2&B3	0.0100	n/a	n/a	-0.0878
A2(LH)	A1&A3&!B1&B2&!B3	0.0100	n/a	n/a	-0.0878
A2(LH)	A1&A3&!B1&B2&B3	0.0100	n/a	n/a	-0.0880
A2(LH)	A1&A3&B1&!B2&!B3	0.0100	n/a	n/a	-0.0878
A2(LH)	A1&A3&B1&!B2&B3	0.0100	n/a	n/a	-0.0880
A2(LH)	A1&A3&B1&B2&!B3	0.0100	n/a	n/a	-0.0878
A2(LH)	A1&A3&B1&B2&B3	0.0100	n/a	n/a	-0.0878

continues on next page

Table 263 – continued from previous page

A1(LH)	!A2&!A3&!B1&!B2&!B3	0.0100	n/a	n/a	0.1564
A1(LH)	!A2&A3&!B1&!B2&!B3	0.0100	n/a	n/a	-0.1187
A1(LH)	A2&!A3&!B1&!B2&!B3	0.0100	n/a	n/a	-0.1310
A1(LH)	A2&A3&!B1&!B2&!B3	0.0100	n/a	n/a	-0.1282
A1(LH)	!A2&A3&!B1&!B2&B3	0.0100	n/a	n/a	-0.0329
A1(LH)	!A2&A3&!B1&B2&!B3	0.0100	n/a	n/a	-0.0329
A1(LH)	!A2&A3&!B1&B2&B3	0.0100	n/a	n/a	-0.0329
A1(LH)	!A2&A3&B1&!B2&!B3	0.0100	n/a	n/a	-0.0329
A1(LH)	!A2&A3&B1&!B2&B3	0.0100	n/a	n/a	-0.0329
A1(LH)	!A2&A3&B1&B2&!B3	0.0100	n/a	n/a	-0.0329
A1(LH)	!A2&A3&B1&B2&B3	0.0100	n/a	n/a	-0.0329
A1(LH)	A2&!A3&!B1&!B2&B3	0.0100	n/a	n/a	-0.0338
A1(LH)	A2&!A3&!B1&B2&!B3	0.0100	n/a	n/a	-0.0338
A1(LH)	A2&!A3&!B1&B2&B3	0.0100	n/a	n/a	-0.0338
A1(LH)	A2&!A3&B1&!B2&!B3	0.0100	n/a	n/a	-0.0338
A1(LH)	A2&!A3&B1&!B2&B3	0.0100	n/a	n/a	-0.0338
A1(LH)	A2&!A3&B1&B2&!B3	0.0100	n/a	n/a	-0.0338
A1(LH)	A2&!A3&B1&B2&B3	0.0100	n/a	n/a	-0.0338
A1(LH)	A2&A3&!B1&!B2&B3	0.0100	n/a	n/a	-0.0338
A1(LH)	A2&A3&!B1&B2&!B3	0.0100	n/a	n/a	-0.0338
A1(LH)	A2&A3&!B1&B2&B3	0.0100	n/a	n/a	-0.0338
A1(LH)	A2&A3&B1&!B2&!B3	0.0100	n/a	n/a	-0.0338
A1(LH)	A2&A3&B1&!B2&B3	0.0100	n/a	n/a	-0.0338
A1(LH)	A2&A3&B1&B2&!B3	0.0100	n/a	n/a	-0.0338
A1(LH)	A2&A3&B1&B2&B3	0.0100	n/a	n/a	-0.0338
A2(HL)	!A1&!A3&!B1&!B2&!B3	0.0100	n/a	n/a	0.1341
A2(HL)	!A1&A3&!B1&!B2&!B3	0.0100	n/a	n/a	0.1344
A2(HL)	A1&!A3&!B1&!B2&!B3	0.0100	n/a	n/a	0.1349
A2(HL)	A1&A3&!B1&!B2&!B3	0.0100	n/a	n/a	0.0868
A2(HL)	!A1&A3&!B1&!B2&B3	0.0100	n/a	n/a	0.0752
A2(HL)	!A1&A3&!B1&B2&!B3	0.0100	n/a	n/a	0.0752
A2(HL)	!A1&A3&!B1&B2&B3	0.0100	n/a	n/a	0.0752
A2(HL)	!A1&A3&B1&!B2&!B3	0.0100	n/a	n/a	0.0752
A2(HL)	!A1&A3&B1&!B2&B3	0.0100	n/a	n/a	0.0752
A2(HL)	!A1&A3&B1&B2&!B3	0.0100	n/a	n/a	0.0752
A2(HL)	!A1&A3&B1&B2&B3	0.0100	n/a	n/a	0.0752
A2(HL)	A1&!A3&!B1&!B2&B3	0.0100	n/a	n/a	0.1192
A2(HL)	A1&!A3&!B1&B2&!B3	0.0100	n/a	n/a	0.1192
A2(HL)	A1&!A3&!B1&B2&B3	0.0100	n/a	n/a	0.1192
A2(HL)	A1&!A3&B1&!B2&!B3	0.0100	n/a	n/a	0.1192
A2(HL)	A1&!A3&B1&!B2&B3	0.0100	n/a	n/a	0.1192
A2(HL)	A1&!A3&B1&B2&!B3	0.0100	n/a	n/a	0.1192
A2(HL)	A1&!A3&B1&B2&B3	0.0100	n/a	n/a	0.1192
A2(HL)	A1&A3&!B1&!B2&B3	0.0100	n/a	n/a	0.0708
A2(HL)	A1&A3&!B1&B2&!B3	0.0100	n/a	n/a	0.0708
A2(HL)	A1&A3&!B1&B2&B3	0.0100	n/a	n/a	0.0708
A2(HL)	A1&A3&B1&!B2&!B3	0.0100	n/a	n/a	0.0708
A2(HL)	A1&A3&B1&!B2&B3	0.0100	n/a	n/a	0.0708
A2(HL)	A1&A3&B1&B2&!B3	0.0100	n/a	n/a	0.0708
A2(HL)	A1&A3&B1&B2&B3	0.0100	n/a	n/a	0.0708
B1(HL)	!A1&!A2&!A3&!B2&!B3	0.0100	n/a	n/a	0.1288
B1(HL)	!A1&!A2&!A3&!B2&B3	0.0100	n/a	n/a	0.1196

continues on next page

Table 263 – continued from previous page

B1(HL)	!A1&!A2&!A3&B2&!B3	0.0100	n/a	n/a	0.1196
B1(HL)	!A1&!A2&!A3&B2&B3	0.0100	n/a	n/a	0.1196
B1(HL)	!A1&!A2&A3&!B2&B3	0.0100	n/a	n/a	0.1564
B1(HL)	!A1&!A2&A3&B2&!B3	0.0100	n/a	n/a	0.0820
B1(HL)	!A1&!A2&A3&B2&B3	0.0100	n/a	n/a	0.0819
B1(HL)	!A1&A2&!A3&!B2&B3	0.0100	n/a	n/a	0.1564
B1(HL)	!A1&A2&!A3&B2&!B3	0.0100	n/a	n/a	0.0820
B1(HL)	!A1&A2&!A3&B2&B3	0.0100	n/a	n/a	0.0819
B1(HL)	!A1&A2&A3&!B2&B3	0.0100	n/a	n/a	0.1564
B1(HL)	!A1&A2&A3&B2&!B3	0.0100	n/a	n/a	0.0820
B1(HL)	!A1&A2&A3&B2&B3	0.0100	n/a	n/a	0.0819
B1(HL)	A1&!A2&!A3&!B2&B3	0.0100	n/a	n/a	0.1564
B1(HL)	A1&!A2&!A3&B2&!B3	0.0100	n/a	n/a	0.0819
B1(HL)	A1&!A2&!A3&B2&B3	0.0100	n/a	n/a	0.0819
B1(HL)	A1&!A2&A3&!B2&B3	0.0100	n/a	n/a	0.1564
B1(HL)	A1&!A2&A3&B2&!B3	0.0100	n/a	n/a	0.0819
B1(HL)	A1&!A2&A3&B2&B3	0.0100	n/a	n/a	0.0819
B1(HL)	A1&A2&!A3&!B2&B3	0.0100	n/a	n/a	0.1564
B1(HL)	A1&A2&!A3&B2&!B3	0.0100	n/a	n/a	0.0819
B1(HL)	A1&A2&!A3&B2&B3	0.0100	n/a	n/a	0.0819
B1(HL)	A1&A2&A3&!B2&B3	0.0100	n/a	n/a	0.1564
B1(HL)	A1&A2&A3&B2&!B3	0.0100	n/a	n/a	0.0819
B1(HL)	A1&A2&A3&B2&B3	0.0100	n/a	n/a	0.0819
A1(HL)	!A2&!A3&!B1&!B2&!B3	0.0100	n/a	n/a	0.1343
A1(HL)	!A2&A3&!B1&!B2&!B3	0.0100	n/a	n/a	0.1349
A1(HL)	A2&!A3&!B1&!B2&!B3	0.0100	n/a	n/a	0.1349
A1(HL)	A2&A3&!B1&!B2&!B3	0.0100	n/a	n/a	0.1351
A1(HL)	!A2&A3&!B1&!B2&B3	0.0100	n/a	n/a	0.1551
A1(HL)	!A2&A3&!B1&B2&!B3	0.0100	n/a	n/a	0.1551
A1(HL)	!A2&A3&!B1&B2&B3	0.0100	n/a	n/a	0.1552
A1(HL)	!A2&A3&B1&!B2&!B3	0.0100	n/a	n/a	0.1551
A1(HL)	!A2&A3&B1&!B2&B3	0.0100	n/a	n/a	0.1552
A1(HL)	!A2&A3&B1&B2&!B3	0.0100	n/a	n/a	0.1552
A1(HL)	!A2&A3&B1&B2&B3	0.0100	n/a	n/a	0.1552
A1(HL)	A2&!A3&!B1&!B2&B3	0.0100	n/a	n/a	0.0819
A1(HL)	A2&!A3&!B1&B2&!B3	0.0100	n/a	n/a	0.0819
A1(HL)	A2&!A3&!B1&B2&B3	0.0100	n/a	n/a	0.0819
A1(HL)	A2&!A3&B1&!B2&!B3	0.0100	n/a	n/a	0.0819
A1(HL)	A2&!A3&B1&!B2&B3	0.0100	n/a	n/a	0.0819
A1(HL)	A2&!A3&B1&B2&!B3	0.0100	n/a	n/a	0.0819
A1(HL)	A2&!A3&B1&B2&B3	0.0100	n/a	n/a	0.0819
A1(HL)	A2&A3&!B1&!B2&B3	0.0100	n/a	n/a	0.0819
A1(HL)	A2&A3&!B1&B2&!B3	0.0100	n/a	n/a	0.0819
A1(HL)	A2&A3&!B1&B2&B3	0.0100	n/a	n/a	0.0819
A1(HL)	A2&A3&B1&!B2&!B3	0.0100	n/a	n/a	0.0819
A1(HL)	A2&A3&B1&!B2&B3	0.0100	n/a	n/a	0.0819
A1(HL)	A2&A3&B1&B2&!B3	0.0100	n/a	n/a	0.0819
A1(HL)	A2&A3&B1&B2&B3	0.0100	n/a	n/a	0.0819
B1(LH)	!A1&!A2&!A3&!B2&!B3	0.0100	n/a	n/a	-0.1198
B1(LH)	!A1&!A2&!A3&!B2&B3	0.0100	n/a	n/a	-0.1042
B1(LH)	!A1&!A2&!A3&B2&!B3	0.0100	n/a	n/a	-0.1165
B1(LH)	!A1&!A2&!A3&B2&B3	0.0100	n/a	n/a	-0.1138

continues on next page

Table 263 – continued from previous page

B1(LH)	!A1&!A2&A3&!B2&B3	0.0100	n/a	n/a	-0.0330
B1(LH)	!A1&!A2&A3&B2&!B3	0.0100	n/a	n/a	-0.0339
B1(LH)	!A1&!A2&A3&B2&B3	0.0100	n/a	n/a	-0.0339
B1(LH)	!A1&A2&!A3&!B2&B3	0.0100	n/a	n/a	-0.0330
B1(LH)	!A1&A2&!A3&B2&!B3	0.0100	n/a	n/a	-0.0339
B1(LH)	!A1&A2&!A3&B2&B3	0.0100	n/a	n/a	-0.0339
B1(LH)	!A1&A2&A3&!B2&B3	0.0100	n/a	n/a	-0.0330
B1(LH)	!A1&A2&A3&B2&!B3	0.0100	n/a	n/a	-0.0339
B1(LH)	!A1&A2&A3&B2&B3	0.0100	n/a	n/a	-0.0339
B1(LH)	A1&!A2&!A3&!B2&B3	0.0100	n/a	n/a	-0.0330
B1(LH)	A1&!A2&!A3&B2&!B3	0.0100	n/a	n/a	-0.0339
B1(LH)	A1&!A2&!A3&B2&B3	0.0100	n/a	n/a	-0.0339
B1(LH)	A1&!A2&A3&!B2&B3	0.0100	n/a	n/a	-0.0330
B1(LH)	A1&!A2&A3&B2&!B3	0.0100	n/a	n/a	-0.0339
B1(LH)	A1&!A2&A3&B2&B3	0.0100	n/a	n/a	-0.0339
B1(LH)	A1&A2&!A3&!B2&B3	0.0100	n/a	n/a	-0.0330
B1(LH)	A1&A2&!A3&B2&!B3	0.0100	n/a	n/a	-0.0339
B1(LH)	A1&A2&!A3&B2&B3	0.0100	n/a	n/a	-0.0339
B1(LH)	A1&A2&A3&!B2&B3	0.0100	n/a	n/a	-0.0330
B1(LH)	A1&A2&A3&B2&!B3	0.0100	n/a	n/a	-0.0339
B1(LH)	A1&A2&A3&B2&B3	0.0100	n/a	n/a	-0.0339

LEAKAGE POWER

When Condition	Power (nW)
!A1&!A2&!A3&!B1&!B2&!B3	0.2015
!A1&!A2&!A3&!B1&!B2&B3	0.2035
!A1&!A2&!A3&!B1&B2&!B3	0.2035
!A1&!A2&!A3&!B1&B2&B3	0.2035
!A1&!A2&!A3&B1&!B2&!B3	0.2035
!A1&!A2&!A3&B1&!B2&B3	0.2035
!A1&!A2&!A3&B1&B2&!B3	0.2035
!A1&!A2&!A3&B1&B2&B3	0.2035
!A1&!A2&A3&!B1&!B2&!B3	0.4404
!A1&A2&!A3&!B1&!B2&!B3	0.4404
!A1&A2&A3&!B1&!B2&!B3	0.4416
A1&!A2&!A3&!B1&!B2&!B3	0.4404
A1&!A2&A3&!B1&!B2&!B3	0.4416
A1&A2&!A3&!B1&!B2&!B3	0.4416
A1&A2&A3&!B1&!B2&!B3	0.4423
!A1&!A2&A3&!B1&!B2&B3	0.4403
!A1&!A2&A3&!B1&B2&!B3	0.3698
!A1&!A2&A3&!B1&B2&B3	0.3698
!A1&!A2&A3&B1&!B2&!B3	0.2989
!A1&!A2&A3&B1&!B2&B3	0.2989
!A1&!A2&A3&B1&B2&!B3	0.2989
!A1&!A2&A3&B1&B2&B3	0.2989

continues on next page

Table 264 – continued from previous page

!A1&A2&!A3&!B1&!B2&B3	0.3698
!A1&A2&!A3&!B1&B2&!B3	0.2993
!A1&A2&!A3&!B1&B2&B3	0.2993
!A1&A2&!A3&B1&!B2&!B3	0.2283
!A1&A2&!A3&B1&!B2&B3	0.2283
!A1&A2&!A3&B1&B2&!B3	0.2283
!A1&A2&!A3&B1&B2&B3	0.2283
!A1&A2&A3&!B1&!B2&B3	0.3698
!A1&A2&A3&!B1&B2&!B3	0.2993
!A1&A2&A3&!B1&B2&B3	0.2993
!A1&A2&A3&B1&!B2&!B3	0.2283
!A1&A2&A3&B1&!B2&B3	0.2283
!A1&A2&A3&B1&B2&!B3	0.2283
!A1&A2&A3&B1&B2&B3	0.2283
A1&!A2&!A3&!B1&!B2&B3	0.2989
A1&!A2&!A3&!B1&B2&!B3	0.2283
A1&!A2&!A3&!B1&B2&B3	0.2283
A1&!A2&!A3&B1&!B2&!B3	0.1574
A1&!A2&!A3&B1&!B2&B3	0.1574
A1&!A2&!A3&B1&B2&!B3	0.1574
A1&!A2&!A3&B1&B2&B3	0.1574
A1&!A2&A3&!B1&!B2&B3	0.2989
A1&!A2&A3&!B1&B2&!B3	0.2283
A1&!A2&A3&!B1&B2&B3	0.2283
A1&!A2&A3&B1&!B2&!B3	0.1574
A1&!A2&A3&B1&!B2&B3	0.1574
A1&!A2&A3&B1&B2&!B3	0.1574
A1&!A2&A3&B1&B2&B3	0.1574
A1&A2&!A3&!B1&!B2&B3	0.2989
A1&A2&!A3&!B1&B2&!B3	0.2283
A1&A2&!A3&!B1&B2&B3	0.2283
A1&A2&!A3&B1&!B2&!B3	0.1574
A1&A2&!A3&B1&!B2&B3	0.1574
A1&A2&!A3&B1&B2&!B3	0.1574
A1&A2&!A3&B1&B2&B3	0.1574
A1&A2&A3&!B1&!B2&B3	0.2989
A1&A2&A3&!B1&B2&!B3	0.2283
A1&A2&A3&!B1&B2&B3	0.2283
A1&A2&A3&B1&!B2&!B3	0.1574
A1&A2&A3&B1&!B2&B3	0.1574
A1&A2&A3&B1&B2&!B3	0.1574
A1&A2&A3&B1&B2&B3	0.1574

gf180mcu_fd_sc_mcu9t5v0__oai33_4

gf180mcu_fd_sc_mcu9t5v0__oai33_4 symbol

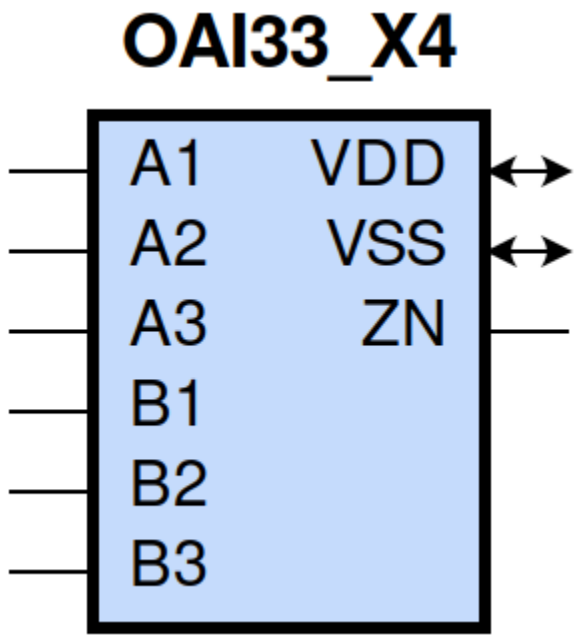

gf180mcu_fd_sc_mcu9t5v0__oai33_4 schematic

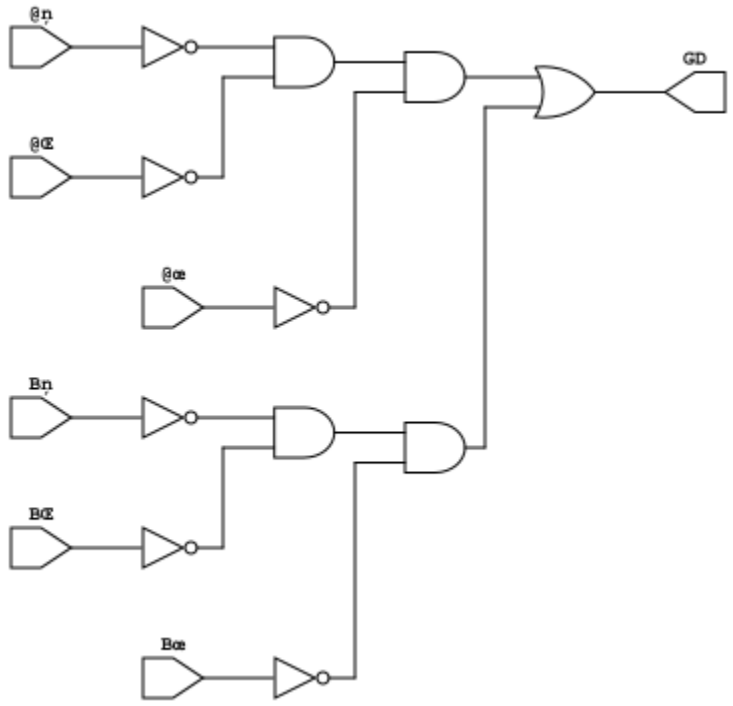

gf180mcu_fd_sc_mcu9t5v0__oai33_4 layout

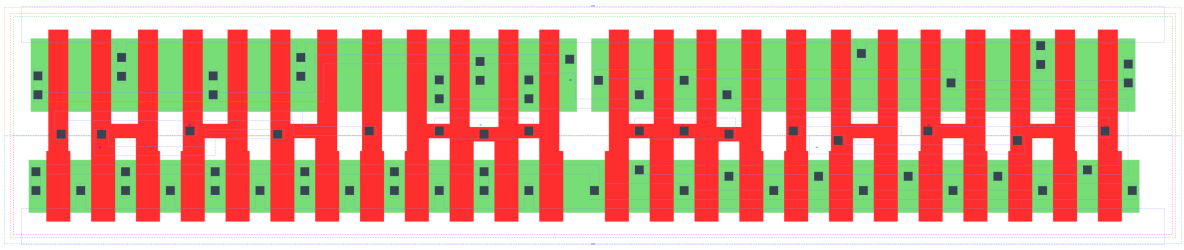

OAI33_X4 is a three 2-input OR into 2-input NAND with 4X drive strength

Attributes

Attribute	Value
area	143.942400 μm^2

OUTPUT FUNCTIONS

Output Pin	Function
ZN	(((!A1)&(!A2)&(!A3))|((!B1)&(!B2)&(!B3)))

TRUTH TABLE FOR ZN

A1	A2	A3	B1	B2	B3	ZN
0	0	0	?	?	?	1
?	?	?	0	0	0	1
1	?	?	1	?	?	0
1	?	?	?	1	?	0
1	?	?	?	?	1	0
?	1	?	1	?	?	0
?	1	?	?	1	?	0
?	1	?	?	?	1	0
?	?	1	1	?	?	0
?	?	1	?	1	?	0
?	?	1	?	?	1	0

FUNCTIONAL SCHEMATIC

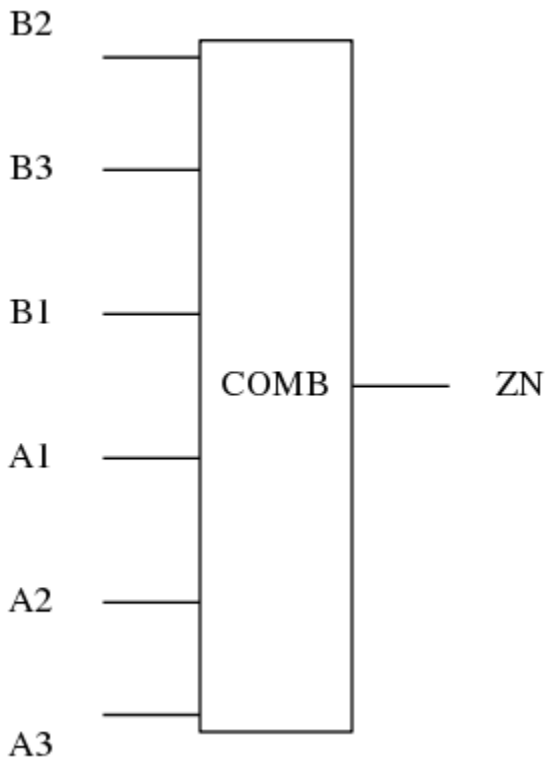

PIN CAPACITANCE (pf)

Pin	Type	Capacitance (pf)
B2	input	0.0275
B3	input	0.0266
B1	input	0.0269
A1	input	0.0272
A2	input	0.0279
A3	input	0.0270

DELAY AND OUTPUT TRANSITION TIME corresponding to min slew and load

Input Pin	Output	When Condition	Tin (ns)	Out Load (pf)	Delay (ns)	Tout (ns)
B2(HL)	ZN(LH)	!A1&!A2&A3&!B1&!B3	0.0100	0.0010	0.3807	0.3799

continues on next page

Table 265 – continued from previous page

B2(HL)	ZN(LH)	!A1&A2&!A3&!B1&!B3	0.0100	0.0010	0.3804	0.3276
B2(HL)	ZN(LH)	!A1&A2&A3&!B1&!B3	0.0100	0.0010	0.4164	0.3543
B2(HL)	ZN(LH)	A1&!A2&!A3&!B1&!B3	0.0100	0.0010	0.3579	0.2474
B2(HL)	ZN(LH)	A1&!A2&A3&!B1&!B3	0.0100	0.0010	0.3947	0.2748
B2(HL)	ZN(LH)	A1&A2&!A3&!B1&!B3	0.0100	0.0010	0.3948	0.2748
B2(HL)	ZN(LH)	A1&A2&A3&!B1&!B3	0.0100	0.0010	0.4275	0.3015
B2(LH)	ZN(HL)	!A1&!A2&A3&!B1&!B3	0.0100	0.0010	0.1609	0.0860
B2(LH)	ZN(HL)	!A1&A2&!A3&!B1&!B3	0.0100	0.0010	0.1491	0.0740
B2(LH)	ZN(HL)	!A1&A2&A3&!B1&!B3	0.0100	0.0010	0.1211	0.0657
B2(LH)	ZN(HL)	A1&!A2&!A3&!B1&!B3	0.0100	0.0010	0.1207	0.0559
B2(LH)	ZN(HL)	A1&!A2&A3&!B1&!B3	0.0100	0.0010	0.1003	0.0519
B2(LH)	ZN(HL)	A1&A2&!A3&!B1&!B3	0.0100	0.0010	0.1003	0.0519
B2(LH)	ZN(HL)	A1&A2&A3&!B1&!B3	0.0100	0.0010	0.0971	0.0590
B3(HL)	ZN(LH)	!A1&!A2&A3&!B1&!B2	0.0100	0.0010	0.4041	0.3800
B3(HL)	ZN(LH)	!A1&A2&!A3&!B1&!B2	0.0100	0.0010	0.4037	0.3277
B3(HL)	ZN(LH)	!A1&A2&A3&!B1&!B2	0.0100	0.0010	0.4395	0.3543
B3(HL)	ZN(LH)	A1&!A2&!A3&!B1&!B2	0.0100	0.0010	0.3813	0.2471
B3(HL)	ZN(LH)	A1&!A2&A3&!B1&!B2	0.0100	0.0010	0.4181	0.2748
B3(HL)	ZN(LH)	A1&A2&!A3&!B1&!B2	0.0100	0.0010	0.4181	0.2748
B3(HL)	ZN(LH)	A1&A2&A3&!B1&!B2	0.0100	0.0010	0.4508	0.3015
B3(LH)	ZN(HL)	!A1&!A2&A3&!B1&!B2	0.0100	0.0010	0.1729	0.0997
B3(LH)	ZN(HL)	!A1&A2&!A3&!B1&!B2	0.0100	0.0010	0.1585	0.0863
B3(LH)	ZN(HL)	!A1&A2&A3&!B1&!B2	0.0100	0.0010	0.1260	0.0754
B3(LH)	ZN(HL)	A1&!A2&!A3&!B1&!B2	0.0100	0.0010	0.1261	0.0670
B3(LH)	ZN(HL)	A1&!A2&A3&!B1&!B2	0.0100	0.0010	0.1026	0.0608
B3(LH)	ZN(HL)	A1&A2&!A3&!B1&!B2	0.0100	0.0010	0.1026	0.0607
B3(LH)	ZN(HL)	A1&A2&A3&!B1&!B2	0.0100	0.0010	0.0992	0.0679
B1(LH)	ZN(HL)	!A1&!A2&A3&!B2&!B3	0.0100	0.0010	0.1283	0.0660
B1(LH)	ZN(HL)	!A1&A2&!A3&!B2&!B3	0.0100	0.0010	0.1208	0.0552
B1(LH)	ZN(HL)	!A1&A2&A3&!B2&!B3	0.0100	0.0010	0.1006	0.0515
B1(LH)	ZN(HL)	A1&!A2&!A3&!B2&!B3	0.0100	0.0010	0.0961	0.0381
B1(LH)	ZN(HL)	A1&!A2&A3&!B2&!B3	0.0100	0.0010	0.0825	0.0380
B1(LH)	ZN(HL)	A1&A2&!A3&!B2&!B3	0.0100	0.0010	0.0825	0.0380
B1(LH)	ZN(HL)	A1&A2&A3&!B2&!B3	0.0100	0.0010	0.0800	0.0449
B1(HL)	ZN(LH)	!A1&!A2&A3&!B2&!B3	0.0100	0.0010	0.3068	0.3796
B1(HL)	ZN(LH)	!A1&A2&!A3&!B2&!B3	0.0100	0.0010	0.3065	0.3274
B1(HL)	ZN(LH)	!A1&A2&A3&!B2&!B3	0.0100	0.0010	0.3420	0.3540
B1(HL)	ZN(LH)	A1&!A2&!A3&!B2&!B3	0.0100	0.0010	0.2840	0.2468
B1(HL)	ZN(LH)	A1&!A2&A3&!B2&!B3	0.0100	0.0010	0.3205	0.2744
B1(HL)	ZN(LH)	A1&A2&!A3&!B2&!B3	0.0100	0.0010	0.3205	0.2744
B1(HL)	ZN(LH)	A1&A2&A3&!B2&!B3	0.0100	0.0010	0.3531	0.3009
A1(HL)	ZN(LH)	!A2&!A3&!B1&!B2&B3	0.0100	0.0010	0.1503	0.2450
A1(HL)	ZN(LH)	!A2&!A3&!B1&B2&!B3	0.0100	0.0010	0.1504	0.2032
A1(HL)	ZN(LH)	!A2&!A3&!B1&B2&B3	0.0100	0.0010	0.1491	0.2032
A1(HL)	ZN(LH)	!A2&!A3&B1&!B2&!B3	0.0100	0.0010	0.1357	0.1255
A1(HL)	ZN(LH)	!A2&!A3&B1&!B2&B3	0.0100	0.0010	0.1345	0.1254
A1(HL)	ZN(LH)	!A2&!A3&B1&B2&!B3	0.0100	0.0010	0.1345	0.1254
A1(HL)	ZN(LH)	!A2&!A3&B1&B2&B3	0.0100	0.0010	0.1338	0.1253
A1(LH)	ZN(HL)	!A2&!A3&!B1&!B2&B3	0.0100	0.0010	0.0887	0.0660
A1(LH)	ZN(HL)	!A2&!A3&!B1&B2&!B3	0.0100	0.0010	0.0815	0.0551
A1(LH)	ZN(HL)	!A2&!A3&!B1&B2&B3	0.0100	0.0010	0.0694	0.0421
A1(LH)	ZN(HL)	!A2&!A3&B1&!B2&!B3	0.0100	0.0010	0.0573	0.0359

continues on next page

Table 265 – continued from previous page

A1(LH)	ZN(HL)	!A2&!A3&B1&!B2&B3	0.0100	0.0010	0.0508	0.0283
A1(LH)	ZN(HL)	!A2&!A3&B1&B2&!B3	0.0100	0.0010	0.0508	0.0283
A1(LH)	ZN(HL)	!A2&!A3&B1&B2&B3	0.0100	0.0010	0.0485	0.0263
A2(HL)	ZN(LH)	!A1&!A3&!B1&!B2&B3	0.0100	0.0010	0.2216	0.2492
A2(HL)	ZN(LH)	!A1&!A3&!B1&B2&!B3	0.0100	0.0010	0.2216	0.2076
A2(HL)	ZN(LH)	!A1&!A3&!B1&B2&B3	0.0100	0.0010	0.2205	0.2076
A2(HL)	ZN(LH)	!A1&!A3&B1&!B2&!B3	0.0100	0.0010	0.2068	0.1298
A2(HL)	ZN(LH)	!A1&!A3&B1&!B2&B3	0.0100	0.0010	0.2056	0.1297
A2(HL)	ZN(LH)	!A1&!A3&B1&B2&!B3	0.0100	0.0010	0.2056	0.1297
A2(HL)	ZN(LH)	!A1&!A3&B1&B2&B3	0.0100	0.0010	0.2049	0.1297
A2(LH)	ZN(HL)	!A1&!A3&!B1&!B2&B3	0.0100	0.0010	0.1210	0.0859
A2(LH)	ZN(HL)	!A1&!A3&!B1&B2&!B3	0.0100	0.0010	0.1096	0.0740
A2(LH)	ZN(HL)	!A1&!A3&!B1&B2&B3	0.0100	0.0010	0.0913	0.0571
A2(LH)	ZN(HL)	!A1&!A3&B1&!B2&!B3	0.0100	0.0010	0.0805	0.0553
A2(LH)	ZN(HL)	!A1&!A3&B1&!B2&B3	0.0100	0.0010	0.0684	0.0427
A2(LH)	ZN(HL)	!A1&!A3&B1&B2&!B3	0.0100	0.0010	0.0684	0.0427
A2(LH)	ZN(HL)	!A1&!A3&B1&B2&B3	0.0100	0.0010	0.0645	0.0395
A3(HL)	ZN(LH)	!A1&!A2&!B1&!B2&B3	0.0100	0.0010	0.2449	0.2494
A3(HL)	ZN(LH)	!A1&!A2&!B1&B2&!B3	0.0100	0.0010	0.2449	0.2076
A3(HL)	ZN(LH)	!A1&!A2&!B1&B2&B3	0.0100	0.0010	0.2439	0.2076
A3(HL)	ZN(LH)	!A1&!A2&B1&!B2&!B3	0.0100	0.0010	0.2297	0.1298
A3(HL)	ZN(LH)	!A1&!A2&B1&!B2&B3	0.0100	0.0010	0.2286	0.1298
A3(HL)	ZN(LH)	!A1&!A2&B1&B2&!B3	0.0100	0.0010	0.2286	0.1298
A3(HL)	ZN(LH)	!A1&!A2&B1&B2&B3	0.0100	0.0010	0.2282	0.1298
A3(LH)	ZN(HL)	!A1&!A2&!B1&!B2&B3	0.0100	0.0010	0.1332	0.1011
A3(LH)	ZN(HL)	!A1&!A2&!B1&B2&!B3	0.0100	0.0010	0.1184	0.0880
A3(LH)	ZN(HL)	!A1&!A2&!B1&B2&B3	0.0100	0.0010	0.0964	0.0668
A3(LH)	ZN(HL)	!A1&!A2&B1&!B2&!B3	0.0100	0.0010	0.0847	0.0682
A3(LH)	ZN(HL)	!A1&!A2&B1&!B2&B3	0.0100	0.0010	0.0698	0.0506
A3(LH)	ZN(HL)	!A1&!A2&B1&B2&!B3	0.0100	0.0010	0.0698	0.0506
A3(LH)	ZN(HL)	!A1&!A2&B1&B2&B3	0.0100	0.0010	0.0653	0.0463

DYNAMIC ENERGY

Input Pin	When Condition	Tin (ns)	Output	Out Load (pf)	Energy (uW/MHz)
A1	!A2&!A3&!B1&!B2&B3	0.0100	ZN(LH)	0.0010	1.2716
A1	!A2&!A3&!B1&B2&!B3	0.0100	ZN(LH)	0.0010	1.0974
A1	!A2&!A3&!B1&B2&B3	0.0100	ZN(LH)	0.0010	1.0932
A1	!A2&!A3&B1&!B2&!B3	0.0100	ZN(LH)	0.0010	0.8547
A1	!A2&!A3&B1&!B2&B3	0.0100	ZN(LH)	0.0010	0.8505
A1	!A2&!A3&B1&B2&!B3	0.0100	ZN(LH)	0.0010	0.8505
A1	!A2&!A3&B1&B2&B3	0.0100	ZN(LH)	0.0010	0.8479
B2	!A1&!A2&A3&!B1&!B3	0.0100	ZN(LH)	0.0010	2.2276
B2	!A1&A2&!A3&!B1&!B3	0.0100	ZN(LH)	0.0010	2.0530
B2	!A1&A2&A3&!B1&!B3	0.0100	ZN(LH)	0.0010	2.1973
B2	A1&!A2&!A3&!B1&!B3	0.0100	ZN(LH)	0.0010	1.8182
B2	A1&!A2&A3&!B1&!B3	0.0100	ZN(LH)	0.0010	1.9630

continues on next page

Table 266 – continued from previous page

B2	A1&A2&!A3&!B1&!B3	0.0100	ZN(LH)	0.0010	1.9630
B2	A1&A2&A3&!B1&!B3	0.0100	ZN(LH)	0.0010	2.1044
B1	!A1&!A2&A3&!B2&!B3	0.0100	ZN(HL)	0.0010	0.3453
B1	!A1&A2&!A3&!B2&!B3	0.0100	ZN(HL)	0.0010	0.1974
B1	!A1&A2&A3&!B2&!B3	0.0100	ZN(HL)	0.0010	0.1973
B1	A1&!A2&!A3&!B2&!B3	0.0100	ZN(HL)	0.0010	0.0267
B1	A1&!A2&A3&!B2&!B3	0.0100	ZN(HL)	0.0010	0.0275
B1	A1&A2&!A3&!B2&!B3	0.0100	ZN(HL)	0.0010	0.0275
B1	A1&A2&A3&!B2&!B3	0.0100	ZN(HL)	0.0010	0.0275
A2	!A1&!A3&!B1&!B2&B3	0.0100	ZN(LH)	0.0010	1.5070
A2	!A1&!A3&!B1&B2&!B3	0.0100	ZN(LH)	0.0010	1.3328
A2	!A1&!A3&!B1&B2&B3	0.0100	ZN(LH)	0.0010	1.3292
A2	!A1&!A3&B1&!B2&!B3	0.0100	ZN(LH)	0.0010	1.0900
A2	!A1&!A3&B1&!B2&B3	0.0100	ZN(LH)	0.0010	1.0865
A2	!A1&!A3&B1&B2&!B3	0.0100	ZN(LH)	0.0010	1.0865
A2	!A1&!A3&B1&B2&B3	0.0100	ZN(LH)	0.0010	1.0844
B1	!A1&!A2&A3&!B2&!B3	0.0100	ZN(LH)	0.0010	1.9847
B1	!A1&A2&!A3&!B2&!B3	0.0100	ZN(LH)	0.0010	1.8102
B1	!A1&A2&A3&!B2&!B3	0.0100	ZN(LH)	0.0010	1.9537
B1	A1&!A2&!A3&!B2&!B3	0.0100	ZN(LH)	0.0010	1.5753
B1	A1&!A2&A3&!B2&!B3	0.0100	ZN(LH)	0.0010	1.7199
B1	A1&A2&!A3&!B2&!B3	0.0100	ZN(LH)	0.0010	1.7199
B1	A1&A2&A3&!B2&!B3	0.0100	ZN(LH)	0.0010	1.8614
B3	!A1&!A2&A3&!B1&!B2	0.0100	ZN(LH)	0.0010	2.4022
B3	!A1&A2&!A3&!B1&!B2	0.0100	ZN(LH)	0.0010	2.2276
B3	!A1&A2&A3&!B1&!B2	0.0100	ZN(LH)	0.0010	2.3715
B3	A1&!A2&!A3&!B1&!B2	0.0100	ZN(LH)	0.0010	1.9927
B3	A1&!A2&A3&!B1&!B2	0.0100	ZN(LH)	0.0010	2.1375
B3	A1&A2&!A3&!B1&!B2	0.0100	ZN(LH)	0.0010	2.1376
B3	A1&A2&A3&!B1&!B2	0.0100	ZN(LH)	0.0010	2.2790
A2	!A1&!A3&!B1&!B2&B3	0.0100	ZN(HL)	0.0010	0.5132
A2	!A1&!A3&!B1&B2&!B3	0.0100	ZN(HL)	0.0010	0.3650
A2	!A1&!A3&!B1&B2&B3	0.0100	ZN(HL)	0.0010	0.3657
A2	!A1&!A3&B1&!B2&!B3	0.0100	ZN(HL)	0.0010	0.1952
A2	!A1&!A3&B1&!B2&B3	0.0100	ZN(HL)	0.0010	0.1952
A2	!A1&!A3&B1&B2&!B3	0.0100	ZN(HL)	0.0010	0.1952
A2	!A1&!A3&B1&B2&B3	0.0100	ZN(HL)	0.0010	0.1949
B3	!A1&!A2&A3&!B1&!B2	0.0100	ZN(HL)	0.0010	0.6429
B3	!A1&A2&!A3&!B1&!B2	0.0100	ZN(HL)	0.0010	0.4946
B3	!A1&A2&A3&!B1&!B2	0.0100	ZN(HL)	0.0010	0.4942
B3	A1&!A2&!A3&!B1&!B2	0.0100	ZN(HL)	0.0010	0.3292
B3	A1&!A2&A3&!B1&!B2	0.0100	ZN(HL)	0.0010	0.3295
B3	A1&A2&!A3&!B1&!B2	0.0100	ZN(HL)	0.0010	0.3291
B3	A1&A2&A3&!B1&!B2	0.0100	ZN(HL)	0.0010	0.3291
A3	!A1&!A2&!B1&!B2&B3	0.0100	ZN(LH)	0.0010	1.6811
A3	!A1&!A2&!B1&B2&!B3	0.0100	ZN(LH)	0.0010	1.5070
A3	!A1&!A2&!B1&B2&B3	0.0100	ZN(LH)	0.0010	1.5037
A3	!A1&!A2&B1&!B2&!B3	0.0100	ZN(LH)	0.0010	1.2639
A3	!A1&!A2&B1&!B2&B3	0.0100	ZN(LH)	0.0010	1.2606
A3	!A1&!A2&B1&B2&!B3	0.0100	ZN(LH)	0.0010	1.2605
A3	!A1&!A2&B1&B2&B3	0.0100	ZN(LH)	0.0010	1.2588
A3	!A1&!A2&!B1&!B2&B3	0.0100	ZN(HL)	0.0010	0.6441

continues on next page

Table 266 – continued from previous page

A3	!A1&!A2&!B1&B2&!B3	0.0100	ZN(HL)	0.0010	0.4959
A3	!A1&!A2&!B1&B2&B3	0.0100	ZN(HL)	0.0010	0.4965
A3	!A1&!A2&B1&!B2&!B3	0.0100	ZN(HL)	0.0010	0.3264
A3	!A1&!A2&B1&!B2&B3	0.0100	ZN(HL)	0.0010	0.3267
A3	!A1&!A2&B1&B2&!B3	0.0100	ZN(HL)	0.0010	0.3267
A3	!A1&!A2&B1&B2&B3	0.0100	ZN(HL)	0.0010	0.3266
A1	!A2&!A3&!B1&!B2&B3	0.0100	ZN(HL)	0.0010	0.3508
A1	!A2&!A3&!B1&B2&!B3	0.0100	ZN(HL)	0.0010	0.2024
A1	!A2&!A3&!B1&B2&B3	0.0100	ZN(HL)	0.0010	0.2028
A1	!A2&!A3&B1&!B2&!B3	0.0100	ZN(HL)	0.0010	0.0287
A1	!A2&!A3&B1&!B2&B3	0.0100	ZN(HL)	0.0010	0.0288
A1	!A2&!A3&B1&B2&!B3	0.0100	ZN(HL)	0.0010	0.0288
A1	!A2&!A3&B1&B2&B3	0.0100	ZN(HL)	0.0010	0.0290
B2	!A1&!A2&A3&!B1&!B3	0.0100	ZN(HL)	0.0010	0.5117
B2	!A1&A2&!A3&!B1&!B3	0.0100	ZN(HL)	0.0010	0.3641
B2	!A1&A2&A3&!B1&!B3	0.0100	ZN(HL)	0.0010	0.3634
B2	A1&!A2&!A3&!B1&!B3	0.0100	ZN(HL)	0.0010	0.1977
B2	A1&!A2&A3&!B1&!B3	0.0100	ZN(HL)	0.0010	0.1978
B2	A1&A2&!A3&!B1&!B3	0.0100	ZN(HL)	0.0010	0.1978
B2	A1&A2&A3&!B1&!B3	0.0100	ZN(HL)	0.0010	0.1979
B2(LH)	!A1&!A2&!A3&!B1&!B3	0.0100	n/a	n/a	-0.2387
B2(LH)	!A1&!A2&!A3&!B1&B3	0.0100	n/a	n/a	-0.2319
B2(LH)	!A1&!A2&!A3&B1&!B3	0.0100	n/a	n/a	-0.2235
B2(LH)	!A1&!A2&!A3&B1&B3	0.0100	n/a	n/a	-0.2149
B2(LH)	!A1&!A2&A3&!B1&B3	0.0100	n/a	n/a	-0.0736
B2(LH)	!A1&!A2&A3&B1&!B3	0.0100	n/a	n/a	-0.1878
B2(LH)	!A1&!A2&A3&B1&B3	0.0100	n/a	n/a	-0.1647
B2(LH)	!A1&A2&!A3&!B1&B3	0.0100	n/a	n/a	-0.0736
B2(LH)	!A1&A2&!A3&B1&!B3	0.0100	n/a	n/a	-0.1878
B2(LH)	!A1&A2&!A3&B1&B3	0.0100	n/a	n/a	-0.1647
B2(LH)	!A1&A2&A3&!B1&B3	0.0100	n/a	n/a	-0.0736
B2(LH)	!A1&A2&A3&B1&!B3	0.0100	n/a	n/a	-0.1878
B2(LH)	!A1&A2&A3&B1&B3	0.0100	n/a	n/a	-0.1647
B2(LH)	A1&!A2&!A3&!B1&B3	0.0100	n/a	n/a	-0.0736
B2(LH)	A1&!A2&!A3&B1&!B3	0.0100	n/a	n/a	-0.1878
B2(LH)	A1&!A2&!A3&B1&B3	0.0100	n/a	n/a	-0.1647
B2(LH)	A1&!A2&A3&!B1&B3	0.0100	n/a	n/a	-0.0736
B2(LH)	A1&!A2&A3&B1&!B3	0.0100	n/a	n/a	-0.1878
B2(LH)	A1&!A2&A3&B1&B3	0.0100	n/a	n/a	-0.1647
B2(LH)	A1&A2&!A3&!B1&B3	0.0100	n/a	n/a	-0.0736
B2(LH)	A1&A2&!A3&B1&!B3	0.0100	n/a	n/a	-0.1878
B2(LH)	A1&A2&!A3&B1&B3	0.0100	n/a	n/a	-0.1647
B2(LH)	A1&A2&A3&!B1&B3	0.0100	n/a	n/a	-0.0736
B2(LH)	A1&A2&A3&B1&!B3	0.0100	n/a	n/a	-0.1878
B2(LH)	A1&A2&A3&B1&B3	0.0100	n/a	n/a	-0.1647
A3(LH)	!A1&!A2&!B1&!B2&!B3	0.0100	n/a	n/a	0.2866
A3(LH)	!A1&A2&!B1&!B2&!B3	0.0100	n/a	n/a	-0.2601
A3(LH)	A1&!A2&!B1&!B2&!B3	0.0100	n/a	n/a	-0.2298
A3(LH)	A1&A2&!B1&!B2&!B3	0.0100	n/a	n/a	-0.2519
A3(LH)	!A1&A2&!B1&!B2&B3	0.0100	n/a	n/a	-0.2077
A3(LH)	!A1&A2&!B1&B2&!B3	0.0100	n/a	n/a	-0.2077
A3(LH)	!A1&A2&!B1&B2&B3	0.0100	n/a	n/a	-0.2076

continues on next page

Table 266 – continued from previous page

A3(LH)	!A1&A2&B1&!B2&!B3	0.0100	n/a	n/a	-0.2077
A3(LH)	!A1&A2&B1&!B2&B3	0.0100	n/a	n/a	-0.2076
A3(LH)	!A1&A2&B1&B2&!B3	0.0100	n/a	n/a	-0.2076
A3(LH)	!A1&A2&B1&B2&B3	0.0100	n/a	n/a	-0.2076
A3(LH)	A1&!A2&!B1&!B2&B3	0.0100	n/a	n/a	-0.1965
A3(LH)	A1&!A2&!B1&B2&!B3	0.0100	n/a	n/a	-0.1965
A3(LH)	A1&!A2&!B1&B2&B3	0.0100	n/a	n/a	-0.1965
A3(LH)	A1&!A2&B1&!B2&!B3	0.0100	n/a	n/a	-0.1965
A3(LH)	A1&!A2&B1&!B2&B3	0.0100	n/a	n/a	-0.1965
A3(LH)	A1&!A2&B1&B2&!B3	0.0100	n/a	n/a	-0.1965
A3(LH)	A1&!A2&B1&B2&B3	0.0100	n/a	n/a	-0.1965
A3(LH)	A1&A2&!B1&!B2&B3	0.0100	n/a	n/a	-0.2227
A3(LH)	A1&A2&!B1&B2&!B3	0.0100	n/a	n/a	-0.2227
A3(LH)	A1&A2&!B1&B2&B3	0.0100	n/a	n/a	-0.2226
A3(LH)	A1&A2&B1&!B2&!B3	0.0100	n/a	n/a	-0.2227
A3(LH)	A1&A2&B1&!B2&B3	0.0100	n/a	n/a	-0.2226
A3(LH)	A1&A2&B1&B2&!B3	0.0100	n/a	n/a	-0.2226
A3(LH)	A1&A2&B1&B2&B3	0.0100	n/a	n/a	-0.2226
A3(HL)	!A1&!A2&!B1&!B2&!B3	0.0100	n/a	n/a	0.2676
A3(HL)	!A1&A2&!B1&!B2&!B3	0.0100	n/a	n/a	0.2702
A3(HL)	A1&!A2&!B1&!B2&!B3	0.0100	n/a	n/a	0.2725
A3(HL)	A1&A2&!B1&!B2&!B3	0.0100	n/a	n/a	0.2706
A3(HL)	!A1&A2&!B1&!B2&B3	0.0100	n/a	n/a	0.2385
A3(HL)	!A1&A2&!B1&B2&!B3	0.0100	n/a	n/a	0.2385
A3(HL)	!A1&A2&!B1&B2&B3	0.0100	n/a	n/a	0.2384
A3(HL)	!A1&A2&B1&!B2&!B3	0.0100	n/a	n/a	0.2384
A3(HL)	!A1&A2&B1&!B2&B3	0.0100	n/a	n/a	0.2384
A3(HL)	!A1&A2&B1&B2&!B3	0.0100	n/a	n/a	0.2384
A3(HL)	!A1&A2&B1&B2&B3	0.0100	n/a	n/a	0.2384
A3(HL)	A1&!A2&!B1&!B2&B3	0.0100	n/a	n/a	0.2409
A3(HL)	A1&!A2&!B1&B2&!B3	0.0100	n/a	n/a	0.2409
A3(HL)	A1&!A2&!B1&B2&B3	0.0100	n/a	n/a	0.2409
A3(HL)	A1&!A2&B1&!B2&!B3	0.0100	n/a	n/a	0.2409
A3(HL)	A1&!A2&B1&!B2&B3	0.0100	n/a	n/a	0.2409
A3(HL)	A1&!A2&B1&B2&!B3	0.0100	n/a	n/a	0.2409
A3(HL)	A1&!A2&B1&B2&B3	0.0100	n/a	n/a	0.2409
A3(HL)	A1&A2&!B1&!B2&B3	0.0100	n/a	n/a	0.2384
A3(HL)	A1&A2&!B1&B2&!B3	0.0100	n/a	n/a	0.2384
A3(HL)	A1&A2&!B1&B2&B3	0.0100	n/a	n/a	0.2384
A3(HL)	A1&A2&B1&!B2&!B3	0.0100	n/a	n/a	0.2384
A3(HL)	A1&A2&B1&!B2&B3	0.0100	n/a	n/a	0.2384
A3(HL)	A1&A2&B1&B2&!B3	0.0100	n/a	n/a	0.2384
A3(HL)	A1&A2&B1&B2&B3	0.0100	n/a	n/a	0.2384
B2(HL)	!A1&!A2&!A3&!B1&!B3	0.0100	n/a	n/a	0.2583
B2(HL)	!A1&!A2&!A3&!B1&B3	0.0100	n/a	n/a	0.2382
B2(HL)	!A1&!A2&!A3&B1&!B3	0.0100	n/a	n/a	0.2379
B2(HL)	!A1&!A2&!A3&B1&B3	0.0100	n/a	n/a	0.1335
B2(HL)	!A1&!A2&A3&!B1&B3	0.0100	n/a	n/a	0.1515
B2(HL)	!A1&!A2&A3&B1&!B3	0.0100	n/a	n/a	0.2379
B2(HL)	!A1&!A2&A3&B1&B3	0.0100	n/a	n/a	0.1335
B2(HL)	!A1&A2&!A3&!B1&B3	0.0100	n/a	n/a	0.1515
B2(HL)	!A1&A2&!A3&B1&!B3	0.0100	n/a	n/a	0.2379

continues on next page

Table 266 – continued from previous page

B2(HL)	!A1&A2&!A3&B1&B3	0.0100	n/a	n/a	0.1335
B2(HL)	!A1&A2&A3&!B1&B3	0.0100	n/a	n/a	0.1515
B2(HL)	!A1&A2&A3&B1&!B3	0.0100	n/a	n/a	0.2379
B2(HL)	!A1&A2&A3&B1&B3	0.0100	n/a	n/a	0.1334
B2(HL)	A1&!A2&!A3&!B1&B3	0.0100	n/a	n/a	0.1516
B2(HL)	A1&!A2&!A3&B1&!B3	0.0100	n/a	n/a	0.2379
B2(HL)	A1&!A2&!A3&B1&B3	0.0100	n/a	n/a	0.1335
B2(HL)	A1&!A2&A3&!B1&B3	0.0100	n/a	n/a	0.1515
B2(HL)	A1&!A2&A3&B1&!B3	0.0100	n/a	n/a	0.2379
B2(HL)	A1&!A2&A3&B1&B3	0.0100	n/a	n/a	0.1334
B2(HL)	A1&A2&!A3&!B1&B3	0.0100	n/a	n/a	0.1515
B2(HL)	A1&A2&!A3&B1&!B3	0.0100	n/a	n/a	0.2379
B2(HL)	A1&A2&!A3&B1&B3	0.0100	n/a	n/a	0.1334
B2(HL)	A1&A2&A3&!B1&B3	0.0100	n/a	n/a	0.1515
B2(HL)	A1&A2&A3&B1&!B3	0.0100	n/a	n/a	0.2379
B2(HL)	A1&A2&A3&B1&B3	0.0100	n/a	n/a	0.1334
B3(LH)	!A1&!A2&!A3&!B1&!B2	0.0100	n/a	n/a	-0.2377
B3(LH)	!A1&!A2&!A3&!B1&B2	0.0100	n/a	n/a	-0.2309
B3(LH)	!A1&!A2&!A3&B1&!B2	0.0100	n/a	n/a	-0.1998
B3(LH)	!A1&!A2&!A3&B1&B2	0.0100	n/a	n/a	-0.2228
B3(LH)	!A1&!A2&A3&!B1&B2	0.0100	n/a	n/a	-0.2080
B3(LH)	!A1&!A2&A3&B1&!B2	0.0100	n/a	n/a	-0.1964
B3(LH)	!A1&!A2&A3&B1&B2	0.0100	n/a	n/a	-0.2228
B3(LH)	!A1&A2&!A3&!B1&B2	0.0100	n/a	n/a	-0.2080
B3(LH)	!A1&A2&!A3&B1&!B2	0.0100	n/a	n/a	-0.1964
B3(LH)	!A1&A2&!A3&B1&B2	0.0100	n/a	n/a	-0.2228
B3(LH)	!A1&A2&A3&!B1&B2	0.0100	n/a	n/a	-0.2079
B3(LH)	!A1&A2&A3&B1&!B2	0.0100	n/a	n/a	-0.1964
B3(LH)	!A1&A2&A3&B1&B2	0.0100	n/a	n/a	-0.2227
B3(LH)	A1&!A2&!A3&!B1&B2	0.0100	n/a	n/a	-0.2080
B3(LH)	A1&!A2&!A3&B1&!B2	0.0100	n/a	n/a	-0.1964
B3(LH)	A1&!A2&!A3&B1&B2	0.0100	n/a	n/a	-0.2228
B3(LH)	A1&!A2&A3&!B1&B2	0.0100	n/a	n/a	-0.2079
B3(LH)	A1&!A2&A3&B1&!B2	0.0100	n/a	n/a	-0.1964
B3(LH)	A1&!A2&A3&B1&B2	0.0100	n/a	n/a	-0.2227
B3(LH)	A1&A2&!A3&!B1&B2	0.0100	n/a	n/a	-0.2080
B3(LH)	A1&A2&!A3&B1&!B2	0.0100	n/a	n/a	-0.1964
B3(LH)	A1&A2&!A3&B1&B2	0.0100	n/a	n/a	-0.2228
B3(LH)	A1&A2&A3&!B1&B2	0.0100	n/a	n/a	-0.2079
B3(LH)	A1&A2&A3&B1&!B2	0.0100	n/a	n/a	-0.1964
B3(LH)	A1&A2&A3&B1&B2	0.0100	n/a	n/a	-0.2227
B3(HL)	!A1&!A2&!A3&!B1&!B2	0.0100	n/a	n/a	0.2580
B3(HL)	!A1&!A2&!A3&!B1&B2	0.0100	n/a	n/a	0.2384
B3(HL)	!A1&!A2&!A3&B1&!B2	0.0100	n/a	n/a	0.2377
B3(HL)	!A1&!A2&!A3&B1&B2	0.0100	n/a	n/a	0.2388
B3(HL)	!A1&!A2&A3&!B1&B2	0.0100	n/a	n/a	0.2387
B3(HL)	!A1&!A2&A3&B1&!B2	0.0100	n/a	n/a	0.2376
B3(HL)	!A1&!A2&A3&B1&B2	0.0100	n/a	n/a	0.2384
B3(HL)	!A1&A2&!A3&!B1&B2	0.0100	n/a	n/a	0.2387
B3(HL)	!A1&A2&!A3&B1&!B2	0.0100	n/a	n/a	0.2376
B3(HL)	!A1&A2&!A3&B1&B2	0.0100	n/a	n/a	0.2384
B3(HL)	!A1&A2&A3&!B1&B2	0.0100	n/a	n/a	0.2384

continues on next page

Table 266 – continued from previous page

B3(HL)	!A1&A2&A3&B1&!B2	0.0100	n/a	n/a	0.2376
B3(HL)	!A1&A2&A3&B1&B2	0.0100	n/a	n/a	0.2384
B3(HL)	A1&!A2&!A3&!B1&B2	0.0100	n/a	n/a	0.2387
B3(HL)	A1&!A2&!A3&B1&!B2	0.0100	n/a	n/a	0.2376
B3(HL)	A1&!A2&!A3&B1&B2	0.0100	n/a	n/a	0.2384
B3(HL)	A1&!A2&A3&!B1&B2	0.0100	n/a	n/a	0.2384
B3(HL)	A1&!A2&A3&B1&!B2	0.0100	n/a	n/a	0.2376
B3(HL)	A1&!A2&A3&B1&B2	0.0100	n/a	n/a	0.2384
B3(HL)	A1&A2&!A3&!B1&B2	0.0100	n/a	n/a	0.2384
B3(HL)	A1&A2&!A3&B1&!B2	0.0100	n/a	n/a	0.2376
B3(HL)	A1&A2&!A3&B1&B2	0.0100	n/a	n/a	0.2384
B3(HL)	A1&A2&A3&!B1&B2	0.0100	n/a	n/a	0.2384
B3(HL)	A1&A2&A3&B1&!B2	0.0100	n/a	n/a	0.2376
B3(HL)	A1&A2&A3&B1&B2	0.0100	n/a	n/a	0.2383
A2(LH)	!A1&!A3&!B1&!B2&!B3	0.0100	n/a	n/a	0.2857
A2(LH)	!A1&A3&!B1&!B2&!B3	0.0100	n/a	n/a	-0.2607
A2(LH)	A1&!A3&!B1&!B2&!B3	0.0100	n/a	n/a	-0.2537
A2(LH)	A1&A3&!B1&!B2&!B3	0.0100	n/a	n/a	-0.2419
A2(LH)	!A1&A3&!B1&!B2&B3	0.0100	n/a	n/a	-0.0732
A2(LH)	!A1&A3&!B1&B2&!B3	0.0100	n/a	n/a	-0.0732
A2(LH)	!A1&A3&!B1&B2&B3	0.0100	n/a	n/a	-0.0732
A2(LH)	!A1&A3&B1&!B2&!B3	0.0100	n/a	n/a	-0.0732
A2(LH)	!A1&A3&B1&!B2&B3	0.0100	n/a	n/a	-0.0732
A2(LH)	!A1&A3&B1&B2&!B3	0.0100	n/a	n/a	-0.0732
A2(LH)	!A1&A3&B1&B2&B3	0.0100	n/a	n/a	-0.0733
A2(LH)	A1&!A3&!B1&!B2&B3	0.0100	n/a	n/a	-0.1893
A2(LH)	A1&!A3&!B1&B2&!B3	0.0100	n/a	n/a	-0.1893
A2(LH)	A1&!A3&!B1&B2&B3	0.0100	n/a	n/a	-0.1892
A2(LH)	A1&!A3&B1&!B2&!B3	0.0100	n/a	n/a	-0.1893
A2(LH)	A1&!A3&B1&!B2&B3	0.0100	n/a	n/a	-0.1892
A2(LH)	A1&!A3&B1&B2&!B3	0.0100	n/a	n/a	-0.1892
A2(LH)	A1&!A3&B1&B2&B3	0.0100	n/a	n/a	-0.1895
A2(LH)	A1&A3&!B1&!B2&B3	0.0100	n/a	n/a	-0.1635
A2(LH)	A1&A3&!B1&B2&!B3	0.0100	n/a	n/a	-0.1635
A2(LH)	A1&A3&!B1&B2&B3	0.0100	n/a	n/a	-0.1637
A2(LH)	A1&A3&B1&!B2&!B3	0.0100	n/a	n/a	-0.1635
A2(LH)	A1&A3&B1&!B2&B3	0.0100	n/a	n/a	-0.1637
A2(LH)	A1&A3&B1&B2&!B3	0.0100	n/a	n/a	-0.1637
A2(LH)	A1&A3&B1&B2&B3	0.0100	n/a	n/a	-0.1636
A1(LH)	!A2&!A3&!B1&!B2&!B3	0.0100	n/a	n/a	0.2850
A1(LH)	!A2&A3&!B1&!B2&!B3	0.0100	n/a	n/a	-0.2301
A1(LH)	A2&!A3&!B1&!B2&!B3	0.0100	n/a	n/a	-0.2547
A1(LH)	A2&A3&!B1&!B2&!B3	0.0100	n/a	n/a	-0.2491
A1(LH)	!A2&A3&!B1&!B2&B3	0.0100	n/a	n/a	-0.0638
A1(LH)	!A2&A3&!B1&B2&!B3	0.0100	n/a	n/a	-0.0638
A1(LH)	!A2&A3&!B1&B2&B3	0.0100	n/a	n/a	-0.0638
A1(LH)	!A2&A3&B1&!B2&!B3	0.0100	n/a	n/a	-0.0638
A1(LH)	!A2&A3&B1&!B2&B3	0.0100	n/a	n/a	-0.0638
A1(LH)	!A2&A3&B1&B2&!B3	0.0100	n/a	n/a	-0.0638
A1(LH)	!A2&A3&B1&B2&B3	0.0100	n/a	n/a	-0.0638
A1(LH)	A2&!A3&!B1&!B2&B3	0.0100	n/a	n/a	-0.0632
A1(LH)	A2&!A3&!B1&B2&!B3	0.0100	n/a	n/a	-0.0632

continues on next page

Table 266 – continued from previous page

A1(LH)	A2&!A3&!B1&B2&B3	0.0100	n/a	n/a	-0.0631
A1(LH)	A2&!A3&B1&!B2&!B3	0.0100	n/a	n/a	-0.0632
A1(LH)	A2&!A3&B1&!B2&B3	0.0100	n/a	n/a	-0.0631
A1(LH)	A2&!A3&B1&B2&!B3	0.0100	n/a	n/a	-0.0631
A1(LH)	A2&!A3&B1&B2&B3	0.0100	n/a	n/a	-0.0631
A1(LH)	A2&A3&!B1&!B2&B3	0.0100	n/a	n/a	-0.0632
A1(LH)	A2&A3&!B1&B2&!B3	0.0100	n/a	n/a	-0.0631
A1(LH)	A2&A3&!B1&B2&B3	0.0100	n/a	n/a	-0.0631
A1(LH)	A2&A3&B1&!B2&!B3	0.0100	n/a	n/a	-0.0631
A1(LH)	A2&A3&B1&!B2&B3	0.0100	n/a	n/a	-0.0631
A1(LH)	A2&A3&B1&B2&!B3	0.0100	n/a	n/a	-0.0631
A1(LH)	A2&A3&B1&B2&B3	0.0100	n/a	n/a	-0.0631
A2(HL)	!A1&!A3&!B1&!B2&!B3	0.0100	n/a	n/a	0.2680
A2(HL)	!A1&A3&!B1&!B2&!B3	0.0100	n/a	n/a	0.2696
A2(HL)	A1&!A3&!B1&!B2&!B3	0.0100	n/a	n/a	0.2723
A2(HL)	A1&A3&!B1&!B2&!B3	0.0100	n/a	n/a	0.1658
A2(HL)	!A1&A3&!B1&!B2&B3	0.0100	n/a	n/a	0.1517
A2(HL)	!A1&A3&!B1&B2&!B3	0.0100	n/a	n/a	0.1517
A2(HL)	!A1&A3&!B1&B2&B3	0.0100	n/a	n/a	0.1517
A2(HL)	!A1&A3&B1&!B2&!B3	0.0100	n/a	n/a	0.1517
A2(HL)	!A1&A3&B1&!B2&B3	0.0100	n/a	n/a	0.1517
A2(HL)	!A1&A3&B1&B2&!B3	0.0100	n/a	n/a	0.1517
A2(HL)	!A1&A3&B1&B2&B3	0.0100	n/a	n/a	0.1516
A2(HL)	A1&!A3&!B1&!B2&B3	0.0100	n/a	n/a	0.2405
A2(HL)	A1&!A3&!B1&B2&!B3	0.0100	n/a	n/a	0.2405
A2(HL)	A1&!A3&!B1&B2&B3	0.0100	n/a	n/a	0.2405
A2(HL)	A1&!A3&B1&!B2&!B3	0.0100	n/a	n/a	0.2405
A2(HL)	A1&!A3&B1&!B2&B3	0.0100	n/a	n/a	0.2405
A2(HL)	A1&!A3&B1&B2&!B3	0.0100	n/a	n/a	0.2405
A2(HL)	A1&!A3&B1&B2&B3	0.0100	n/a	n/a	0.2407
A2(HL)	A1&A3&!B1&!B2&B3	0.0100	n/a	n/a	0.1331
A2(HL)	A1&A3&!B1&B2&!B3	0.0100	n/a	n/a	0.1331
A2(HL)	A1&A3&!B1&B2&B3	0.0100	n/a	n/a	0.1331
A2(HL)	A1&A3&B1&!B2&!B3	0.0100	n/a	n/a	0.1331
A2(HL)	A1&A3&B1&!B2&B3	0.0100	n/a	n/a	0.1331
A2(HL)	A1&A3&B1&B2&!B3	0.0100	n/a	n/a	0.1331
A2(HL)	A1&A3&B1&B2&B3	0.0100	n/a	n/a	0.1332
B1(HL)	!A1&!A2&!A3&!B2&!B3	0.0100	n/a	n/a	0.2590
B1(HL)	!A1&!A2&!A3&!B2&B3	0.0100	n/a	n/a	0.2383
B1(HL)	!A1&!A2&!A3&B2&!B3	0.0100	n/a	n/a	0.2384
B1(HL)	!A1&!A2&!A3&B2&B3	0.0100	n/a	n/a	0.2384
B1(HL)	!A1&!A2&A3&!B2&B3	0.0100	n/a	n/a	0.3309
B1(HL)	!A1&!A2&A3&B2&!B3	0.0100	n/a	n/a	0.1821
B1(HL)	!A1&!A2&A3&B2&B3	0.0100	n/a	n/a	0.1820
B1(HL)	!A1&A2&!A3&!B2&B3	0.0100	n/a	n/a	0.3309
B1(HL)	!A1&A2&!A3&B2&!B3	0.0100	n/a	n/a	0.1821
B1(HL)	!A1&A2&!A3&B2&B3	0.0100	n/a	n/a	0.1820
B1(HL)	!A1&A2&A3&!B2&B3	0.0100	n/a	n/a	0.3310
B1(HL)	!A1&A2&A3&B2&!B3	0.0100	n/a	n/a	0.1821
B1(HL)	!A1&A2&A3&B2&B3	0.0100	n/a	n/a	0.1821
B1(HL)	A1&!A2&!A3&!B2&B3	0.0100	n/a	n/a	0.3309
B1(HL)	A1&!A2&!A3&B2&!B3	0.0100	n/a	n/a	0.1821

continues on next page

Table 266 – continued from previous page

B1(HL)	A1&!A2&!A3&B2&B3	0.0100	n/a	n/a	0.1820
B1(HL)	A1&!A2&A3&!B2&B3	0.0100	n/a	n/a	0.3310
B1(HL)	A1&!A2&A3&B2&!B3	0.0100	n/a	n/a	0.1821
B1(HL)	A1&!A2&A3&B2&B3	0.0100	n/a	n/a	0.1821
B1(HL)	A1&A2&!A3&!B2&B3	0.0100	n/a	n/a	0.3310
B1(HL)	A1&A2&!A3&B2&!B3	0.0100	n/a	n/a	0.1821
B1(HL)	A1&A2&!A3&B2&B3	0.0100	n/a	n/a	0.1821
B1(HL)	A1&A2&A3&!B2&B3	0.0100	n/a	n/a	0.3309
B1(HL)	A1&A2&A3&B2&!B3	0.0100	n/a	n/a	0.1821
B1(HL)	A1&A2&A3&B2&B3	0.0100	n/a	n/a	0.1821
A1(HL)	!A2&!A3&!B1&!B2&!B3	0.0100	n/a	n/a	0.2684
A1(HL)	!A2&A3&!B1&!B2&!B3	0.0100	n/a	n/a	0.2731
A1(HL)	A2&!A3&!B1&!B2&!B3	0.0100	n/a	n/a	0.2724
A1(HL)	A2&A3&!B1&!B2&!B3	0.0100	n/a	n/a	0.2728
A1(HL)	!A2&A3&!B1&!B2&B3	0.0100	n/a	n/a	0.3227
A1(HL)	!A2&A3&!B1&B2&!B3	0.0100	n/a	n/a	0.3227
A1(HL)	!A2&A3&!B1&B2&B3	0.0100	n/a	n/a	0.3225
A1(HL)	!A2&A3&B1&!B2&!B3	0.0100	n/a	n/a	0.3227
A1(HL)	!A2&A3&B1&!B2&B3	0.0100	n/a	n/a	0.3225
A1(HL)	!A2&A3&B1&B2&!B3	0.0100	n/a	n/a	0.3225
A1(HL)	!A2&A3&B1&B2&B3	0.0100	n/a	n/a	0.3225
A1(HL)	A2&!A3&!B1&!B2&B3	0.0100	n/a	n/a	0.1743
A1(HL)	A2&!A3&!B1&B2&!B3	0.0100	n/a	n/a	0.1743
A1(HL)	A2&!A3&!B1&B2&B3	0.0100	n/a	n/a	0.1742
A1(HL)	A2&!A3&B1&!B2&!B3	0.0100	n/a	n/a	0.1743
A1(HL)	A2&!A3&B1&!B2&B3	0.0100	n/a	n/a	0.1742
A1(HL)	A2&!A3&B1&B2&!B3	0.0100	n/a	n/a	0.1742
A1(HL)	A2&!A3&B1&B2&B3	0.0100	n/a	n/a	0.1742
A1(HL)	A2&A3&!B1&!B2&B3	0.0100	n/a	n/a	0.1743
A1(HL)	A2&A3&!B1&B2&!B3	0.0100	n/a	n/a	0.1743
A1(HL)	A2&A3&!B1&B2&B3	0.0100	n/a	n/a	0.1744
A1(HL)	A2&A3&B1&!B2&!B3	0.0100	n/a	n/a	0.1743
A1(HL)	A2&A3&B1&!B2&B3	0.0100	n/a	n/a	0.1744
A1(HL)	A2&A3&B1&B2&!B3	0.0100	n/a	n/a	0.1744
A1(HL)	A2&A3&B1&B2&B3	0.0100	n/a	n/a	0.1743
B1(LH)	!A1&!A2&!A3&!B2&!B3	0.0100	n/a	n/a	-0.2394
B1(LH)	!A1&!A2&!A3&!B2&B3	0.0100	n/a	n/a	-0.2006
B1(LH)	!A1&!A2&!A3&B2&!B3	0.0100	n/a	n/a	-0.2247
B1(LH)	!A1&!A2&!A3&B2&B3	0.0100	n/a	n/a	-0.2191
B1(LH)	!A1&!A2&A3&!B2&B3	0.0100	n/a	n/a	-0.0638
B1(LH)	!A1&!A2&A3&B2&!B3	0.0100	n/a	n/a	-0.0630
B1(LH)	!A1&!A2&A3&B2&B3	0.0100	n/a	n/a	-0.0630
B1(LH)	!A1&A2&!A3&!B2&B3	0.0100	n/a	n/a	-0.0638
B1(LH)	!A1&A2&!A3&B2&!B3	0.0100	n/a	n/a	-0.0630
B1(LH)	!A1&A2&!A3&B2&B3	0.0100	n/a	n/a	-0.0630
B1(LH)	!A1&A2&A3&!B2&B3	0.0100	n/a	n/a	-0.0637
B1(LH)	!A1&A2&A3&B2&!B3	0.0100	n/a	n/a	-0.0630
B1(LH)	!A1&A2&A3&B2&B3	0.0100	n/a	n/a	-0.0630
B1(LH)	A1&!A2&!A3&!B2&B3	0.0100	n/a	n/a	-0.0638
B1(LH)	A1&!A2&!A3&B2&!B3	0.0100	n/a	n/a	-0.0630
B1(LH)	A1&!A2&!A3&B2&B3	0.0100	n/a	n/a	-0.0630
B1(LH)	A1&!A2&A3&!B2&B3	0.0100	n/a	n/a	-0.0637

continues on next page

Table 266 – continued from previous page

B1(LH)	A1&!A2&A3&B2&!B3	0.0100	n/a	n/a	-0.0630
B1(LH)	A1&!A2&A3&B2&B3	0.0100	n/a	n/a	-0.0630
B1(LH)	A1&A2&!A3&!B2&B3	0.0100	n/a	n/a	-0.0637
B1(LH)	A1&A2&!A3&B2&!B3	0.0100	n/a	n/a	-0.0630
B1(LH)	A1&A2&!A3&B2&B3	0.0100	n/a	n/a	-0.0630
B1(LH)	A1&A2&A3&!B2&B3	0.0100	n/a	n/a	-0.0637
B1(LH)	A1&A2&A3&B2&!B3	0.0100	n/a	n/a	-0.0630
B1(LH)	A1&A2&A3&B2&B3	0.0100	n/a	n/a	-0.0630

LEAKAGE POWER

When Condition	Power (nW)
!A1&!A2&!A3&!B1&!B2&!B3	0.3531
!A1&!A2&!A3&!B1&!B2&B3	0.3570
!A1&!A2&!A3&!B1&B2&!B3	0.3570
!A1&!A2&!A3&!B1&B2&B3	0.3570
!A1&!A2&!A3&B1&!B2&!B3	0.3570
!A1&!A2&!A3&B1&!B2&B3	0.3567
!A1&!A2&!A3&B1&B2&!B3	0.3567
!A1&!A2&!A3&B1&B2&B3	0.3567
!A1&!A2&A3&!B1&!B2&!B3	0.8285
!A1&A2&!A3&!B1&!B2&!B3	0.8285
!A1&A2&A3&!B1&!B2&!B3	0.8309
A1&!A2&!A3&!B1&!B2&!B3	0.8285
A1&!A2&A3&!B1&!B2&!B3	0.8318
A1&A2&!A3&!B1&!B2&!B3	0.8317
A1&A2&A3&!B1&!B2&!B3	0.8331
!A1&!A2&A3&!B1&!B2&B3	0.8305
!A1&!A2&A3&!B1&B2&!B3	0.6894
!A1&!A2&A3&!B1&B2&B3	0.6894
!A1&!A2&A3&B1&!B2&!B3	0.5475
!A1&!A2&A3&B1&!B2&B3	0.5472
!A1&!A2&A3&B1&B2&!B3	0.5472
!A1&!A2&A3&B1&B2&B3	0.5472
!A1&A2&!A3&!B1&!B2&B3	0.6894
!A1&A2&!A3&!B1&B2&!B3	0.5483
!A1&A2&!A3&!B1&B2&B3	0.5483
!A1&A2&!A3&B1&!B2&!B3	0.4064
!A1&A2&!A3&B1&!B2&B3	0.4061
!A1&A2&!A3&B1&B2&!B3	0.4061
!A1&A2&!A3&B1&B2&B3	0.4061
!A1&A2&A3&!B1&!B2&B3	0.6894
!A1&A2&A3&!B1&B2&!B3	0.5483
!A1&A2&A3&!B1&B2&B3	0.5483
!A1&A2&A3&B1&!B2&!B3	0.4064
!A1&A2&A3&B1&!B2&B3	0.4061
!A1&A2&A3&B1&B2&!B3	0.4061

continues on next page

Table 267 – continued from previous page

!A1&A2&A3&B1&B2&B3	0.4061
A1&!A2&!A3&!B1&!B2&B3	0.5478
A1&!A2&!A3&!B1&B2&!B3	0.4068
A1&!A2&!A3&!B1&B2&B3	0.4068
A1&!A2&!A3&B1&!B2&!B3	0.2649
A1&!A2&!A3&B1&!B2&B3	0.2645
A1&!A2&!A3&B1&B2&!B3	0.2646
A1&!A2&!A3&B1&B2&B3	0.2646
A1&!A2&A3&!B1&!B2&B3	0.5488
A1&!A2&A3&!B1&B2&!B3	0.4077
A1&!A2&A3&!B1&B2&B3	0.4077
A1&!A2&A3&B1&!B2&!B3	0.2658
A1&!A2&A3&B1&!B2&B3	0.2655
A1&!A2&A3&B1&B2&!B3	0.2655
A1&!A2&A3&B1&B2&B3	0.2655
A1&A2&!A3&!B1&!B2&B3	0.5487
A1&A2&!A3&!B1&B2&!B3	0.4076
A1&A2&!A3&!B1&B2&B3	0.4076
A1&A2&!A3&B1&!B2&!B3	0.2657
A1&A2&!A3&B1&!B2&B3	0.2654
A1&A2&!A3&B1&B2&!B3	0.2654
A1&A2&!A3&B1&B2&B3	0.2654
A1&A2&A3&!B1&!B2&B3	0.5487
A1&A2&A3&!B1&B2&!B3	0.4076
A1&A2&A3&!B1&B2&B3	0.4076
A1&A2&A3&B1&!B2&!B3	0.2657
A1&A2&A3&B1&!B2&B3	0.2654
A1&A2&A3&B1&B2&!B3	0.2654
A1&A2&A3&B1&B2&B3	0.2654

gf180mcu_fd_sc_mcu9t5v0__or2_1

gf180mcu_fd_sc_mcu9t5v0__or2_1 symbol

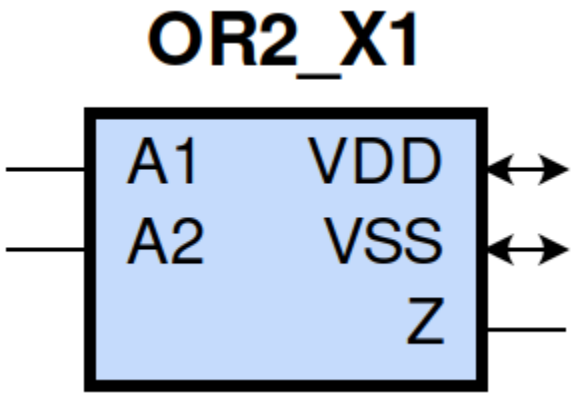

gf180mcu_fd_sc_mcu9t5v0__or2_1 schematic

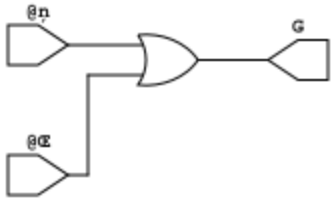

gf180mcu_fd_sc_mcu9t5v0__or2_1 layout

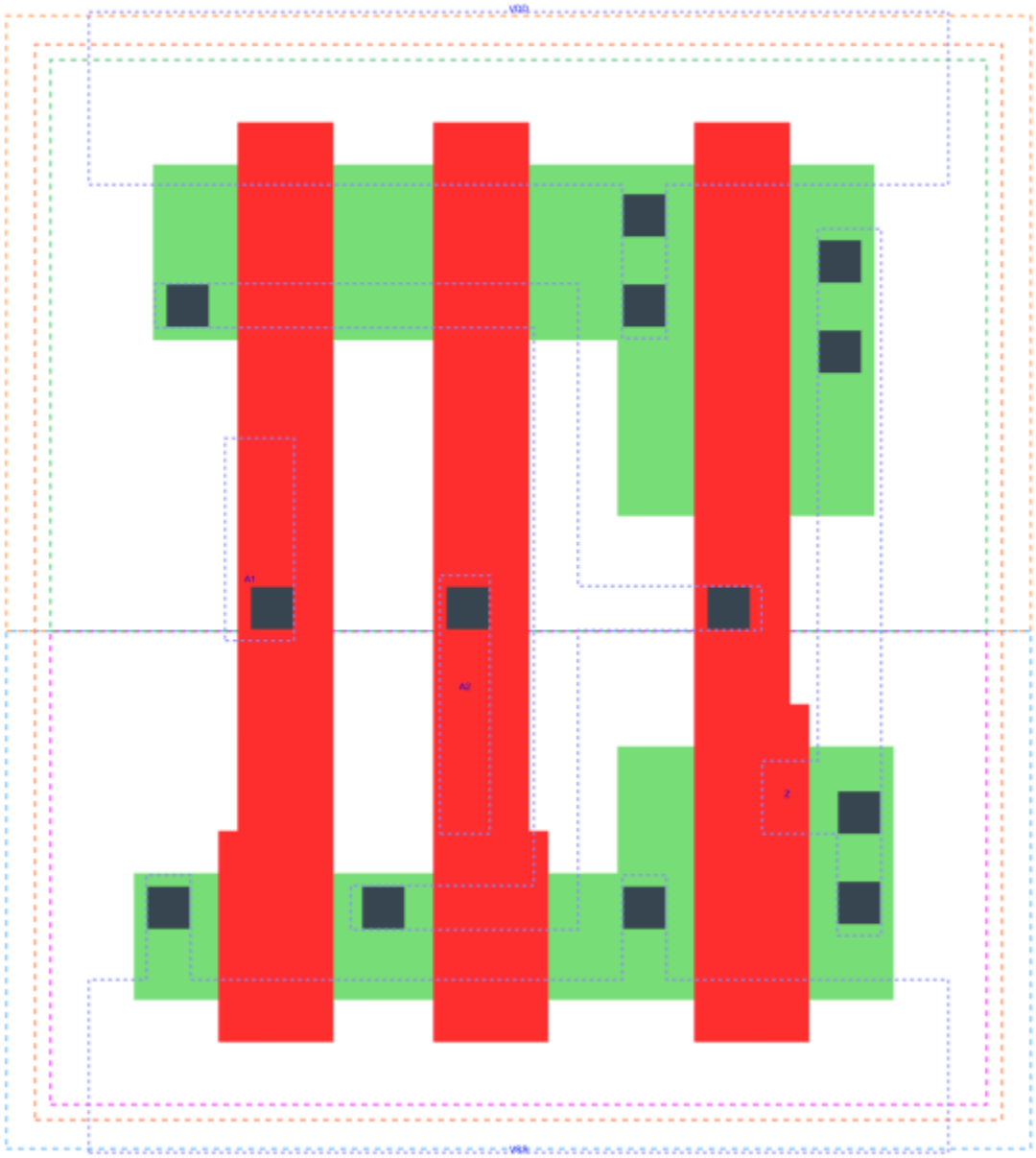

OR2_X1 is a 2-input OR with 1X drive strength

Attributes

Attribute	Value
area	22.579200 μm^2

OUTPUT FUNCTIONS

Output Pin	Function
Z	(A1|A2)

TRUTH TABLE FOR Z

A1	A2	Z
1	?	1
?	1	1
0	0	0

FUNCTIONAL SCHEMATIC

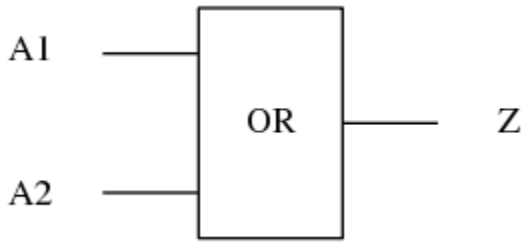

PIN CAPACITANCE (pf)

Pin	Type	Capacitance (pf)
A1	input	0.0040
A2	input	0.0041

DELAY AND OUTPUT TRANSITION TIME corresponding to min slew and load

Input Pin	Output	When Condition	Tin (ns)	Out Load (pf)	Delay (ns)	Tout (ns)
A1(LH)	Z(LH)	!A2	0.0100	0.0010	0.1434	0.0340
A1(HL)	Z(HL)	!A2	0.0100	0.0010	0.2666	0.0505
A2(HL)	Z(HL)	!A1	0.0100	0.0010	0.2917	0.0506
A2(LH)	Z(LH)	!A1	0.0100	0.0010	0.1594	0.0349

DYNAMIC ENERGY

Input Pin	When Condition	Tin (ns)	Output	Out Load (pf)	Energy (uW/MHz)
A2	!A1	0.0100	Z(HL)	0.0010	0.3400
A2	!A1	0.0100	Z(LH)	0.0010	0.1711
A1	!A2	0.0100	Z(LH)	0.0010	0.1512
A1	!A2	0.0100	Z(HL)	0.0010	0.3179
A2(LH)	A1	0.0100	n/a	n/a	-0.0245
A1(LH)	A2	0.0100	n/a	n/a	-0.0083
A1(HL)	A2	0.0100	n/a	n/a	0.0203
A2(HL)	A1	0.0100	n/a	n/a	0.0292

LEAKAGE POWER

When Condition	Power (nW)
!A1&!A2	0.1277
!A1&A2	0.1377
A1&!A2	0.1019
A1&A2	0.1019

gf180mcu_fd_sc_mcu9t5v0__or2_2

gf180mcu_fd_sc_mcu9t5v0__or2_2 symbol

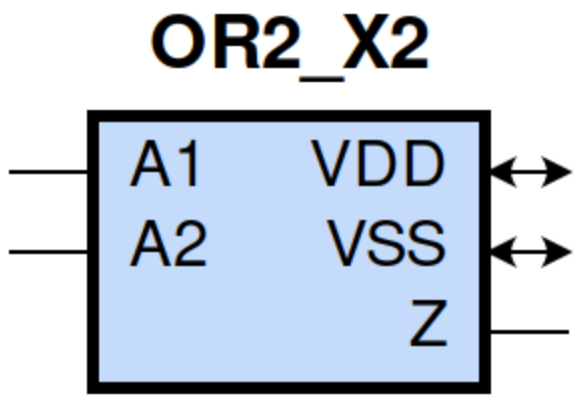

gf180mcu_fd_sc_mcu9t5v0__or2_2 schematic

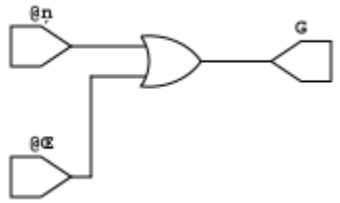

gf180mcu_fd_sc_mcu9t5v0__or2_2 layout

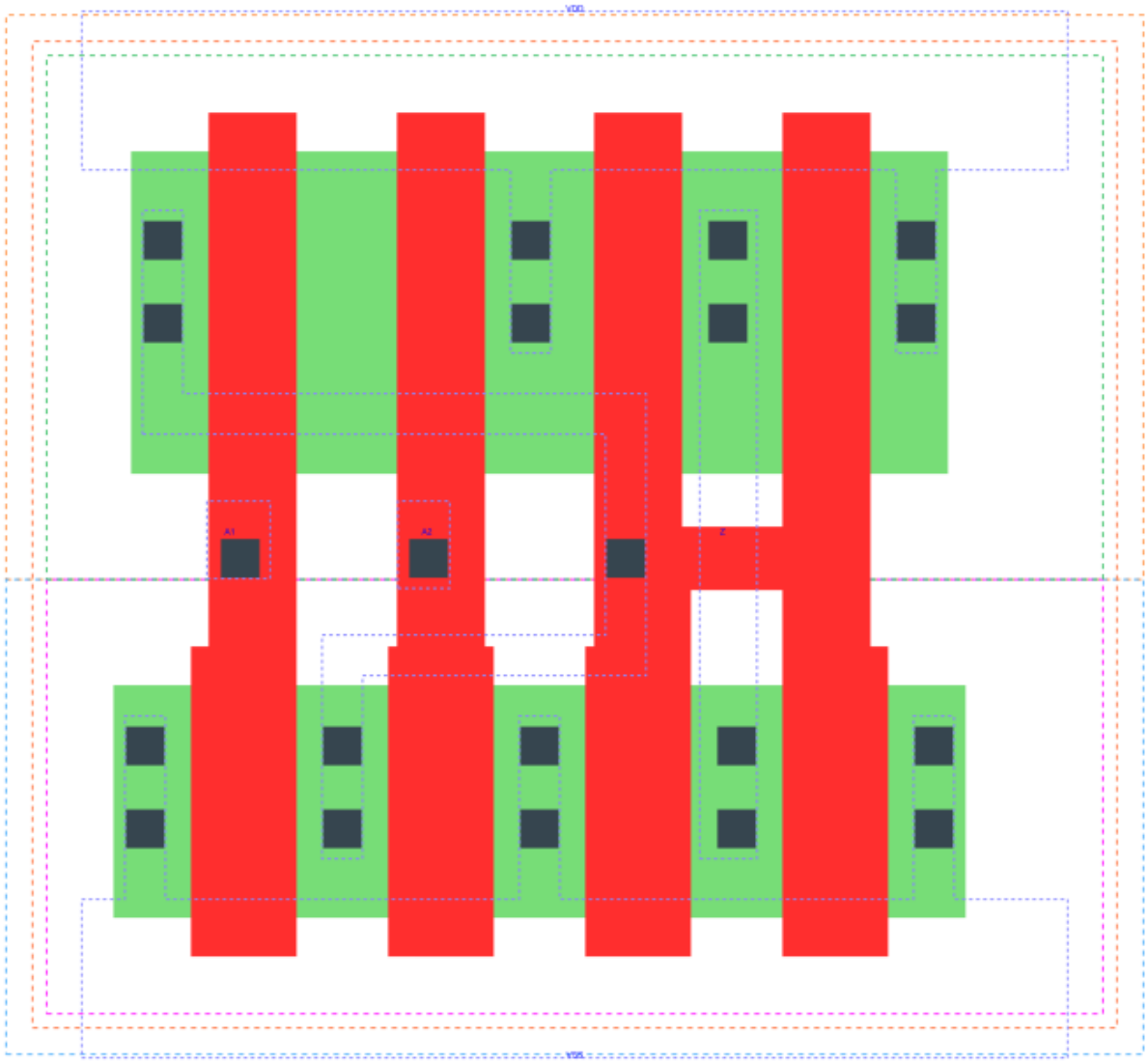

OR2_X2 is a 2-input OR with 2X drive strength

Attributes

Attribute	Value
area	28.224000 μm^2

OUTPUT FUNCTIONS

Output Pin	Function
Z	(A1|A2)

TRUTH TABLE FOR Z

A1	A2	Z
1	?	1
?	1	1
0	0	0

FUNCTIONAL SCHEMATIC

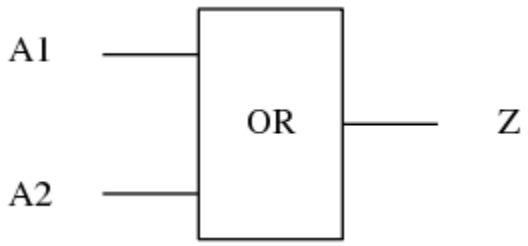

PIN CAPACITANCE (pf)

Pin	Type	Capacitance (pf)
A1	input	0.0068
A2	input	0.0067

DELAY AND OUTPUT TRANSITION TIME corresponding to min slew and load

Input Pin	Output	When Condition	Tin (ns)	Out Load (pf)	Delay (ns)	Tout (ns)
A1(LH)	Z(LH)	!A2	0.0100	0.0010	0.1258	0.0245
A1(HL)	Z(HL)	!A2	0.0100	0.0010	0.2296	0.0391
A2(HL)	Z(HL)	!A1	0.0100	0.0010	0.2539	0.0391
A2(LH)	Z(LH)	!A1	0.0100	0.0010	0.1426	0.0255

DYNAMIC ENERGY

Input Pin	When Condition	Tin (ns)	Output	Out Load (pf)	Energy (uW/MHz)
A2	!A1	0.0100	Z(HL)	0.0010	0.6127
A2	!A1	0.0100	Z(LH)	0.0010	0.2987
A1	!A2	0.0100	Z(LH)	0.0010	0.2581
A1	!A2	0.0100	Z(HL)	0.0010	0.5681
A2(LH)	A1	0.0100	n/a	n/a	-0.0496
A1(LH)	A2	0.0100	n/a	n/a	-0.0167
A1(HL)	A2	0.0100	n/a	n/a	0.0395
A2(HL)	A1	0.0100	n/a	n/a	0.0593

LEAKAGE POWER

When Condition	Power (nW)
!A1&!A2	0.1549
!A1&A2	0.1635
A1&!A2	0.1280
A1&A2	0.1280

gf180mcu_fd_sc_mcu9t5v0__or2_4

gf180mcu_fd_sc_mcu9t5v0__or2_4 symbol

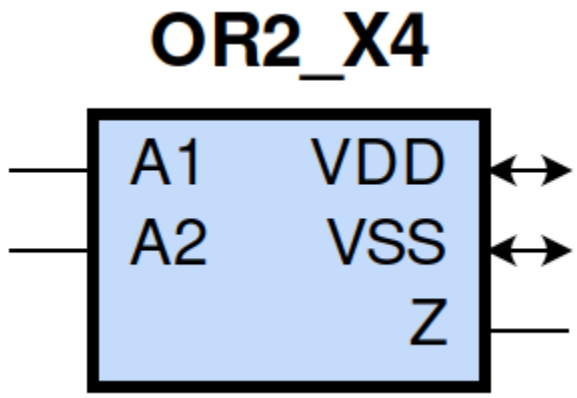

gf180mcu_fd_sc_mcu9t5v0__or2_4 schematic

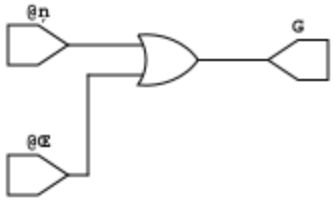

gf180mcu_fd_sc_mcu9t5v0__or2_4 layout

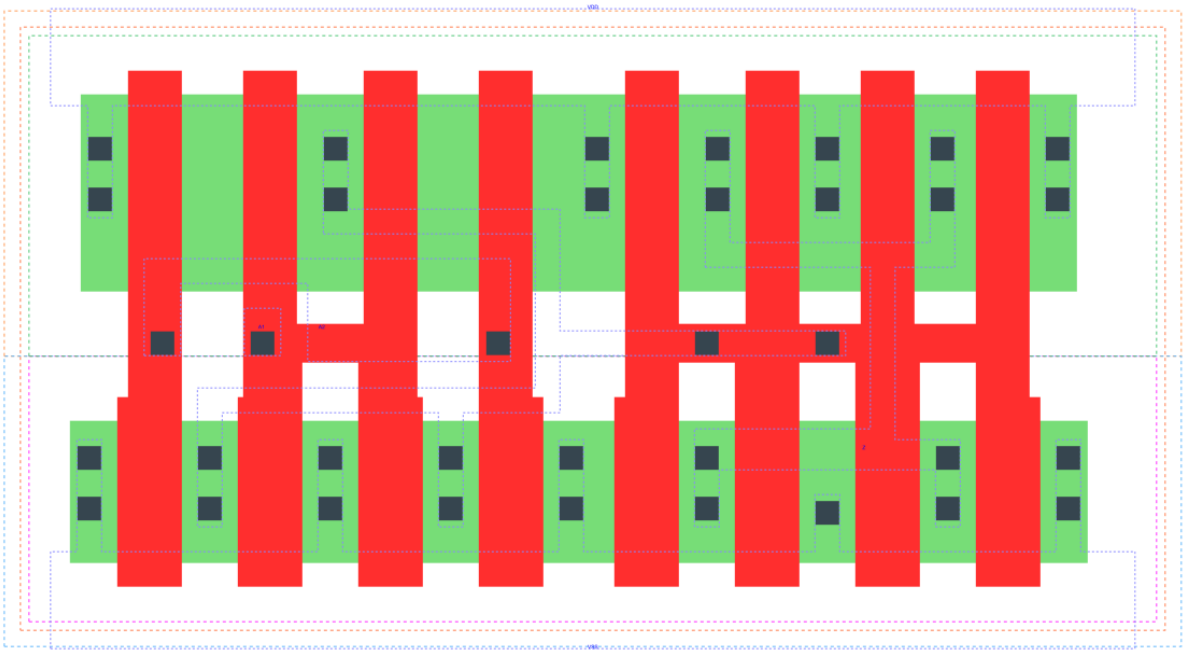

OR2_X4 is a 2-input OR with 4X drive strength

Attributes

Attribute	Value
area	50.803200 μm^2

OUTPUT FUNCTIONS

Output Pin	Function
Z	(A1|A2)

TRUTH TABLE FOR Z

A1	A2	Z
1	?	1
?	1	1
0	0	0

FUNCTIONAL SCHEMATIC

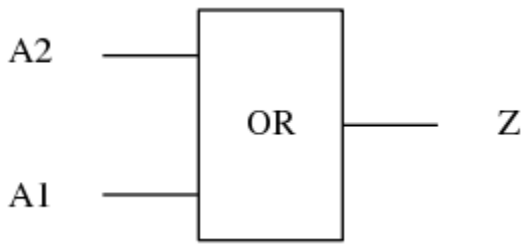

PIN CAPACITANCE (pf)

Pin	Type	Capacitance (pf)
A2	input	0.0141
A1	input	0.0136

DELAY AND OUTPUT TRANSITION TIME corresponding to min slew and load

Input Pin	Output	When Condition	Tin (ns)	Out Load (pf)	Delay (ns)	Tout (ns)
A2(HL)	Z(HL)	!A1	0.0100	0.0010	0.2448	0.0369
A2(LH)	Z(LH)	!A1	0.0100	0.0010	0.1370	0.0239
A1(LH)	Z(LH)	!A2	0.0100	0.0010	0.1204	0.0229
A1(HL)	Z(HL)	!A2	0.0100	0.0010	0.2206	0.0368

DYNAMIC ENERGY

Input Pin	When Condition	Tin (ns)	Output	Out Load (pf)	Energy (uW/MHz)
A2	!A1	0.0100	Z(HL)	0.0010	1.2077
A2	!A1	0.0100	Z(LH)	0.0010	0.5699
A1	!A2	0.0100	Z(LH)	0.0010	0.4879
A1	!A2	0.0100	Z(HL)	0.0010	1.1174
A2(LH)	A1	0.0100	n/a	n/a	-0.0992
A1(LH)	A2	0.0100	n/a	n/a	-0.0334
A1(HL)	A2	0.0100	n/a	n/a	0.0790
A2(HL)	A1	0.0100	n/a	n/a	0.1187

LEAKAGE POWER

When Condition	Power (nW)
!A1&!A2	0.2598
!A1&A2	0.2770
A1&!A2	0.2060
A1&A2	0.2060

gf180mcu_fd_sc_mcu9t5v0__or3_1

gf180mcu_fd_sc_mcu9t5v0__or3_1 symbol

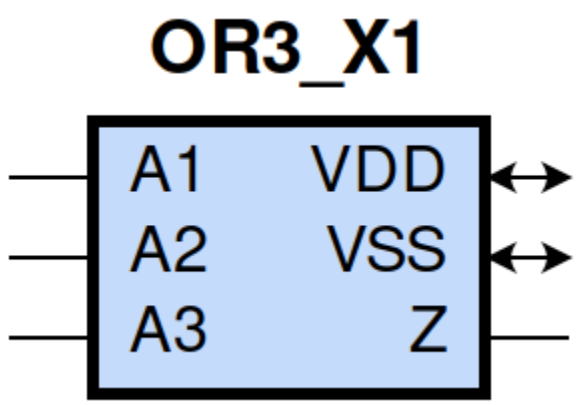

gf180mcu_fd_sc_mcu9t5v0__or3_1 schematic

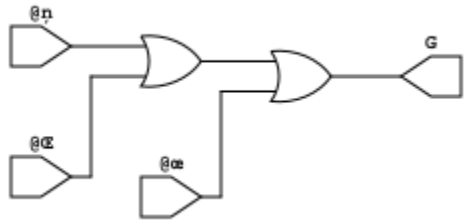

gf180mcu_fd_sc_mcu9t5v0__or3_1 layout

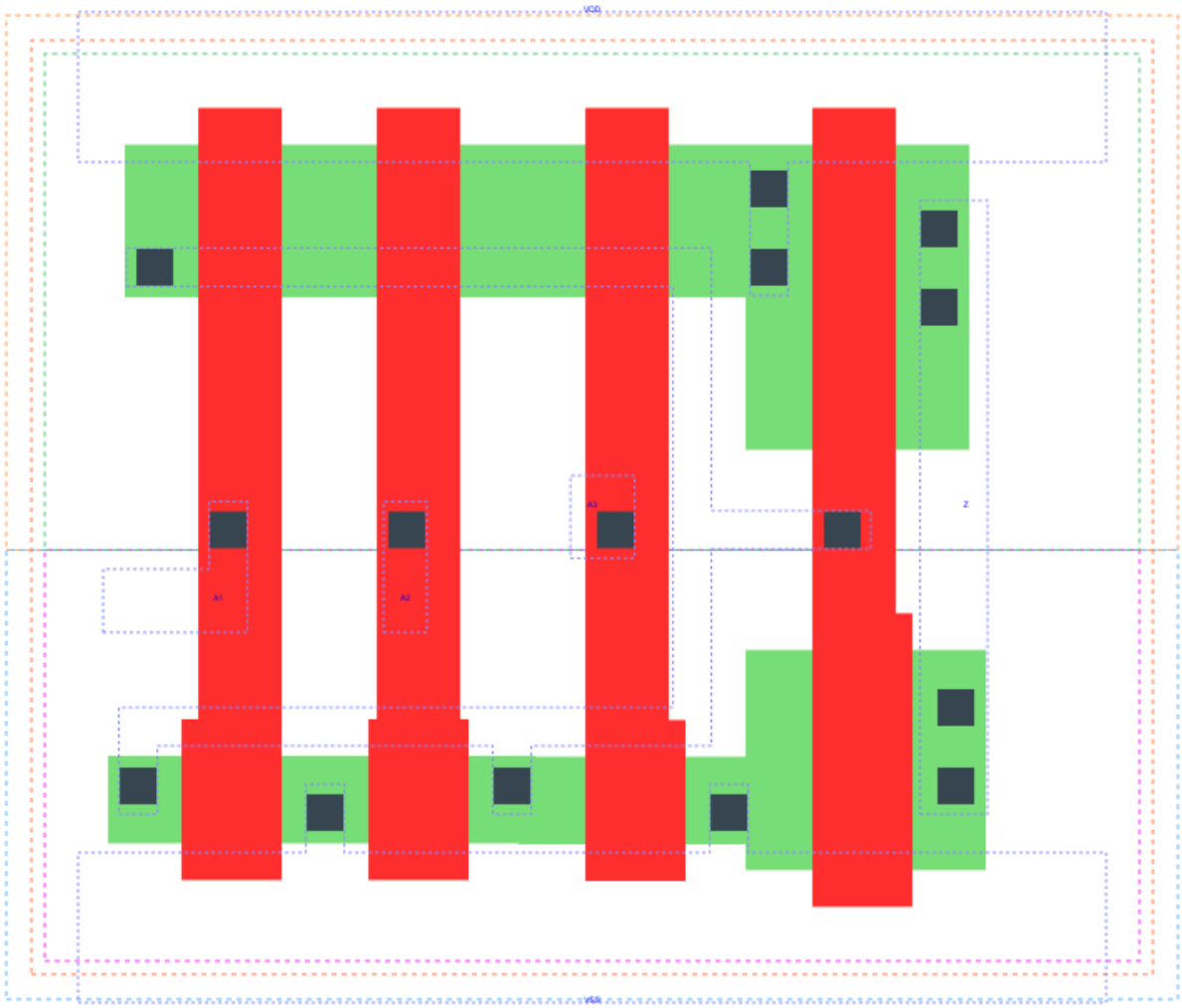

OR3_X1 is a 3-input OR with 1X drive strength

Attributes

Attribute	Value
area	31.046400 μm^2

OUTPUT FUNCTIONS

Output Pin	Function
Z	(A1|A2|A3)

TRUTH TABLE FOR Z

A1	A2	A3	Z
1	?	?	1
?	1	?	1
?	?	1	1
0	0	0	0

FUNCTIONAL SCHEMATIC

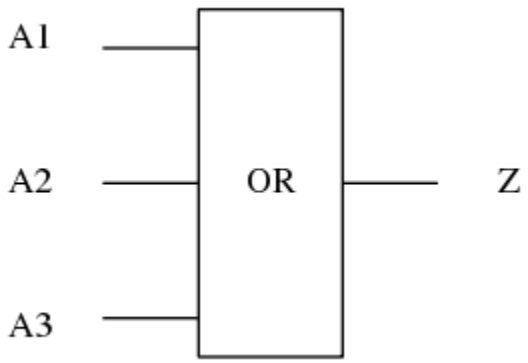

PIN CAPACITANCE (pf)

Pin	Type	Capacitance (pf)
A1	input	0.0038
A2	input	0.0035
A3	input	0.0036

DELAY AND OUTPUT TRANSITION TIME corresponding to min slew and load

Input Pin	Output	When Condition	Tin (ns)	Out Load (pf)	Delay (ns)	Tout (ns)
A1(LH)	Z(LH)	!A2&!A3	0.0100	0.0010	0.1778	0.0371
A1(HL)	Z(HL)	!A2&!A3	0.0100	0.0010	0.3750	0.0704
A2(HL)	Z(HL)	!A1&!A3	0.0100	0.0010	0.4337	0.0702
A2(LH)	Z(LH)	!A1&!A3	0.0100	0.0010	0.2002	0.0381
A3(LH)	Z(LH)	!A1&!A2	0.0100	0.0010	0.2130	0.0397
A3(HL)	Z(HL)	!A1&!A2	0.0100	0.0010	0.4609	0.0702

DYNAMIC ENERGY

Input Pin	When Condition	Tin (ns)	Output	Out Load (pf)	Energy (uW/MHz)
A3	!A1&!A2	0.0100	Z(LH)	0.0010	0.2099
A2	!A1&!A3	0.0100	Z(HL)	0.0010	0.4382
A2	!A1&!A3	0.0100	Z(LH)	0.0010	0.1839
A1	!A2&!A3	0.0100	Z(LH)	0.0010	0.1597
A3	!A1&!A2	0.0100	Z(HL)	0.0010	0.4597
A1	!A2&!A3	0.0100	Z(HL)	0.0010	0.4157
A3(LH)	!A1&A2	0.0100	n/a	n/a	-0.0253
A3(LH)	A1&!A2	0.0100	n/a	n/a	-0.0246
A3(LH)	A1&A2	0.0100	n/a	n/a	-0.0276
A2(LH)	!A1&A3	0.0100	n/a	n/a	-0.0090
A2(LH)	A1&!A3	0.0100	n/a	n/a	-0.0244
A2(LH)	A1&A3	0.0100	n/a	n/a	-0.0215
A1(LH)	!A2&A3	0.0100	n/a	n/a	-0.0082
A1(LH)	A2&!A3	0.0100	n/a	n/a	-0.0083
A1(LH)	A2&A3	0.0100	n/a	n/a	-0.0083
A3(HL)	!A1&A2	0.0100	n/a	n/a	0.0293
A3(HL)	A1&!A2	0.0100	n/a	n/a	0.0293
A3(HL)	A1&A2	0.0100	n/a	n/a	0.0292
A1(HL)	!A2&A3	0.0100	n/a	n/a	0.0432
A1(HL)	A2&!A3	0.0100	n/a	n/a	0.0211
A1(HL)	A2&A3	0.0100	n/a	n/a	0.0210
A2(HL)	!A1&A3	0.0100	n/a	n/a	0.0227
A2(HL)	A1&!A3	0.0100	n/a	n/a	0.0293
A2(HL)	A1&A3	0.0100	n/a	n/a	0.0183

LEAKAGE POWER

When Condition	Power (nW)
!A1&!A2&!A3	0.1535
!A1&!A2&A3	0.1731
!A1&A2&!A3	0.1377
!A1&A2&A3	0.1377
A1&!A2&!A3	0.1019
A1&!A2&A3	0.1019
A1&A2&!A3	0.1019
A1&A2&A3	0.1019

gf180mcu_fd_sc_mcu9t5v0__or3_2

gf180mcu_fd_sc_mcu9t5v0__or3_2 symbol

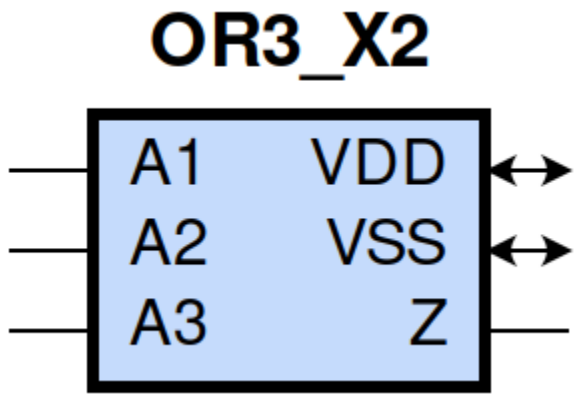

gf180mcu_fd_sc_mcu9t5v0__or3_2 schematic

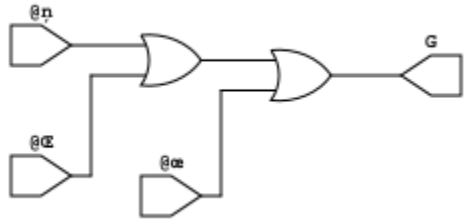

gf180mcu_fd_sc_mcu9t5v0__or3_2 layout

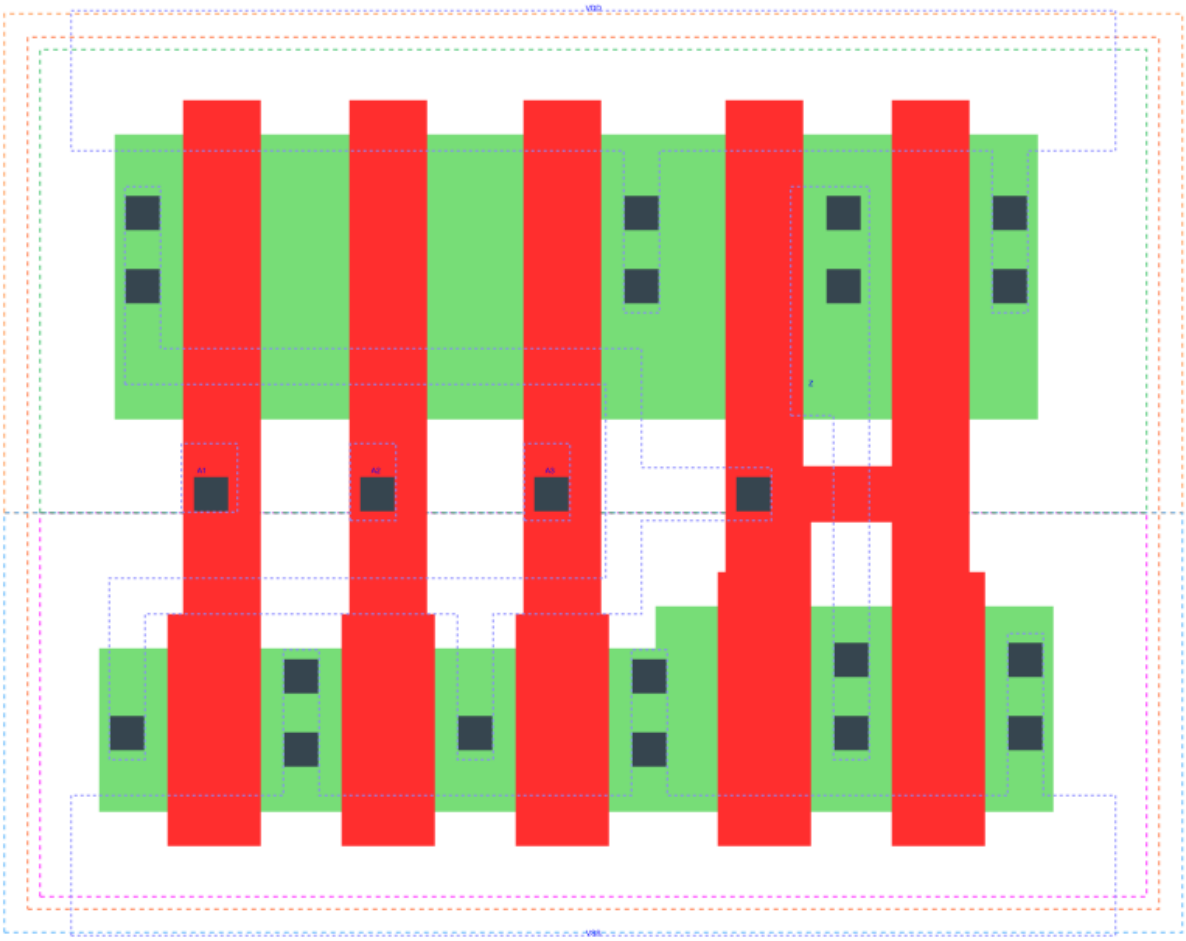

OR3_X2 is a 3-input OR with 2X drive strength

Attributes

Attribute	Value
area	33.868800 μm^2

OUTPUT FUNCTIONS

Output Pin	Function
Z	(A1|A2|A3)

TRUTH TABLE FOR Z

A1	A2	A3	Z
1	?	?	1
?	1	?	1
?	?	1	1
0	0	0	0

FUNCTIONAL SCHEMATIC

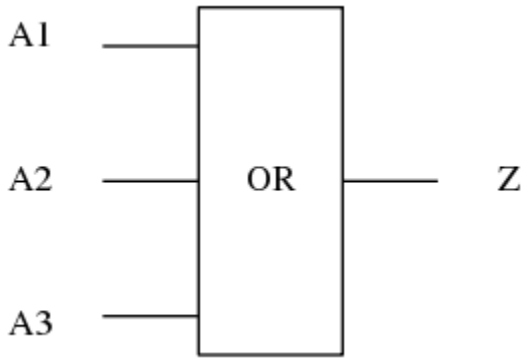

PIN CAPACITANCE (pf)

Pin	Type	Capacitance (pf)
A1	input	0.0063
A2	input	0.0061
A3	input	0.0061

DELAY AND OUTPUT TRANSITION TIME corresponding to min slew and load

Input Pin	Output	When Condition	Tin (ns)	Out Load (pf)	Delay (ns)	Tout (ns)
A1(LH)	Z(LH)	!A2&!A3	0.0100	0.0010	0.1553	0.0274
A1(HL)	Z(HL)	!A2&!A3	0.0100	0.0010	0.3138	0.0543
A2(HL)	Z(HL)	!A1&!A3	0.0100	0.0010	0.3697	0.0543
A2(LH)	Z(LH)	!A1&!A3	0.0100	0.0010	0.1785	0.0285
A3(LH)	Z(LH)	!A1&!A2	0.0100	0.0010	0.1910	0.0300
A3(HL)	Z(HL)	!A1&!A2	0.0100	0.0010	0.3933	0.0545

DYNAMIC ENERGY

Input Pin	When Condition	Tin (ns)	Output	Out Load (pf)	Energy (uW/MHz)
A3	!A1&!A2	0.0100	Z(LH)	0.0010	0.3700
A2	!A1&!A3	0.0100	Z(HL)	0.0010	0.7640
A2	!A1&!A3	0.0100	Z(LH)	0.0010	0.3231
A1	!A2&!A3	0.0100	Z(LH)	0.0010	0.2763
A3	!A1&!A2	0.0100	Z(HL)	0.0010	0.8080
A1	!A2&!A3	0.0100	Z(HL)	0.0010	0.7185
A3(LH)	!A1&A2	0.0100	n/a	n/a	-0.0515
A3(LH)	A1&!A2	0.0100	n/a	n/a	-0.0492
A3(LH)	A1&A2	0.0100	n/a	n/a	-0.0562
A2(LH)	!A1&A3	0.0100	n/a	n/a	-0.0179
A2(LH)	A1&!A3	0.0100	n/a	n/a	-0.0496
A2(LH)	A1&A3	0.0100	n/a	n/a	-0.0437
A1(LH)	!A2&A3	0.0100	n/a	n/a	-0.0163
A1(LH)	A2&!A3	0.0100	n/a	n/a	-0.0167
A1(LH)	A2&A3	0.0100	n/a	n/a	-0.0167
A3(HL)	!A1&A2	0.0100	n/a	n/a	0.0596
A3(HL)	A1&!A2	0.0100	n/a	n/a	0.0595
A3(HL)	A1&A2	0.0100	n/a	n/a	0.0596
A1(HL)	!A2&A3	0.0100	n/a	n/a	0.0773
A1(HL)	A2&!A3	0.0100	n/a	n/a	0.0395
A1(HL)	A2&A3	0.0100	n/a	n/a	0.0395
A2(HL)	!A1&A3	0.0100	n/a	n/a	0.0389
A2(HL)	A1&!A3	0.0100	n/a	n/a	0.0596
A2(HL)	A1&A3	0.0100	n/a	n/a	0.0352

LEAKAGE POWER

When Condition	Power (nW)
!A1&!A2&!A3	0.1802
!A1&!A2&A3	0.1987
!A1&A2&!A3	0.1635
!A1&A2&A3	0.1635
A1&!A2&!A3	0.1280
A1&!A2&A3	0.1280
A1&A2&!A3	0.1280
A1&A2&A3	0.1280

gf180mcu_fd_sc_mcu9t5v0__or3_4

gf180mcu_fd_sc_mcu9t5v0__or3_4 symbol

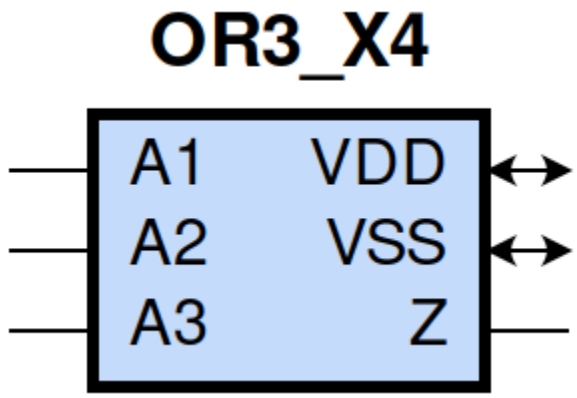

gf180mcu_fd_sc_mcu9t5v0__or3_4 schematic

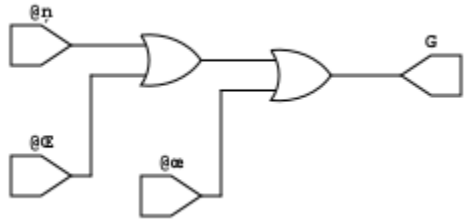

gf180mcu_fd_sc_mcu9t5v0__or3_4 layout

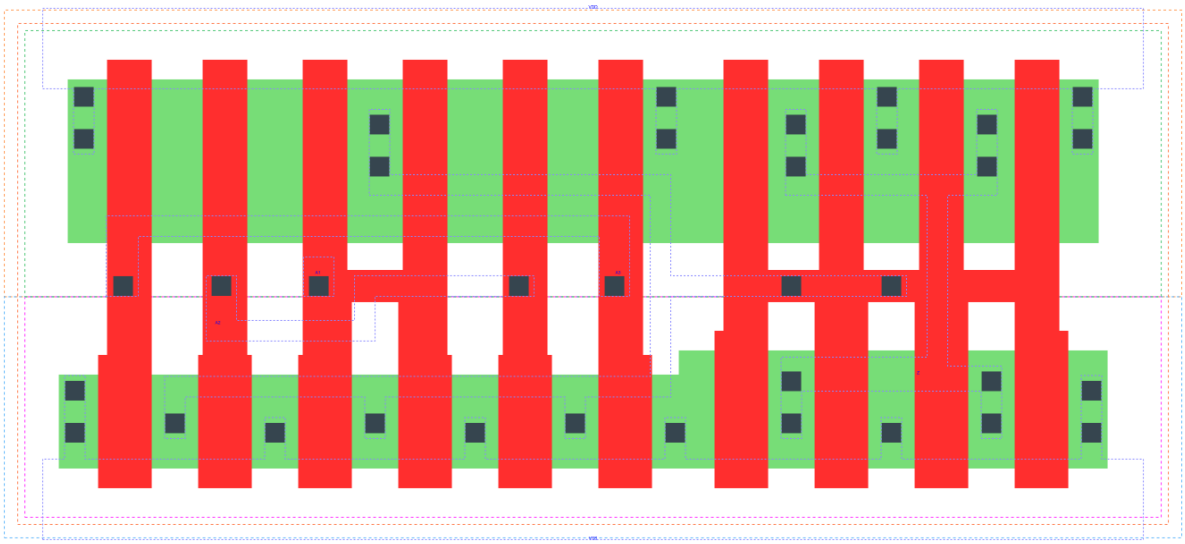

OR3_X4 is a 3-input OR with 4X drive strength

Attributes

Attribute	Value
area	62.092800 μm^2

OUTPUT FUNCTIONS

Output Pin	Function
Z	(A1|A2|A3)

TRUTH TABLE FOR Z

A1	A2	A3	Z
1	?	?	1
?	1	?	1
?	?	1	1
0	0	0	0

FUNCTIONAL SCHEMATIC

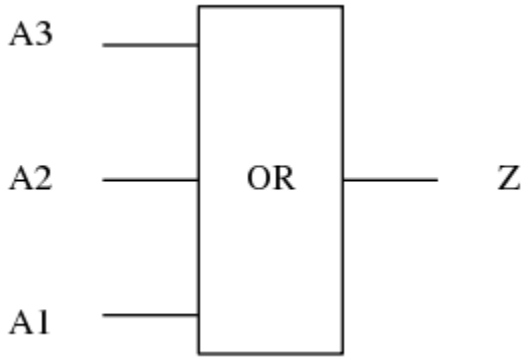

PIN CAPACITANCE (pf)

Pin	Type	Capacitance (pf)
A3	input	0.0131
A2	input	0.0127
A1	input	0.0125

DELAY AND OUTPUT TRANSITION TIME corresponding to min slew and load

Input Pin	Output	When Condition	Tin (ns)	Out Load (pf)	Delay (ns)	Tout (ns)
A3(LH)	Z(LH)	!A1&!A2	0.0100	0.0010	0.1789	0.0276
A3(HL)	Z(HL)	!A1&!A2	0.0100	0.0010	0.3699	0.0499
A2(HL)	Z(HL)	!A1&!A3	0.0100	0.0010	0.3470	0.0500
A2(LH)	Z(LH)	!A1&!A3	0.0100	0.0010	0.1673	0.0260
A1(LH)	Z(LH)	!A2&!A3	0.0100	0.0010	0.1440	0.0250
A1(HL)	Z(HL)	!A2&!A3	0.0100	0.0010	0.2899	0.0498

DYNAMIC ENERGY

Input Pin	When Condition	Tin (ns)	Output	Out Load (pf)	Energy (uW/MHz)
A3	!A1&!A2	0.0100	Z(LH)	0.0010	0.7036
A2	!A1&!A3	0.0100	Z(HL)	0.0010	1.4460
A2	!A1&!A3	0.0100	Z(LH)	0.0010	0.6135
A1	!A2&!A3	0.0100	Z(LH)	0.0010	0.5156
A3	!A1&!A2	0.0100	Z(HL)	0.0010	1.5328
A1	!A2&!A3	0.0100	Z(HL)	0.0010	1.3542
A3(LH)	!A1&A2	0.0100	n/a	n/a	-0.1032
A3(LH)	A1&!A2	0.0100	n/a	n/a	-0.0985
A3(LH)	A1&A2	0.0100	n/a	n/a	-0.1126
A2(LH)	!A1&A3	0.0100	n/a	n/a	-0.0359
A2(LH)	A1&!A3	0.0100	n/a	n/a	-0.0989
A2(LH)	A1&A3	0.0100	n/a	n/a	-0.0876
A1(LH)	!A2&A3	0.0100	n/a	n/a	-0.0327
A1(LH)	A2&!A3	0.0100	n/a	n/a	-0.0336
A1(LH)	A2&A3	0.0100	n/a	n/a	-0.0336
A3(HL)	!A1&A2	0.0100	n/a	n/a	0.1188
A3(HL)	A1&!A2	0.0100	n/a	n/a	0.1188
A3(HL)	A1&A2	0.0100	n/a	n/a	0.1188
A1(HL)	!A2&A3	0.0100	n/a	n/a	0.1547
A1(HL)	A2&!A3	0.0100	n/a	n/a	0.0816
A1(HL)	A2&A3	0.0100	n/a	n/a	0.0816
A2(HL)	!A1&A3	0.0100	n/a	n/a	0.0751
A2(HL)	A1&!A3	0.0100	n/a	n/a	0.1192
A2(HL)	A1&A3	0.0100	n/a	n/a	0.0706

LEAKAGE POWER

When Condition	Power (nW)
!A1&!A2&!A3	0.3104
!A1&!A2&A3	0.3475
!A1&A2&!A3	0.2770
!A1&A2&A3	0.2770
A1&!A2&!A3	0.2060
A1&!A2&A3	0.2060
A1&A2&!A3	0.2060
A1&A2&A3	0.2060

gf180mcu_fd_sc_mcu9t5v0__or4_1

gf180mcu_fd_sc_mcu9t5v0__or4_1 symbol

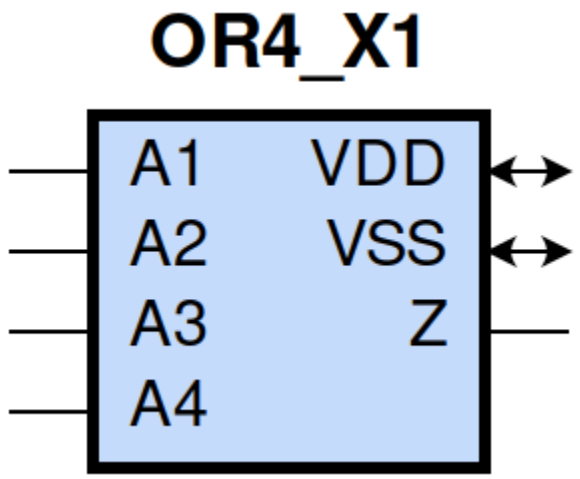

gf180mcu_fd_sc_mcu9t5v0__or4_1 schematic

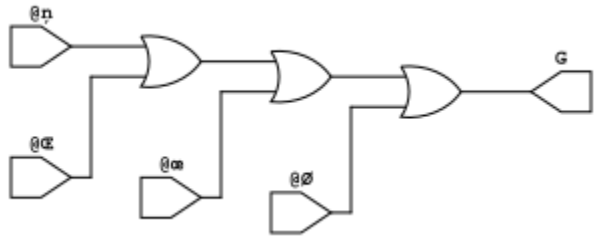

gf180mcu_fd_sc_mcu9t5v0__or4_1 layout

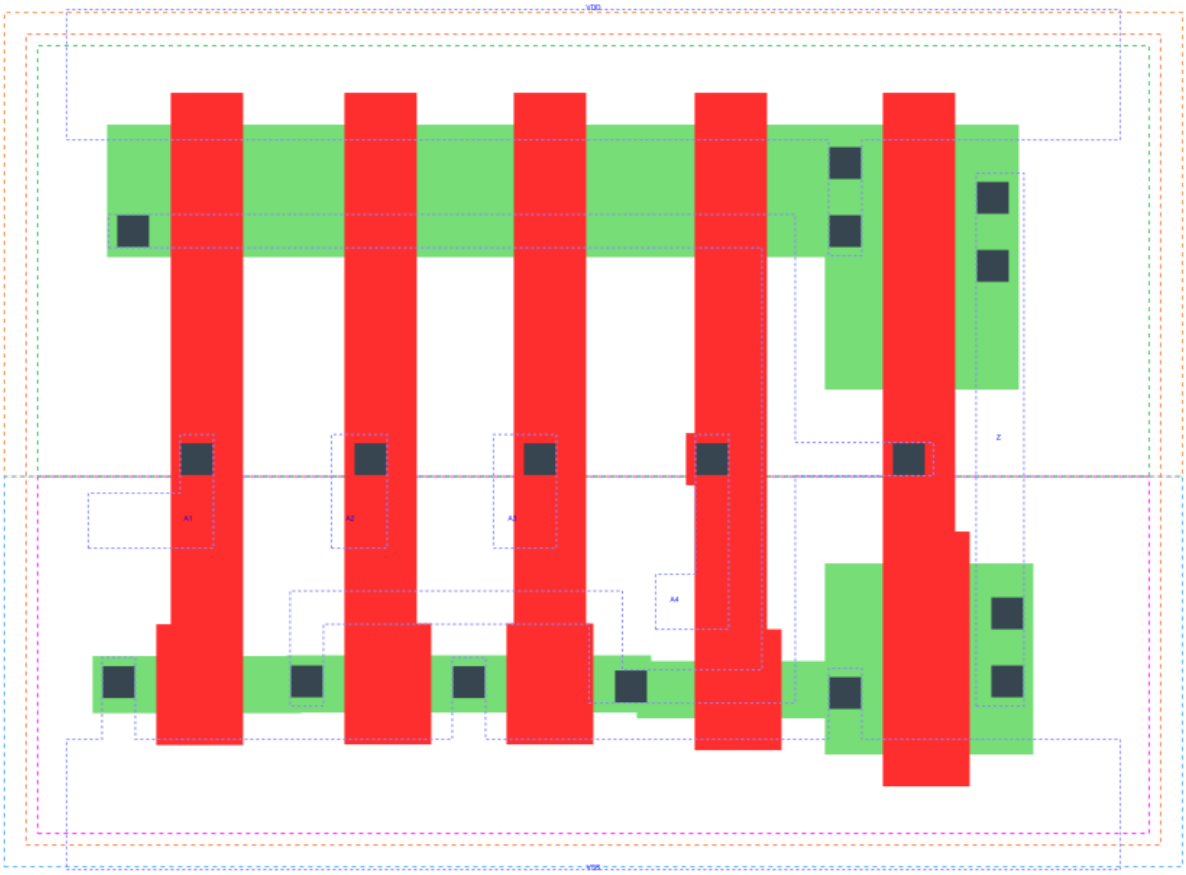

OR4_X1 is a 4-input OR with 1X drive strength

Attributes

Attribute	Value
area	36.691200 μm^2

OUTPUT FUNCTIONS

Output Pin	Function
Z	(A1|A2|A3|A4)

TRUTH TABLE FOR Z

A1	A2	A3	A4	Z
1	?	?	?	1
?	1	?	?	1
?	?	1	?	1
?	?	?	1	1
0	0	0	0	0

FUNCTIONAL SCHEMATIC

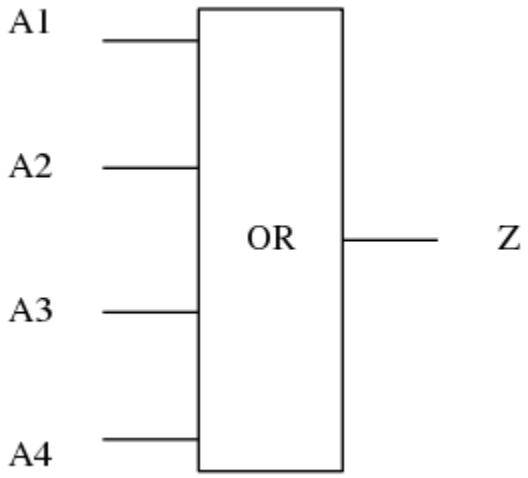

PIN CAPACITANCE (pf)

Pin	Type	Capacitance (pf)
A1	input	0.0034
A2	input	0.0033
A3	input	0.0034
A4	input	0.0034

DELAY AND OUTPUT TRANSITION TIME corresponding to min slew and load

Input Pin	Output	When Condition	Tin (ns)	Out Load (pf)	Delay (ns)	Tout (ns)
A1(LH)	Z(LH)	!A2&!A3&!A4	0.0100	0.0010	0.2178	0.0408
A1(HL)	Z(HL)	!A2&!A3&!A4	0.0100	0.0010	0.4523	0.0877
A2(HL)	Z(HL)	!A1&!A3&!A4	0.0100	0.0010	0.5496	0.0878
A2(LH)	Z(LH)	!A1&!A3&!A4	0.0100	0.0010	0.2486	0.0425
A3(LH)	Z(LH)	!A1&!A2&!A4	0.0100	0.0010	0.2686	0.0445
A3(HL)	Z(HL)	!A1&!A2&!A4	0.0100	0.0010	0.6097	0.0879
A4(LH)	Z(LH)	!A1&!A2&!A3	0.0100	0.0010	0.2773	0.0466
A4(HL)	Z(HL)	!A1&!A2&!A3	0.0100	0.0010	0.6365	0.0879

DYNAMIC ENERGY

Input Pin	When Condition	Tin (ns)	Output	Out Load (pf)	Energy (uW/MHz)
A3	!A1&!A2&!A4	0.0100	Z(LH)	0.0010	0.2282
A2	!A1&!A3&!A4	0.0100	Z(HL)	0.0010	0.5230
A2	!A1&!A3&!A4	0.0100	Z(LH)	0.0010	0.1997
A4	!A1&!A2&!A3	0.0100	Z(LH)	0.0010	0.2551
A1	!A2&!A3&!A4	0.0100	Z(LH)	0.0010	0.1709
A3	!A1&!A2&!A4	0.0100	Z(HL)	0.0010	0.5448
A4	!A1&!A2&!A3	0.0100	Z(HL)	0.0010	0.5664
A1	!A2&!A3&!A4	0.0100	Z(HL)	0.0010	0.4992
A3(LH)	!A1&!A2&A4	0.0100	n/a	n/a	-0.0099
A3(LH)	!A1&A2&!A4	0.0100	n/a	n/a	-0.0254
A3(LH)	!A1&A2&A4	0.0100	n/a	n/a	-0.0228
A3(LH)	A1&!A2&!A4	0.0100	n/a	n/a	-0.0237
A3(LH)	A1&!A2&A4	0.0100	n/a	n/a	-0.0204
A3(LH)	A1&A2&!A4	0.0100	n/a	n/a	-0.0278
A3(LH)	A1&A2&A4	0.0100	n/a	n/a	-0.0265
A2(LH)	!A1&!A3&A4	0.0100	n/a	n/a	-0.0088
A2(LH)	!A1&A3&!A4	0.0100	n/a	n/a	-0.0090
A2(LH)	!A1&A3&A4	0.0100	n/a	n/a	-0.0090
A2(LH)	A1&!A3&!A4	0.0100	n/a	n/a	-0.0243
A2(LH)	A1&!A3&A4	0.0100	n/a	n/a	-0.0188
A2(LH)	A1&A3&!A4	0.0100	n/a	n/a	-0.0215
A2(LH)	A1&A3&A4	0.0100	n/a	n/a	-0.0207
A1(LH)	!A2&!A3&A4	0.0100	n/a	n/a	-0.0083
A1(LH)	!A2&A3&!A4	0.0100	n/a	n/a	-0.0082
A1(LH)	!A2&A3&A4	0.0100	n/a	n/a	-0.0082
A1(LH)	A2&!A3&!A4	0.0100	n/a	n/a	-0.0084
A1(LH)	A2&!A3&A4	0.0100	n/a	n/a	-0.0084
A1(LH)	A2&A3&!A4	0.0100	n/a	n/a	-0.0084
A1(LH)	A2&A3&A4	0.0100	n/a	n/a	-0.0084
A3(HL)	!A1&!A2&A4	0.0100	n/a	n/a	0.0215
A3(HL)	!A1&A2&!A4	0.0100	n/a	n/a	0.0293
A3(HL)	!A1&A2&A4	0.0100	n/a	n/a	0.0185
A3(HL)	A1&!A2&!A4	0.0100	n/a	n/a	0.0294
A3(HL)	A1&!A2&A4	0.0100	n/a	n/a	0.0180

continues on next page

Table 268 – continued from previous page

A3(HL)	A1&A2&!A4	0.0100	n/a	n/a	0.0293
A3(HL)	A1&A2&A4	0.0100	n/a	n/a	0.0185
A4(LH)	!A1&!A2&A3	0.0100	n/a	n/a	-0.0261
A4(LH)	!A1&A2&!A3	0.0100	n/a	n/a	-0.0253
A4(LH)	!A1&A2&A3	0.0100	n/a	n/a	-0.0277
A4(LH)	A1&!A2&!A3	0.0100	n/a	n/a	-0.0247
A4(LH)	A1&!A2&A3	0.0100	n/a	n/a	-0.0273
A4(LH)	A1&A2&!A3	0.0100	n/a	n/a	-0.0253
A4(LH)	A1&A2&A3	0.0100	n/a	n/a	-0.0277
A1(HL)	!A2&!A3&A4	0.0100	n/a	n/a	0.0657
A1(HL)	!A2&A3&!A4	0.0100	n/a	n/a	0.0440
A1(HL)	!A2&A3&A4	0.0100	n/a	n/a	0.0440
A1(HL)	A2&!A3&!A4	0.0100	n/a	n/a	0.0230
A1(HL)	A2&!A3&A4	0.0100	n/a	n/a	0.0230
A1(HL)	A2&A3&!A4	0.0100	n/a	n/a	0.0230
A1(HL)	A2&A3&A4	0.0100	n/a	n/a	0.0230
A2(HL)	!A1&!A3&A4	0.0100	n/a	n/a	0.0432
A2(HL)	!A1&A3&!A4	0.0100	n/a	n/a	0.0214
A2(HL)	!A1&A3&A4	0.0100	n/a	n/a	0.0214
A2(HL)	A1&!A3&!A4	0.0100	n/a	n/a	0.0293
A2(HL)	A1&!A3&A4	0.0100	n/a	n/a	0.0180
A2(HL)	A1&A3&!A4	0.0100	n/a	n/a	0.0184
A2(HL)	A1&A3&A4	0.0100	n/a	n/a	0.0184
A4(HL)	!A1&!A2&A3	0.0100	n/a	n/a	0.0293
A4(HL)	!A1&A2&!A3	0.0100	n/a	n/a	0.0293
A4(HL)	!A1&A2&A3	0.0100	n/a	n/a	0.0293
A4(HL)	A1&!A2&!A3	0.0100	n/a	n/a	0.0293
A4(HL)	A1&!A2&A3	0.0100	n/a	n/a	0.0293
A4(HL)	A1&A2&!A3	0.0100	n/a	n/a	0.0293
A4(HL)	A1&A2&A3	0.0100	n/a	n/a	0.0293

LEAKAGE POWER

When Condition	Power (nW)
!A1&!A2&!A3&!A4	0.1827
!A1&!A2&!A3&A4	0.2082
!A1&!A2&A3&!A4	0.1731
!A1&!A2&A3&A4	0.1731
!A1&A2&!A3&!A4	0.1377
!A1&A2&!A3&A4	0.1377
!A1&A2&A3&!A4	0.1377
!A1&A2&A3&A4	0.1377
A1&!A2&!A3&!A4	0.1019
A1&!A2&!A3&A4	0.1019
A1&!A2&A3&!A4	0.1019
A1&!A2&A3&A4	0.1019
A1&A2&!A3&!A4	0.1019
A1&A2&!A3&A4	0.1019
A1&A2&A3&!A4	0.1019
A1&A2&A3&A4	0.1019

gf180mcu_fd_sc_mcu9t5v0__or4_2

gf180mcu_fd_sc_mcu9t5v0__or4_2 symbol

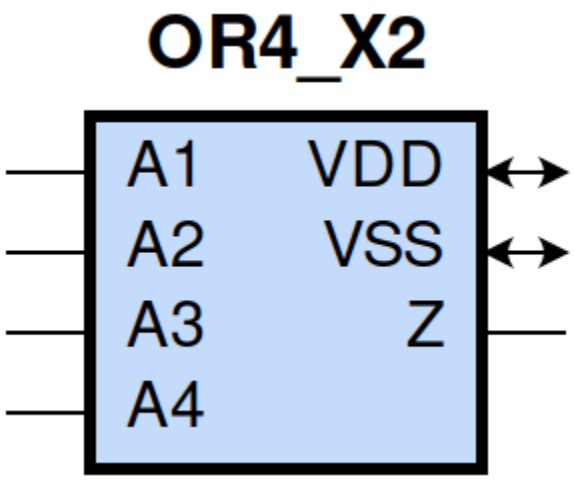

gf180mcu_fd_sc_mcu9t5v0__or4_2 schematic

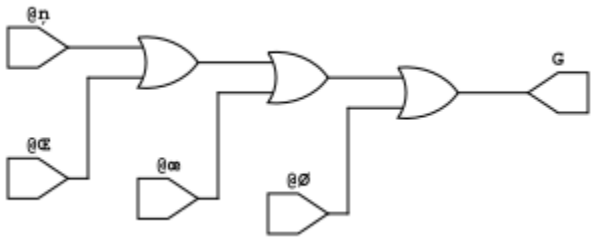

gf180mcu_fd_sc_mcu9t5v0__or4_2 layout

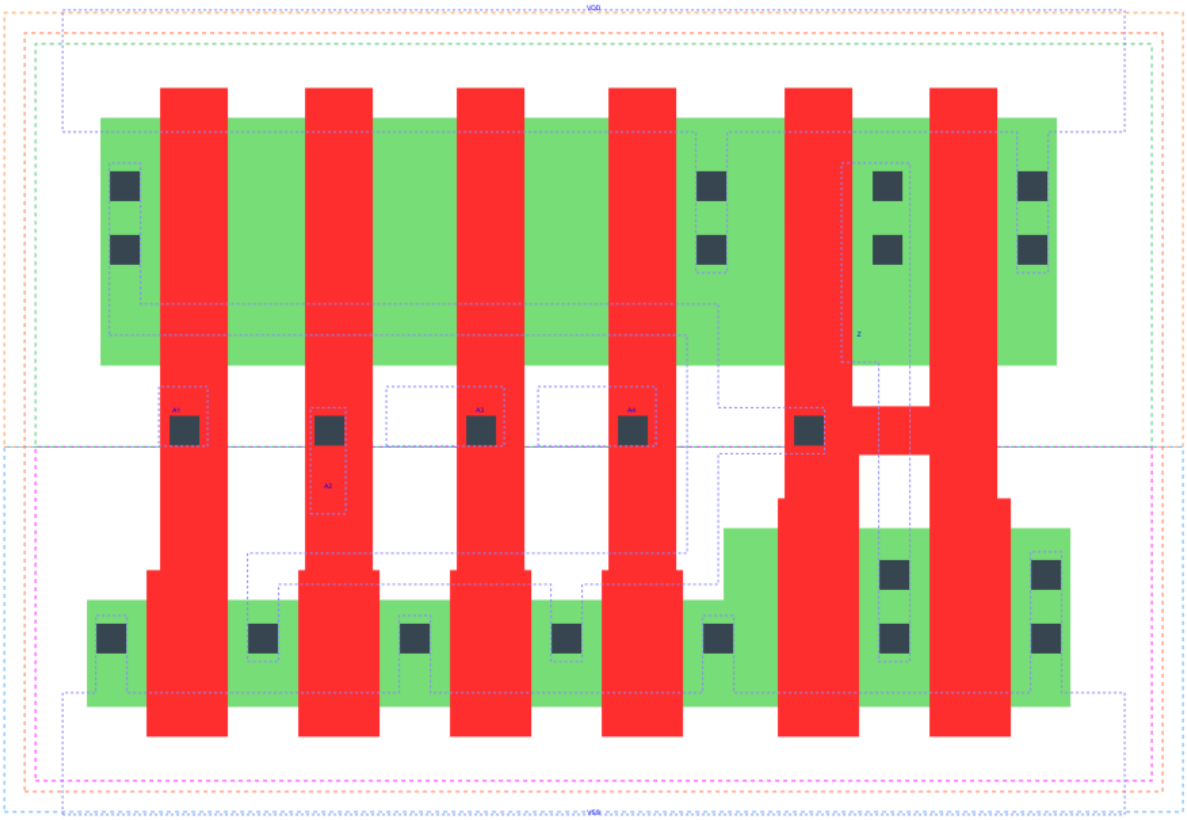

OR4_X2 is a 4-input OR with 2X drive strength

Attributes

Attribute	Value
area	39.513600 μm^2

OUTPUT FUNCTIONS

Output Pin	Function
Z	(A1|A2|A3|A4)

TRUTH TABLE FOR Z

A1	A2	A3	A4	Z
1	?	?	?	1
?	1	?	?	1
?	?	1	?	1
?	?	?	1	1
0	0	0	0	0

FUNCTIONAL SCHEMATIC

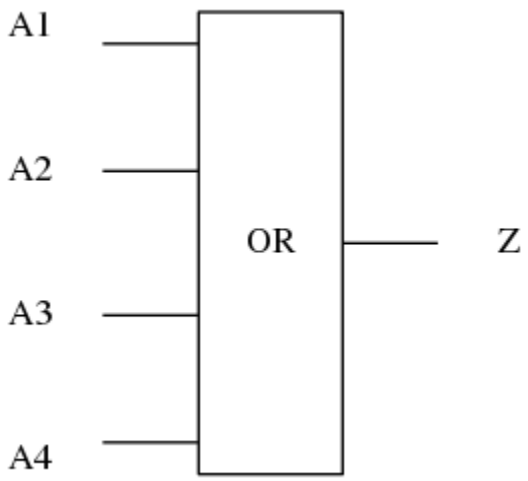

PIN CAPACITANCE (pf)

Pin	Type	Capacitance (pf)
A1	input	0.0057
A2	input	0.0056
A3	input	0.0057
A4	input	0.0057

DELAY AND OUTPUT TRANSITION TIME corresponding to min slew and load

Input Pin	Output	When Condition	Tin (ns)	Out Load (pf)	Delay (ns)	Tout (ns)
A1(LH)	Z(LH)	!A2&!A3&!A4	0.0100	0.0010	0.1900	0.0305
A1(HL)	Z(HL)	!A2&!A3&!A4	0.0100	0.0010	0.3620	0.0667
A2(HL)	Z(HL)	!A1&!A3&!A4	0.0100	0.0010	0.4501	0.0668
A2(LH)	Z(LH)	!A1&!A3&!A4	0.0100	0.0010	0.2214	0.0321
A3(LH)	Z(LH)	!A1&!A2&!A4	0.0100	0.0010	0.2426	0.0340
A3(HL)	Z(HL)	!A1&!A2&!A4	0.0100	0.0010	0.5056	0.0670
A4(LH)	Z(LH)	!A1&!A2&!A3	0.0100	0.0010	0.2515	0.0363
A4(HL)	Z(HL)	!A1&!A2&!A3	0.0100	0.0010	0.5292	0.0670

DYNAMIC ENERGY

Input Pin	When Condition	Tin (ns)	Output	Out Load (pf)	Energy (uW/MHz)
A3	!A1&!A2&!A4	0.0100	Z(LH)	0.0010	0.4054
A2	!A1&!A3&!A4	0.0100	Z(HL)	0.0010	0.8743
A2	!A1&!A3&!A4	0.0100	Z(LH)	0.0010	0.3505
A4	!A1&!A2&!A3	0.0100	Z(LH)	0.0010	0.4540
A1	!A2&!A3&!A4	0.0100	Z(LH)	0.0010	0.2985
A3	!A1&!A2&!A4	0.0100	Z(HL)	0.0010	0.9189
A4	!A1&!A2&!A3	0.0100	Z(HL)	0.0010	0.9627
A1	!A2&!A3&!A4	0.0100	Z(HL)	0.0010	0.8253
A3(LH)	!A1&!A2&A4	0.0100	n/a	n/a	-0.0193
A3(LH)	!A1&A2&!A4	0.0100	n/a	n/a	-0.0514
A3(LH)	!A1&A2&A4	0.0100	n/a	n/a	-0.0460
A3(LH)	A1&!A2&!A4	0.0100	n/a	n/a	-0.0470
A3(LH)	A1&!A2&A4	0.0100	n/a	n/a	-0.0396
A3(LH)	A1&A2&!A4	0.0100	n/a	n/a	-0.0564
A3(LH)	A1&A2&A4	0.0100	n/a	n/a	-0.0526
A2(LH)	!A1&!A3&A4	0.0100	n/a	n/a	-0.0173
A2(LH)	!A1&A3&!A4	0.0100	n/a	n/a	-0.0179
A2(LH)	!A1&A3&A4	0.0100	n/a	n/a	-0.0179
A2(LH)	A1&!A3&!A4	0.0100	n/a	n/a	-0.0495
A2(LH)	A1&!A3&A4	0.0100	n/a	n/a	-0.0372
A2(LH)	A1&A3&!A4	0.0100	n/a	n/a	-0.0438
A2(LH)	A1&A3&A4	0.0100	n/a	n/a	-0.0419
A1(LH)	!A2&!A3&A4	0.0100	n/a	n/a	-0.0165
A1(LH)	!A2&A3&!A4	0.0100	n/a	n/a	-0.0163
A1(LH)	!A2&A3&A4	0.0100	n/a	n/a	-0.0163
A1(LH)	A2&!A3&!A4	0.0100	n/a	n/a	-0.0167
A1(LH)	A2&!A3&A4	0.0100	n/a	n/a	-0.0167
A1(LH)	A2&A3&!A4	0.0100	n/a	n/a	-0.0167
A1(LH)	A2&A3&A4	0.0100	n/a	n/a	-0.0167
A3(HL)	!A1&!A2&A4	0.0100	n/a	n/a	0.0370
A3(HL)	!A1&A2&!A4	0.0100	n/a	n/a	0.0597
A3(HL)	!A1&A2&A4	0.0100	n/a	n/a	0.0354
A3(HL)	A1&!A2&!A4	0.0100	n/a	n/a	0.0596
A3(HL)	A1&!A2&A4	0.0100	n/a	n/a	0.0344

continues on next page

Table 269 – continued from previous page

A3(HL)	A1&A2&!A4	0.0100	n/a	n/a	0.0596
A3(HL)	A1&A2&A4	0.0100	n/a	n/a	0.0354
A4(LH)	!A1&!A2&A3	0.0100	n/a	n/a	-0.0528
A4(LH)	!A1&A2&!A3	0.0100	n/a	n/a	-0.0507
A4(LH)	!A1&A2&A3	0.0100	n/a	n/a	-0.0562
A4(LH)	A1&!A2&!A3	0.0100	n/a	n/a	-0.0495
A4(LH)	A1&!A2&A3	0.0100	n/a	n/a	-0.0554
A4(LH)	A1&A2&!A3	0.0100	n/a	n/a	-0.0510
A4(LH)	A1&A2&A3	0.0100	n/a	n/a	-0.0562
A1(HL)	!A2&!A3&A4	0.0100	n/a	n/a	0.1144
A1(HL)	!A2&A3&!A4	0.0100	n/a	n/a	0.0773
A1(HL)	!A2&A3&A4	0.0100	n/a	n/a	0.0773
A1(HL)	A2&!A3&!A4	0.0100	n/a	n/a	0.0395
A1(HL)	A2&!A3&A4	0.0100	n/a	n/a	0.0395
A1(HL)	A2&A3&!A4	0.0100	n/a	n/a	0.0395
A1(HL)	A2&A3&A4	0.0100	n/a	n/a	0.0395
A2(HL)	!A1&!A3&A4	0.0100	n/a	n/a	0.0761
A2(HL)	!A1&A3&!A4	0.0100	n/a	n/a	0.0389
A2(HL)	!A1&A3&A4	0.0100	n/a	n/a	0.0389
A2(HL)	A1&!A3&!A4	0.0100	n/a	n/a	0.0595
A2(HL)	A1&!A3&A4	0.0100	n/a	n/a	0.0344
A2(HL)	A1&A3&!A4	0.0100	n/a	n/a	0.0352
A2(HL)	A1&A3&A4	0.0100	n/a	n/a	0.0352
A4(HL)	!A1&!A2&A3	0.0100	n/a	n/a	0.0595
A4(HL)	!A1&A2&!A3	0.0100	n/a	n/a	0.0596
A4(HL)	!A1&A2&A3	0.0100	n/a	n/a	0.0595
A4(HL)	A1&!A2&!A3	0.0100	n/a	n/a	0.0596
A4(HL)	A1&!A2&A3	0.0100	n/a	n/a	0.0595
A4(HL)	A1&A2&!A3	0.0100	n/a	n/a	0.0596
A4(HL)	A1&A2&A3	0.0100	n/a	n/a	0.0595

LEAKAGE POWER

When Condition	Power (nW)
!A1&!A2&!A3&!A4	0.2055
!A1&!A2&!A3&A4	0.2337
!A1&!A2&A3&!A4	0.1987
!A1&!A2&A3&A4	0.1987
!A1&A2&!A3&!A4	0.1635
!A1&A2&!A3&A4	0.1635
!A1&A2&A3&!A4	0.1635
!A1&A2&A3&A4	0.1635
A1&!A2&!A3&!A4	0.1280
A1&!A2&!A3&A4	0.1280
A1&!A2&A3&!A4	0.1280
A1&!A2&A3&A4	0.1280
A1&A2&!A3&!A4	0.1280
A1&A2&!A3&A4	0.1280
A1&A2&A3&!A4	0.1280
A1&A2&A3&A4	0.1280

gf180mcu_fd_sc_mcu9t5v0__or4_4

gf180mcu_fd_sc_mcu9t5v0__or4_4 symbol

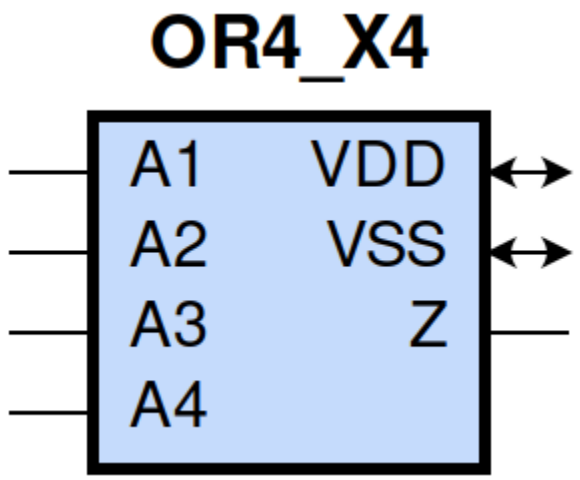

gf180mcu_fd_sc_mcu9t5v0__or4_4 schematic

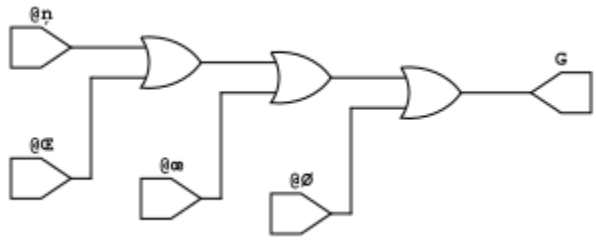

gf180mcu_fd_sc_mcu9t5v0__or4_4 layout

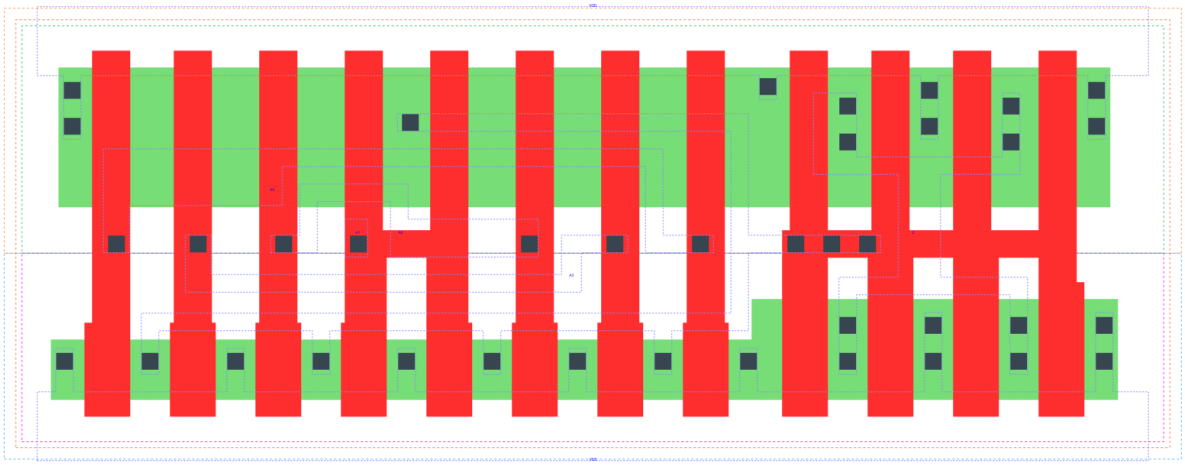

OR4_X4 is a 4-input OR with 4X drive strength

Attributes

Attribute	Value
area	73.382400 μm^2

OUTPUT FUNCTIONS

Output Pin	Function
Z	(A1|A2|A3|A4)

TRUTH TABLE FOR Z

A1	A2	A3	A4	Z
1	?	?	?	1
?	1	?	?	1
?	?	1	?	1
?	?	?	1	1
0	0	0	0	0

FUNCTIONAL SCHEMATIC

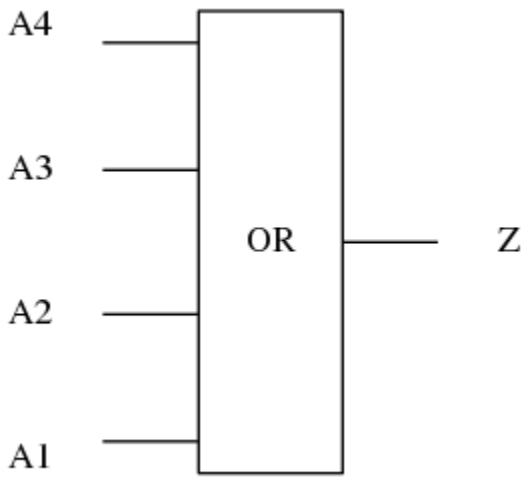

PIN CAPACITANCE (pf)

Pin	Type	Capacitance (pf)
A4	input	0.0127
A3	input	0.0123
A2	input	0.0120
A1	input	0.0114

DELAY AND OUTPUT TRANSITION TIME corresponding to min slew and load

Input Pin	Output	When Condition	Tin (ns)	Out Load (pf)	Delay (ns)	Tout (ns)
A4(LH)	Z(LH)	!A1&!A2&!A3	0.0100	0.0010	0.2433	0.0345
A4(HL)	Z(HL)	!A1&!A2&!A3	0.0100	0.0010	0.5147	0.0641
A3(LH)	Z(LH)	!A1&!A2&!A4	0.0100	0.0010	0.2349	0.0328
A3(HL)	Z(HL)	!A1&!A2&!A4	0.0100	0.0010	0.4914	0.0641
A2(HL)	Z(HL)	!A1&!A3&!A4	0.0100	0.0010	0.4361	0.0641
A2(LH)	Z(LH)	!A1&!A3&!A4	0.0100	0.0010	0.2143	0.0305
A1(LH)	Z(LH)	!A2&!A3&!A4	0.0100	0.0010	0.1826	0.0290
A1(HL)	Z(HL)	!A2&!A3&!A4	0.0100	0.0010	0.3464	0.0637

DYNAMIC ENERGY

Input Pin	When Condition	Tin (ns)	Output	Out Load (pf)	Energy (uW/MHz)
A3	!A1&!A2&!A4	0.0100	Z(LH)	0.0010	0.7916
A2	!A1&!A3&!A4	0.0100	Z(HL)	0.0010	1.7150
A2	!A1&!A3&!A4	0.0100	Z(LH)	0.0010	0.6812
A4	!A1&!A2&!A3	0.0100	Z(LH)	0.0010	0.8870
A1	!A2&!A3&!A4	0.0100	Z(LH)	0.0010	0.5733
A3	!A1&!A2&!A4	0.0100	Z(HL)	0.0010	1.8031
A4	!A1&!A2&!A3	0.0100	Z(HL)	0.0010	1.8906
A1	!A2&!A3&!A4	0.0100	Z(HL)	0.0010	1.6152
A3(LH)	!A1&!A2&A4	0.0100	n/a	n/a	-0.0387
A3(LH)	!A1&A2&!A4	0.0100	n/a	n/a	-0.1029
A3(LH)	!A1&A2&A4	0.0100	n/a	n/a	-0.0924
A3(LH)	A1&!A2&!A4	0.0100	n/a	n/a	-0.0943
A3(LH)	A1&!A2&A4	0.0100	n/a	n/a	-0.0796
A3(LH)	A1&A2&!A4	0.0100	n/a	n/a	-0.1129
A3(LH)	A1&A2&A4	0.0100	n/a	n/a	-0.1059
A2(LH)	!A1&!A3&A4	0.0100	n/a	n/a	-0.0347
A2(LH)	!A1&A3&!A4	0.0100	n/a	n/a	-0.0360
A2(LH)	!A1&A3&A4	0.0100	n/a	n/a	-0.0360
A2(LH)	A1&!A3&!A4	0.0100	n/a	n/a	-0.0989
A2(LH)	A1&!A3&A4	0.0100	n/a	n/a	-0.0744
A2(LH)	A1&A3&!A4	0.0100	n/a	n/a	-0.0875
A2(LH)	A1&A3&A4	0.0100	n/a	n/a	-0.0838
A1(LH)	!A2&!A3&A4	0.0100	n/a	n/a	-0.0330
A1(LH)	!A2&A3&!A4	0.0100	n/a	n/a	-0.0328
A1(LH)	!A2&A3&A4	0.0100	n/a	n/a	-0.0328
A1(LH)	A2&!A3&!A4	0.0100	n/a	n/a	-0.0337
A1(LH)	A2&!A3&A4	0.0100	n/a	n/a	-0.0337
A1(LH)	A2&A3&!A4	0.0100	n/a	n/a	-0.0337
A1(LH)	A2&A3&A4	0.0100	n/a	n/a	-0.0337
A3(HL)	!A1&!A2&A4	0.0100	n/a	n/a	0.0726
A3(HL)	!A1&A2&!A4	0.0100	n/a	n/a	0.1193
A3(HL)	!A1&A2&A4	0.0100	n/a	n/a	0.0709
A3(HL)	A1&!A2&!A4	0.0100	n/a	n/a	0.1193
A3(HL)	A1&!A2&A4	0.0100	n/a	n/a	0.0690
A3(HL)	A1&A2&!A4	0.0100	n/a	n/a	0.1191
A3(HL)	A1&A2&A4	0.0100	n/a	n/a	0.0709
A4(LH)	!A1&!A2&A3	0.0100	n/a	n/a	-0.1057
A4(LH)	!A1&A2&!A3	0.0100	n/a	n/a	-0.1016
A4(LH)	!A1&A2&A3	0.0100	n/a	n/a	-0.1126
A4(LH)	A1&!A2&!A3	0.0100	n/a	n/a	-0.0992
A4(LH)	A1&!A2&A3	0.0100	n/a	n/a	-0.1108
A4(LH)	A1&A2&!A3	0.0100	n/a	n/a	-0.1021
A4(LH)	A1&A2&A3	0.0100	n/a	n/a	-0.1126
A1(HL)	!A2&!A3&A4	0.0100	n/a	n/a	0.2301
A1(HL)	!A2&A3&!A4	0.0100	n/a	n/a	0.1570
A1(HL)	!A2&A3&A4	0.0100	n/a	n/a	0.1571
A1(HL)	A2&!A3&!A4	0.0100	n/a	n/a	0.0817
A1(HL)	A2&!A3&A4	0.0100	n/a	n/a	0.0816
A1(HL)	A2&A3&!A4	0.0100	n/a	n/a	0.0816
A1(HL)	A2&A3&A4	0.0100	n/a	n/a	0.0816
A2(HL)	!A1&!A3&A4	0.0100	n/a	n/a	0.1508

continues on next page

Table 270 – continued from previous page

A2(HL)	!A1&A3&!A4	0.0100	n/a	n/a	0.0776
A2(HL)	!A1&A3&A4	0.0100	n/a	n/a	0.0776
A2(HL)	A1&!A3&!A4	0.0100	n/a	n/a	0.1190
A2(HL)	A1&!A3&A4	0.0100	n/a	n/a	0.0690
A2(HL)	A1&A3&!A4	0.0100	n/a	n/a	0.0711
A2(HL)	A1&A3&A4	0.0100	n/a	n/a	0.0711
A4(HL)	!A1&!A2&A3	0.0100	n/a	n/a	0.1190
A4(HL)	!A1&A2&!A3	0.0100	n/a	n/a	0.1190
A4(HL)	!A1&A2&A3	0.0100	n/a	n/a	0.1190
A4(HL)	A1&!A2&!A3	0.0100	n/a	n/a	0.1191
A4(HL)	A1&!A2&A3	0.0100	n/a	n/a	0.1190
A4(HL)	A1&A2&!A3	0.0100	n/a	n/a	0.1190
A4(HL)	A1&A2&A3	0.0100	n/a	n/a	0.1190

LEAKAGE POWER

When Condition	Power (nW)
!A1&!A2&!A3&!A4	0.3610
!A1&!A2&!A3&A4	0.4174
!A1&!A2&A3&!A4	0.3475
!A1&!A2&A3&A4	0.3475
!A1&A2&!A3&!A4	0.2770
!A1&A2&!A3&A4	0.2770
!A1&A2&A3&!A4	0.2770
!A1&A2&A3&A4	0.2770
A1&!A2&!A3&!A4	0.2060
A1&!A2&!A3&A4	0.2060
A1&!A2&A3&!A4	0.2060
A1&!A2&A3&A4	0.2060
A1&A2&!A3&!A4	0.2060
A1&A2&!A3&A4	0.2060
A1&A2&A3&!A4	0.2060
A1&A2&A3&A4	0.2060

gf180mcu_fd_sc_mcu9t5v0__sdffq_1

gf180mcu_fd_sc_mcu9t5v0__sdffq_1 symbol

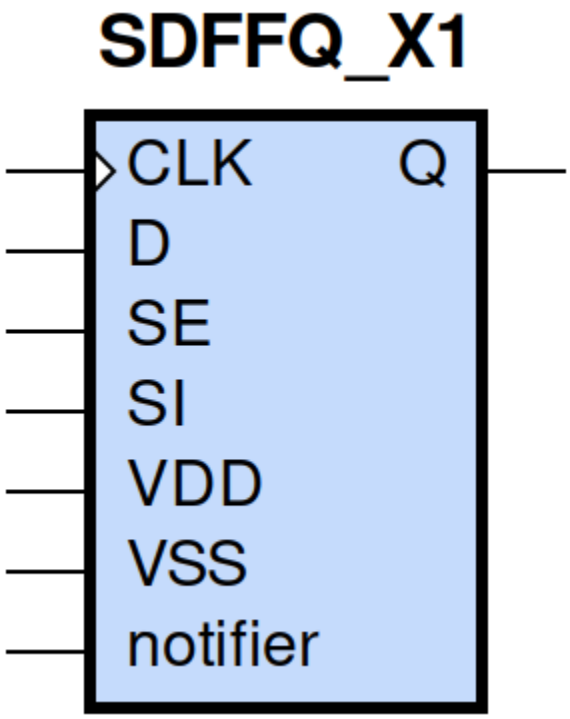

gf180mcu_fd_sc_mcu9t5v0__sdffq_1 schematic

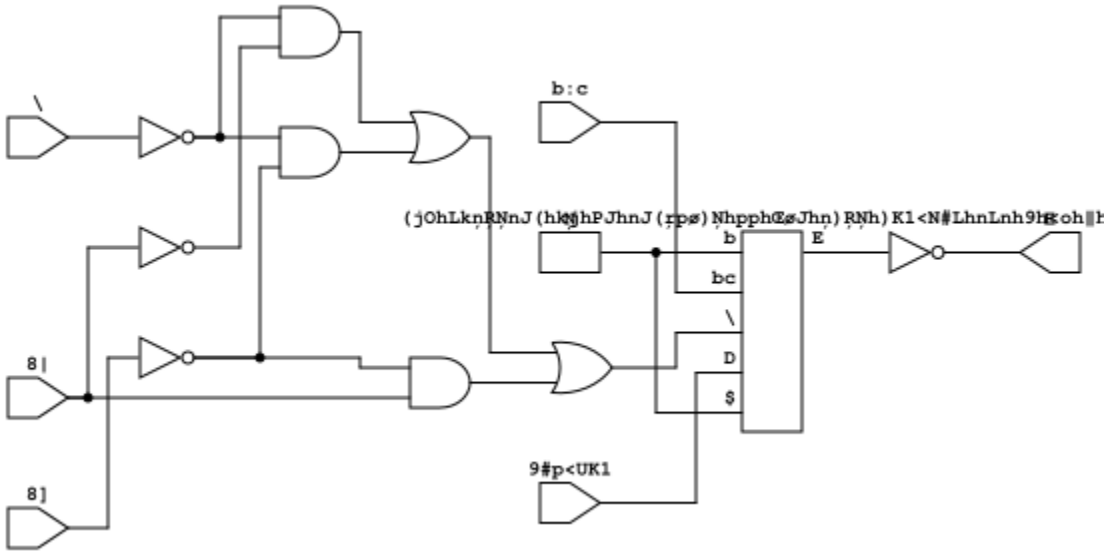

gf180mcu_fd_sc_mcu9t5v0__sdffq_1 layout

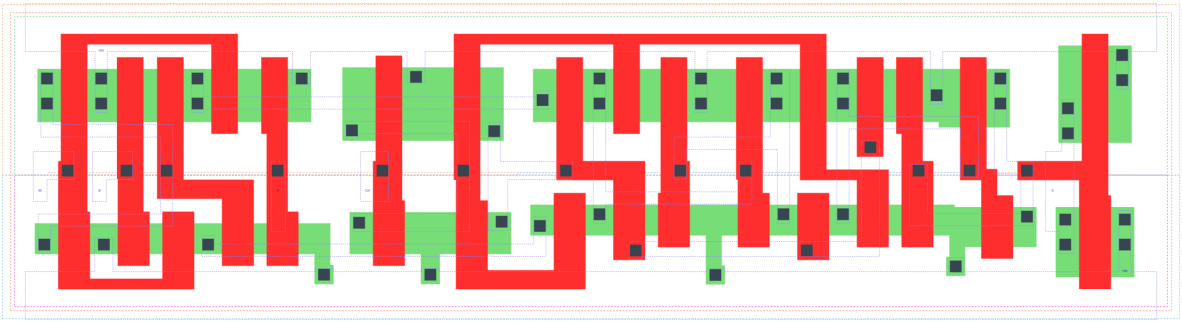

SDFFQ_X1 is a positive edge triggered scan D-type flip flop with 1X drive strength

Attributes

Attribute	Value
area	107.251200 μm^2

TRUTH TABLE

Input				Output
SE	SI	D	CLK	Q
L	X	L	↑	L
L	X	H	↑	H
H	L	X	↑	L
H	H	X	↑	H

FUNCTIONAL SCHEMATIC

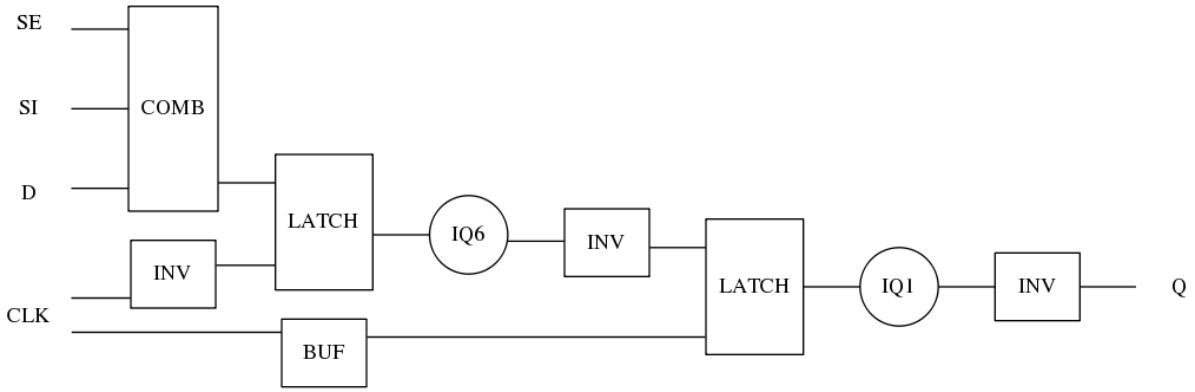

CONSTRAINTS

Constraint Pin	Related Pin	setup(ns)	hold(ns)
SE(LH)	CLK(LH)	0.3780	-0.1720
SE(LH)	CLK(LH)	0.5380	-0.1370
SE(HL)	CLK(LH)	0.4350	-0.0460
SE(HL)	CLK(LH)	0.4980	-0.2920
SI(HL)	CLK(LH)	0.5040	-0.1030
SI(HL)	CLK(LH)	0.5040	-0.1030
SI(LH)	CLK(LH)	0.4240	-0.2180
SI(LH)	CLK(LH)	0.4240	-0.2180
D(HL)	CLK(LH)	0.5040	-0.0970
D(HL)	CLK(LH)	0.5040	-0.1030
D(LH)	CLK(LH)	0.4240	-0.2180
D(LH)	CLK(LH)	0.4240	-0.2180

Constraint Pin	Related Pin	Minimum Pulse Width(ns)
CLK(HLH)	CLK(HL)	0.5950
CLK(HLH)	CLK(HL)	0.5950
CLK(HLH)	CLK(HL)	0.5950
CLK(HLH)	CLK(HL)	0.4980
CLK(HLH)	CLK(HL)	0.4980
CLK(HLH)	CLK(HL)	0.5950
CLK(HLH)	CLK(HL)	0.4980
CLK(HLH)	CLK(HL)	0.4980
CLK(LHL)	CLK(LH)	0.2610
CLK(LHL)	CLK(LH)	0.2610
CLK(LHL)	CLK(LH)	0.2610
CLK(LHL)	CLK(LH)	0.3100
CLK(LHL)	CLK(LH)	0.3100
CLK(LHL)	CLK(LH)	0.2610
CLK(LHL)	CLK(LH)	0.3100
CLK(LHL)	CLK(LH)	0.3100

PIN CAPACITANCE (pf)

Pin	Type	Capacitance (pf)
SE	input	0.0083
SI	input	0.0040
D	input	0.0036
CLK	input	0.0049

DELAY AND OUTPUT TRANSITION TIME corresponding to min slew and load

Input Pin	Output	When Condition	Tin (ns)	Out Load (pf)	Delay (ns)	Tout (ns)
CLK(LH)	Q(HL)	!D&!SE&!SI	0.0100	0.0010	0.5305	0.0371
CLK(LH)	Q(HL)	!D&!SE&SI	0.0100	0.0010	0.5305	0.0371
CLK(LH)	Q(HL)	!D&SE&!SI	0.0100	0.0010	0.5305	0.0371
CLK(LH)	Q(HL)	D&SE&!SI	0.0100	0.0010	0.5305	0.0371
CLK(LH)	Q(LH)	!D&SE&SI	0.0100	0.0010	0.4895	0.0377
CLK(LH)	Q(LH)	D&!SE&!SI	0.0100	0.0010	0.4895	0.0377
CLK(LH)	Q(LH)	D&!SE&SI	0.0100	0.0010	0.4895	0.0377
CLK(LH)	Q(LH)	D&SE&SI	0.0100	0.0010	0.4894	0.0377

DYNAMIC ENERGY

Input Pin	When Condition	Tin (ns)	Output	Out Load (pf)	Energy (uW/MHz)
CLK	!D&!SE&!SI	0.0100	Q(HL)	0.0010	0.6934
CLK	!D&!SE&SI	0.0100	Q(HL)	0.0010	0.6933
CLK	!D&SE&!SI	0.0100	Q(HL)	0.0010	0.6931
CLK	D&SE&!SI	0.0100	Q(HL)	0.0010	0.6930
CLK	!D&SE&SI	0.0100	Q(LH)	0.0010	0.6607
CLK	D&!SE&!SI	0.0100	Q(LH)	0.0010	0.6606
CLK	D&!SE&SI	0.0100	Q(LH)	0.0010	0.6606
CLK	D&SE&SI	0.0100	Q(LH)	0.0010	0.6607
D(HL)	!CLK&!SE&!SI	0.0100	n/a	n/a	0.4257
D(HL)	!CLK&SE&!SI	0.0100	n/a	n/a	0.0324
D(HL)	!CLK&!SE&SI	0.0100	n/a	n/a	0.4257
D(HL)	!CLK&SE&SI	0.0100	n/a	n/a	0.0321
D(HL)	CLK&!SE&!SI	0.0100	n/a	n/a	0.0861
D(HL)	CLK&SE&!SI	0.0100	n/a	n/a	0.0321
D(HL)	CLK&!SE&SI	0.0100	n/a	n/a	0.0861
D(HL)	CLK&SE&SI	0.0100	n/a	n/a	0.0321
SE(LH)	!CLK&!D&!SI	0.0100	n/a	n/a	0.0060
SE(LH)	!CLK&!D&SI	0.0100	n/a	n/a	0.2419
SE(LH)	CLK&!D&!SI	0.0100	n/a	n/a	-0.0003
SE(LH)	CLK&!D&SI	0.0100	n/a	n/a	-0.0076
SE(LH)	!CLK&D&!SI	0.0100	n/a	n/a	0.4025
SE(LH)	!CLK&D&SI	0.0100	n/a	n/a	0.0066
SE(LH)	CLK&D&!SI	0.0100	n/a	n/a	0.0508
SE(LH)	CLK&D&SI	0.0100	n/a	n/a	0.0027
CLK(LH)	!D&!SE&!SI	0.0100	n/a	n/a	0.2693
CLK(LH)	!D&SE&!SI	0.0100	n/a	n/a	0.2694
CLK(LH)	!D&!SE&SI	0.0100	n/a	n/a	0.2693
CLK(LH)	!D&SE&SI	0.0100	n/a	n/a	0.2717
CLK(LH)	D&!SE&!SI	0.0100	n/a	n/a	0.2717
CLK(LH)	D&SE&!SI	0.0100	n/a	n/a	0.2694
CLK(LH)	D&!SE&SI	0.0100	n/a	n/a	0.2715
CLK(LH)	D&SE&SI	0.0100	n/a	n/a	0.2719
SI(LH)	!CLK&!D&!SE	0.0100	n/a	n/a	-0.0315
SI(LH)	!CLK&!D&SE	0.0100	n/a	n/a	0.2396
SI(LH)	CLK&!D&!SE	0.0100	n/a	n/a	-0.0315
SI(LH)	CLK&!D&SE	0.0100	n/a	n/a	-0.0261
SI(LH)	!CLK&D&!SE	0.0100	n/a	n/a	-0.0293
SI(LH)	!CLK&D&SE	0.0100	n/a	n/a	0.2396
SI(LH)	CLK&D&!SE	0.0100	n/a	n/a	-0.0298
SI(LH)	CLK&D&SE	0.0100	n/a	n/a	-0.0261
SE(HL)	!CLK&!D&!SI	0.0100	n/a	n/a	0.1734
SE(HL)	!CLK&!D&SI	0.0100	n/a	n/a	0.5342
SE(HL)	CLK&!D&!SI	0.0100	n/a	n/a	0.1685
SE(HL)	CLK&!D&SI	0.0100	n/a	n/a	0.2101
SE(HL)	!CLK&D&!SI	0.0100	n/a	n/a	0.4457
SE(HL)	!CLK&D&SI	0.0100	n/a	n/a	0.1733
SE(HL)	CLK&D&!SI	0.0100	n/a	n/a	0.1839
SE(HL)	CLK&D&SI	0.0100	n/a	n/a	0.1676
CLK(HL)	!D&!SE&!SI	0.0100	n/a	n/a	0.3825
CLK(HL)	!D&SE&!SI	0.0100	n/a	n/a	0.3828
CLK(HL)	!D&!SE&SI	0.0100	n/a	n/a	0.3825

continues on next page

Table 271 – continued from previous page

CLK(HL)	!D&SE&SI	0.0100	n/a	n/a	0.3799
CLK(HL)	D&!SE&!SI	0.0100	n/a	n/a	0.3800
CLK(HL)	D&SE&!SI	0.0100	n/a	n/a	0.3828
CLK(HL)	D&!SE&SI	0.0100	n/a	n/a	0.3889
CLK(HL)	D&SE&SI	0.0100	n/a	n/a	0.3888
SI(HL)	!CLK&!D&!SE	0.0100	n/a	n/a	0.0326
SI(HL)	!CLK&!D&SE	0.0100	n/a	n/a	0.4451
SI(HL)	CLK&!D&!SE	0.0100	n/a	n/a	0.0324
SI(HL)	CLK&!D&SE	0.0100	n/a	n/a	0.0874
SI(HL)	!CLK&D&!SE	0.0100	n/a	n/a	0.0321
SI(HL)	!CLK&D&SE	0.0100	n/a	n/a	0.4450
SI(HL)	CLK&D&!SE	0.0100	n/a	n/a	0.0320
SI(HL)	CLK&D&SE	0.0100	n/a	n/a	0.0874
D(LH)	!CLK&!SE&!SI	0.0100	n/a	n/a	0.2629
D(LH)	!CLK&SE&!SI	0.0100	n/a	n/a	-0.0311
D(LH)	!CLK&!SE&SI	0.0100	n/a	n/a	0.2629
D(LH)	!CLK&SE&SI	0.0100	n/a	n/a	-0.0285
D(LH)	CLK&!SE&!SI	0.0100	n/a	n/a	-0.0096
D(LH)	CLK&SE&!SI	0.0100	n/a	n/a	-0.0311
D(LH)	CLK&!SE&SI	0.0100	n/a	n/a	-0.0096
D(LH)	CLK&SE&SI	0.0100	n/a	n/a	-0.0290

LEAKAGE POWER

When Condition	Power (nW)
!CLK&!D&!SE&!SI	0.4562
!CLK&!D&!SE&SI	0.4564
!CLK&!D&SE&!SI	0.4676
!CLK&D&SE&!SI	0.4678
!CLK&!D&SE&SI	0.4747
!CLK&D&!SE&!SI	0.4755
!CLK&D&!SE&SI	0.5146
!CLK&D&SE&SI	0.5138
CLK&!D&!SE&!SI	0.4233
CLK&!D&!SE&SI	0.4233
CLK&!D&SE&!SI	0.4146
CLK&D&SE&!SI	0.4146
CLK&!D&SE&SI	0.4843
CLK&D&!SE&!SI	0.4791
CLK&D&!SE&SI	0.5808
CLK&D&SE&SI	0.5859

gf180mcu_fd_sc_mcu9t5v0__sdffq_2

gf180mcu_fd_sc_mcu9t5v0__sdffq_2 symbol

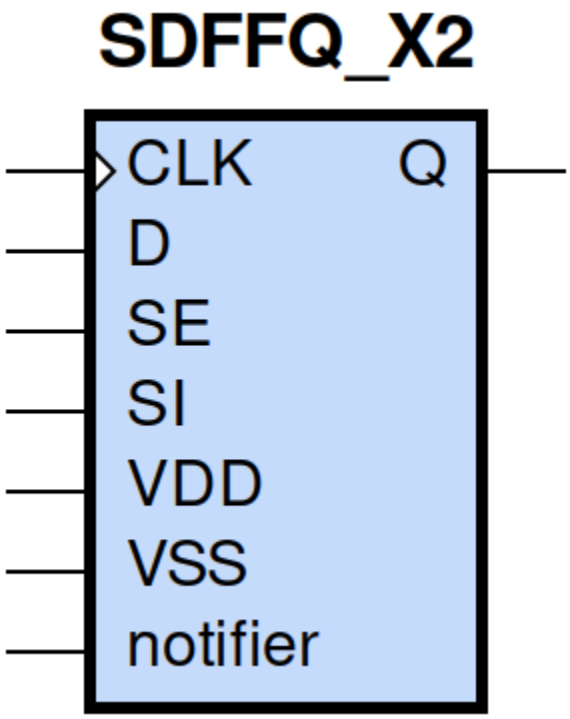

gf180mcu_fd_sc_mcu9t5v0__sdffq_2 schematic

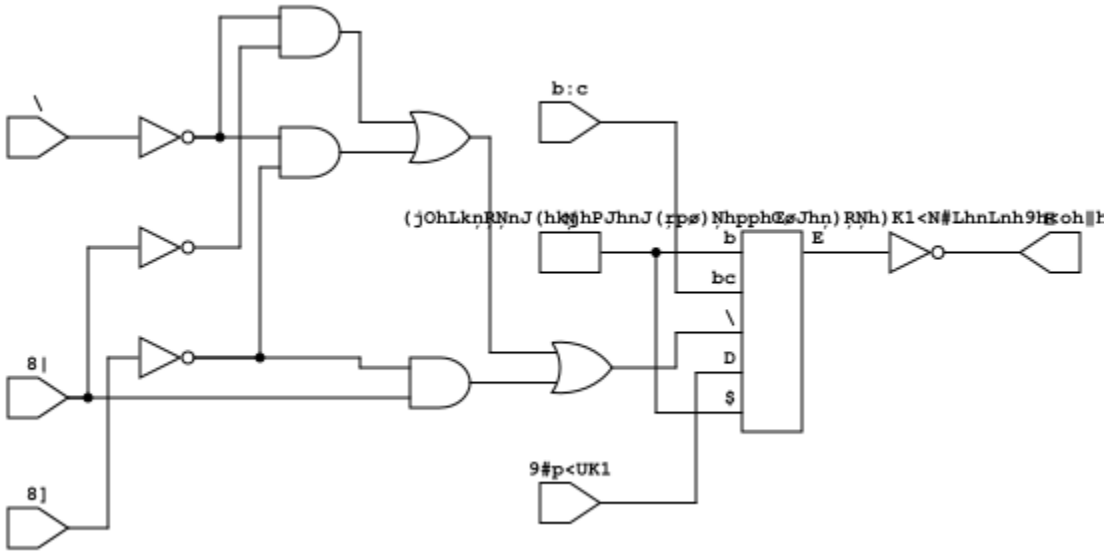

gf180mcu_fd_sc_mcu9t5v0__sdffq_2 layout

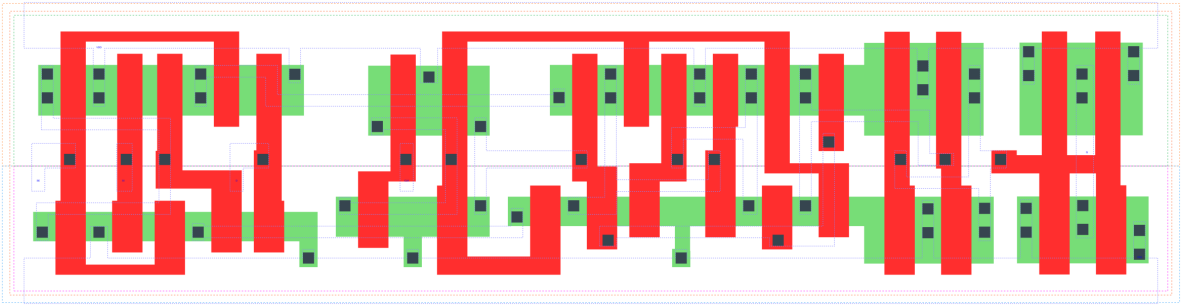

SDFFQ_X2 is a positive edge triggered scan D-type flip flop with 2X drive strength

Attributes

Attribute	Value
area	112.896000 μm^2

TRUTH TABLE

Input				Output
SE	SI	D	CLK	Q
L	X	L	↑	L
L	X	H	↑	H
H	L	X	↑	L
H	H	X	↑	H

FUNCTIONAL SCHEMATIC

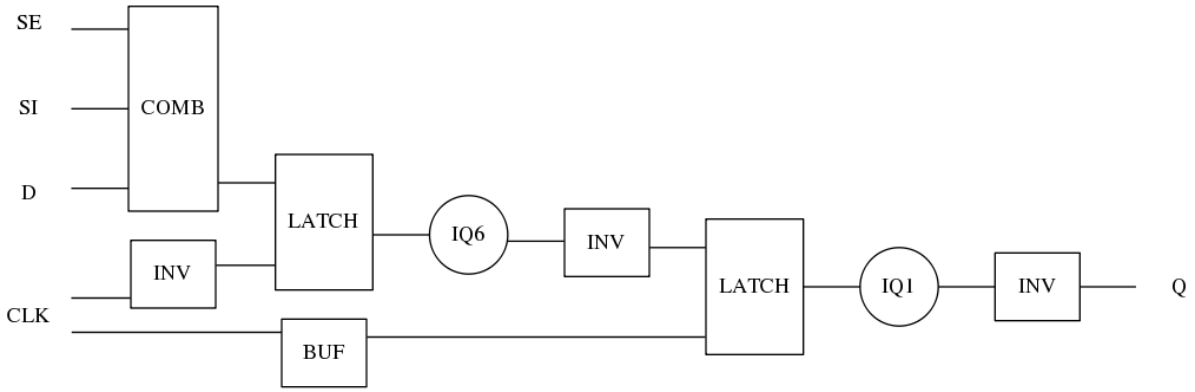

CONSTRAINTS

Constraint Pin	Related Pin	setup(ns)	hold(ns)
SE(LH)	CLK(LH)	0.3840	-0.1600
SE(LH)	CLK(LH)	0.5500	-0.1430
SE(HL)	CLK(LH)	0.4470	-0.0460
SE(HL)	CLK(LH)	0.4980	-0.2810
SI(HL)	CLK(LH)	0.5150	-0.1030
SI(HL)	CLK(LH)	0.5150	-0.1030
SI(LH)	CLK(LH)	0.4290	-0.2060
SI(LH)	CLK(LH)	0.4290	-0.2060
D(HL)	CLK(LH)	0.5150	-0.1030
D(HL)	CLK(LH)	0.5150	-0.1030
D(LH)	CLK(LH)	0.4350	-0.2120
D(LH)	CLK(LH)	0.4350	-0.2120

Constraint Pin	Related Pin	Minimum Pulse Width(ns)
CLK(HLH)	CLK(HL)	0.6010
CLK(HLH)	CLK(HL)	0.6010
CLK(HLH)	CLK(HL)	0.6010
CLK(HLH)	CLK(HL)	0.4980
CLK(HLH)	CLK(HL)	0.5040
CLK(HLH)	CLK(HL)	0.6010
CLK(HLH)	CLK(HL)	0.5040
CLK(HLH)	CLK(HL)	0.4980
CLK(LHL)	CLK(LH)	0.3000
CLK(LHL)	CLK(LH)	0.2900
CLK(LHL)	CLK(LH)	0.3000
CLK(LHL)	CLK(LH)	0.3680
CLK(LHL)	CLK(LH)	0.3680
CLK(LHL)	CLK(LH)	0.3000
CLK(LHL)	CLK(LH)	0.3680
CLK(LHL)	CLK(LH)	0.3680

PIN CAPACITANCE (pf)

Pin	Type	Capacitance (pf)
SE	input	0.0083
SI	input	0.0038
D	input	0.0037
CLK	input	0.0050

DELAY AND OUTPUT TRANSITION TIME corresponding to min slew and load

Input Pin	Output	When Condition	Tin (ns)	Out Load (pf)	Delay (ns)	Tout (ns)
CLK(LH)	Q(HL)	!D&!SE&!SI	0.0100	0.0010	0.5511	0.0318
CLK(LH)	Q(HL)	!D&!SE&SI	0.0100	0.0010	0.5511	0.0318
CLK(LH)	Q(HL)	!D&SE&!SI	0.0100	0.0010	0.5511	0.0318
CLK(LH)	Q(HL)	D&SE&!SI	0.0100	0.0010	0.5511	0.0318
CLK(LH)	Q(LH)	!D&SE&SI	0.0100	0.0010	0.5154	0.0305
CLK(LH)	Q(LH)	D&!SE&!SI	0.0100	0.0010	0.5154	0.0305
CLK(LH)	Q(LH)	D&!SE&SI	0.0100	0.0010	0.5154	0.0305
CLK(LH)	Q(LH)	D&SE&SI	0.0100	0.0010	0.5154	0.0307

DYNAMIC ENERGY

Input Pin	When Condition	Tin (ns)	Output	Out Load (pf)	Energy (uW/MHz)
CLK	!D&!SE&!SI	0.0100	Q(HL)	0.0010	0.9534
CLK	!D&!SE&SI	0.0100	Q(HL)	0.0010	0.9531
CLK	!D&SE&!SI	0.0100	Q(HL)	0.0010	0.9525
CLK	D&SE&!SI	0.0100	Q(HL)	0.0010	0.9525
CLK	!D&SE&SI	0.0100	Q(LH)	0.0010	0.9003
CLK	D&!SE&!SI	0.0100	Q(LH)	0.0010	0.9008
CLK	D&!SE&SI	0.0100	Q(LH)	0.0010	0.9008
CLK	D&SE&SI	0.0100	Q(LH)	0.0010	0.9010
D(HL)	!CLK&!SE&!SI	0.0100	n/a	n/a	0.4262
D(HL)	!CLK&SE&!SI	0.0100	n/a	n/a	0.0324
D(HL)	!CLK&!SE&SI	0.0100	n/a	n/a	0.4262
D(HL)	!CLK&SE&SI	0.0100	n/a	n/a	0.0320
D(HL)	CLK&!SE&!SI	0.0100	n/a	n/a	0.0877
D(HL)	CLK&SE&!SI	0.0100	n/a	n/a	0.0321
D(HL)	CLK&!SE&SI	0.0100	n/a	n/a	0.0877
D(HL)	CLK&SE&SI	0.0100	n/a	n/a	0.0321
SE(LH)	!CLK&!D&!SI	0.0100	n/a	n/a	0.0061
SE(LH)	!CLK&!D&SI	0.0100	n/a	n/a	0.2469
SE(LH)	CLK&!D&!SI	0.0100	n/a	n/a	-0.0003
SE(LH)	CLK&!D&SI	0.0100	n/a	n/a	-0.0075
SE(LH)	!CLK&D&!SI	0.0100	n/a	n/a	0.4031
SE(LH)	!CLK&D&SI	0.0100	n/a	n/a	0.0072
SE(LH)	CLK&D&!SI	0.0100	n/a	n/a	0.0524
SE(LH)	CLK&D&SI	0.0100	n/a	n/a	0.0031
CLK(LH)	!D&!SE&!SI	0.0100	n/a	n/a	0.2596
CLK(LH)	!D&SE&!SI	0.0100	n/a	n/a	0.2594
CLK(LH)	!D&!SE&SI	0.0100	n/a	n/a	0.2594
CLK(LH)	!D&SE&SI	0.0100	n/a	n/a	0.2619
CLK(LH)	D&!SE&!SI	0.0100	n/a	n/a	0.2618
CLK(LH)	D&SE&!SI	0.0100	n/a	n/a	0.2593
CLK(LH)	D&!SE&SI	0.0100	n/a	n/a	0.2618
CLK(LH)	D&SE&SI	0.0100	n/a	n/a	0.2619
SI(LH)	!CLK&!D&!SE	0.0100	n/a	n/a	-0.0315
SI(LH)	!CLK&!D&SE	0.0100	n/a	n/a	0.2446
SI(LH)	CLK&!D&!SE	0.0100	n/a	n/a	-0.0315
SI(LH)	CLK&!D&SE	0.0100	n/a	n/a	-0.0261
SI(LH)	!CLK&D&!SE	0.0100	n/a	n/a	-0.0293
SI(LH)	!CLK&D&SE	0.0100	n/a	n/a	0.2447
SI(LH)	CLK&D&!SE	0.0100	n/a	n/a	-0.0297
SI(LH)	CLK&D&SE	0.0100	n/a	n/a	-0.0261
SE(HL)	!CLK&!D&!SI	0.0100	n/a	n/a	0.1720
SE(HL)	!CLK&!D&SI	0.0100	n/a	n/a	0.5330
SE(HL)	CLK&!D&!SI	0.0100	n/a	n/a	0.1669
SE(HL)	CLK&!D&SI	0.0100	n/a	n/a	0.2098
SE(HL)	!CLK&D&!SI	0.0100	n/a	n/a	0.4465
SE(HL)	!CLK&D&SI	0.0100	n/a	n/a	0.1699
SE(HL)	CLK&D&!SI	0.0100	n/a	n/a	0.1822
SE(HL)	CLK&D&SI	0.0100	n/a	n/a	0.1651
CLK(HL)	!D&!SE&!SI	0.0100	n/a	n/a	0.3820
CLK(HL)	!D&SE&!SI	0.0100	n/a	n/a	0.4177
CLK(HL)	!D&!SE&SI	0.0100	n/a	n/a	0.3820

continues on next page

Table 272 – continued from previous page

CLK(HL)	!D&SE&SI	0.0100	n/a	n/a	0.4080
CLK(HL)	D&!SE&!SI	0.0100	n/a	n/a	0.3796
CLK(HL)	D&SE&!SI	0.0100	n/a	n/a	0.3822
CLK(HL)	D&!SE&SI	0.0100	n/a	n/a	0.4081
CLK(HL)	D&SE&SI	0.0100	n/a	n/a	0.4080
SI(HL)	!CLK&!D&!SE	0.0100	n/a	n/a	0.0326
SI(HL)	!CLK&!D&SE	0.0100	n/a	n/a	0.4455
SI(HL)	CLK&!D&!SE	0.0100	n/a	n/a	0.0324
SI(HL)	CLK&!D&SE	0.0100	n/a	n/a	0.0890
SI(HL)	!CLK&D&!SE	0.0100	n/a	n/a	0.0321
SI(HL)	!CLK&D&SE	0.0100	n/a	n/a	0.4455
SI(HL)	CLK&D&!SE	0.0100	n/a	n/a	0.0321
SI(HL)	CLK&D&SE	0.0100	n/a	n/a	0.0890
D(LH)	!CLK&!SE&!SI	0.0100	n/a	n/a	0.2656
D(LH)	!CLK&SE&!SI	0.0100	n/a	n/a	-0.0311
D(LH)	!CLK&!SE&SI	0.0100	n/a	n/a	0.2655
D(LH)	!CLK&SE&SI	0.0100	n/a	n/a	-0.0286
D(LH)	CLK&!SE&!SI	0.0100	n/a	n/a	-0.0095
D(LH)	CLK&SE&!SI	0.0100	n/a	n/a	-0.0310
D(LH)	CLK&!SE&SI	0.0100	n/a	n/a	-0.0095
D(LH)	CLK&SE&SI	0.0100	n/a	n/a	-0.0291

LEAKAGE POWER

When Condition	Power (nW)
!CLK&!D&!SE&!SI	0.4835
!CLK&!D&!SE&SI	0.4837
!CLK&!D&SE&!SI	0.6566
!CLK&D&SE&!SI	0.4953
!CLK&!D&SE&SI	0.6314
!CLK&D&!SE&!SI	0.4979
!CLK&D&!SE&SI	0.6280
!CLK&D&SE&SI	0.6314
CLK&!D&!SE&!SI	0.4520
CLK&!D&!SE&SI	0.4520
CLK&!D&SE&!SI	0.6604
CLK&D&SE&!SI	0.4428
CLK&!D&SE&SI	0.7294
CLK&D&!SE&!SI	0.4941
CLK&D&!SE&SI	0.7254
CLK&D&SE&SI	0.7294

gf180mcu_fd_sc_mcu9t5v0__sdffq_4

gf180mcu_fd_sc_mcu9t5v0__sdffq_4 symbol

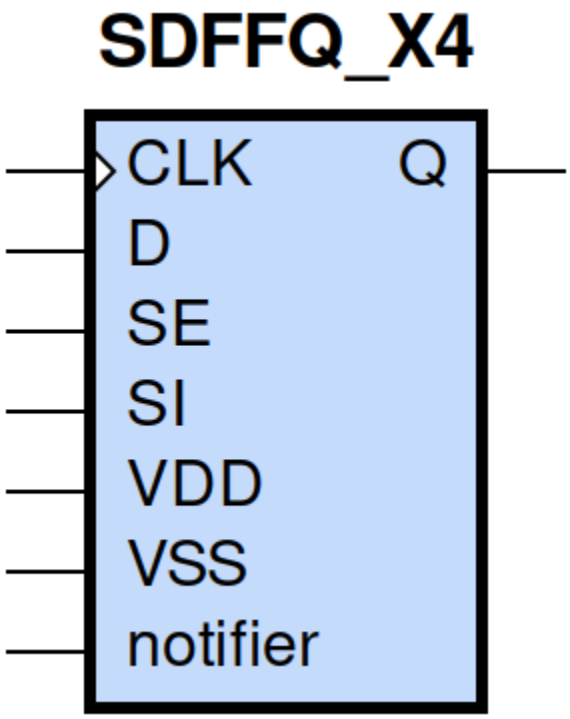

gf180mcu_fd_sc_mcu9t5v0__sdffq_4 schematic

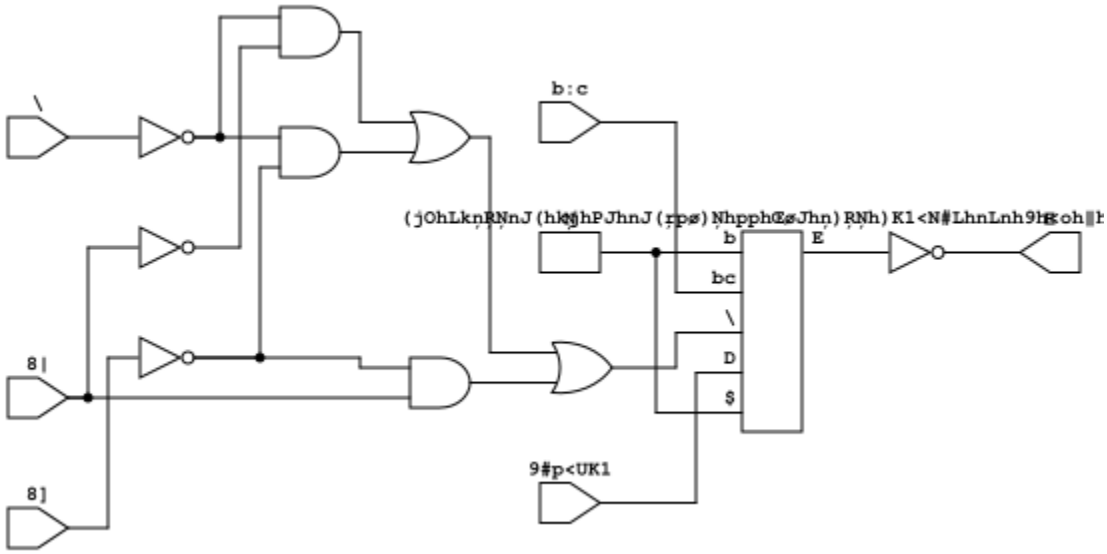

gf180mcu_fd_sc_mcu9t5v0__sdffq_4 layout

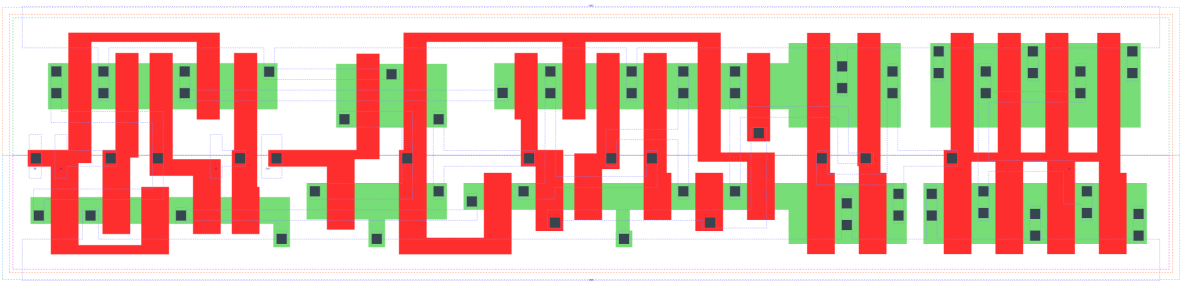

SDFFQ_X4 is a positive edge triggered scan D-type flip flop with 4X drive strength

Attributes

Attribute	Value
area	124.185600 μm^2

TRUTH TABLE

Input				Output
SE	SI	D	CLK	Q
L	X	L	↑	L
L	X	H	↑	H
H	L	X	↑	L
H	H	X	↑	H

FUNCTIONAL SCHEMATIC

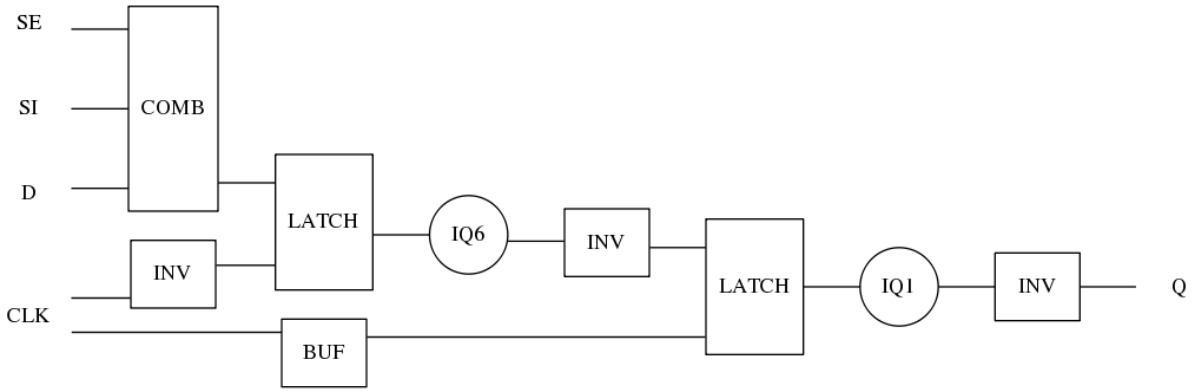

CONSTRAINTS

Constraint Pin	Related Pin	setup(ns)	hold(ns)
SE(LH)	CLK(LH)	0.3840	-0.1660
SE(LH)	CLK(LH)	0.5500	-0.1370
SE(HL)	CLK(LH)	0.4410	-0.0400
SE(HL)	CLK(LH)	0.5040	-0.2810
SI(HL)	CLK(LH)	0.5100	-0.0970
SI(HL)	CLK(LH)	0.5100	-0.0970
SI(LH)	CLK(LH)	0.4290	-0.2060
SI(LH)	CLK(LH)	0.4290	-0.2060
D(HL)	CLK(LH)	0.5100	-0.0970
D(HL)	CLK(LH)	0.5100	-0.0970
D(LH)	CLK(LH)	0.4290	-0.2120
D(LH)	CLK(LH)	0.4350	-0.2120

Constraint Pin	Related Pin	Minimum Pulse Width(ns)
CLK(HLH)	CLK(HL)	0.5950
CLK(HLH)	CLK(HL)	0.5950
CLK(HLH)	CLK(HL)	0.5950
CLK(HLH)	CLK(HL)	0.4980
CLK(HLH)	CLK(HL)	0.4980
CLK(HLH)	CLK(HL)	0.6010
CLK(HLH)	CLK(HL)	0.4980
CLK(HLH)	CLK(HL)	0.4980
CLK(LHL)	CLK(LH)	0.3290
CLK(LHL)	CLK(LH)	0.3290
CLK(LHL)	CLK(LH)	0.3290
CLK(LHL)	CLK(LH)	0.4070
CLK(LHL)	CLK(LH)	0.4070
CLK(LHL)	CLK(LH)	0.3290
CLK(LHL)	CLK(LH)	0.4070
CLK(LHL)	CLK(LH)	0.4070

PIN CAPACITANCE (pf)

Pin	Type	Capacitance (pf)
SE	input	0.0084
SI	input	0.0041
D	input	0.0038
CLK	input	0.0053

DELAY AND OUTPUT TRANSITION TIME corresponding to min slew and load

Input Pin	Output	When Condition	Tin (ns)	Out Load (pf)	Delay (ns)	Tout (ns)
CLK(LH)	Q(HL)	!D&!SE&!SI	0.0100	0.0010	0.6146	0.0411
CLK(LH)	Q(HL)	!D&!SE&SI	0.0100	0.0010	0.6146	0.0411
CLK(LH)	Q(HL)	!D&SE&!SI	0.0100	0.0010	0.6146	0.0411
CLK(LH)	Q(HL)	D&SE&!SI	0.0100	0.0010	0.6146	0.0411
CLK(LH)	Q(LH)	!D&SE&SI	0.0100	0.0010	0.5798	0.0354
CLK(LH)	Q(LH)	D&!SE&!SI	0.0100	0.0010	0.5798	0.0353
CLK(LH)	Q(LH)	D&!SE&SI	0.0100	0.0010	0.5796	0.0353
CLK(LH)	Q(LH)	D&SE&SI	0.0100	0.0010	0.5798	0.0353

DYNAMIC ENERGY

Input Pin	When Condition	Tin (ns)	Output	Out Load (pf)	Energy (uW/MHz)
CLK	!D&!SE&!SI	0.0100	Q(HL)	0.0010	1.4642
CLK	!D&!SE&SI	0.0100	Q(HL)	0.0010	1.4642
CLK	!D&SE&!SI	0.0100	Q(HL)	0.0010	1.4638
CLK	D&SE&!SI	0.0100	Q(HL)	0.0010	1.4638
CLK	!D&SE&SI	0.0100	Q(LH)	0.0010	1.2996
CLK	D&!SE&!SI	0.0100	Q(LH)	0.0010	1.2991
CLK	D&!SE&SI	0.0100	Q(LH)	0.0010	1.2990
CLK	D&SE&SI	0.0100	Q(LH)	0.0010	1.2993
D(HL)	!CLK&!SE&!SI	0.0100	n/a	n/a	0.4280
D(HL)	!CLK&SE&!SI	0.0100	n/a	n/a	0.0325
D(HL)	!CLK&!SE&SI	0.0100	n/a	n/a	0.4279
D(HL)	!CLK&SE&SI	0.0100	n/a	n/a	0.0321
D(HL)	CLK&!SE&!SI	0.0100	n/a	n/a	0.0885
D(HL)	CLK&SE&!SI	0.0100	n/a	n/a	0.0321
D(HL)	CLK&!SE&SI	0.0100	n/a	n/a	0.0885
D(HL)	CLK&SE&SI	0.0100	n/a	n/a	0.0321
SE(LH)	!CLK&!D&!SI	0.0100	n/a	n/a	0.0062
SE(LH)	!CLK&!D&SI	0.0100	n/a	n/a	0.2421
SE(LH)	CLK&!D&!SI	0.0100	n/a	n/a	-0.0003
SE(LH)	CLK&!D&SI	0.0100	n/a	n/a	-0.0077
SE(LH)	!CLK&D&!SI	0.0100	n/a	n/a	0.4047
SE(LH)	!CLK&D&SI	0.0100	n/a	n/a	0.0066
SE(LH)	CLK&D&!SI	0.0100	n/a	n/a	0.0532
SE(LH)	CLK&D&SI	0.0100	n/a	n/a	0.0029
CLK(LH)	!D&!SE&!SI	0.0100	n/a	n/a	0.2605
CLK(LH)	!D&SE&!SI	0.0100	n/a	n/a	0.2603
CLK(LH)	!D&!SE&SI	0.0100	n/a	n/a	0.2604
CLK(LH)	!D&SE&SI	0.0100	n/a	n/a	0.2629
CLK(LH)	D&!SE&!SI	0.0100	n/a	n/a	0.2628
CLK(LH)	D&SE&!SI	0.0100	n/a	n/a	0.2601
CLK(LH)	D&!SE&SI	0.0100	n/a	n/a	0.2625
CLK(LH)	D&SE&SI	0.0100	n/a	n/a	0.2627
SI(LH)	!CLK&!D&!SE	0.0100	n/a	n/a	-0.0315
SI(LH)	!CLK&!D&SE	0.0100	n/a	n/a	0.2397
SI(LH)	CLK&!D&!SE	0.0100	n/a	n/a	-0.0316
SI(LH)	CLK&!D&SE	0.0100	n/a	n/a	-0.0260
SI(LH)	!CLK&D&!SE	0.0100	n/a	n/a	-0.0292
SI(LH)	!CLK&D&SE	0.0100	n/a	n/a	0.2397
SI(LH)	CLK&D&!SE	0.0100	n/a	n/a	-0.0297
SI(LH)	CLK&D&SE	0.0100	n/a	n/a	-0.0260
SE(HL)	!CLK&!D&!SI	0.0100	n/a	n/a	0.1715
SE(HL)	!CLK&!D&SI	0.0100	n/a	n/a	0.5342
SE(HL)	CLK&!D&!SI	0.0100	n/a	n/a	0.1666
SE(HL)	CLK&!D&SI	0.0100	n/a	n/a	0.2102
SE(HL)	!CLK&D&!SI	0.0100	n/a	n/a	0.4418
SE(HL)	!CLK&D&SI	0.0100	n/a	n/a	0.1693
SE(HL)	CLK&D&!SI	0.0100	n/a	n/a	0.1819
SE(HL)	CLK&D&SI	0.0100	n/a	n/a	0.1646
CLK(HL)	!D&!SE&!SI	0.0100	n/a	n/a	0.4135
CLK(HL)	!D&SE&!SI	0.0100	n/a	n/a	0.3793
CLK(HL)	!D&!SE&SI	0.0100	n/a	n/a	0.4135

continues on next page

Table 273 – continued from previous page

CLK(HL)	!D&SE&SI	0.0100	n/a	n/a	0.4048
CLK(HL)	D&!SE&!SI	0.0100	n/a	n/a	0.4050
CLK(HL)	D&SE&!SI	0.0100	n/a	n/a	0.4137
CLK(HL)	D&!SE&SI	0.0100	n/a	n/a	0.4050
CLK(HL)	D&SE&SI	0.0100	n/a	n/a	0.4048
SI(HL)	!CLK&!D&!SE	0.0100	n/a	n/a	0.0327
SI(HL)	!CLK&!D&SE	0.0100	n/a	n/a	0.4471
SI(HL)	CLK&!D&!SE	0.0100	n/a	n/a	0.0324
SI(HL)	CLK&!D&SE	0.0100	n/a	n/a	0.0896
SI(HL)	!CLK&D&!SE	0.0100	n/a	n/a	0.0321
SI(HL)	!CLK&D&SE	0.0100	n/a	n/a	0.4471
SI(HL)	CLK&D&!SE	0.0100	n/a	n/a	0.0321
SI(HL)	CLK&D&SE	0.0100	n/a	n/a	0.0896
D(LH)	!CLK&!SE&!SI	0.0100	n/a	n/a	0.2610
D(LH)	!CLK&SE&!SI	0.0100	n/a	n/a	-0.0311
D(LH)	!CLK&!SE&SI	0.0100	n/a	n/a	0.2610
D(LH)	!CLK&SE&SI	0.0100	n/a	n/a	-0.0286
D(LH)	CLK&!SE&!SI	0.0100	n/a	n/a	-0.0093
D(LH)	CLK&SE&!SI	0.0100	n/a	n/a	-0.0311
D(LH)	CLK&!SE&SI	0.0100	n/a	n/a	-0.0093
D(LH)	CLK&SE&SI	0.0100	n/a	n/a	-0.0290

LEAKAGE POWER

When Condition	Power (nW)
!CLK&!D&!SE&!SI	0.6987
!CLK&!D&!SE&SI	0.6989
!CLK&!D&SE&!SI	0.5488
!CLK&D&SE&!SI	0.7105
!CLK&!D&SE&SI	0.6824
!CLK&D&!SE&!SI	0.6797
!CLK&D&!SE&SI	0.6797
!CLK&D&SE&SI	0.6824
CLK&!D&!SE&!SI	0.6247
CLK&!D&!SE&SI	0.6253
CLK&!D&SE&!SI	0.4961
CLK&D&SE&!SI	0.6161
CLK&!D&SE&SI	0.7788
CLK&D&!SE&!SI	0.7746
CLK&D&!SE&SI	0.7746
CLK&D&SE&SI	0.7788

gf180mcu_fd_sc_mcu9t5v0__sdffrnq_1

gf180mcu_fd_sc_mcu9t5v0__sdffrnq_1 symbol

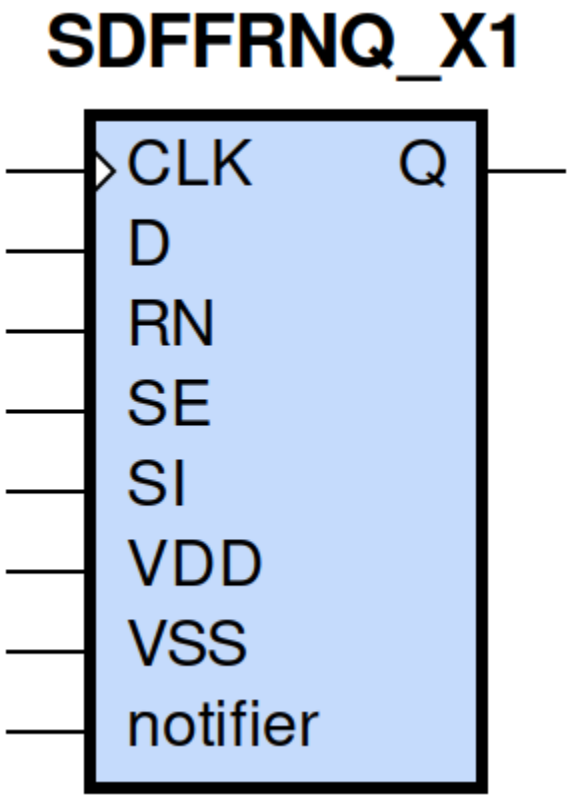

gf180mcu_fd_sc_mcu9t5v0__sdffrnq_1 schematic

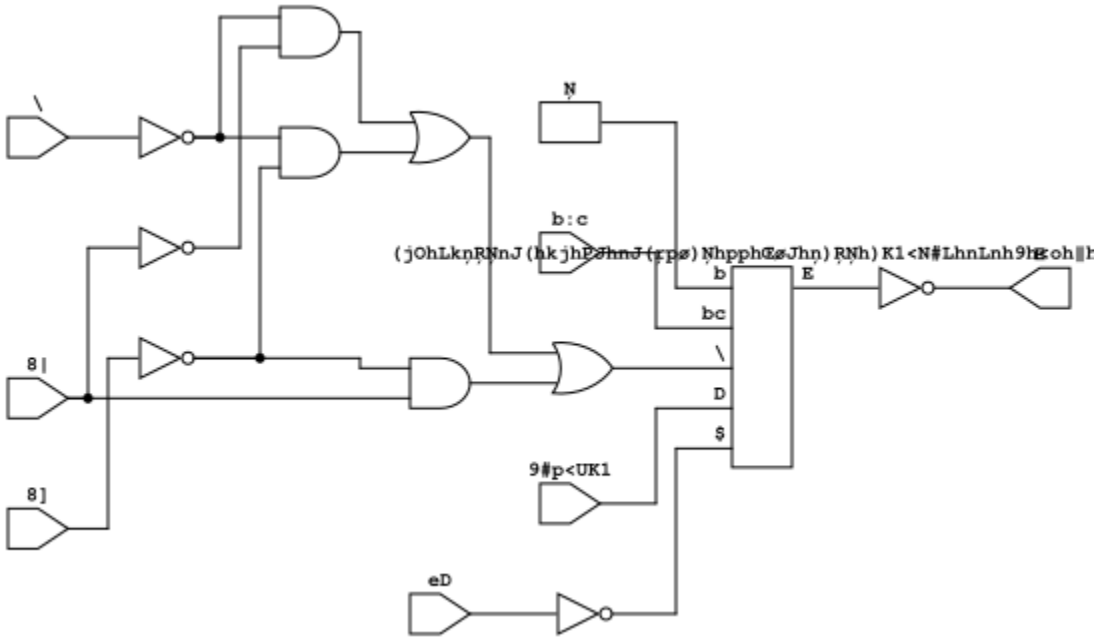

gf180mcu_fd_sc_mcu9t5v0__sdffrnq_1 layout

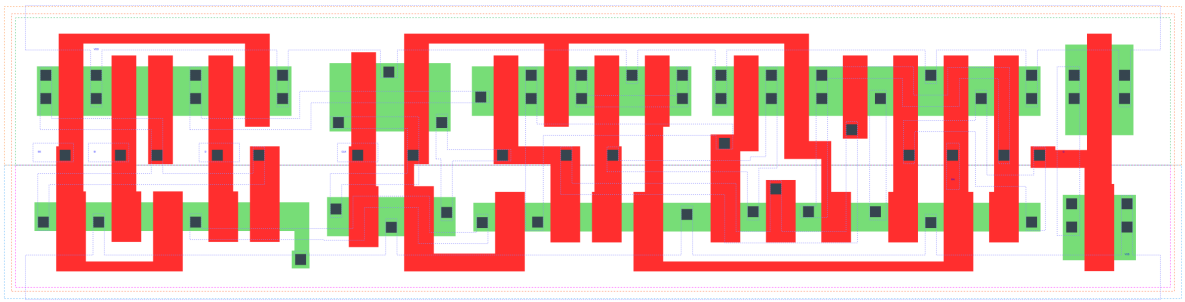

SDFFRNQ_X1 is a positive edge triggered scan D-type flip flop with active low reset and 1X drive strength

Attributes

Attribute	Value
area	115.718400 μm^2

TRUTH TABLE

Input					Output
RN	SE	SI	D	CLK	Q
H	L	X	L	↑	L
H	L	X	H	↑	H
H	H	L	X	↑	L
H	H	H	X	↑	H
L	X	X	X	X	L

FUNCTIONAL SCHEMATIC

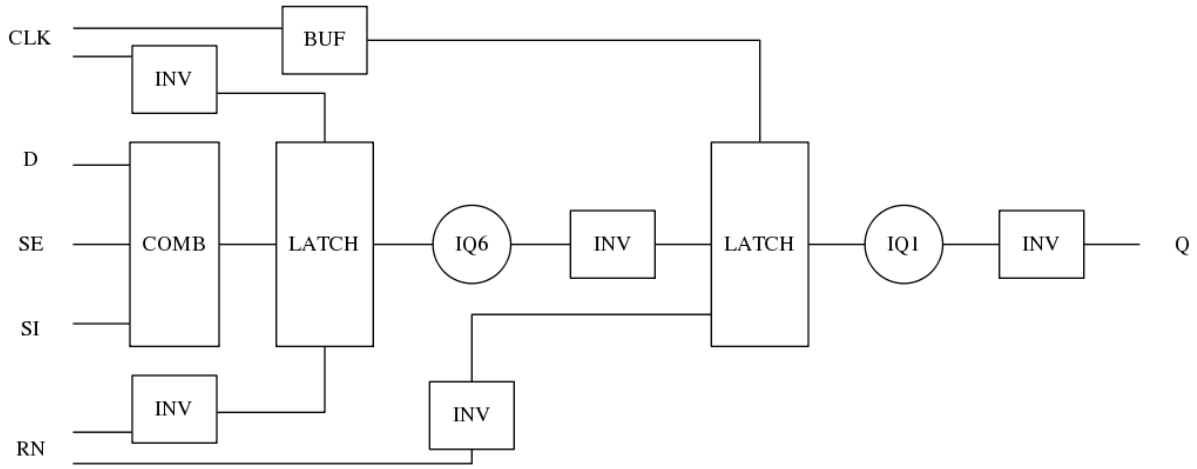

CONSTRAINTS

Constraint Pin	Related Pin	setup(ns)	hold(ns)
SE(LH)	CLK(LH)	0.4580	-0.2120
SE(LH)	CLK(LH)	0.6240	-0.0970
SE(HL)	CLK(LH)	0.5150	-0.0630
SE(HL)	CLK(LH)	0.5320	-0.3030
SI(HL)	CLK(LH)	0.5900	-0.0920
SI(HL)	CLK(LH)	0.5950	-0.0630
SI(LH)	CLK(LH)	0.5100	-0.2580
SI(LH)	CLK(LH)	0.4980	-0.2520
D(HL)	CLK(LH)	0.4980	-0.0460
D(HL)	CLK(LH)	0.4980	-0.0460
D(LH)	CLK(LH)	0.4290	-0.2000
D(LH)	CLK(LH)	0.4290	-0.2000

Constraint Pin	Related Pin	recovery(ns)	removal(ns)
RN(LH)	CLK(LH)	-0.1890	0.3320
RN(LH)	CLK(LH)	-0.1890	0.3320
RN(LH)	CLK(LH)	-0.1890	0.3320
RN(LH)	CLK(LH)	-0.1890	0.3320

Constraint Pin	Related Pin	Minimum Pulse Width(ns)
CLK(HLH)	CLK(HL)	0.6070
CLK(HLH)	CLK(HL)	0.6320
CLK(HLH)	CLK(HL)	0.6070
CLK(HLH)	CLK(HL)	0.5590
CLK(HLH)	CLK(HL)	0.4850
CLK(HLH)	CLK(HL)	0.6930
CLK(HLH)	CLK(HL)	0.4850
CLK(HLH)	CLK(HL)	0.5280
CLK(LHL)	CLK(LH)	0.3390
CLK(LHL)	CLK(LH)	0.3390
CLK(LHL)	CLK(LH)	0.3390
CLK(LHL)	CLK(LH)	0.3780
CLK(LHL)	CLK(LH)	0.3780
CLK(LHL)	CLK(LH)	0.3390
CLK(LHL)	CLK(LH)	0.3780
CLK(LHL)	CLK(LH)	0.3780
RN(HLH)	RN(HL)	0.3190
RN(HLH)	RN(HL)	0.3190
RN(HLH)	RN(HL)	0.3190
RN(HLH)	RN(HL)	0.3190
RN(HLH)	RN(HL)	0.3580
RN(HLH)	RN(HL)	0.3580
RN(HLH)	RN(HL)	0.3580
RN(HLH)	RN(HL)	0.3580
RN(HLH)	RN(HL)	0.3190
RN(HLH)	RN(HL)	0.3190
RN(HLH)	RN(HL)	0.3190
RN(HLH)	RN(HL)	0.3580
RN(HLH)	RN(HL)	0.3580
RN(HLH)	RN(HL)	0.3580
RN(HLH)	RN(HL)	0.3580
RN(HLH)	RN(HL)	0.3190

PIN CAPACITANCE (pf)

Pin	Type	Capacitance (pf)
SE	input	0.0084
SI	input	0.0039
D	input	0.0039
CLK	input	0.0050
RN	input	0.0080

DELAY AND OUTPUT TRANSITION TIME corresponding to min slew and load

Input Pin	Output	When Condition	Tin (ns)	Out Load (pf)	Delay (ns)	Tout (ns)
CLK(LH)	Q(HL)	!D&RN&!SE&!SI	0.0100	0.0010	0.5590	0.0415
CLK(LH)	Q(HL)	!D&RN&!SE&SI	0.0100	0.0010	0.5590	0.0415
CLK(LH)	Q(HL)	!D&RN&SE&!SI	0.0100	0.0010	0.5591	0.0416
CLK(LH)	Q(HL)	D&RN&SE&!SI	0.0100	0.0010	0.5590	0.0415
CLK(LH)	Q(LH)	!D&RN&SE&SI	0.0100	0.0010	0.6184	0.0518
CLK(LH)	Q(LH)	D&RN&!SE&!SI	0.0100	0.0010	0.6184	0.0518
CLK(LH)	Q(LH)	D&RN&!SE&SI	0.0100	0.0010	0.6184	0.0518
CLK(LH)	Q(LH)	D&RN&SE&SI	0.0100	0.0010	0.6185	0.0518
RN(HL)	Q(HL)	!CLK&!D&!SE&!SI	0.0100	0.0010	0.2144	0.0426
RN(HL)	Q(HL)	!CLK&D&SE&!SI	0.0100	0.0010	0.2144	0.0426
RN(HL)	Q(HL)	!CLK&D&!SE&SI	0.0100	0.0010	0.2143	0.0427
RN(HL)	Q(HL)	!CLK&D&SE&SI	0.0100	0.0010	0.2143	0.0427
RN(HL)	Q(HL)	CLK&D&!SE&!SI	0.0100	0.0010	0.2146	0.0425
RN(HL)	Q(HL)	CLK&D&SE&!SI	0.0100	0.0010	0.2146	0.0425
RN(HL)	Q(HL)	CLK&D&!SE&SI	0.0100	0.0010	0.2146	0.0425
RN(HL)	Q(HL)	CLK&D&SE&SI	0.0100	0.0010	0.2146	0.0425
RN(HL)	Q(HL)	!CLK&!D&SE&!SI	0.0100	0.0010	0.2144	0.0426
RN(HL)	Q(HL)	!CLK&!D&!SE&SI	0.0100	0.0010	0.2144	0.0426
RN(HL)	Q(HL)	!CLK&!D&SE&SI	0.0100	0.0010	0.2143	0.0427
RN(HL)	Q(HL)	CLK&!D&!SE&!SI	0.0100	0.0010	0.2146	0.0425
RN(HL)	Q(HL)	CLK&!D&SE&!SI	0.0100	0.0010	0.2146	0.0425
RN(HL)	Q(HL)	CLK&!D&!SE&SI	0.0100	0.0010	0.2146	0.0425
RN(HL)	Q(HL)	CLK&!D&SE&SI	0.0100	0.0010	0.2146	0.0425
RN(HL)	Q(HL)	!CLK&D&!SE&!SI	0.0100	0.0010	0.2143	0.0427

DYNAMIC ENERGY

Input Pin	When Condition	Tin (ns)	Output	Out Load (pf)	Energy (uW/MHz)
CLK	!D&RN&!SE&!SI	0.0100	Q(HL)	0.0010	0.7888
CLK	!D&RN&!SE&SI	0.0100	Q(HL)	0.0010	0.7888
CLK	!D&RN&SE&!SI	0.0100	Q(HL)	0.0010	0.7887
CLK	D&RN&SE&!SI	0.0100	Q(HL)	0.0010	0.7885
CLK	!D&RN&SE&SI	0.0100	Q(LH)	0.0010	0.8282
CLK	D&RN&!SE&!SI	0.0100	Q(LH)	0.0010	0.8281
CLK	D&RN&!SE&SI	0.0100	Q(LH)	0.0010	0.8281
CLK	D&RN&SE&SI	0.0100	Q(LH)	0.0010	0.8283
RN	!CLK&!D&!SE&!SI	0.0100	Q(HL)	0.0010	0.5407
RN	!CLK&D&SE&!SI	0.0100	Q(HL)	0.0010	0.5407
RN	!CLK&D&!SE&SI	0.0100	Q(HL)	0.0010	0.5586
RN	!CLK&D&SE&SI	0.0100	Q(HL)	0.0010	0.5587
RN	CLK&D&!SE&!SI	0.0100	Q(HL)	0.0010	0.8370
RN	CLK&D&SE&!SI	0.0100	Q(HL)	0.0010	0.8370
RN	CLK&D&!SE&SI	0.0100	Q(HL)	0.0010	0.8370
RN	CLK&D&SE&SI	0.0100	Q(HL)	0.0010	0.8370
RN	!CLK&!D&SE&!SI	0.0100	Q(HL)	0.0010	0.5407
RN	!CLK&!D&!SE&SI	0.0100	Q(HL)	0.0010	0.5407

continues on next page

Table 275 – continued from previous page

RN	!CLK&!D&SE&SI	0.0100	Q(HL)	0.0010	0.5587
RN	CLK&!D&!SE&!SI	0.0100	Q(HL)	0.0010	0.8371
RN	CLK&!D&SE&!SI	0.0100	Q(HL)	0.0010	0.8370
RN	CLK&!D&!SE&SI	0.0100	Q(HL)	0.0010	0.8371
RN	CLK&!D&SE&SI	0.0100	Q(HL)	0.0010	0.8370
RN	!CLK&D&!SE&!SI	0.0100	Q(HL)	0.0010	0.5586
D(HL)	!CLK&!RN&!SE&!SI	0.0100	n/a	n/a	0.4215
D(HL)	!CLK&!RN&!SE&SI	0.0100	n/a	n/a	0.4215
D(HL)	!CLK&!RN&SE&!SI	0.0100	n/a	n/a	0.0329
D(HL)	!CLK&!RN&SE&SI	0.0100	n/a	n/a	0.0153
D(HL)	CLK&!RN&!SE&!SI	0.0100	n/a	n/a	0.0367
D(HL)	CLK&!RN&!SE&SI	0.0100	n/a	n/a	0.0367
D(HL)	CLK&!RN&SE&!SI	0.0100	n/a	n/a	0.0392
D(HL)	CLK&!RN&SE&SI	0.0100	n/a	n/a	0.0169
D(HL)	CLK&RN&!SE&!SI	0.0100	n/a	n/a	0.0622
D(HL)	CLK&RN&SE&!SI	0.0100	n/a	n/a	0.0321
D(HL)	CLK&RN&!SE&SI	0.0100	n/a	n/a	0.0622
D(HL)	CLK&RN&SE&SI	0.0100	n/a	n/a	0.0136
D(HL)	!CLK&RN&!SE&!SI	0.0100	n/a	n/a	0.4031
D(HL)	!CLK&RN&SE&!SI	0.0100	n/a	n/a	0.0329
D(HL)	!CLK&RN&!SE&SI	0.0100	n/a	n/a	0.4031
D(HL)	!CLK&RN&SE&SI	0.0100	n/a	n/a	0.0153
SE(LH)	!CLK&!D&!RN&!SI	0.0100	n/a	n/a	0.0029
SE(LH)	!CLK&!D&!RN&SI	0.0100	n/a	n/a	0.2712
SE(LH)	!CLK&D&!RN&!SI	0.0100	n/a	n/a	0.4508
SE(LH)	!CLK&D&!RN&SI	0.0100	n/a	n/a	-0.0120
SE(LH)	CLK&!D&!RN&!SI	0.0100	n/a	n/a	-0.0000
SE(LH)	CLK&!D&!RN&SI	0.0100	n/a	n/a	-0.0086
SE(LH)	CLK&D&!RN&!SI	0.0100	n/a	n/a	0.0008
SE(LH)	CLK&D&!RN&SI	0.0100	n/a	n/a	-0.0125
SE(LH)	!CLK&D&RN&!SI	0.0100	n/a	n/a	0.4315
SE(LH)	!CLK&D&RN&SI	0.0100	n/a	n/a	-0.0120
SE(LH)	CLK&D&RN&!SI	0.0100	n/a	n/a	0.0335
SE(LH)	CLK&D&RN&SI	0.0100	n/a	n/a	-0.0156
SE(LH)	!CLK&!D&RN&!SI	0.0100	n/a	n/a	0.0029
SE(LH)	!CLK&!D&RN&SI	0.0100	n/a	n/a	0.2813
SE(LH)	CLK&!D&RN&!SI	0.0100	n/a	n/a	-0.0000
SE(LH)	CLK&!D&RN&SI	0.0100	n/a	n/a	-0.0086
CLK(LH)	!D&!RN&!SE&!SI	0.0100	n/a	n/a	0.2920
CLK(LH)	!D&!RN&!SE&SI	0.0100	n/a	n/a	0.2920
CLK(LH)	!D&!RN&SE&!SI	0.0100	n/a	n/a	0.2920
CLK(LH)	!D&!RN&SE&SI	0.0100	n/a	n/a	0.6240
CLK(LH)	D&!RN&!SE&!SI	0.0100	n/a	n/a	0.6240
CLK(LH)	D&!RN&!SE&SI	0.0100	n/a	n/a	0.6240
CLK(LH)	D&!RN&SE&!SI	0.0100	n/a	n/a	0.2920
CLK(LH)	D&!RN&SE&SI	0.0100	n/a	n/a	0.6240
CLK(LH)	D&RN&!SE&!SI	0.0100	n/a	n/a	0.2850
CLK(LH)	D&RN&SE&!SI	0.0100	n/a	n/a	0.2920
CLK(LH)	D&RN&!SE&SI	0.0100	n/a	n/a	0.2850
CLK(LH)	D&RN&SE&SI	0.0100	n/a	n/a	0.2850
CLK(LH)	!D&RN&!SE&!SI	0.0100	n/a	n/a	0.2920
CLK(LH)	!D&RN&SE&!SI	0.0100	n/a	n/a	0.2920

continues on next page

Table 275 – continued from previous page

CLK(LH)	!D&RN&!SE&SI	0.0100	n/a	n/a	0.2920
CLK(LH)	!D&RN&SE&SI	0.0100	n/a	n/a	0.2852
SI(LH)	!CLK&!D&!RN&!SE	0.0100	n/a	n/a	-0.0315
SI(LH)	!CLK&!D&!RN&SE	0.0100	n/a	n/a	0.2722
SI(LH)	!CLK&D&!RN&!SE	0.0100	n/a	n/a	-0.0293
SI(LH)	!CLK&D&!RN&SE	0.0100	n/a	n/a	0.2521
SI(LH)	CLK&!D&!RN&!SE	0.0100	n/a	n/a	-0.0315
SI(LH)	CLK&!D&!RN&SE	0.0100	n/a	n/a	-0.0260
SI(LH)	CLK&D&!RN&!SE	0.0100	n/a	n/a	-0.0304
SI(LH)	CLK&D&!RN&SE	0.0100	n/a	n/a	-0.0262
SI(LH)	!CLK&D&RN&!SE	0.0100	n/a	n/a	-0.0293
SI(LH)	!CLK&D&RN&SE	0.0100	n/a	n/a	0.2624
SI(LH)	CLK&D&RN&!SE	0.0100	n/a	n/a	-0.0298
SI(LH)	CLK&D&RN&SE	0.0100	n/a	n/a	-0.0262
SI(LH)	!CLK&!D&RN&!SE	0.0100	n/a	n/a	-0.0316
SI(LH)	!CLK&!D&RN&SE	0.0100	n/a	n/a	0.2824
SI(LH)	CLK&!D&RN&!SE	0.0100	n/a	n/a	-0.0315
SI(LH)	CLK&!D&RN&SE	0.0100	n/a	n/a	-0.0260
SE(HL)	!CLK&!D&!RN&!SI	0.0100	n/a	n/a	0.1895
SE(HL)	!CLK&!D&!RN&SI	0.0100	n/a	n/a	0.6021
SE(HL)	!CLK&D&!RN&!SI	0.0100	n/a	n/a	0.4576
SE(HL)	!CLK&D&!RN&SI	0.0100	n/a	n/a	0.1920
SE(HL)	CLK&!D&!RN&!SI	0.0100	n/a	n/a	0.1973
SE(HL)	CLK&!D&!RN&SI	0.0100	n/a	n/a	0.1936
SE(HL)	CLK&D&!RN&!SI	0.0100	n/a	n/a	0.1930
SE(HL)	CLK&D&!RN&SI	0.0100	n/a	n/a	0.1939
SE(HL)	!CLK&D&RN&!SI	0.0100	n/a	n/a	0.4681
SE(HL)	!CLK&D&RN&SI	0.0100	n/a	n/a	0.1921
SE(HL)	CLK&D&RN&!SI	0.0100	n/a	n/a	0.1949
SE(HL)	CLK&D&RN&SI	0.0100	n/a	n/a	0.1915
SE(HL)	!CLK&!D&RN&!SI	0.0100	n/a	n/a	0.1895
SE(HL)	!CLK&!D&RN&SI	0.0100	n/a	n/a	0.5837
SE(HL)	CLK&!D&RN&!SI	0.0100	n/a	n/a	0.1887
SE(HL)	CLK&!D&RN&SI	0.0100	n/a	n/a	0.2432
CLK(HL)	!D&!RN&!SE&!SI	0.0100	n/a	n/a	0.4403
CLK(HL)	!D&!RN&!SE&SI	0.0100	n/a	n/a	0.4403
CLK(HL)	!D&!RN&SE&!SI	0.0100	n/a	n/a	0.4686
CLK(HL)	!D&!RN&SE&SI	0.0100	n/a	n/a	0.6650
CLK(HL)	D&!RN&!SE&!SI	0.0100	n/a	n/a	0.6217
CLK(HL)	D&!RN&!SE&SI	0.0100	n/a	n/a	0.6217
CLK(HL)	D&!RN&SE&!SI	0.0100	n/a	n/a	0.5006
CLK(HL)	D&!RN&SE&SI	0.0100	n/a	n/a	0.6433
CLK(HL)	D&RN&!SE&!SI	0.0100	n/a	n/a	0.3817
CLK(HL)	D&RN&SE&!SI	0.0100	n/a	n/a	0.3822
CLK(HL)	D&RN&!SE&SI	0.0100	n/a	n/a	0.3817
CLK(HL)	D&RN&SE&SI	0.0100	n/a	n/a	0.3815
CLK(HL)	!D&RN&!SE&!SI	0.0100	n/a	n/a	0.3822
CLK(HL)	!D&RN&SE&!SI	0.0100	n/a	n/a	0.3823
CLK(HL)	!D&RN&!SE&SI	0.0100	n/a	n/a	0.3822
CLK(HL)	!D&RN&SE&SI	0.0100	n/a	n/a	0.3815
SI(HL)	!CLK&!D&!RN&!SE	0.0100	n/a	n/a	0.0324
SI(HL)	!CLK&!D&!RN&SE	0.0100	n/a	n/a	0.5058

continues on next page

Table 275 – continued from previous page

SI(HL)	!CLK&D&!RN&!SE	0.0100	n/a	n/a	0.0320
SI(HL)	!CLK&D&!RN&SE	0.0100	n/a	n/a	0.5165
SI(HL)	CLK&!D&!RN&!SE	0.0100	n/a	n/a	0.0320
SI(HL)	CLK&!D&!RN&SE	0.0100	n/a	n/a	0.0324
SI(HL)	CLK&D&!RN&!SE	0.0100	n/a	n/a	0.0320
SI(HL)	CLK&D&!RN&SE	0.0100	n/a	n/a	0.0322
SI(HL)	!CLK&D&RN&!SE	0.0100	n/a	n/a	0.0320
SI(HL)	!CLK&D&RN&SE	0.0100	n/a	n/a	0.4970
SI(HL)	CLK&D&RN&!SE	0.0100	n/a	n/a	0.0321
SI(HL)	CLK&D&RN&SE	0.0100	n/a	n/a	0.0880
SI(HL)	!CLK&!D&RN&!SE	0.0100	n/a	n/a	0.0325
SI(HL)	!CLK&!D&RN&SE	0.0100	n/a	n/a	0.4867
SI(HL)	CLK&!D&RN&!SE	0.0100	n/a	n/a	0.0320
SI(HL)	CLK&!D&RN&SE	0.0100	n/a	n/a	0.1113
D(LH)	!CLK&!RN&!SE&!SI	0.0100	n/a	n/a	0.2358
D(LH)	!CLK&!RN&!SE&SI	0.0100	n/a	n/a	0.2358
D(LH)	!CLK&!RN&SE&!SI	0.0100	n/a	n/a	-0.0289
D(LH)	!CLK&!RN&SE&SI	0.0100	n/a	n/a	-0.0103
D(LH)	CLK&!RN&!SE&!SI	0.0100	n/a	n/a	-0.0280
D(LH)	CLK&!RN&!SE&SI	0.0100	n/a	n/a	-0.0277
D(LH)	CLK&!RN&SE&!SI	0.0100	n/a	n/a	-0.0313
D(LH)	CLK&!RN&SE&SI	0.0100	n/a	n/a	-0.0224
D(LH)	CLK&RN&!SE&!SI	0.0100	n/a	n/a	-0.0280
D(LH)	CLK&RN&SE&!SI	0.0100	n/a	n/a	-0.0313
D(LH)	CLK&RN&!SE&SI	0.0100	n/a	n/a	-0.0277
D(LH)	CLK&RN&SE&SI	0.0100	n/a	n/a	-0.0109
D(LH)	!CLK&RN&!SE&!SI	0.0100	n/a	n/a	0.2460
D(LH)	!CLK&RN&SE&!SI	0.0100	n/a	n/a	-0.0289
D(LH)	!CLK&RN&!SE&SI	0.0100	n/a	n/a	0.2460
D(LH)	!CLK&RN&SE&SI	0.0100	n/a	n/a	-0.0103
RN(HL)	!CLK&!D&!SE&!SI	0.0100	n/a	n/a	0.0673
RN(HL)	!CLK&D&SE&!SI	0.0100	n/a	n/a	0.0673
RN(HL)	!CLK&D&!SE&SI	0.0100	n/a	n/a	0.0665
RN(HL)	!CLK&D&SE&SI	0.0100	n/a	n/a	0.0665
RN(HL)	CLK&D&!SE&!SI	0.0100	n/a	n/a	0.0693
RN(HL)	CLK&D&SE&!SI	0.0100	n/a	n/a	0.0695
RN(HL)	CLK&D&!SE&SI	0.0100	n/a	n/a	0.0693
RN(HL)	CLK&D&SE&SI	0.0100	n/a	n/a	0.0693
RN(HL)	!CLK&!D&SE&!SI	0.0100	n/a	n/a	0.0673
RN(HL)	!CLK&!D&!SE&SI	0.0100	n/a	n/a	0.0673
RN(HL)	!CLK&!D&SE&SI	0.0100	n/a	n/a	0.0665
RN(HL)	CLK&!D&!SE&!SI	0.0100	n/a	n/a	0.0695
RN(HL)	CLK&!D&SE&!SI	0.0100	n/a	n/a	0.0695
RN(HL)	CLK&!D&!SE&SI	0.0100	n/a	n/a	0.0695
RN(HL)	CLK&!D&SE&SI	0.0100	n/a	n/a	0.0693
RN(HL)	!CLK&D&!SE&!SI	0.0100	n/a	n/a	0.0665
RN(LH)	!CLK&!D&!SE&!SI	0.0100	n/a	n/a	-0.0641
RN(LH)	!CLK&!D&!SE&SI	0.0100	n/a	n/a	-0.0641
RN(LH)	!CLK&!D&SE&!SI	0.0100	n/a	n/a	-0.0641
RN(LH)	!CLK&!D&SE&SI	0.0100	n/a	n/a	-0.0591
RN(LH)	!CLK&D&!SE&!SI	0.0100	n/a	n/a	-0.0591
RN(LH)	!CLK&D&!SE&SI	0.0100	n/a	n/a	-0.0591

continues on next page

Table 275 – continued from previous page

RN(LH)	!CLK&D&SE&!SI	0.0100	n/a	n/a	-0.0641
RN(LH)	!CLK&D&SE&SI	0.0100	n/a	n/a	-0.0591
RN(LH)	CLK&!D&!SE&!SI	0.0100	n/a	n/a	-0.0641
RN(LH)	CLK&!D&!SE&SI	0.0100	n/a	n/a	-0.0641
RN(LH)	CLK&!D&SE&!SI	0.0100	n/a	n/a	-0.0641
RN(LH)	CLK&!D&SE&SI	0.0100	n/a	n/a	-0.0641
RN(LH)	CLK&D&!SE&!SI	0.0100	n/a	n/a	-0.0641
RN(LH)	CLK&D&!SE&SI	0.0100	n/a	n/a	-0.0641
RN(LH)	CLK&D&SE&!SI	0.0100	n/a	n/a	-0.0641
RN(LH)	CLK&D&SE&SI	0.0100	n/a	n/a	-0.0641

LEAKAGE POWER

When Condition	Power (nW)
!CLK&!D&!RN&!SE&!SI	0.4461
!CLK&!D&!RN&!SE&SI	0.4462
!CLK&!D&!RN&SE&!SI	0.4862
!CLK&!D&!RN&SE&SI	0.5122
!CLK&D&!RN&!SE&!SI	0.4406
!CLK&D&!RN&!SE&SI	0.4406
!CLK&D&!RN&SE&!SI	0.5257
!CLK&D&!RN&SE&SI	0.4768
CLK&!D&!RN&!SE&!SI	0.4257
CLK&!D&!RN&!SE&SI	0.4257
CLK&!D&!RN&SE&!SI	0.4266
CLK&!D&!RN&SE&SI	0.4269
CLK&D&!RN&!SE&!SI	0.4260
CLK&D&!RN&!SE&SI	0.4260
CLK&D&!RN&SE&!SI	0.4267
CLK&D&!RN&SE&SI	0.4269
CLK&!D&RN&!SE&!SI	0.4655
CLK&!D&RN&!SE&SI	0.4655
CLK&!D&RN&SE&!SI	0.4664
CLK&D&RN&SE&!SI	0.4664
CLK&!D&RN&SE&SI	0.6751
CLK&D&RN&!SE&!SI	0.6396
CLK&D&RN&!SE&SI	0.6396
CLK&D&RN&SE&SI	0.6591
!CLK&!D&RN&!SE&!SI	0.4463
!CLK&!D&RN&!SE&SI	0.4465
!CLK&!D&RN&SE&!SI	0.4865
!CLK&!D&RN&SE&SI	0.6613
!CLK&D&RN&!SE&!SI	0.5897
!CLK&D&RN&!SE&SI	0.5897
!CLK&D&RN&SE&!SI	0.5260
!CLK&D&RN&SE&SI	0.6259

gf180mcu_fd_sc_mcu9t5v0__sdffrnq_2

gf180mcu_fd_sc_mcu9t5v0__sdffrnq_2 symbol

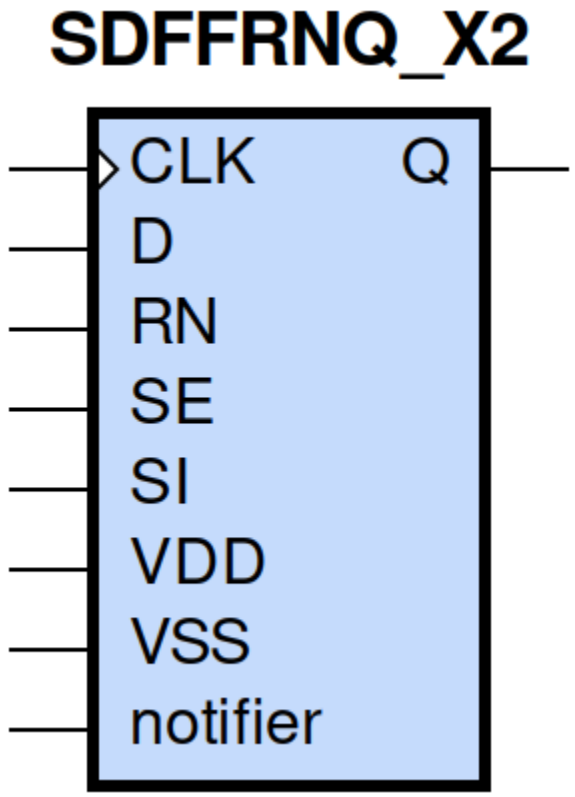

gf180mcu_fd_sc_mcu9t5v0__sdffrnq_2 schematic

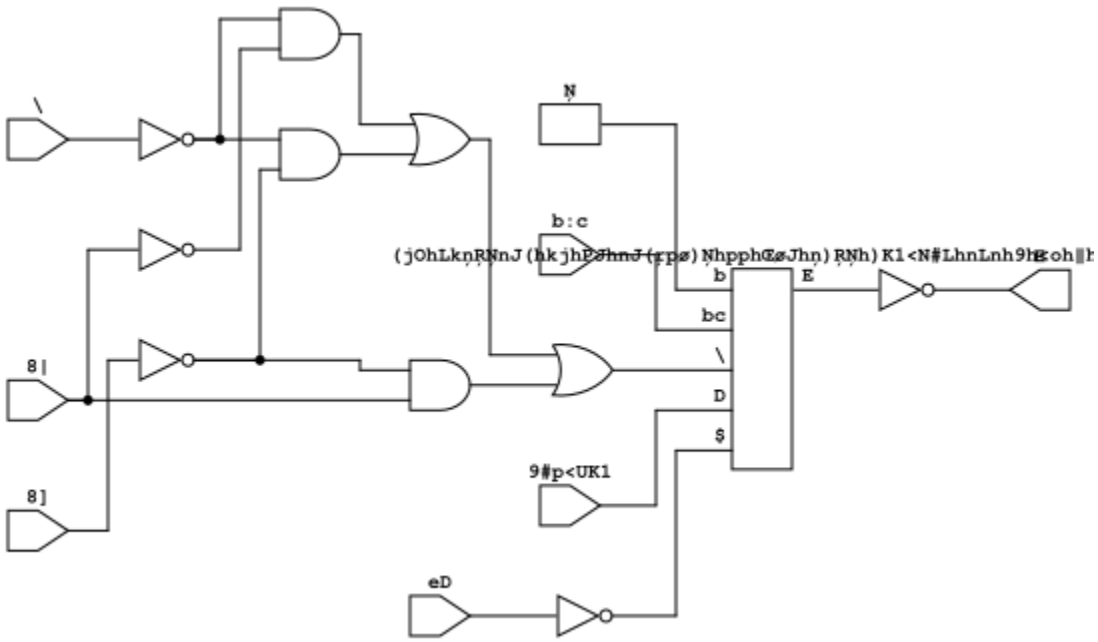

gf180mcu_fd_sc_mcu9t5v0__sdffrnq_2 layout

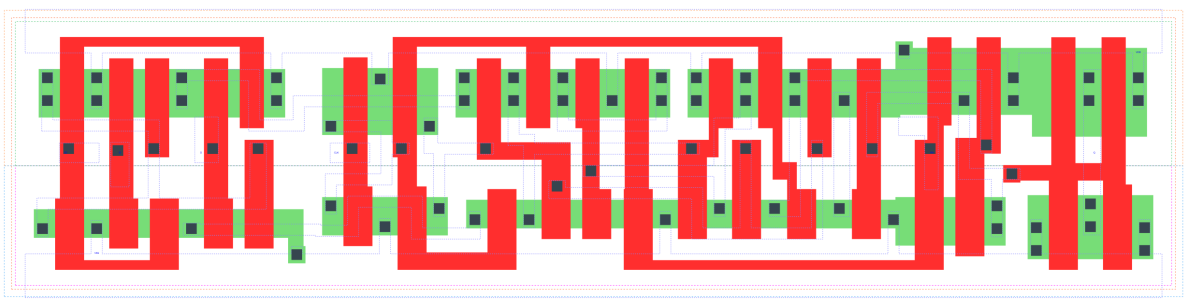

SDFFRNQ_X2 is a positive edge triggered scan D-type flip flop with active low reset and 2X drive strength

Attributes

Attribute	Value
area	118.540800 μm^2

TRUTH TABLE

Input					Output
RN	SE	SI	D	CLK	Q
H	L	X	L	↑	L
H	L	X	H	↑	H
H	H	L	X	↑	L
H	H	H	X	↑	H
L	X	X	X	X	L

FUNCTIONAL SCHEMATIC

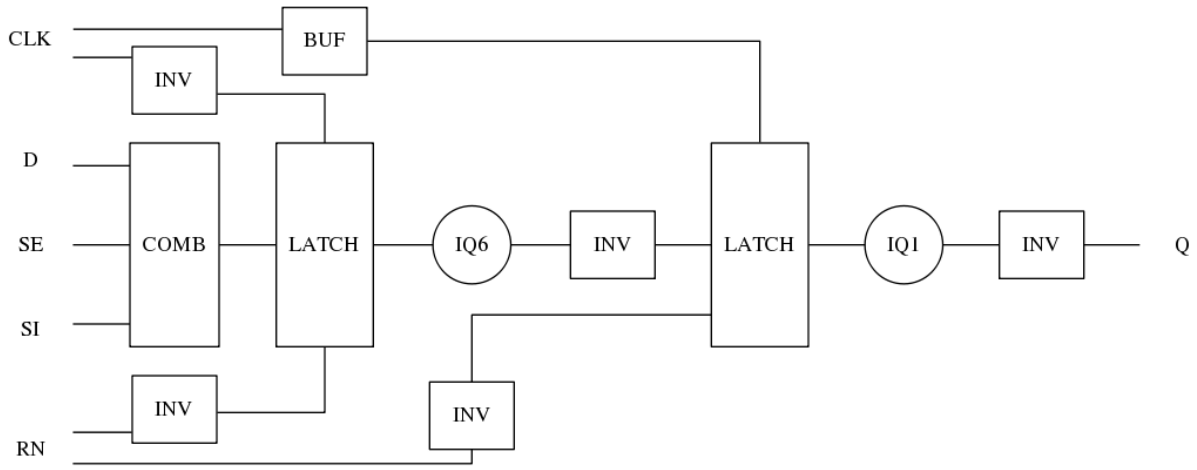

CONSTRAINTS

Constraint Pin	Related Pin	setup(ns)	hold(ns)
SE(LH)	CLK(LH)	0.4640	-0.2060
SE(LH)	CLK(LH)	0.6350	-0.0860
SE(HL)	CLK(LH)	0.5210	-0.0520
SE(HL)	CLK(LH)	0.5440	-0.3030
SI(HL)	CLK(LH)	0.6010	-0.0860
SI(HL)	CLK(LH)	0.6070	-0.0520
SI(LH)	CLK(LH)	0.5150	-0.2520
SI(LH)	CLK(LH)	0.4980	-0.2460
D(HL)	CLK(LH)	0.5100	-0.0400
D(HL)	CLK(LH)	0.5100	-0.0400
D(LH)	CLK(LH)	0.4350	-0.1950
D(LH)	CLK(LH)	0.4350	-0.1950

Constraint Pin	Related Pin	recovery(ns)	removal(ns)
RN(LH)	CLK(LH)	-0.1770	0.3210
RN(LH)	CLK(LH)	-0.1770	0.3210
RN(LH)	CLK(LH)	-0.1770	0.3210
RN(LH)	CLK(LH)	-0.1770	0.3210

Constraint Pin	Related Pin	Minimum Pulse Width(ns)
CLK(HLH)	CLK(HL)	0.6080
CLK(HLH)	CLK(HL)	0.6320
CLK(HLH)	CLK(HL)	0.6140
CLK(HLH)	CLK(HL)	0.5770
CLK(HLH)	CLK(HL)	0.4980
CLK(HLH)	CLK(HL)	0.6990
CLK(HLH)	CLK(HL)	0.4980
CLK(HLH)	CLK(HL)	0.5400
CLK(LHL)	CLK(LH)	0.3580
CLK(LHL)	CLK(LH)	0.3580
CLK(LHL)	CLK(LH)	0.3580
CLK(LHL)	CLK(LH)	0.3880
CLK(LHL)	CLK(LH)	0.3880
CLK(LHL)	CLK(LH)	0.3580
CLK(LHL)	CLK(LH)	0.3880
CLK(LHL)	CLK(LH)	0.3880
RN(HLH)	RN(HL)	0.2900
RN(HLH)	RN(HL)	0.2900
RN(HLH)	RN(HL)	0.2900
RN(HLH)	RN(HL)	0.2900
RN(HLH)	RN(HL)	0.3680
RN(HLH)	RN(HL)	0.3680
RN(HLH)	RN(HL)	0.3680
RN(HLH)	RN(HL)	0.3680
RN(HLH)	RN(HL)	0.2900
RN(HLH)	RN(HL)	0.2900
RN(HLH)	RN(HL)	0.2900
RN(HLH)	RN(HL)	0.3680
RN(HLH)	RN(HL)	0.3680
RN(HLH)	RN(HL)	0.3680
RN(HLH)	RN(HL)	0.3680
RN(HLH)	RN(HL)	0.2900

PIN CAPACITANCE (pf)

Pin	Type	Capacitance (pf)
SE	input	0.0084
SI	input	0.0039
D	input	0.0039
CLK	input	0.0051
RN	input	0.0096

DELAY AND OUTPUT TRANSITION TIME corresponding to min slew and load

Input Pin	Output	When Condition	Tin (ns)	Out Load (pf)	Delay (ns)	Tout (ns)
CLK(LH)	Q(HL)	!D&RN&!SE&!SI	0.0100	0.0010	0.5742	0.0354
CLK(LH)	Q(HL)	!D&RN&!SE&SI	0.0100	0.0010	0.5743	0.0354
CLK(LH)	Q(HL)	!D&RN&SE&!SI	0.0100	0.0010	0.5742	0.0353
CLK(LH)	Q(HL)	D&RN&SE&!SI	0.0100	0.0010	0.5742	0.0354
CLK(LH)	Q(LH)	!D&RN&SE&SI	0.0100	0.0010	0.6015	0.0393
CLK(LH)	Q(LH)	D&RN&!SE&!SI	0.0100	0.0010	0.6015	0.0393
CLK(LH)	Q(LH)	D&RN&!SE&SI	0.0100	0.0010	0.6015	0.0393
CLK(LH)	Q(LH)	D&RN&SE&SI	0.0100	0.0010	0.6015	0.0393
RN(HL)	Q(HL)	!CLK&!D&!SE&!SI	0.0100	0.0010	0.2113	0.0364
RN(HL)	Q(HL)	!CLK&D&SE&!SI	0.0100	0.0010	0.2113	0.0364
RN(HL)	Q(HL)	!CLK&D&!SE&SI	0.0100	0.0010	0.2112	0.0366
RN(HL)	Q(HL)	!CLK&D&SE&SI	0.0100	0.0010	0.2112	0.0366
RN(HL)	Q(HL)	CLK&D&!SE&!SI	0.0100	0.0010	0.2112	0.0363
RN(HL)	Q(HL)	CLK&D&SE&!SI	0.0100	0.0010	0.2112	0.0363
RN(HL)	Q(HL)	CLK&D&!SE&SI	0.0100	0.0010	0.2112	0.0363
RN(HL)	Q(HL)	CLK&D&SE&SI	0.0100	0.0010	0.2112	0.0363
RN(HL)	Q(HL)	!CLK&!D&SE&!SI	0.0100	0.0010	0.2113	0.0364
RN(HL)	Q(HL)	!CLK&!D&!SE&SI	0.0100	0.0010	0.2113	0.0364
RN(HL)	Q(HL)	!CLK&!D&SE&SI	0.0100	0.0010	0.2112	0.0366
RN(HL)	Q(HL)	CLK&!D&!SE&!SI	0.0100	0.0010	0.2112	0.0363
RN(HL)	Q(HL)	CLK&!D&SE&!SI	0.0100	0.0010	0.2112	0.0363
RN(HL)	Q(HL)	CLK&!D&!SE&SI	0.0100	0.0010	0.2112	0.0363
RN(HL)	Q(HL)	CLK&!D&SE&SI	0.0100	0.0010	0.2112	0.0363
RN(HL)	Q(HL)	!CLK&D&!SE&!SI	0.0100	0.0010	0.2112	0.0366

DYNAMIC ENERGY

Input Pin	When Condition	Tin (ns)	Output	Out Load (pf)	Energy (uW/MHz)
CLK	!D&RN&!SE&!SI	0.0100	Q(HL)	0.0010	1.0182
CLK	!D&RN&!SE&SI	0.0100	Q(HL)	0.0010	1.0183
CLK	!D&RN&SE&!SI	0.0100	Q(HL)	0.0010	1.0181
CLK	D&RN&SE&!SI	0.0100	Q(HL)	0.0010	1.0182
CLK	!D&RN&SE&SI	0.0100	Q(LH)	0.0010	1.0454

continues on next page

Table 278 – continued from previous page

CLK	D&RN&!SE&!SI	0.0100	Q(LH)	0.0010	1.0453
CLK	D&RN&!SE&SI	0.0100	Q(LH)	0.0010	1.0453
CLK	D&RN&SE&SI	0.0100	Q(LH)	0.0010	1.0455
RN	!CLK&!D&!SE&!SI	0.0100	Q(HL)	0.0010	0.7870
RN	!CLK&D&SE&!SI	0.0100	Q(HL)	0.0010	0.7870
RN	!CLK&D&!SE&SI	0.0100	Q(HL)	0.0010	0.8091
RN	!CLK&D&SE&SI	0.0100	Q(HL)	0.0010	0.8091
RN	CLK&D&!SE&!SI	0.0100	Q(HL)	0.0010	1.0903
RN	CLK&D&SE&!SI	0.0100	Q(HL)	0.0010	1.0903
RN	CLK&D&!SE&SI	0.0100	Q(HL)	0.0010	1.0903
RN	CLK&D&SE&SI	0.0100	Q(HL)	0.0010	1.0903
RN	!CLK&!D&SE&!SI	0.0100	Q(HL)	0.0010	0.7870
RN	!CLK&!D&!SE&SI	0.0100	Q(HL)	0.0010	0.7870
RN	!CLK&!D&SE&SI	0.0100	Q(HL)	0.0010	0.8092
RN	CLK&!D&!SE&!SI	0.0100	Q(HL)	0.0010	1.0904
RN	CLK&!D&SE&!SI	0.0100	Q(HL)	0.0010	1.0903
RN	CLK&!D&!SE&SI	0.0100	Q(HL)	0.0010	1.0904
RN	CLK&!D&SE&SI	0.0100	Q(HL)	0.0010	1.0902
RN	!CLK&D&!SE&!SI	0.0100	Q(HL)	0.0010	0.8091
D(HL)	!CLK&!RN&!SE&!SI	0.0100	n/a	n/a	0.4265
D(HL)	!CLK&!RN&!SE&SI	0.0100	n/a	n/a	0.4265
D(HL)	!CLK&!RN&SE&!SI	0.0100	n/a	n/a	0.0329
D(HL)	!CLK&!RN&SE&SI	0.0100	n/a	n/a	0.0153
D(HL)	CLK&!RN&!SE&!SI	0.0100	n/a	n/a	0.0367
D(HL)	CLK&!RN&!SE&SI	0.0100	n/a	n/a	0.0367
D(HL)	CLK&!RN&SE&!SI	0.0100	n/a	n/a	0.0394
D(HL)	CLK&!RN&SE&SI	0.0100	n/a	n/a	0.0165
D(HL)	CLK&RN&!SE&!SI	0.0100	n/a	n/a	0.0662
D(HL)	CLK&RN&SE&!SI	0.0100	n/a	n/a	0.0321
D(HL)	CLK&RN&!SE&SI	0.0100	n/a	n/a	0.0662
D(HL)	CLK&RN&SE&SI	0.0100	n/a	n/a	0.0137
D(HL)	!CLK&RN&!SE&!SI	0.0100	n/a	n/a	0.4073
D(HL)	!CLK&RN&SE&!SI	0.0100	n/a	n/a	0.0329
D(HL)	!CLK&RN&!SE&SI	0.0100	n/a	n/a	0.4073
D(HL)	!CLK&RN&SE&SI	0.0100	n/a	n/a	0.0153
SE(LH)	!CLK&!D&!RN&!SI	0.0100	n/a	n/a	0.0032
SE(LH)	!CLK&!D&!RN&SI	0.0100	n/a	n/a	0.2724
SE(LH)	!CLK&D&!RN&!SI	0.0100	n/a	n/a	0.4575
SE(LH)	!CLK&D&!RN&SI	0.0100	n/a	n/a	-0.0120
SE(LH)	CLK&!D&!RN&!SI	0.0100	n/a	n/a	0.0000
SE(LH)	CLK&!D&!RN&SI	0.0100	n/a	n/a	-0.0088
SE(LH)	CLK&D&!RN&!SI	0.0100	n/a	n/a	0.0007
SE(LH)	CLK&D&!RN&SI	0.0100	n/a	n/a	-0.0129
SE(LH)	!CLK&D&RN&!SI	0.0100	n/a	n/a	0.4372
SE(LH)	!CLK&D&RN&SI	0.0100	n/a	n/a	-0.0119
SE(LH)	CLK&D&RN&!SI	0.0100	n/a	n/a	0.0376
SE(LH)	CLK&D&RN&SI	0.0100	n/a	n/a	-0.0153
SE(LH)	!CLK&!D&RN&!SI	0.0100	n/a	n/a	0.0032
SE(LH)	!CLK&!D&RN&SI	0.0100	n/a	n/a	0.2831
SE(LH)	CLK&!D&RN&!SI	0.0100	n/a	n/a	0.0000
SE(LH)	CLK&!D&RN&SI	0.0100	n/a	n/a	-0.0088
CLK(LH)	!D&!RN&!SE&!SI	0.0100	n/a	n/a	0.2975

continues on next page

Table 278 – continued from previous page

CLK(LH)	!D&!RN&!SE&SI	0.0100	n/a	n/a	0.2974
CLK(LH)	!D&!RN&SE&!SI	0.0100	n/a	n/a	0.2975
CLK(LH)	!D&!RN&SE&SI	0.0100	n/a	n/a	0.6343
CLK(LH)	D&!RN&!SE&!SI	0.0100	n/a	n/a	0.6343
CLK(LH)	D&!RN&!SE&SI	0.0100	n/a	n/a	0.6342
CLK(LH)	D&!RN&SE&!SI	0.0100	n/a	n/a	0.2975
CLK(LH)	D&!RN&SE&SI	0.0100	n/a	n/a	0.6342
CLK(LH)	D&RN&!SE&!SI	0.0100	n/a	n/a	0.2901
CLK(LH)	D&RN&SE&!SI	0.0100	n/a	n/a	0.2976
CLK(LH)	D&RN&!SE&SI	0.0100	n/a	n/a	0.2903
CLK(LH)	D&RN&SE&SI	0.0100	n/a	n/a	0.2903
CLK(LH)	!D&RN&!SE&!SI	0.0100	n/a	n/a	0.2976
CLK(LH)	!D&RN&SE&!SI	0.0100	n/a	n/a	0.2976
CLK(LH)	!D&RN&!SE&SI	0.0100	n/a	n/a	0.2975
CLK(LH)	!D&RN&SE&SI	0.0100	n/a	n/a	0.2902
SI(LH)	!CLK&!D&!RN&!SE	0.0100	n/a	n/a	-0.0315
SI(LH)	!CLK&!D&!RN&SE	0.0100	n/a	n/a	0.2735
SI(LH)	!CLK&D&!RN&!SE	0.0100	n/a	n/a	-0.0293
SI(LH)	!CLK&D&!RN&SE	0.0100	n/a	n/a	0.2536
SI(LH)	CLK&!D&!RN&!SE	0.0100	n/a	n/a	-0.0315
SI(LH)	CLK&!D&!RN&SE	0.0100	n/a	n/a	-0.0258
SI(LH)	CLK&D&!RN&!SE	0.0100	n/a	n/a	-0.0303
SI(LH)	CLK&D&!RN&SE	0.0100	n/a	n/a	-0.0260
SI(LH)	!CLK&D&RN&!SE	0.0100	n/a	n/a	-0.0292
SI(LH)	!CLK&D&RN&SE	0.0100	n/a	n/a	0.2643
SI(LH)	CLK&D&RN&!SE	0.0100	n/a	n/a	-0.0297
SI(LH)	CLK&D&RN&SE	0.0100	n/a	n/a	-0.0259
SI(LH)	!CLK&!D&RN&!SE	0.0100	n/a	n/a	-0.0315
SI(LH)	!CLK&!D&RN&SE	0.0100	n/a	n/a	0.2841
SI(LH)	CLK&!D&RN&!SE	0.0100	n/a	n/a	-0.0315
SI(LH)	CLK&!D&RN&SE	0.0100	n/a	n/a	-0.0258
SE(HL)	!CLK&!D&!RN&!SI	0.0100	n/a	n/a	0.1941
SE(HL)	!CLK&!D&!RN&SI	0.0100	n/a	n/a	0.6115
SE(HL)	!CLK&D&!RN&!SI	0.0100	n/a	n/a	0.4638
SE(HL)	!CLK&D&!RN&SI	0.0100	n/a	n/a	0.1966
SE(HL)	CLK&!D&!RN&!SI	0.0100	n/a	n/a	0.2020
SE(HL)	CLK&!D&!RN&SI	0.0100	n/a	n/a	0.1982
SE(HL)	CLK&D&!RN&!SI	0.0100	n/a	n/a	0.1979
SE(HL)	CLK&D&!RN&SI	0.0100	n/a	n/a	0.1989
SE(HL)	!CLK&D&RN&!SI	0.0100	n/a	n/a	0.4746
SE(HL)	!CLK&D&RN&SI	0.0100	n/a	n/a	0.1968
SE(HL)	CLK&D&RN&!SI	0.0100	n/a	n/a	0.1998
SE(HL)	CLK&D&RN&SI	0.0100	n/a	n/a	0.1962
SE(HL)	!CLK&!D&RN&!SI	0.0100	n/a	n/a	0.1941
SE(HL)	!CLK&!D&RN&SI	0.0100	n/a	n/a	0.5924
SE(HL)	CLK&!D&RN&!SI	0.0100	n/a	n/a	0.1932
SE(HL)	CLK&!D&RN&SI	0.0100	n/a	n/a	0.2517
CLK(HL)	!D&!RN&!SE&!SI	0.0100	n/a	n/a	0.4387
CLK(HL)	!D&!RN&!SE&SI	0.0100	n/a	n/a	0.4387
CLK(HL)	!D&!RN&SE&!SI	0.0100	n/a	n/a	0.4676
CLK(HL)	!D&!RN&SE&SI	0.0100	n/a	n/a	0.6666
CLK(HL)	D&!RN&!SE&!SI	0.0100	n/a	n/a	0.6234

continues on next page

Table 278 – continued from previous page

CLK(HL)	D&!RN&!SE&SI	0.0100	n/a	n/a	0.6234
CLK(HL)	D&!RN&SE&!SI	0.0100	n/a	n/a	0.5002
CLK(HL)	D&!RN&SE&SI	0.0100	n/a	n/a	0.6452
CLK(HL)	D&RN&!SE&!SI	0.0100	n/a	n/a	0.3816
CLK(HL)	D&RN&SE&!SI	0.0100	n/a	n/a	0.3821
CLK(HL)	D&RN&!SE&SI	0.0100	n/a	n/a	0.3816
CLK(HL)	D&RN&SE&SI	0.0100	n/a	n/a	0.3815
CLK(HL)	!D&RN&!SE&!SI	0.0100	n/a	n/a	0.3821
CLK(HL)	!D&RN&SE&!SI	0.0100	n/a	n/a	0.3822
CLK(HL)	!D&RN&!SE&SI	0.0100	n/a	n/a	0.3821
CLK(HL)	!D&RN&SE&SI	0.0100	n/a	n/a	0.3814
SI(HL)	!CLK&!D&!RN&!SE	0.0100	n/a	n/a	0.0325
SI(HL)	!CLK&!D&!RN&SE	0.0100	n/a	n/a	0.5116
SI(HL)	!CLK&D&!RN&!SE	0.0100	n/a	n/a	0.0321
SI(HL)	!CLK&D&!RN&SE	0.0100	n/a	n/a	0.5231
SI(HL)	CLK&!D&!RN&!SE	0.0100	n/a	n/a	0.0321
SI(HL)	CLK&!D&!RN&SE	0.0100	n/a	n/a	0.0322
SI(HL)	CLK&D&!RN&!SE	0.0100	n/a	n/a	0.0321
SI(HL)	CLK&D&!RN&SE	0.0100	n/a	n/a	0.0321
SI(HL)	!CLK&D&RN&!SE	0.0100	n/a	n/a	0.0321
SI(HL)	!CLK&D&RN&SE	0.0100	n/a	n/a	0.5027
SI(HL)	CLK&D&RN&!SE	0.0100	n/a	n/a	0.0321
SI(HL)	CLK&D&RN&SE	0.0100	n/a	n/a	0.0920
SI(HL)	!CLK&!D&RN&!SE	0.0100	n/a	n/a	0.0325
SI(HL)	!CLK&!D&RN&SE	0.0100	n/a	n/a	0.4918
SI(HL)	CLK&!D&RN&!SE	0.0100	n/a	n/a	0.0320
SI(HL)	CLK&!D&RN&SE	0.0100	n/a	n/a	0.1153
D(LH)	!CLK&!RN&!SE&!SI	0.0100	n/a	n/a	0.2373
D(LH)	!CLK&!RN&!SE&SI	0.0100	n/a	n/a	0.2373
D(LH)	!CLK&!RN&SE&!SI	0.0100	n/a	n/a	-0.0286
D(LH)	!CLK&!RN&SE&SI	0.0100	n/a	n/a	-0.0103
D(LH)	CLK&!RN&!SE&!SI	0.0100	n/a	n/a	-0.0274
D(LH)	CLK&!RN&!SE&SI	0.0100	n/a	n/a	-0.0272
D(LH)	CLK&!RN&SE&!SI	0.0100	n/a	n/a	-0.0313
D(LH)	CLK&!RN&SE&SI	0.0100	n/a	n/a	-0.0220
D(LH)	CLK&RN&!SE&!SI	0.0100	n/a	n/a	-0.0274
D(LH)	CLK&RN&SE&!SI	0.0100	n/a	n/a	-0.0313
D(LH)	CLK&RN&!SE&SI	0.0100	n/a	n/a	-0.0272
D(LH)	CLK&RN&SE&SI	0.0100	n/a	n/a	-0.0108
D(LH)	!CLK&RN&!SE&!SI	0.0100	n/a	n/a	0.2480
D(LH)	!CLK&RN&SE&!SI	0.0100	n/a	n/a	-0.0287
D(LH)	!CLK&RN&!SE&SI	0.0100	n/a	n/a	0.2480
D(LH)	!CLK&RN&SE&SI	0.0100	n/a	n/a	-0.0103
RN(HL)	!CLK&!D&!SE&!SI	0.0100	n/a	n/a	0.0818
RN(HL)	!CLK&D&SE&!SI	0.0100	n/a	n/a	0.0818
RN(HL)	!CLK&D&!SE&SI	0.0100	n/a	n/a	0.0806
RN(HL)	!CLK&D&SE&SI	0.0100	n/a	n/a	0.0806
RN(HL)	CLK&D&!SE&!SI	0.0100	n/a	n/a	0.0838
RN(HL)	CLK&D&SE&!SI	0.0100	n/a	n/a	0.0840
RN(HL)	CLK&D&!SE&SI	0.0100	n/a	n/a	0.0838
RN(HL)	CLK&D&SE&SI	0.0100	n/a	n/a	0.0838
RN(HL)	!CLK&!D&SE&!SI	0.0100	n/a	n/a	0.0819

continues on next page

Table 278 – continued from previous page

RN(HL)	!CLK&!D&!SE&SI	0.0100	n/a	n/a	0.0818
RN(HL)	!CLK&!D&SE&SI	0.0100	n/a	n/a	0.0806
RN(HL)	CLK&!D&!SE&!SI	0.0100	n/a	n/a	0.0840
RN(HL)	CLK&!D&SE&!SI	0.0100	n/a	n/a	0.0840
RN(HL)	CLK&!D&!SE&SI	0.0100	n/a	n/a	0.0840
RN(HL)	CLK&!D&SE&SI	0.0100	n/a	n/a	0.0838
RN(HL)	!CLK&D&!SE&!SI	0.0100	n/a	n/a	0.0806
RN(LH)	!CLK&!D&!SE&!SI	0.0100	n/a	n/a	-0.0766
RN(LH)	!CLK&!D&!SE&SI	0.0100	n/a	n/a	-0.0766
RN(LH)	!CLK&!D&SE&!SI	0.0100	n/a	n/a	-0.0766
RN(LH)	!CLK&!D&SE&SI	0.0100	n/a	n/a	-0.0713
RN(LH)	!CLK&D&!SE&!SI	0.0100	n/a	n/a	-0.0713
RN(LH)	!CLK&D&!SE&SI	0.0100	n/a	n/a	-0.0713
RN(LH)	!CLK&D&SE&!SI	0.0100	n/a	n/a	-0.0766
RN(LH)	!CLK&D&SE&SI	0.0100	n/a	n/a	-0.0713
RN(LH)	CLK&!D&!SE&!SI	0.0100	n/a	n/a	-0.0766
RN(LH)	CLK&!D&!SE&SI	0.0100	n/a	n/a	-0.0766
RN(LH)	CLK&!D&SE&!SI	0.0100	n/a	n/a	-0.0766
RN(LH)	CLK&!D&SE&SI	0.0100	n/a	n/a	-0.0766
RN(LH)	CLK&D&!SE&!SI	0.0100	n/a	n/a	-0.0766
RN(LH)	CLK&D&!SE&SI	0.0100	n/a	n/a	-0.0766
RN(LH)	CLK&D&SE&!SI	0.0100	n/a	n/a	-0.0766
RN(LH)	CLK&D&SE&SI	0.0100	n/a	n/a	-0.0766

LEAKAGE POWER

When Condition	Power (nW)
!CLK&!D&!RN&!SE&!SI	0.4734
!CLK&!D&!RN&!SE&SI	0.4736
!CLK&!D&!RN&SE&!SI	0.5135
!CLK&!D&!RN&SE&SI	0.5390
!CLK&D&!RN&!SE&!SI	0.4675
!CLK&D&!RN&!SE&SI	0.4675
!CLK&D&!RN&SE&!SI	0.5530
!CLK&D&!RN&SE&SI	0.5037
CLK&!D&!RN&!SE&!SI	0.4525
CLK&!D&!RN&!SE&SI	0.4525
CLK&!D&!RN&SE&!SI	0.4535
CLK&!D&!RN&SE&SI	0.4536
CLK&D&!RN&!SE&!SI	0.4527
CLK&D&!RN&!SE&SI	0.4527
CLK&D&!RN&SE&!SI	0.4535
CLK&D&!RN&SE&SI	0.4536
CLK&!D&RN&!SE&!SI	0.4932
CLK&!D&RN&!SE&SI	0.4932
CLK&!D&RN&SE&!SI	0.4941
CLK&D&RN&SE&!SI	0.4941

continues on next page

Table 279 – continued from previous page

CLK&!D&RN&SE&SI	0.7050
CLK&D&RN&!SE&!SI	0.6687
CLK&D&RN&!SE&SI	0.6687
CLK&D&RN&SE&SI	0.6887
!CLK&!D&RN&!SE&!SI	0.4737
!CLK&!D&RN&!SE&SI	0.4739
!CLK&!D&RN&SE&!SI	0.5138
!CLK&!D&RN&SE&SI	0.6779
!CLK&D&RN&!SE&!SI	0.6063
!CLK&D&RN&!SE&SI	0.6063
!CLK&D&RN&SE&!SI	0.5533
!CLK&D&RN&SE&SI	0.6425

gf180mcu_fd_sc_mcu9t5v0__sdffrnq_4

gf180mcu_fd_sc_mcu9t5v0__sdffrnq_4 symbol

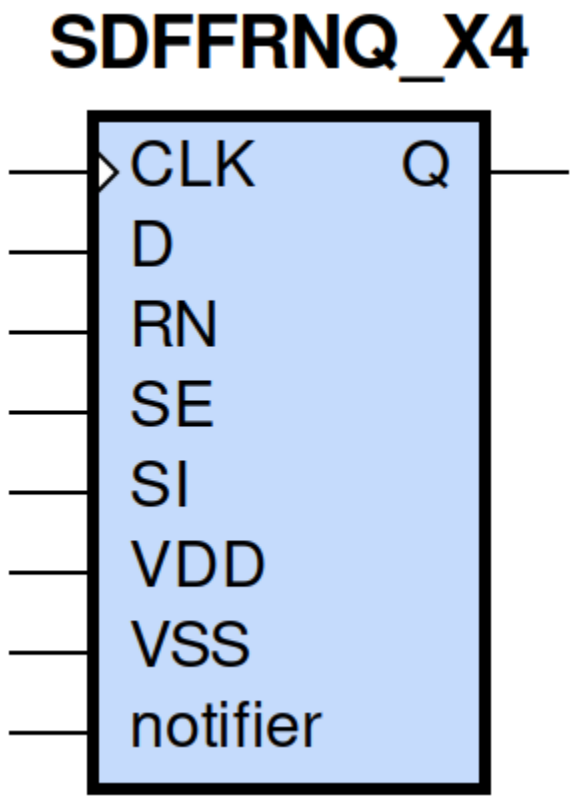

gf180mcu_fd_sc_mcu9t5v0__sdffrnq_4 schematic

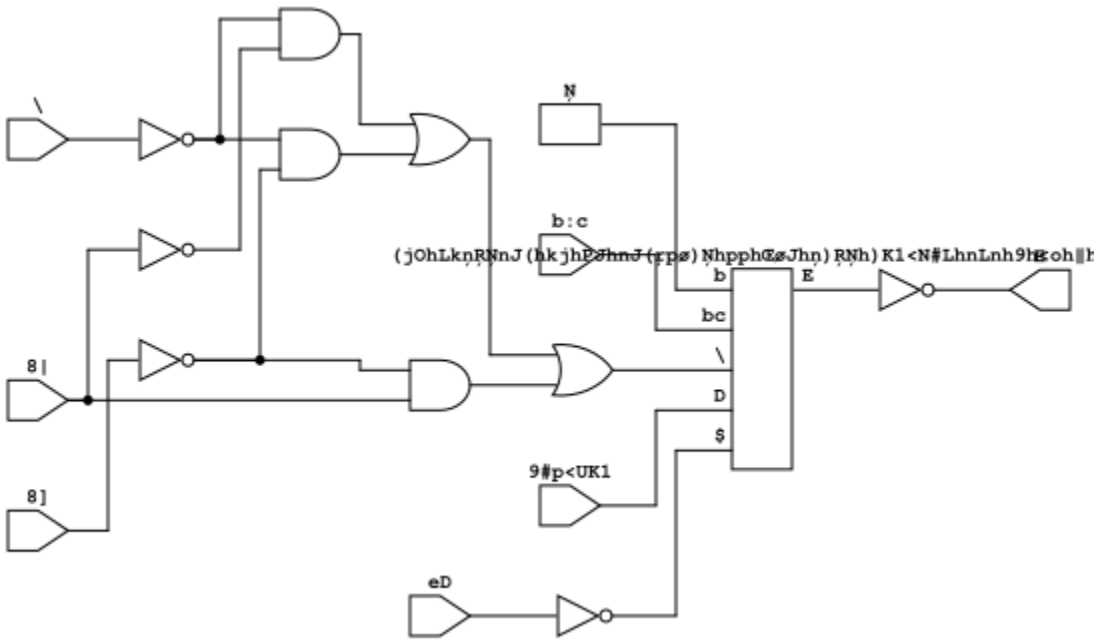

gf180mcu_fd_sc_mcu9t5v0__sdffrnq_4 layout

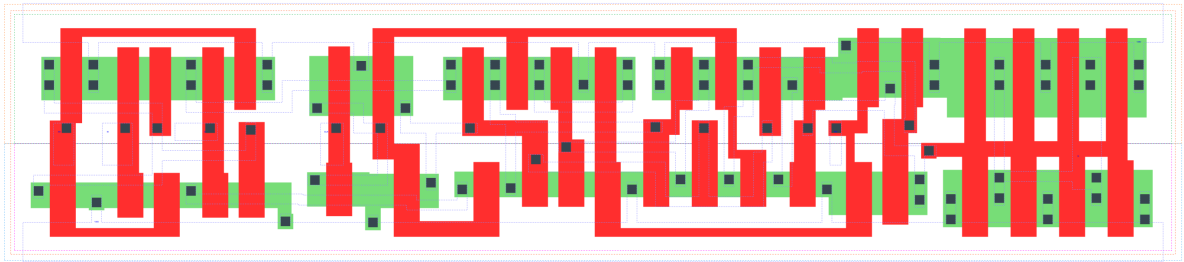

SDFFRNQ_X4 is a positive edge triggered scan D-type flip flop with active low reset and 4X drive strength

Attributes

Attribute	Value
area	132.652800 μm^2

TRUTH TABLE

Input					Output
RN	SE	SI	D	CLK	Q
H	L	X	L	↑	L
H	L	X	H	↑	H
H	H	L	X	↑	L
H	H	H	X	↑	H
L	X	X	X	X	L

FUNCTIONAL SCHEMATIC

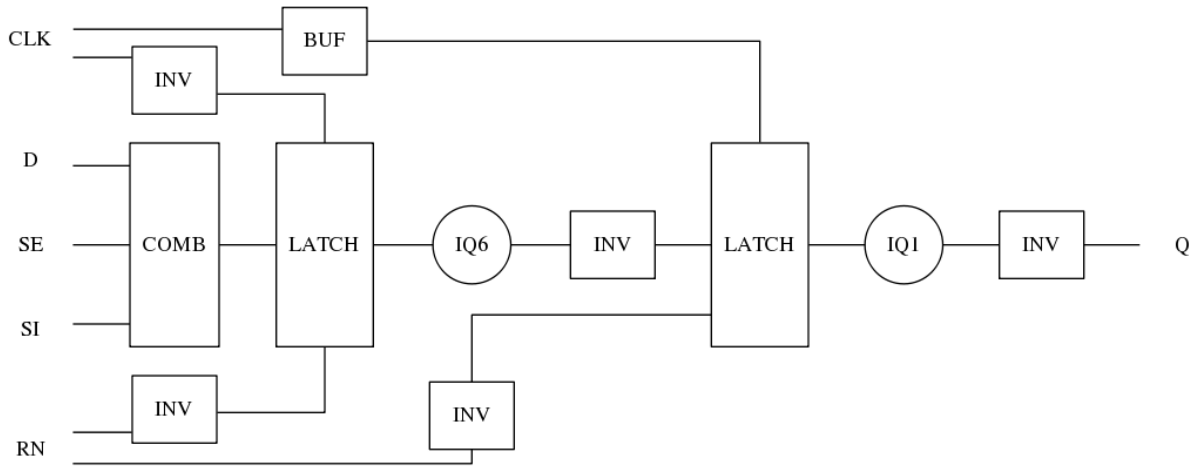

CONSTRAINTS

Constraint Pin	Related Pin	setup(ns)	hold(ns)
SE(LH)	CLK(LH)	0.4640	-0.2060
SE(LH)	CLK(LH)	0.6300	-0.0860
SE(HL)	CLK(LH)	0.5150	-0.0570
SE(HL)	CLK(LH)	0.5380	-0.3030
SI(HL)	CLK(LH)	0.5950	-0.0860
SI(HL)	CLK(LH)	0.6010	-0.0520
SI(LH)	CLK(LH)	0.5100	-0.2520
SI(LH)	CLK(LH)	0.4980	-0.2460
D(HL)	CLK(LH)	0.5040	-0.0400
D(HL)	CLK(LH)	0.5040	-0.0400
D(LH)	CLK(LH)	0.4290	-0.1950
D(LH)	CLK(LH)	0.4290	-0.1950

Constraint Pin	Related Pin	recovery(ns)	removal(ns)
RN(LH)	CLK(LH)	-0.1770	0.3210
RN(LH)	CLK(LH)	-0.1770	0.3210
RN(LH)	CLK(LH)	-0.1770	0.3210
RN(LH)	CLK(LH)	-0.1770	0.3210

Constraint Pin	Related Pin	Minimum Pulse Width(ns)
CLK(HLH)	CLK(HL)	0.6070
CLK(HLH)	CLK(HL)	0.6260
CLK(HLH)	CLK(HL)	0.6080
CLK(HLH)	CLK(HL)	0.5710
CLK(HLH)	CLK(HL)	0.4920
CLK(HLH)	CLK(HL)	0.6930
CLK(HLH)	CLK(HL)	0.4920
CLK(HLH)	CLK(HL)	0.5400
CLK(LHL)	CLK(LH)	0.4460
CLK(LHL)	CLK(LH)	0.4460
CLK(LHL)	CLK(LH)	0.4460
CLK(LHL)	CLK(LH)	0.4560
CLK(LHL)	CLK(LH)	0.4560
CLK(LHL)	CLK(LH)	0.4460
CLK(LHL)	CLK(LH)	0.4560
CLK(LHL)	CLK(LH)	0.4560
RN(HLH)	RN(HL)	0.3980
RN(HLH)	RN(HL)	0.3980
RN(HLH)	RN(HL)	0.3980
RN(HLH)	RN(HL)	0.3980
RN(HLH)	RN(HL)	0.3680
RN(HLH)	RN(HL)	0.3680
RN(HLH)	RN(HL)	0.3680
RN(HLH)	RN(HL)	0.3680
RN(HLH)	RN(HL)	0.3980
RN(HLH)	RN(HL)	0.3980
RN(HLH)	RN(HL)	0.3980
RN(HLH)	RN(HL)	0.3680
RN(HLH)	RN(HL)	0.3680
RN(HLH)	RN(HL)	0.3680
RN(HLH)	RN(HL)	0.3680
RN(HLH)	RN(HL)	0.3980

PIN CAPACITANCE (pf)

Pin	Type	Capacitance (pf)
SE	input	0.0085
SI	input	0.0039
D	input	0.0040
CLK	input	0.0050
RN	input	0.0095

DELAY AND OUTPUT TRANSITION TIME corresponding to min slew and load

Input Pin	Output	When Condition	Tin (ns)	Out Load (pf)	Delay (ns)	Tout (ns)
CLK(LH)	Q(HL)	!D&RN&!SE&!SI	0.0100	0.0010	0.6539	0.0485
CLK(LH)	Q(HL)	!D&RN&!SE&SI	0.0100	0.0010	0.6540	0.0487
CLK(LH)	Q(HL)	!D&RN&SE&!SI	0.0100	0.0010	0.6541	0.0487
CLK(LH)	Q(HL)	D&RN&SE&!SI	0.0100	0.0010	0.6540	0.0486
CLK(LH)	Q(LH)	!D&RN&SE&SI	0.0100	0.0010	0.7031	0.0498
CLK(LH)	Q(LH)	D&RN&!SE&!SI	0.0100	0.0010	0.7031	0.0500
CLK(LH)	Q(LH)	D&RN&!SE&SI	0.0100	0.0010	0.7031	0.0497
CLK(LH)	Q(LH)	D&RN&SE&SI	0.0100	0.0010	0.7030	0.0496
RN(HL)	Q(HL)	!CLK&!D&!SE&!SI	0.0100	0.0010	0.2948	0.0505
RN(HL)	Q(HL)	!CLK&D&SE&!SI	0.0100	0.0010	0.2948	0.0506
RN(HL)	Q(HL)	!CLK&D&!SE&SI	0.0100	0.0010	0.2948	0.0505
RN(HL)	Q(HL)	!CLK&D&SE&SI	0.0100	0.0010	0.2948	0.0505
RN(HL)	Q(HL)	CLK&D&!SE&!SI	0.0100	0.0010	0.2948	0.0507
RN(HL)	Q(HL)	CLK&D&SE&!SI	0.0100	0.0010	0.2948	0.0507
RN(HL)	Q(HL)	CLK&D&!SE&SI	0.0100	0.0010	0.2948	0.0507
RN(HL)	Q(HL)	CLK&D&SE&SI	0.0100	0.0010	0.2948	0.0507
RN(HL)	Q(HL)	!CLK&!D&SE&!SI	0.0100	0.0010	0.2948	0.0506
RN(HL)	Q(HL)	!CLK&!D&!SE&SI	0.0100	0.0010	0.2948	0.0506
RN(HL)	Q(HL)	!CLK&!D&SE&SI	0.0100	0.0010	0.2948	0.0505
RN(HL)	Q(HL)	CLK&!D&!SE&!SI	0.0100	0.0010	0.2948	0.0507
RN(HL)	Q(HL)	CLK&!D&SE&!SI	0.0100	0.0010	0.2948	0.0507
RN(HL)	Q(HL)	CLK&!D&!SE&SI	0.0100	0.0010	0.2948	0.0507
RN(HL)	Q(HL)	CLK&!D&SE&SI	0.0100	0.0010	0.2948	0.0507
RN(HL)	Q(HL)	!CLK&D&!SE&!SI	0.0100	0.0010	0.2948	0.0505

DYNAMIC ENERGY

Input Pin	When Condition	Tin (ns)	Output	Out Load (pf)	Energy (uW/MHz)
CLK	!D&RN&!SE&!SI	0.0100	Q(HL)	0.0010	1.6327
CLK	!D&RN&!SE&SI	0.0100	Q(HL)	0.0010	1.6334
CLK	!D&RN&SE&!SI	0.0100	Q(HL)	0.0010	1.6334
CLK	D&RN&SE&!SI	0.0100	Q(HL)	0.0010	1.6330
CLK	!D&RN&SE&SI	0.0100	Q(LH)	0.0010	1.6206

continues on next page

Table 281 – continued from previous page

CLK	D&RN&!SE&!SI	0.0100	Q(LH)	0.0010	1.6209
CLK	D&RN&!SE&SI	0.0100	Q(LH)	0.0010	1.6208
CLK	D&RN&SE&SI	0.0100	Q(LH)	0.0010	1.6208
RN	!CLK&!D&!SE&!SI	0.0100	Q(HL)	0.0010	1.4132
RN	!CLK&D&SE&!SI	0.0100	Q(HL)	0.0010	1.4133
RN	!CLK&D&!SE&SI	0.0100	Q(HL)	0.0010	1.4345
RN	!CLK&D&SE&SI	0.0100	Q(HL)	0.0010	1.4345
RN	CLK&D&!SE&!SI	0.0100	Q(HL)	0.0010	1.7330
RN	CLK&D&SE&!SI	0.0100	Q(HL)	0.0010	1.7330
RN	CLK&D&!SE&SI	0.0100	Q(HL)	0.0010	1.7330
RN	CLK&D&SE&SI	0.0100	Q(HL)	0.0010	1.7330
RN	!CLK&!D&SE&!SI	0.0100	Q(HL)	0.0010	1.4133
RN	!CLK&!D&!SE&SI	0.0100	Q(HL)	0.0010	1.4133
RN	!CLK&!D&SE&SI	0.0100	Q(HL)	0.0010	1.4345
RN	CLK&!D&!SE&!SI	0.0100	Q(HL)	0.0010	1.7331
RN	CLK&!D&SE&!SI	0.0100	Q(HL)	0.0010	1.7331
RN	CLK&!D&!SE&SI	0.0100	Q(HL)	0.0010	1.7331
RN	CLK&!D&SE&SI	0.0100	Q(HL)	0.0010	1.7330
RN	!CLK&D&!SE&!SI	0.0100	Q(HL)	0.0010	1.4345
D(HL)	!CLK&!RN&!SE&!SI	0.0100	n/a	n/a	0.4225
D(HL)	!CLK&!RN&!SE&SI	0.0100	n/a	n/a	0.4225
D(HL)	!CLK&!RN&SE&!SI	0.0100	n/a	n/a	0.0330
D(HL)	!CLK&!RN&SE&SI	0.0100	n/a	n/a	0.0153
D(HL)	CLK&!RN&!SE&!SI	0.0100	n/a	n/a	0.0370
D(HL)	CLK&!RN&!SE&SI	0.0100	n/a	n/a	0.0370
D(HL)	CLK&!RN&SE&!SI	0.0100	n/a	n/a	0.0395
D(HL)	CLK&!RN&SE&SI	0.0100	n/a	n/a	0.0166
D(HL)	CLK&RN&!SE&!SI	0.0100	n/a	n/a	0.0649
D(HL)	CLK&RN&SE&!SI	0.0100	n/a	n/a	0.0321
D(HL)	CLK&RN&!SE&SI	0.0100	n/a	n/a	0.0649
D(HL)	CLK&RN&SE&SI	0.0100	n/a	n/a	0.0137
D(HL)	!CLK&RN&!SE&!SI	0.0100	n/a	n/a	0.4034
D(HL)	!CLK&RN&SE&!SI	0.0100	n/a	n/a	0.0330
D(HL)	!CLK&RN&!SE&SI	0.0100	n/a	n/a	0.4034
D(HL)	!CLK&RN&SE&SI	0.0100	n/a	n/a	0.0153
SE(LH)	!CLK&!D&!RN&!SI	0.0100	n/a	n/a	0.0032
SE(LH)	!CLK&!D&!RN&SI	0.0100	n/a	n/a	0.2727
SE(LH)	!CLK&D&!RN&!SI	0.0100	n/a	n/a	0.4532
SE(LH)	!CLK&D&!RN&SI	0.0100	n/a	n/a	-0.0119
SE(LH)	CLK&!D&!RN&!SI	0.0100	n/a	n/a	0.0000
SE(LH)	CLK&!D&!RN&SI	0.0100	n/a	n/a	-0.0087
SE(LH)	CLK&D&!RN&!SI	0.0100	n/a	n/a	0.0010
SE(LH)	CLK&D&!RN&SI	0.0100	n/a	n/a	-0.0128
SE(LH)	!CLK&D&RN&!SI	0.0100	n/a	n/a	0.4331
SE(LH)	!CLK&D&RN&SI	0.0100	n/a	n/a	-0.0119
SE(LH)	CLK&D&RN&!SI	0.0100	n/a	n/a	0.0363
SE(LH)	CLK&D&RN&SI	0.0100	n/a	n/a	-0.0154
SE(LH)	!CLK&!D&RN&!SI	0.0100	n/a	n/a	0.0033
SE(LH)	!CLK&!D&RN&SI	0.0100	n/a	n/a	0.2834
SE(LH)	CLK&!D&RN&!SI	0.0100	n/a	n/a	0.0000
SE(LH)	CLK&!D&RN&SI	0.0100	n/a	n/a	-0.0087
CLK(LH)	!D&!RN&!SE&!SI	0.0100	n/a	n/a	0.2943

continues on next page

Table 281 – continued from previous page

CLK(LH)	!D&!RN&!SE&SI	0.0100	n/a	n/a	0.2940
CLK(LH)	!D&!RN&SE&!SI	0.0100	n/a	n/a	0.2943
CLK(LH)	!D&!RN&SE&SI	0.0100	n/a	n/a	0.6303
CLK(LH)	D&!RN&!SE&!SI	0.0100	n/a	n/a	0.6302
CLK(LH)	D&!RN&!SE&SI	0.0100	n/a	n/a	0.6299
CLK(LH)	D&!RN&SE&!SI	0.0100	n/a	n/a	0.2943
CLK(LH)	D&!RN&SE&SI	0.0100	n/a	n/a	0.6302
CLK(LH)	D&RN&!SE&!SI	0.0100	n/a	n/a	0.2866
CLK(LH)	D&RN&SE&!SI	0.0100	n/a	n/a	0.2939
CLK(LH)	D&RN&!SE&SI	0.0100	n/a	n/a	0.2867
CLK(LH)	D&RN&SE&SI	0.0100	n/a	n/a	0.2868
CLK(LH)	!D&RN&!SE&!SI	0.0100	n/a	n/a	0.2939
CLK(LH)	!D&RN&SE&!SI	0.0100	n/a	n/a	0.2939
CLK(LH)	!D&RN&!SE&SI	0.0100	n/a	n/a	0.2939
CLK(LH)	!D&RN&SE&SI	0.0100	n/a	n/a	0.2869
SI(LH)	!CLK&!D&!RN&!SE	0.0100	n/a	n/a	-0.0315
SI(LH)	!CLK&!D&!RN&SE	0.0100	n/a	n/a	0.2739
SI(LH)	!CLK&D&!RN&!SE	0.0100	n/a	n/a	-0.0293
SI(LH)	!CLK&D&!RN&SE	0.0100	n/a	n/a	0.2539
SI(LH)	CLK&!D&!RN&!SE	0.0100	n/a	n/a	-0.0315
SI(LH)	CLK&!D&!RN&SE	0.0100	n/a	n/a	-0.0259
SI(LH)	CLK&D&!RN&!SE	0.0100	n/a	n/a	-0.0303
SI(LH)	CLK&D&!RN&SE	0.0100	n/a	n/a	-0.0261
SI(LH)	!CLK&D&RN&!SE	0.0100	n/a	n/a	-0.0293
SI(LH)	!CLK&D&RN&SE	0.0100	n/a	n/a	0.2646
SI(LH)	CLK&D&RN&!SE	0.0100	n/a	n/a	-0.0296
SI(LH)	CLK&D&RN&SE	0.0100	n/a	n/a	-0.0261
SI(LH)	!CLK&!D&RN&!SE	0.0100	n/a	n/a	-0.0315
SI(LH)	!CLK&!D&RN&SE	0.0100	n/a	n/a	0.2845
SI(LH)	CLK&!D&RN&!SE	0.0100	n/a	n/a	-0.0315
SI(LH)	CLK&!D&RN&SE	0.0100	n/a	n/a	-0.0259
SE(HL)	!CLK&!D&!RN&!SI	0.0100	n/a	n/a	0.1929
SE(HL)	!CLK&!D&!RN&SI	0.0100	n/a	n/a	0.6061
SE(HL)	!CLK&D&!RN&!SI	0.0100	n/a	n/a	0.4629
SE(HL)	!CLK&D&!RN&SI	0.0100	n/a	n/a	0.1952
SE(HL)	CLK&!D&!RN&!SI	0.0100	n/a	n/a	0.2007
SE(HL)	CLK&!D&!RN&SI	0.0100	n/a	n/a	0.1971
SE(HL)	CLK&D&!RN&!SI	0.0100	n/a	n/a	0.1964
SE(HL)	CLK&D&!RN&SI	0.0100	n/a	n/a	0.1975
SE(HL)	!CLK&D&RN&!SI	0.0100	n/a	n/a	0.4737
SE(HL)	!CLK&D&RN&SI	0.0100	n/a	n/a	0.1952
SE(HL)	CLK&D&RN&!SI	0.0100	n/a	n/a	0.1985
SE(HL)	CLK&D&RN&SI	0.0100	n/a	n/a	0.1949
SE(HL)	!CLK&!D&RN&!SI	0.0100	n/a	n/a	0.1929
SE(HL)	!CLK&!D&RN&SI	0.0100	n/a	n/a	0.5869
SE(HL)	CLK&!D&RN&!SI	0.0100	n/a	n/a	0.1920
SE(HL)	CLK&!D&RN&SI	0.0100	n/a	n/a	0.2491
CLK(HL)	!D&!RN&!SE&!SI	0.0100	n/a	n/a	0.4379
CLK(HL)	!D&!RN&!SE&SI	0.0100	n/a	n/a	0.4379
CLK(HL)	!D&!RN&SE&!SI	0.0100	n/a	n/a	0.4668
CLK(HL)	!D&!RN&SE&SI	0.0100	n/a	n/a	0.6677
CLK(HL)	D&!RN&!SE&!SI	0.0100	n/a	n/a	0.6242

continues on next page

Table 281 – continued from previous page

CLK(HL)	D&!RN&!SE&SI	0.0100	n/a	n/a	0.6242
CLK(HL)	D&!RN&SE&!SI	0.0100	n/a	n/a	0.4989
CLK(HL)	D&!RN&SE&SI	0.0100	n/a	n/a	0.6458
CLK(HL)	D&RN&!SE&!SI	0.0100	n/a	n/a	0.3825
CLK(HL)	D&RN&SE&!SI	0.0100	n/a	n/a	0.3831
CLK(HL)	D&RN&!SE&SI	0.0100	n/a	n/a	0.3826
CLK(HL)	D&RN&SE&SI	0.0100	n/a	n/a	0.3824
CLK(HL)	!D&RN&!SE&!SI	0.0100	n/a	n/a	0.3829
CLK(HL)	!D&RN&SE&!SI	0.0100	n/a	n/a	0.3831
CLK(HL)	!D&RN&!SE&SI	0.0100	n/a	n/a	0.3830
CLK(HL)	!D&RN&SE&SI	0.0100	n/a	n/a	0.3823
SI(HL)	!CLK&!D&!RN&!SE	0.0100	n/a	n/a	0.0325
SI(HL)	!CLK&!D&!RN&SE	0.0100	n/a	n/a	0.5075
SI(HL)	!CLK&D&!RN&!SE	0.0100	n/a	n/a	0.0321
SI(HL)	!CLK&D&!RN&SE	0.0100	n/a	n/a	0.5188
SI(HL)	CLK&!D&!RN&!SE	0.0100	n/a	n/a	0.0321
SI(HL)	CLK&!D&!RN&SE	0.0100	n/a	n/a	0.0325
SI(HL)	CLK&D&!RN&!SE	0.0100	n/a	n/a	0.0321
SI(HL)	CLK&D&!RN&SE	0.0100	n/a	n/a	0.0323
SI(HL)	!CLK&D&RN&!SE	0.0100	n/a	n/a	0.0321
SI(HL)	!CLK&D&RN&SE	0.0100	n/a	n/a	0.4987
SI(HL)	CLK&D&RN&!SE	0.0100	n/a	n/a	0.0320
SI(HL)	CLK&D&RN&SE	0.0100	n/a	n/a	0.0907
SI(HL)	!CLK&!D&RN&!SE	0.0100	n/a	n/a	0.0325
SI(HL)	!CLK&!D&RN&SE	0.0100	n/a	n/a	0.4876
SI(HL)	CLK&!D&RN&!SE	0.0100	n/a	n/a	0.0321
SI(HL)	CLK&!D&RN&SE	0.0100	n/a	n/a	0.1139
D(LH)	!CLK&!RN&!SE&!SI	0.0100	n/a	n/a	0.2376
D(LH)	!CLK&!RN&!SE&SI	0.0100	n/a	n/a	0.2376
D(LH)	!CLK&!RN&SE&!SI	0.0100	n/a	n/a	-0.0286
D(LH)	!CLK&!RN&SE&SI	0.0100	n/a	n/a	-0.0103
D(LH)	CLK&!RN&!SE&!SI	0.0100	n/a	n/a	-0.0276
D(LH)	CLK&!RN&!SE&SI	0.0100	n/a	n/a	-0.0274
D(LH)	CLK&!RN&SE&!SI	0.0100	n/a	n/a	-0.0313
D(LH)	CLK&!RN&SE&SI	0.0100	n/a	n/a	-0.0220
D(LH)	CLK&RN&!SE&!SI	0.0100	n/a	n/a	-0.0276
D(LH)	CLK&RN&SE&!SI	0.0100	n/a	n/a	-0.0313
D(LH)	CLK&RN&!SE&SI	0.0100	n/a	n/a	-0.0274
D(LH)	CLK&RN&SE&SI	0.0100	n/a	n/a	-0.0108
D(LH)	!CLK&RN&!SE&!SI	0.0100	n/a	n/a	0.2484
D(LH)	!CLK&RN&SE&!SI	0.0100	n/a	n/a	-0.0286
D(LH)	!CLK&RN&!SE&SI	0.0100	n/a	n/a	0.2484
D(LH)	!CLK&RN&SE&SI	0.0100	n/a	n/a	-0.0103
RN(HL)	!CLK&!D&!SE&!SI	0.0100	n/a	n/a	0.0819
RN(HL)	!CLK&D&SE&!SI	0.0100	n/a	n/a	0.0819
RN(HL)	!CLK&D&!SE&SI	0.0100	n/a	n/a	0.0806
RN(HL)	!CLK&D&SE&SI	0.0100	n/a	n/a	0.0806
RN(HL)	CLK&D&!SE&!SI	0.0100	n/a	n/a	0.0838
RN(HL)	CLK&D&SE&!SI	0.0100	n/a	n/a	0.0840
RN(HL)	CLK&D&!SE&SI	0.0100	n/a	n/a	0.0838
RN(HL)	CLK&D&SE&SI	0.0100	n/a	n/a	0.0838
RN(HL)	!CLK&!D&SE&!SI	0.0100	n/a	n/a	0.0819

continues on next page

Table 281 – continued from previous page

RN(HL)	!CLK&!D&!SE&SI	0.0100	n/a	n/a	0.0819
RN(HL)	!CLK&!D&SE&SI	0.0100	n/a	n/a	0.0806
RN(HL)	CLK&!D&!SE&!SI	0.0100	n/a	n/a	0.0840
RN(HL)	CLK&!D&SE&!SI	0.0100	n/a	n/a	0.0840
RN(HL)	CLK&!D&!SE&SI	0.0100	n/a	n/a	0.0840
RN(HL)	CLK&!D&SE&SI	0.0100	n/a	n/a	0.0838
RN(HL)	!CLK&D&!SE&!SI	0.0100	n/a	n/a	0.0806
RN(LH)	!CLK&!D&!SE&!SI	0.0100	n/a	n/a	-0.0767
RN(LH)	!CLK&!D&!SE&SI	0.0100	n/a	n/a	-0.0767
RN(LH)	!CLK&!D&SE&!SI	0.0100	n/a	n/a	-0.0767
RN(LH)	!CLK&!D&SE&SI	0.0100	n/a	n/a	-0.0714
RN(LH)	!CLK&D&!SE&!SI	0.0100	n/a	n/a	-0.0714
RN(LH)	!CLK&D&!SE&SI	0.0100	n/a	n/a	-0.0714
RN(LH)	!CLK&D&SE&!SI	0.0100	n/a	n/a	-0.0767
RN(LH)	!CLK&D&SE&SI	0.0100	n/a	n/a	-0.0714
RN(LH)	CLK&!D&!SE&!SI	0.0100	n/a	n/a	-0.0767
RN(LH)	CLK&!D&!SE&SI	0.0100	n/a	n/a	-0.0767
RN(LH)	CLK&!D&SE&!SI	0.0100	n/a	n/a	-0.0767
RN(LH)	CLK&!D&SE&SI	0.0100	n/a	n/a	-0.0767
RN(LH)	CLK&D&!SE&!SI	0.0100	n/a	n/a	-0.0767
RN(LH)	CLK&D&!SE&SI	0.0100	n/a	n/a	-0.0767
RN(LH)	CLK&D&SE&!SI	0.0100	n/a	n/a	-0.0767
RN(LH)	CLK&D&SE&SI	0.0100	n/a	n/a	-0.0767

LEAKAGE POWER

When Condition	Power (nW)
!CLK&!D&!RN&!SE&!SI	0.5269
!CLK&!D&!RN&!SE&SI	0.5270
!CLK&!D&!RN&SE&!SI	0.5670
!CLK&!D&!RN&SE&SI	0.5927
!CLK&D&!RN&!SE&!SI	0.5211
!CLK&D&!RN&!SE&SI	0.5211
!CLK&D&!RN&SE&!SI	0.6065
!CLK&D&!RN&SE&SI	0.5574
CLK&!D&!RN&!SE&!SI	0.5062
CLK&!D&!RN&!SE&SI	0.5062
CLK&!D&!RN&SE&!SI	0.5072
CLK&!D&!RN&SE&SI	0.5075
CLK&D&!RN&!SE&!SI	0.5065
CLK&D&!RN&!SE&SI	0.5066
CLK&D&!RN&SE&!SI	0.5072
CLK&D&!RN&SE&SI	0.5075
CLK&!D&RN&!SE&!SI	0.5469
CLK&!D&RN&!SE&SI	0.5469
CLK&!D&RN&SE&!SI	0.5478
CLK&D&RN&SE&!SI	0.5478

continues on next page

Table 282 – continued from previous page

CLK&!D&RN&SE&SI	0.7553
CLK&D&RN&!SE&!SI	0.7192
CLK&D&RN&!SE&SI	0.7193
CLK&D&RN&SE&SI	0.7391
!CLK&!D&RN&!SE&!SI	0.5271
!CLK&!D&RN&!SE&SI	0.5273
!CLK&!D&RN&SE&!SI	0.5673
!CLK&!D&RN&SE&SI	0.7323
!CLK&D&RN&!SE&!SI	0.6607
!CLK&D&RN&!SE&SI	0.6607
!CLK&D&RN&SE&!SI	0.6067
!CLK&D&RN&SE&SI	0.6969

gf180mcu_fd_sc_mcu9t5v0__sdffrsnq_1

gf180mcu_fd_sc_mcu9t5v0__sdffrsnq_1 symbol

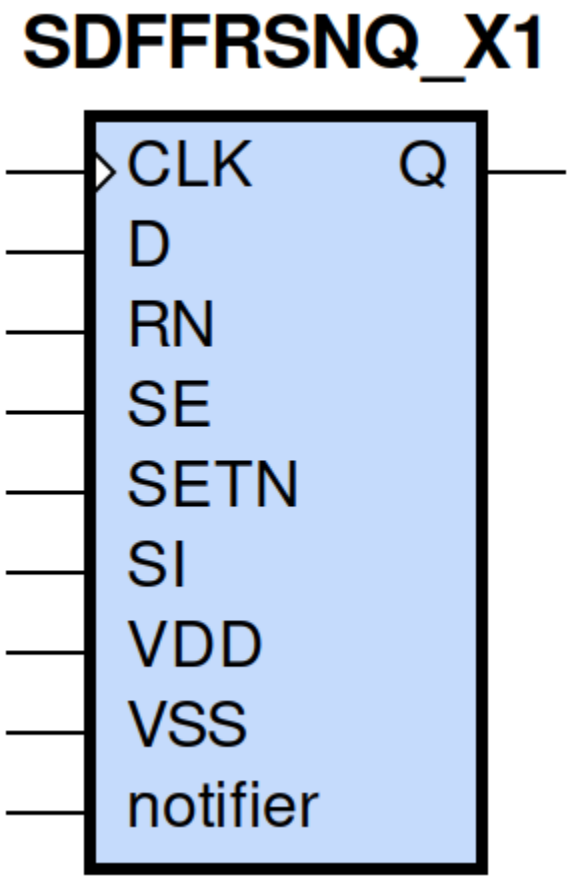

gf180mcu_fd_sc_mcu9t5v0__sdffrsnq_1 schematic

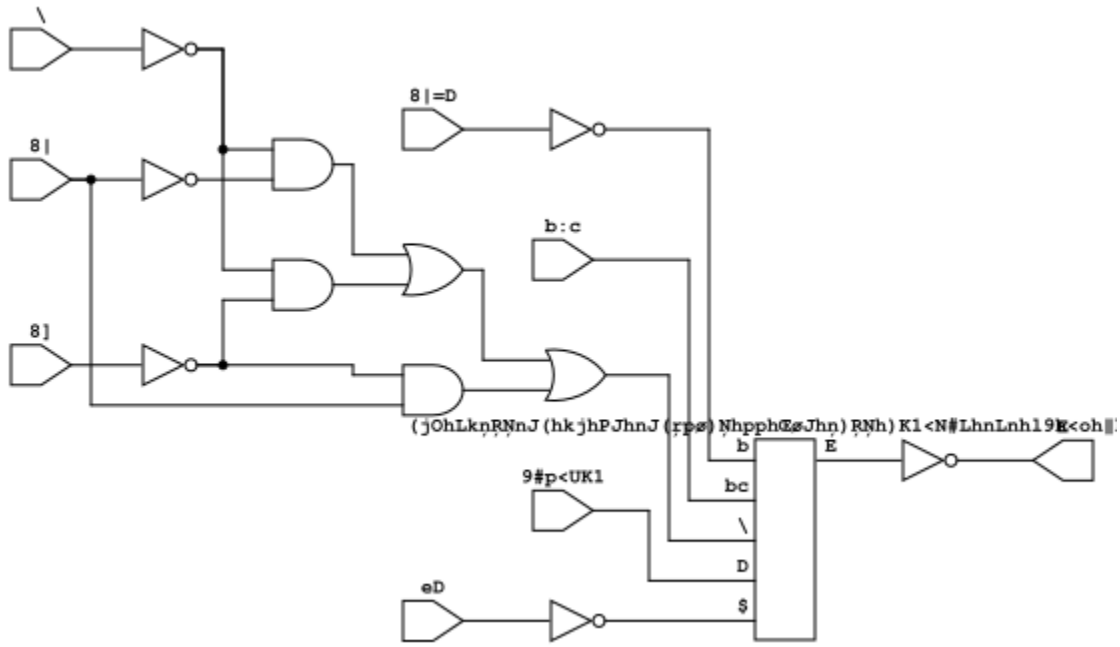

gf180mcu_fd_sc_mcu9t5v0__sdffrsnq_1 layout

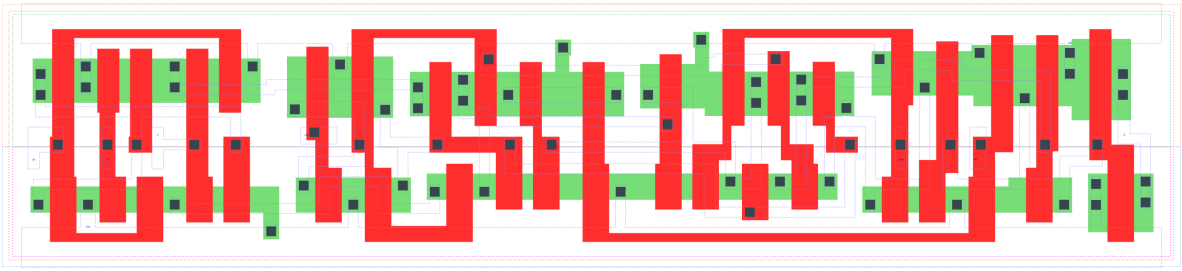

SDFFRSNQ_X1 is a positive edge triggered scan D-type flip flop with active low reset and 1X drive strength

Attributes

Attribute	Value
area	129.830400 μm^2

TRUTH TABLE

Input						Output
RN	SETN	SE	SI	D	CLK	Q
H	H	L	X	L	↑	L
H	H	L	X	H	↑	H
H	H	H	L	X	↑	L
H	H	H	H	X	↑	H
H	L	X	X	X	X	H
L	H	X	X	X	X	L
L	L	X	X	X	X	L

FUNCTIONAL SCHEMATIC

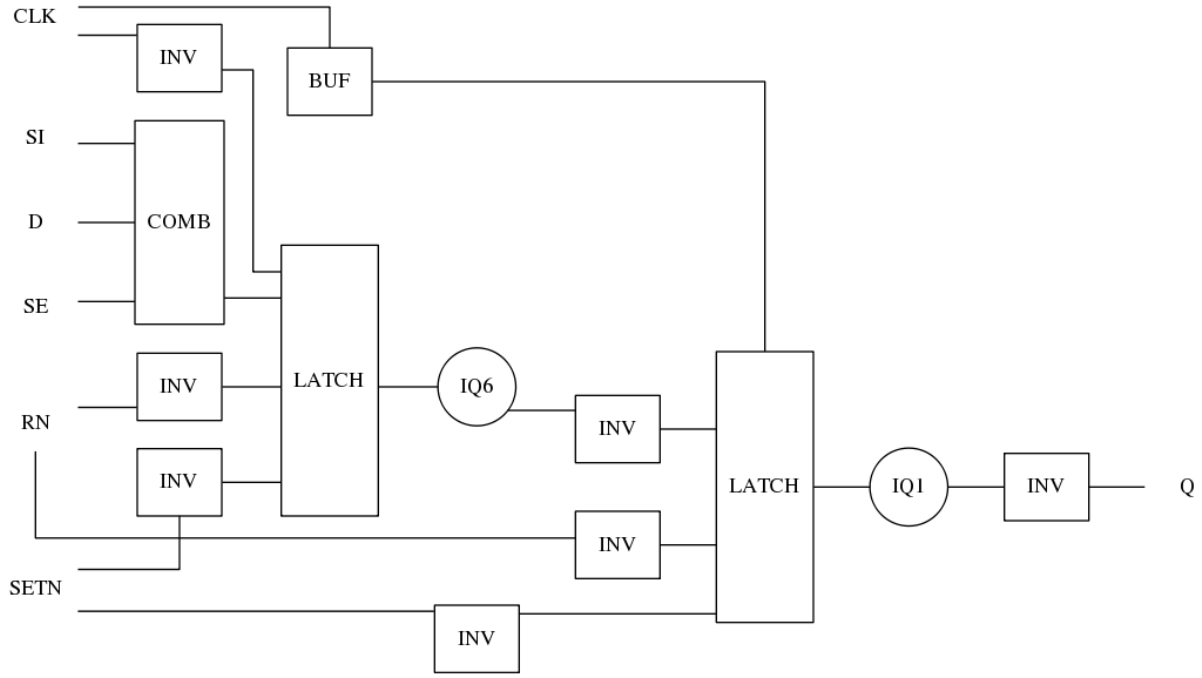

CONSTRAINTS

Constraint Pin	Related Pin	setup(ns)	hold(ns)
SE(LH)	CLK(LH)	0.4920	-0.1950
SE(LH)	CLK(LH)	0.6760	-0.0920
SE(HL)	CLK(LH)	0.5610	-0.0570
SE(HL)	CLK(LH)	0.5670	-0.2920
SI(HL)	CLK(LH)	0.6410	-0.0920
SI(HL)	CLK(LH)	0.6470	-0.0570
SI(LH)	CLK(LH)	0.5380	-0.2400

continues on next page

Table 283 – continued from previous page

SI(LH)	CLK(LH)	0.5210	-0.2350
D(HL)	CLK(LH)	0.5440	-0.0460
D(HL)	CLK(LH)	0.5440	-0.0460
D(LH)	CLK(LH)	0.4580	-0.1890
D(LH)	CLK(LH)	0.4580	-0.1890
SETN(LH)	RN(LH)	-0.0060	0.0800
SETN(LH)	RN(LH)	-0.0060	0.0800
SETN(LH)	RN(LH)	-0.0060	0.0800
SETN(LH)	RN(LH)	-0.0060	0.0800
SETN(LH)	RN(LH)	-0.0400	0.0970
SETN(LH)	RN(LH)	-0.0400	0.0970
SETN(LH)	RN(LH)	-0.0400	0.0970
SETN(LH)	RN(LH)	-0.0400	0.0970
SETN(LH)	RN(LH)	-0.0060	0.0800
SETN(LH)	RN(LH)	-0.0060	0.0800
SETN(LH)	RN(LH)	-0.0060	0.0800
SETN(LH)	RN(LH)	-0.0400	0.0970
SETN(LH)	RN(LH)	-0.0400	0.0970
SETN(LH)	RN(LH)	-0.0400	0.0970
SETN(LH)	RN(LH)	-0.0400	0.0970
SETN(LH)	RN(LH)	-0.0060	0.0800
RN(LH)	SETN(LH)	0.0800	-0.0060
RN(LH)	SETN(LH)	0.0800	-0.0060
RN(LH)	SETN(LH)	0.0800	-0.0060
RN(LH)	SETN(LH)	0.0800	-0.0060
RN(LH)	SETN(LH)	0.0970	-0.0400
RN(LH)	SETN(LH)	0.0970	-0.0400
RN(LH)	SETN(LH)	0.0970	-0.0400
RN(LH)	SETN(LH)	0.0970	-0.0400
RN(LH)	SETN(LH)	0.0800	-0.0060
RN(LH)	SETN(LH)	0.0800	-0.0060
RN(LH)	SETN(LH)	0.0800	-0.0060
RN(LH)	SETN(LH)	0.0970	-0.0400
RN(LH)	SETN(LH)	0.0970	-0.0400
RN(LH)	SETN(LH)	0.0970	-0.0400
RN(LH)	SETN(LH)	0.0970	-0.0400
RN(LH)	SETN(LH)	0.0800	-0.0060

Constraint Pin	Related Pin	recovery(ns)	removal(ns)
SETN(LH)	CLK(LH)	0.0170	0.2180
SETN(LH)	CLK(LH)	0.0170	0.2180
SETN(LH)	CLK(LH)	0.0170	0.2180
SETN(LH)	CLK(LH)	0.0170	0.2180
RN(LH)	CLK(LH)	-0.2060	0.3550
RN(LH)	CLK(LH)	-0.2060	0.3550
RN(LH)	CLK(LH)	-0.2060	0.3550
RN(LH)	CLK(LH)	-0.2060	0.3550

Constraint Pin	Related Pin	Minimum Pulse Width(ns)
CLK(HLH)	CLK(HL)	0.6750
CLK(HLH)	CLK(HL)	0.7050
CLK(HLH)	CLK(HL)	0.6750
CLK(HLH)	CLK(HL)	0.6080
CLK(HLH)	CLK(HL)	0.5400
CLK(HLH)	CLK(HL)	0.7660
CLK(HLH)	CLK(HL)	0.5400
CLK(HLH)	CLK(HL)	0.5710
CLK(LHL)	CLK(LH)	0.3780
CLK(LHL)	CLK(LH)	0.3780
CLK(LHL)	CLK(LH)	0.3780
CLK(LHL)	CLK(LH)	0.3980
CLK(LHL)	CLK(LH)	0.3980
CLK(LHL)	CLK(LH)	0.3780
CLK(LHL)	CLK(LH)	0.3980
CLK(LHL)	CLK(LH)	0.3980
SETN(HLH)	SETN(HL)	0.3780
SETN(HLH)	SETN(HL)	0.3780
SETN(HLH)	SETN(HL)	0.3780
SETN(HLH)	SETN(HL)	0.3780
SETN(HLH)	SETN(HL)	0.3980
SETN(HLH)	SETN(HL)	0.3980
SETN(HLH)	SETN(HL)	0.3980
SETN(HLH)	SETN(HL)	0.3980
SETN(HLH)	SETN(HL)	0.3780
SETN(HLH)	SETN(HL)	0.3780
SETN(HLH)	SETN(HL)	0.3780
SETN(HLH)	SETN(HL)	0.3980
SETN(HLH)	SETN(HL)	0.3980
SETN(HLH)	SETN(HL)	0.3980
SETN(HLH)	SETN(HL)	0.3980
SETN(HLH)	SETN(HL)	0.3780
RN(HLH)	RN(HL)	0.2800
RN(HLH)	RN(HL)	0.2800
RN(HLH)	RN(HL)	0.2800
RN(HLH)	RN(HL)	0.2800
RN(HLH)	RN(HL)	0.3880
RN(HLH)	RN(HL)	0.3880
RN(HLH)	RN(HL)	0.3880
RN(HLH)	RN(HL)	0.3880
RN(HLH)	RN(HL)	0.2800
RN(HLH)	RN(HL)	0.2800
RN(HLH)	RN(HL)	0.2800
RN(HLH)	RN(HL)	0.3880
RN(HLH)	RN(HL)	0.3880
RN(HLH)	RN(HL)	0.3880
RN(HLH)	RN(HL)	0.3880
RN(HLH)	RN(HL)	0.2800

continues on next page

Table 284 – continued from previous page

PIN CAPACITANCE (pf)

Pin	Type	Capacitance (pf)
SE	input	0.0084
SI	input	0.0038
D	input	0.0040
CLK	input	0.0050
SETN	input	0.0085
RN	input	0.0094

DELAY AND OUTPUT TRANSITION TIME corresponding to min slew and load

Input Pin	Output	When Condition	Tin (ns)	Out Load (pf)	Delay (ns)	Tout (ns)
CLK(LH)	Q(HL)	!D&RN&!SE&SETN&!SI	0.0100	0.0010	0.5824	0.0372
CLK(LH)	Q(HL)	!D&RN&!SE&SETN&SI	0.0100	0.0010	0.5824	0.0372
CLK(LH)	Q(HL)	!D&RN&SE&SETN&!SI	0.0100	0.0010	0.5825	0.0371
CLK(LH)	Q(HL)	D&RN&SE&SETN&!SI	0.0100	0.0010	0.5824	0.0371
CLK(LH)	Q(LH)	!D&RN&SE&SETN&SI	0.0100	0.0010	0.6185	0.0482
CLK(LH)	Q(LH)	D&RN&!SE&SETN&!SI	0.0100	0.0010	0.6186	0.0481
CLK(LH)	Q(LH)	D&RN&!SE&SETN&SI	0.0100	0.0010	0.6184	0.0482
CLK(LH)	Q(LH)	D&RN&SE&SETN&SI	0.0100	0.0010	0.6184	0.0483
SETN(HL)	Q(LH)	!CLK&!D&RN&!SE&!SI	0.0100	0.0010	0.5363	0.0479
SETN(HL)	Q(LH)	!CLK&D&RN&SE&!SI	0.0100	0.0010	0.5363	0.0479
SETN(HL)	Q(LH)	!CLK&D&RN&!SE&SI	0.0100	0.0010	0.5367	0.0480
SETN(HL)	Q(LH)	!CLK&D&RN&SE&SI	0.0100	0.0010	0.5367	0.0480
SETN(HL)	Q(LH)	CLK&D&RN&!SE&!SI	0.0100	0.0010	0.5801	0.0476
SETN(HL)	Q(LH)	CLK&D&RN&SE&!SI	0.0100	0.0010	0.5802	0.0480
SETN(HL)	Q(LH)	CLK&D&RN&!SE&SI	0.0100	0.0010	0.5801	0.0476
SETN(HL)	Q(LH)	CLK&D&RN&SE&SI	0.0100	0.0010	0.5802	0.0476
SETN(HL)	Q(LH)	!CLK&!D&RN&SE&!SI	0.0100	0.0010	0.5363	0.0479
SETN(HL)	Q(LH)	!CLK&!D&RN&!SE&SI	0.0100	0.0010	0.5363	0.0479
SETN(HL)	Q(LH)	!CLK&!D&RN&SE&SI	0.0100	0.0010	0.5367	0.0480
SETN(HL)	Q(LH)	CLK&!D&RN&!SE&!SI	0.0100	0.0010	0.5802	0.0480
SETN(HL)	Q(LH)	CLK&!D&RN&SE&!SI	0.0100	0.0010	0.5802	0.0480
SETN(HL)	Q(LH)	CLK&!D&RN&!SE&SI	0.0100	0.0010	0.5802	0.0480
SETN(HL)	Q(LH)	CLK&!D&RN&SE&SI	0.0100	0.0010	0.5802	0.0476
SETN(HL)	Q(LH)	!CLK&D&RN&!SE&!SI	0.0100	0.0010	0.5367	0.0480
RN(HL)	Q(HL)	!CLK&!D&!SE&SETN&!SI	0.0100	0.0010	0.1782	0.0355
RN(HL)	Q(HL)	!CLK&D&SE&SETN&!SI	0.0100	0.0010	0.1782	0.0355
RN(HL)	Q(HL)	!CLK&D&!SE&SETN&SI	0.0100	0.0010	0.1781	0.0355
RN(HL)	Q(HL)	!CLK&D&SE&SETN&SI	0.0100	0.0010	0.1781	0.0355
RN(HL)	Q(HL)	CLK&D&!SE&SETN&!SI	0.0100	0.0010	0.1783	0.0354

continues on next page

Table 285 – continued from previous page

RN(HL)	Q(HL)	CLK&D&SE&SETN&!SI	0.0100	0.0010	0.1783	0.0354
RN(HL)	Q(HL)	CLK&D&!SE&SETN&SI	0.0100	0.0010	0.1783	0.0354
RN(HL)	Q(HL)	CLK&D&SE&SETN&SI	0.0100	0.0010	0.1783	0.0354
RN(HL)	Q(HL)	!CLK&!D&!SE&!SETN&!SI	0.0100	0.0010	0.1782	0.0350
RN(HL)	Q(HL)	!CLK&!D&!SE&!SETN&SI	0.0100	0.0010	0.1782	0.0350
RN(HL)	Q(HL)	!CLK&!D&SE&!SETN&!SI	0.0100	0.0010	0.1782	0.0350
RN(HL)	Q(HL)	!CLK&!D&SE&!SETN&SI	0.0100	0.0010	0.1781	0.0351
RN(HL)	Q(HL)	!CLK&D&!SE&!SETN&!SI	0.0100	0.0010	0.1781	0.0351
RN(HL)	Q(HL)	!CLK&D&!SE&!SETN&SI	0.0100	0.0010	0.1781	0.0351
RN(HL)	Q(HL)	!CLK&D&SE&!SETN&!SI	0.0100	0.0010	0.1782	0.0350
RN(HL)	Q(HL)	!CLK&D&SE&!SETN&SI	0.0100	0.0010	0.1781	0.0351
RN(HL)	Q(HL)	CLK&!D&!SE&!SETN&!SI	0.0100	0.0010	0.1783	0.0351
RN(HL)	Q(HL)	CLK&!D&!SE&!SETN&SI	0.0100	0.0010	0.1783	0.0351
RN(HL)	Q(HL)	CLK&!D&SE&!SETN&!SI	0.0100	0.0010	0.1783	0.0351
RN(HL)	Q(HL)	CLK&!D&SE&!SETN&SI	0.0100	0.0010	0.1783	0.0351
RN(HL)	Q(HL)	CLK&D&!SE&!SETN&!SI	0.0100	0.0010	0.1783	0.0351
RN(HL)	Q(HL)	CLK&D&!SE&!SETN&SI	0.0100	0.0010	0.1783	0.0351
RN(HL)	Q(HL)	CLK&D&SE&!SETN&!SI	0.0100	0.0010	0.1783	0.0351
RN(HL)	Q(HL)	CLK&D&SE&!SETN&SI	0.0100	0.0010	0.1783	0.0351
RN(HL)	Q(HL)	!CLK&!D&SE&SETN&!SI	0.0100	0.0010	0.1782	0.0355
RN(HL)	Q(HL)	!CLK&!D&!SE&SETN&SI	0.0100	0.0010	0.1782	0.0355
RN(HL)	Q(HL)	!CLK&!D&SE&SETN&SI	0.0100	0.0010	0.1781	0.0355
RN(HL)	Q(HL)	CLK&!D&!SE&SETN&!SI	0.0100	0.0010	0.1783	0.0354
RN(HL)	Q(HL)	CLK&!D&SE&SETN&!SI	0.0100	0.0010	0.1783	0.0354
RN(HL)	Q(HL)	CLK&!D&!SE&SETN&SI	0.0100	0.0010	0.1783	0.0354
RN(HL)	Q(HL)	CLK&!D&SE&SETN&SI	0.0100	0.0010	0.1783	0.0354
RN(HL)	Q(HL)	!CLK&D&!SE&SETN&!SI	0.0100	0.0010	0.1781	0.0355
RN(LH)	Q(LH)	!CLK&!D&!SE&!SETN&!SI	0.0100	0.0010	0.2732	0.0465
RN(LH)	Q(LH)	!CLK&!D&!SE&!SETN&SI	0.0100	0.0010	0.2732	0.0465
RN(LH)	Q(LH)	!CLK&!D&SE&!SETN&!SI	0.0100	0.0010	0.2732	0.0465
RN(LH)	Q(LH)	!CLK&!D&SE&!SETN&SI	0.0100	0.0010	0.2730	0.0462
RN(LH)	Q(LH)	!CLK&D&!SE&!SETN&!SI	0.0100	0.0010	0.2730	0.0465
RN(LH)	Q(LH)	!CLK&D&!SE&!SETN&SI	0.0100	0.0010	0.2730	0.0465
RN(LH)	Q(LH)	!CLK&D&SE&!SETN&!SI	0.0100	0.0010	0.2732	0.0465
RN(LH)	Q(LH)	!CLK&D&SE&!SETN&SI	0.0100	0.0010	0.2730	0.0462
RN(LH)	Q(LH)	CLK&!D&!SE&!SETN&!SI	0.0100	0.0010	0.2754	0.0466
RN(LH)	Q(LH)	CLK&!D&!SE&!SETN&SI	0.0100	0.0010	0.2754	0.0465
RN(LH)	Q(LH)	CLK&!D&SE&!SETN&!SI	0.0100	0.0010	0.2754	0.0465
RN(LH)	Q(LH)	CLK&!D&SE&!SETN&SI	0.0100	0.0010	0.2754	0.0466
RN(LH)	Q(LH)	CLK&D&!SE&!SETN&!SI	0.0100	0.0010	0.2754	0.0466
RN(LH)	Q(LH)	CLK&D&!SE&!SETN&SI	0.0100	0.0010	0.2754	0.0465
RN(LH)	Q(LH)	CLK&D&SE&!SETN&!SI	0.0100	0.0010	0.2754	0.0465
RN(LH)	Q(LH)	CLK&D&SE&!SETN&SI	0.0100	0.0010	0.2754	0.0466

DYNAMIC ENERGY

Input Pin	When Condition	Tin (ns)	Output	Out Load (pf)	Energy (uW/MHz)

continues on next page

Table 286 – continued from previous page

CLK	!D&RN&!SE&SETN&!SI	0.0100	Q(HL)	0.0010	0.8416
CLK	!D&RN&!SE&SETN&SI	0.0100	Q(HL)	0.0010	0.8416
CLK	!D&RN&SE&SETN&!SI	0.0100	Q(HL)	0.0010	0.8415
CLK	D&RN&SE&SETN&!SI	0.0100	Q(HL)	0.0010	0.8415
CLK	!D&RN&SE&SETN&SI	0.0100	Q(LH)	0.0010	0.9131
CLK	D&RN&!SE&SETN&!SI	0.0100	Q(LH)	0.0010	0.9128
CLK	D&RN&!SE&SETN&SI	0.0100	Q(LH)	0.0010	0.9130
CLK	D&RN&SE&SETN&SI	0.0100	Q(LH)	0.0010	0.9132
SETN	!CLK&!D&RN&!SE&!SI	0.0100	Q(LH)	0.0010	0.7550
SETN	!CLK&D&RN&SE&!SI	0.0100	Q(LH)	0.0010	0.7551
SETN	!CLK&D&RN&!SE&SI	0.0100	Q(LH)	0.0010	0.6199
SETN	!CLK&D&RN&SE&SI	0.0100	Q(LH)	0.0010	0.6199
SETN	CLK&D&RN&!SE&!SI	0.0100	Q(LH)	0.0010	0.8945
SETN	CLK&D&RN&SE&!SI	0.0100	Q(LH)	0.0010	0.8948
SETN	CLK&D&RN&!SE&SI	0.0100	Q(LH)	0.0010	0.8945
SETN	CLK&D&RN&SE&SI	0.0100	Q(LH)	0.0010	0.8947
SETN	!CLK&!D&RN&SE&!SI	0.0100	Q(LH)	0.0010	0.7550
SETN	!CLK&!D&RN&!SE&SI	0.0100	Q(LH)	0.0010	0.7550
SETN	!CLK&!D&RN&SE&SI	0.0100	Q(LH)	0.0010	0.6199
SETN	CLK&!D&RN&!SE&!SI	0.0100	Q(LH)	0.0010	0.8948
SETN	CLK&!D&RN&SE&!SI	0.0100	Q(LH)	0.0010	0.8948
SETN	CLK&!D&RN&!SE&SI	0.0100	Q(LH)	0.0010	0.8948
SETN	CLK&!D&RN&SE&SI	0.0100	Q(LH)	0.0010	0.8947
SETN	!CLK&D&RN&!SE&!SI	0.0100	Q(LH)	0.0010	0.6199
RN	!CLK&!D&!SE&SETN&!SI	0.0100	Q(HL)	0.0010	0.5755
RN	!CLK&D&SE&SETN&!SI	0.0100	Q(HL)	0.0010	0.5755
RN	!CLK&D&!SE&SETN&SI	0.0100	Q(HL)	0.0010	0.5759
RN	!CLK&D&SE&SETN&SI	0.0100	Q(HL)	0.0010	0.5758
RN	CLK&D&!SE&SETN&!SI	0.0100	Q(HL)	0.0010	0.8706
RN	CLK&D&SE&SETN&!SI	0.0100	Q(HL)	0.0010	0.8715
RN	CLK&D&!SE&SETN&SI	0.0100	Q(HL)	0.0010	0.8706
RN	CLK&D&SE&SETN&SI	0.0100	Q(HL)	0.0010	0.8706
RN	!CLK&!D&!SE&!SETN&!SI	0.0100	Q(HL)	0.0010	0.3939
RN	!CLK&!D&!SE&!SETN&SI	0.0100	Q(HL)	0.0010	0.3939
RN	!CLK&!D&SE&!SETN&!SI	0.0100	Q(HL)	0.0010	0.3939
RN	!CLK&!D&SE&!SETN&SI	0.0100	Q(HL)	0.0010	0.3916
RN	!CLK&D&!SE&!SETN&!SI	0.0100	Q(HL)	0.0010	0.3916
RN	!CLK&D&!SE&!SETN&SI	0.0100	Q(HL)	0.0010	0.3916
RN	!CLK&D&SE&!SETN&!SI	0.0100	Q(HL)	0.0010	0.3939
RN	!CLK&D&SE&!SETN&SI	0.0100	Q(HL)	0.0010	0.3916
RN	CLK&!D&!SE&!SETN&!SI	0.0100	Q(HL)	0.0010	0.5731
RN	CLK&!D&!SE&!SETN&SI	0.0100	Q(HL)	0.0010	0.5731
RN	CLK&!D&SE&!SETN&!SI	0.0100	Q(HL)	0.0010	0.5731
RN	CLK&!D&SE&!SETN&SI	0.0100	Q(HL)	0.0010	0.5731
RN	CLK&D&!SE&!SETN&!SI	0.0100	Q(HL)	0.0010	0.5731
RN	CLK&D&!SE&!SETN&SI	0.0100	Q(HL)	0.0010	0.5731
RN	CLK&D&SE&!SETN&!SI	0.0100	Q(HL)	0.0010	0.5731
RN	CLK&D&SE&!SETN&SI	0.0100	Q(HL)	0.0010	0.5731
RN	!CLK&!D&SE&SETN&!SI	0.0100	Q(HL)	0.0010	0.5755
RN	!CLK&!D&!SE&SETN&SI	0.0100	Q(HL)	0.0010	0.5755
RN	!CLK&!D&SE&SETN&SI	0.0100	Q(HL)	0.0010	0.5758
RN	CLK&!D&!SE&SETN&!SI	0.0100	Q(HL)	0.0010	0.8715

continues on next page

Table 286 – continued from previous page

RN	CLK&!D&SE&SETN&!SI	0.0100	Q(HL)	0.0010	0.8715
RN	CLK&!D&!SE&SETN&SI	0.0100	Q(HL)	0.0010	0.8715
RN	CLK&!D&SE&SETN&SI	0.0100	Q(HL)	0.0010	0.8707
RN	!CLK&D&!SE&SETN&!SI	0.0100	Q(HL)	0.0010	0.5758
RN	!CLK&!D&!SE&!SETN&!SI	0.0100	Q(LH)	0.0010	0.2186
RN	!CLK&!D&!SE&!SETN&SI	0.0100	Q(LH)	0.0010	0.2186
RN	!CLK&!D&SE&!SETN&!SI	0.0100	Q(LH)	0.0010	0.2186
RN	!CLK&!D&SE&!SETN&SI	0.0100	Q(LH)	0.0010	0.2206
RN	!CLK&D&!SE&!SETN&!SI	0.0100	Q(LH)	0.0010	0.2205
RN	!CLK&D&!SE&!SETN&SI	0.0100	Q(LH)	0.0010	0.2205
RN	!CLK&D&SE&!SETN&!SI	0.0100	Q(LH)	0.0010	0.2186
RN	!CLK&D&SE&!SETN&SI	0.0100	Q(LH)	0.0010	0.2206
RN	CLK&!D&!SE&!SETN&!SI	0.0100	Q(LH)	0.0010	0.3593
RN	CLK&!D&!SE&!SETN&SI	0.0100	Q(LH)	0.0010	0.3593
RN	CLK&!D&SE&!SETN&!SI	0.0100	Q(LH)	0.0010	0.3593
RN	CLK&!D&SE&!SETN&SI	0.0100	Q(LH)	0.0010	0.3594
RN	CLK&D&!SE&!SETN&!SI	0.0100	Q(LH)	0.0010	0.3593
RN	CLK&D&!SE&!SETN&SI	0.0100	Q(LH)	0.0010	0.3593
RN	CLK&D&SE&!SETN&!SI	0.0100	Q(LH)	0.0010	0.3593
RN	CLK&D&SE&!SETN&SI	0.0100	Q(LH)	0.0010	0.3594
SETN(HL)	!CLK&!D&!RN&!SE&!SI	0.0100	n/a	n/a	0.4333
SETN(HL)	!CLK&!D&!RN&!SE&SI	0.0100	n/a	n/a	0.4333
SETN(HL)	!CLK&!D&!RN&SE&!SI	0.0100	n/a	n/a	0.4333
SETN(HL)	!CLK&!D&!RN&SE&SI	0.0100	n/a	n/a	0.3078
SETN(HL)	!CLK&D&!RN&!SE&!SI	0.0100	n/a	n/a	0.3078
SETN(HL)	!CLK&D&!RN&!SE&SI	0.0100	n/a	n/a	0.3078
SETN(HL)	!CLK&D&!RN&SE&!SI	0.0100	n/a	n/a	0.4333
SETN(HL)	!CLK&D&!RN&SE&SI	0.0100	n/a	n/a	0.3078
SETN(HL)	CLK&!D&!RN&!SE&!SI	0.0100	n/a	n/a	0.4354
SETN(HL)	CLK&!D&!RN&!SE&SI	0.0100	n/a	n/a	0.4354
SETN(HL)	CLK&!D&!RN&SE&!SI	0.0100	n/a	n/a	0.4354
SETN(HL)	CLK&!D&!RN&SE&SI	0.0100	n/a	n/a	0.4354
SETN(HL)	CLK&D&!RN&!SE&!SI	0.0100	n/a	n/a	0.4354
SETN(HL)	CLK&D&!RN&!SE&SI	0.0100	n/a	n/a	0.4354
SETN(HL)	CLK&D&!RN&SE&!SI	0.0100	n/a	n/a	0.4354
SETN(HL)	CLK&D&!RN&SE&SI	0.0100	n/a	n/a	0.4354
SETN(HL)	CLK&!D&RN&!SE&!SI	0.0100	n/a	n/a	0.0708
SETN(HL)	CLK&!D&RN&SE&!SI	0.0100	n/a	n/a	0.0708
SETN(HL)	CLK&!D&RN&!SE&SI	0.0100	n/a	n/a	0.0708
SETN(HL)	CLK&!D&RN&SE&SI	0.0100	n/a	n/a	0.0709
SETN(HL)	!CLK&D&RN&!SE&!SI	0.0100	n/a	n/a	0.0708
SETN(HL)	!CLK&D&RN&SE&!SI	0.0100	n/a	n/a	0.2058
SETN(HL)	!CLK&D&RN&!SE&SI	0.0100	n/a	n/a	0.0708
SETN(HL)	!CLK&D&RN&SE&SI	0.0100	n/a	n/a	0.0708
SETN(HL)	CLK&D&RN&!SE&!SI	0.0100	n/a	n/a	0.0709
SETN(HL)	CLK&D&RN&SE&!SI	0.0100	n/a	n/a	0.0708
SETN(HL)	!CLK&!D&RN&!SE&!SI	0.0100	n/a	n/a	0.2058
SETN(HL)	CLK&D&RN&!SE&SI	0.0100	n/a	n/a	0.0709
SETN(HL)	CLK&D&RN&SE&SI	0.0100	n/a	n/a	0.0708
SETN(HL)	!CLK&!D&RN&SE&!SI	0.0100	n/a	n/a	0.2058
SETN(HL)	!CLK&!D&RN&!SE&SI	0.0100	n/a	n/a	0.2058
SETN(HL)	!CLK&!D&RN&SE&SI	0.0100	n/a	n/a	0.0708

continues on next page

Table 286 – continued from previous page

D(HL)	!CLK&!RN&!SE&!SETN&!SI	0.0100	n/a	n/a	0.2639
D(HL)	!CLK&!RN&!SE&!SETN&SI	0.0100	n/a	n/a	0.2639
D(HL)	!CLK&!RN&!SE&SETN&!SI	0.0100	n/a	n/a	0.4146
D(HL)	!CLK&!RN&!SE&SETN&SI	0.0100	n/a	n/a	0.4146
D(HL)	!CLK&!RN&SE&!SETN&!SI	0.0100	n/a	n/a	0.0330
D(HL)	!CLK&!RN&SE&!SETN&SI	0.0100	n/a	n/a	0.0152
D(HL)	!CLK&!RN&SE&SETN&!SI	0.0100	n/a	n/a	0.0330
D(HL)	!CLK&!RN&SE&SETN&SI	0.0100	n/a	n/a	0.0152
D(HL)	CLK&!RN&!SE&!SETN&!SI	0.0100	n/a	n/a	0.0368
D(HL)	CLK&!RN&!SE&!SETN&SI	0.0100	n/a	n/a	0.0367
D(HL)	CLK&!RN&!SE&SETN&!SI	0.0100	n/a	n/a	0.0368
D(HL)	CLK&!RN&!SE&SETN&SI	0.0100	n/a	n/a	0.0367
D(HL)	CLK&!RN&SE&!SETN&!SI	0.0100	n/a	n/a	0.0394
D(HL)	CLK&!RN&SE&!SETN&SI	0.0100	n/a	n/a	0.0171
D(HL)	CLK&!RN&SE&SETN&!SI	0.0100	n/a	n/a	0.0394
D(HL)	CLK&!RN&SE&SETN&SI	0.0100	n/a	n/a	0.0171
D(HL)	!CLK&RN&!SE&SETN&!SI	0.0100	n/a	n/a	0.4001
D(HL)	!CLK&RN&SE&SETN&!SI	0.0100	n/a	n/a	0.0330
D(HL)	!CLK&RN&!SE&SETN&SI	0.0100	n/a	n/a	0.4001
D(HL)	!CLK&RN&SE&SETN&SI	0.0100	n/a	n/a	0.0152
D(HL)	CLK&RN&!SE&SETN&!SI	0.0100	n/a	n/a	0.0611
D(HL)	CLK&RN&SE&SETN&!SI	0.0100	n/a	n/a	0.0321
D(HL)	!CLK&RN&!SE&!SETN&!SI	0.0100	n/a	n/a	0.2639
D(HL)	!CLK&RN&!SE&!SETN&SI	0.0100	n/a	n/a	0.2639
D(HL)	!CLK&RN&SE&!SETN&!SI	0.0100	n/a	n/a	0.0330
D(HL)	!CLK&RN&SE&!SETN&SI	0.0100	n/a	n/a	0.0152
D(HL)	CLK&RN&!SE&!SETN&!SI	0.0100	n/a	n/a	0.0321
D(HL)	CLK&RN&!SE&!SETN&SI	0.0100	n/a	n/a	0.0321
D(HL)	CLK&RN&SE&!SETN&!SI	0.0100	n/a	n/a	0.0321
D(HL)	CLK&RN&SE&!SETN&SI	0.0100	n/a	n/a	0.0171
D(HL)	CLK&RN&!SE&SETN&SI	0.0100	n/a	n/a	0.0611
D(HL)	CLK&RN&SE&SETN&SI	0.0100	n/a	n/a	0.0135
SE(HL)	!CLK&!D&!RN&!SETN&!SI	0.0100	n/a	n/a	0.1909
SE(HL)	!CLK&!D&!RN&!SETN&SI	0.0100	n/a	n/a	0.4457
SE(HL)	!CLK&!D&!RN&SETN&!SI	0.0100	n/a	n/a	0.1909
SE(HL)	!CLK&!D&!RN&SETN&SI	0.0100	n/a	n/a	0.5964
SE(HL)	!CLK&D&!RN&!SETN&!SI	0.0100	n/a	n/a	0.3228
SE(HL)	!CLK&D&!RN&!SETN&SI	0.0100	n/a	n/a	0.1934
SE(HL)	!CLK&D&!RN&SETN&!SI	0.0100	n/a	n/a	0.4974
SE(HL)	!CLK&D&!RN&SETN&SI	0.0100	n/a	n/a	0.1934
SE(HL)	CLK&!D&!RN&!SETN&!SI	0.0100	n/a	n/a	0.1988
SE(HL)	CLK&!D&!RN&!SETN&SI	0.0100	n/a	n/a	0.1950
SE(HL)	CLK&!D&!RN&SETN&!SI	0.0100	n/a	n/a	0.1988
SE(HL)	CLK&!D&!RN&SETN&SI	0.0100	n/a	n/a	0.1950
SE(HL)	CLK&D&!RN&!SETN&!SI	0.0100	n/a	n/a	0.1942
SE(HL)	CLK&D&!RN&!SETN&SI	0.0100	n/a	n/a	0.1950
SE(HL)	CLK&D&!RN&SETN&!SI	0.0100	n/a	n/a	0.1942
SE(HL)	CLK&D&!RN&SETN&SI	0.0100	n/a	n/a	0.1950
SE(HL)	CLK&!D&RN&SETN&!SI	0.0100	n/a	n/a	0.1901
SE(HL)	CLK&!D&RN&SETN&SI	0.0100	n/a	n/a	0.2436
SE(HL)	!CLK&!D&RN&!SETN&!SI	0.0100	n/a	n/a	0.1909
SE(HL)	!CLK&!D&RN&!SETN&SI	0.0100	n/a	n/a	0.4457

continues on next page

Table 286 – continued from previous page

SE(HL)	!CLK&D&RN&!SETN&!SI	0.0100	n/a	n/a	0.3228
SE(HL)	!CLK&D&RN&!SETN&SI	0.0100	n/a	n/a	0.1934
SE(HL)	CLK&!D&RN&!SETN&!SI	0.0100	n/a	n/a	0.1900
SE(HL)	CLK&!D&RN&!SETN&SI	0.0100	n/a	n/a	0.1905
SE(HL)	CLK&D&RN&!SETN&!SI	0.0100	n/a	n/a	0.1940
SE(HL)	CLK&D&RN&!SETN&SI	0.0100	n/a	n/a	0.2012
SE(HL)	!CLK&D&RN&SETN&!SI	0.0100	n/a	n/a	0.5069
SE(HL)	!CLK&D&RN&SETN&SI	0.0100	n/a	n/a	0.1935
SE(HL)	CLK&D&RN&SETN&!SI	0.0100	n/a	n/a	0.1961
SE(HL)	CLK&D&RN&SETN&SI	0.0100	n/a	n/a	0.1929
SE(HL)	!CLK&!D&RN&SETN&!SI	0.0100	n/a	n/a	0.1909
SE(HL)	!CLK&!D&RN&SETN&SI	0.0100	n/a	n/a	0.5818
SE(LH)	!CLK&!D&!RN&!SETN&!SI	0.0100	n/a	n/a	0.0032
SE(LH)	!CLK&!D&!RN&!SETN&SI	0.0100	n/a	n/a	0.1268
SE(LH)	!CLK&!D&!RN&SETN&!SI	0.0100	n/a	n/a	0.0032
SE(LH)	!CLK&!D&!RN&SETN&SI	0.0100	n/a	n/a	0.3081
SE(LH)	!CLK&D&!RN&!SETN&!SI	0.0100	n/a	n/a	0.2764
SE(LH)	!CLK&D&!RN&!SETN&SI	0.0100	n/a	n/a	-0.0120
SE(LH)	!CLK&D&!RN&SETN&!SI	0.0100	n/a	n/a	0.4431
SE(LH)	!CLK&D&!RN&SETN&SI	0.0100	n/a	n/a	-0.0120
SE(LH)	CLK&!D&!RN&!SETN&!SI	0.0100	n/a	n/a	-0.0000
SE(LH)	CLK&!D&!RN&!SETN&SI	0.0100	n/a	n/a	-0.0086
SE(LH)	CLK&!D&!RN&SETN&!SI	0.0100	n/a	n/a	-0.0000
SE(LH)	CLK&!D&!RN&SETN&SI	0.0100	n/a	n/a	-0.0085
SE(LH)	CLK&D&!RN&!SETN&!SI	0.0100	n/a	n/a	0.0007
SE(LH)	CLK&D&!RN&!SETN&SI	0.0100	n/a	n/a	-0.0122
SE(LH)	CLK&D&!RN&SETN&!SI	0.0100	n/a	n/a	0.0007
SE(LH)	CLK&D&!RN&SETN&SI	0.0100	n/a	n/a	-0.0122
SE(LH)	CLK&!D&RN&SETN&!SI	0.0100	n/a	n/a	-0.0000
SE(LH)	CLK&!D&RN&SETN&SI	0.0100	n/a	n/a	-0.0085
SE(LH)	!CLK&!D&RN&!SETN&!SI	0.0100	n/a	n/a	0.0032
SE(LH)	!CLK&!D&RN&!SETN&SI	0.0100	n/a	n/a	0.1268
SE(LH)	!CLK&D&RN&!SETN&!SI	0.0100	n/a	n/a	0.2764
SE(LH)	!CLK&D&RN&!SETN&SI	0.0100	n/a	n/a	-0.0120
SE(LH)	CLK&!D&RN&!SETN&!SI	0.0100	n/a	n/a	-0.0000
SE(LH)	CLK&!D&RN&!SETN&SI	0.0100	n/a	n/a	-0.0085
SE(LH)	CLK&D&RN&!SETN&!SI	0.0100	n/a	n/a	0.0008
SE(LH)	CLK&D&RN&!SETN&SI	0.0100	n/a	n/a	-0.0122
SE(LH)	!CLK&D&RN&SETN&!SI	0.0100	n/a	n/a	0.4277
SE(LH)	!CLK&D&RN&SETN&SI	0.0100	n/a	n/a	-0.0120
SE(LH)	CLK&D&RN&SETN&!SI	0.0100	n/a	n/a	0.0324
SE(LH)	CLK&D&RN&SETN&SI	0.0100	n/a	n/a	-0.0156
SE(LH)	!CLK&!D&RN&SETN&!SI	0.0100	n/a	n/a	0.0032
SE(LH)	!CLK&!D&RN&SETN&SI	0.0100	n/a	n/a	0.3174
CLK(LH)	!D&!RN&!SE&!SETN&!SI	0.0100	n/a	n/a	0.3224
CLK(LH)	!D&!RN&!SE&!SETN&SI	0.0100	n/a	n/a	0.3224
CLK(LH)	!D&!RN&!SE&SETN&!SI	0.0100	n/a	n/a	0.3034
CLK(LH)	!D&!RN&!SE&SETN&SI	0.0100	n/a	n/a	0.3034
CLK(LH)	!D&!RN&SE&!SETN&!SI	0.0100	n/a	n/a	0.3224
CLK(LH)	!D&!RN&SE&!SETN&SI	0.0100	n/a	n/a	0.4435
CLK(LH)	!D&!RN&SE&SETN&!SI	0.0100	n/a	n/a	0.3033
CLK(LH)	!D&!RN&SE&SETN&SI	0.0100	n/a	n/a	0.6511

continues on next page

Table 286 – continued from previous page

CLK(LH)	D&!RN&!SE&!SETN&!SI	0.0100	n/a	n/a	0.4433
CLK(LH)	D&!RN&!SE&!SETN&SI	0.0100	n/a	n/a	0.4434
CLK(LH)	D&!RN&!SE&SETN&!SI	0.0100	n/a	n/a	0.6508
CLK(LH)	D&!RN&!SE&SETN&SI	0.0100	n/a	n/a	0.6508
CLK(LH)	D&!RN&SE&!SETN&!SI	0.0100	n/a	n/a	0.3224
CLK(LH)	D&!RN&SE&!SETN&SI	0.0100	n/a	n/a	0.4435
CLK(LH)	D&!RN&SE&SETN&!SI	0.0100	n/a	n/a	0.3034
CLK(LH)	D&!RN&SE&SETN&SI	0.0100	n/a	n/a	0.6510
CLK(LH)	!D&RN&!SE&SETN&!SI	0.0100	n/a	n/a	0.3032
CLK(LH)	!D&RN&SE&SETN&!SI	0.0100	n/a	n/a	0.3032
CLK(LH)	!D&RN&!SE&SETN&SI	0.0100	n/a	n/a	0.3032
CLK(LH)	!D&RN&SE&SETN&SI	0.0100	n/a	n/a	0.3253
CLK(LH)	D&RN&!SE&SETN&!SI	0.0100	n/a	n/a	0.3252
CLK(LH)	D&RN&SE&SETN&!SI	0.0100	n/a	n/a	0.3032
CLK(LH)	!D&RN&!SE&!SETN&!SI	0.0100	n/a	n/a	0.4123
CLK(LH)	!D&RN&!SE&!SETN&SI	0.0100	n/a	n/a	0.4123
CLK(LH)	!D&RN&SE&!SETN&!SI	0.0100	n/a	n/a	0.4126
CLK(LH)	!D&RN&SE&!SETN&SI	0.0100	n/a	n/a	0.3257
CLK(LH)	D&RN&!SE&!SETN&!SI	0.0100	n/a	n/a	0.3254
CLK(LH)	D&RN&!SE&!SETN&SI	0.0100	n/a	n/a	0.3254
CLK(LH)	D&RN&SE&!SETN&!SI	0.0100	n/a	n/a	0.4123
CLK(LH)	D&RN&SE&!SETN&SI	0.0100	n/a	n/a	0.3255
CLK(LH)	D&RN&!SE&SETN&SI	0.0100	n/a	n/a	0.3253
CLK(LH)	D&RN&SE&SETN&SI	0.0100	n/a	n/a	0.3253
SI(LH)	!CLK&!D&!RN&!SE&!SETN	0.0100	n/a	n/a	-0.0315
SI(LH)	!CLK&!D&!RN&!SE&SETN	0.0100	n/a	n/a	-0.0315
SI(LH)	!CLK&!D&!RN&SE&!SETN	0.0100	n/a	n/a	0.1256
SI(LH)	!CLK&!D&!RN&SE&SETN	0.0100	n/a	n/a	0.3089
SI(LH)	!CLK&D&!RN&!SE&!SETN	0.0100	n/a	n/a	-0.0293
SI(LH)	!CLK&D&!RN&!SE&SETN	0.0100	n/a	n/a	-0.0293
SI(LH)	!CLK&D&!RN&SE&!SETN	0.0100	n/a	n/a	0.1097
SI(LH)	!CLK&D&!RN&SE&SETN	0.0100	n/a	n/a	0.2896
SI(LH)	CLK&!D&!RN&!SE&!SETN	0.0100	n/a	n/a	-0.0315
SI(LH)	CLK&!D&!RN&!SE&SETN	0.0100	n/a	n/a	-0.0315
SI(LH)	CLK&!D&!RN&SE&!SETN	0.0100	n/a	n/a	-0.0260
SI(LH)	CLK&!D&!RN&SE&SETN	0.0100	n/a	n/a	-0.0260
SI(LH)	CLK&D&!RN&!SE&!SETN	0.0100	n/a	n/a	-0.0304
SI(LH)	CLK&D&!RN&!SE&SETN	0.0100	n/a	n/a	-0.0304
SI(LH)	CLK&D&!RN&SE&!SETN	0.0100	n/a	n/a	-0.0263
SI(LH)	CLK&D&!RN&SE&SETN	0.0100	n/a	n/a	-0.0263
SI(LH)	CLK&!D&RN&!SE&SETN	0.0100	n/a	n/a	-0.0315
SI(LH)	CLK&!D&RN&SE&SETN	0.0100	n/a	n/a	-0.0260
SI(LH)	!CLK&D&RN&!SE&SETN	0.0100	n/a	n/a	-0.0293
SI(LH)	!CLK&D&RN&SE&SETN	0.0100	n/a	n/a	0.2989
SI(LH)	!CLK&!D&RN&!SE&!SETN	0.0100	n/a	n/a	-0.0315
SI(LH)	!CLK&!D&RN&SE&!SETN	0.0100	n/a	n/a	0.1256
SI(LH)	!CLK&D&RN&!SE&!SETN	0.0100	n/a	n/a	-0.0293
SI(LH)	!CLK&D&RN&SE&!SETN	0.0100	n/a	n/a	0.1097
SI(LH)	CLK&!D&RN&!SE&!SETN	0.0100	n/a	n/a	-0.0315
SI(LH)	CLK&!D&RN&SE&!SETN	0.0100	n/a	n/a	-0.0260
SI(LH)	CLK&D&RN&!SE&!SETN	0.0100	n/a	n/a	-0.0304
SI(LH)	CLK&D&RN&SE&!SETN	0.0100	n/a	n/a	-0.0263

continues on next page

Table 286 – continued from previous page

SI(LH)	CLK&D&RN&!SE&SETN	0.0100	n/a	n/a	-0.0298
SI(LH)	CLK&D&RN&SE&SETN	0.0100	n/a	n/a	-0.0263
SI(LH)	!CLK&!D&RN&!SE&SETN	0.0100	n/a	n/a	-0.0315
SI(LH)	!CLK&!D&RN&SE&SETN	0.0100	n/a	n/a	0.3183
CLK(HL)	!D&!RN&!SE&!SETN&!SI	0.0100	n/a	n/a	0.4712
CLK(HL)	!D&!RN&!SE&!SETN&SI	0.0100	n/a	n/a	0.4712
CLK(HL)	!D&!RN&!SE&SETN&!SI	0.0100	n/a	n/a	0.4644
CLK(HL)	!D&!RN&!SE&SETN&SI	0.0100	n/a	n/a	0.4644
CLK(HL)	!D&!RN&SE&!SETN&!SI	0.0100	n/a	n/a	0.4998
CLK(HL)	!D&!RN&SE&!SETN&SI	0.0100	n/a	n/a	0.5501
CLK(HL)	!D&!RN&SE&SETN&!SI	0.0100	n/a	n/a	0.4934
CLK(HL)	!D&!RN&SE&SETN&SI	0.0100	n/a	n/a	0.7304
CLK(HL)	D&!RN&!SE&!SETN&!SI	0.0100	n/a	n/a	0.5210
CLK(HL)	D&!RN&!SE&!SETN&SI	0.0100	n/a	n/a	0.5210
CLK(HL)	D&!RN&!SE&SETN&!SI	0.0100	n/a	n/a	0.6894
CLK(HL)	D&!RN&!SE&SETN&SI	0.0100	n/a	n/a	0.6894
CLK(HL)	D&!RN&SE&!SETN&!SI	0.0100	n/a	n/a	0.5281
CLK(HL)	D&!RN&SE&!SETN&SI	0.0100	n/a	n/a	0.5346
CLK(HL)	D&!RN&SE&SETN&!SI	0.0100	n/a	n/a	0.5258
CLK(HL)	D&!RN&SE&SETN&SI	0.0100	n/a	n/a	0.7097
CLK(HL)	!D&RN&!SE&SETN&!SI	0.0100	n/a	n/a	0.4084
CLK(HL)	!D&RN&SE&SETN&!SI	0.0100	n/a	n/a	0.4084
CLK(HL)	!D&RN&!SE&SETN&SI	0.0100	n/a	n/a	0.4084
CLK(HL)	!D&RN&SE&SETN&SI	0.0100	n/a	n/a	0.4077
CLK(HL)	D&RN&!SE&SETN&!SI	0.0100	n/a	n/a	0.4079
CLK(HL)	D&RN&SE&SETN&!SI	0.0100	n/a	n/a	0.4083
CLK(HL)	!D&RN&!SE&!SETN&!SI	0.0100	n/a	n/a	0.6019
CLK(HL)	!D&RN&!SE&!SETN&SI	0.0100	n/a	n/a	0.6019
CLK(HL)	!D&RN&SE&!SETN&!SI	0.0100	n/a	n/a	0.6297
CLK(HL)	!D&RN&SE&!SETN&SI	0.0100	n/a	n/a	0.4701
CLK(HL)	D&RN&!SE&!SETN&!SI	0.0100	n/a	n/a	0.4410
CLK(HL)	D&RN&!SE&!SETN&SI	0.0100	n/a	n/a	0.4410
CLK(HL)	D&RN&SE&!SETN&!SI	0.0100	n/a	n/a	0.6570
CLK(HL)	D&RN&SE&!SETN&SI	0.0100	n/a	n/a	0.4542
CLK(HL)	D&RN&!SE&SETN&SI	0.0100	n/a	n/a	0.4079
CLK(HL)	D&RN&SE&SETN&SI	0.0100	n/a	n/a	0.4078
SI(HL)	!CLK&!D&!RN&!SE&!SETN	0.0100	n/a	n/a	0.0325
SI(HL)	!CLK&!D&!RN&!SE&SETN	0.0100	n/a	n/a	0.0325
SI(HL)	!CLK&!D&!RN&SE&!SETN	0.0100	n/a	n/a	0.3369
SI(HL)	!CLK&!D&!RN&SE&SETN	0.0100	n/a	n/a	0.4984
SI(HL)	!CLK&D&!RN&!SE&!SETN	0.0100	n/a	n/a	0.0321
SI(HL)	!CLK&D&!RN&!SE&SETN	0.0100	n/a	n/a	0.0321
SI(HL)	!CLK&D&!RN&SE&!SETN	0.0100	n/a	n/a	0.3419
SI(HL)	!CLK&D&!RN&SE&SETN	0.0100	n/a	n/a	0.5087
SI(HL)	CLK&!D&!RN&!SE&!SETN	0.0100	n/a	n/a	0.0321
SI(HL)	CLK&!D&!RN&!SE&SETN	0.0100	n/a	n/a	0.0321
SI(HL)	CLK&!D&!RN&SE&!SETN	0.0100	n/a	n/a	0.0323
SI(HL)	CLK&!D&!RN&SE&SETN	0.0100	n/a	n/a	0.0322
SI(HL)	CLK&D&!RN&!SE&!SETN	0.0100	n/a	n/a	0.0321
SI(HL)	CLK&D&!RN&!SE&SETN	0.0100	n/a	n/a	0.0321
SI(HL)	CLK&D&!RN&SE&!SETN	0.0100	n/a	n/a	0.0321
SI(HL)	CLK&D&!RN&SE&SETN	0.0100	n/a	n/a	0.0321

continues on next page

Table 286 – continued from previous page

SI(HL)	CLK&!D&RN&!SE&SETN	0.0100	n/a	n/a	0.0321
SI(HL)	CLK&!D&RN&SE&SETN	0.0100	n/a	n/a	0.1103
SI(HL)	!CLK&D&RN&!SE&SETN	0.0100	n/a	n/a	0.0321
SI(HL)	!CLK&D&RN&SE&SETN	0.0100	n/a	n/a	0.4933
SI(HL)	!CLK&!D&RN&!SE&!SETN	0.0100	n/a	n/a	0.0325
SI(HL)	!CLK&!D&RN&SE&!SETN	0.0100	n/a	n/a	0.3369
SI(HL)	!CLK&D&RN&!SE&!SETN	0.0100	n/a	n/a	0.0321
SI(HL)	!CLK&D&RN&SE&!SETN	0.0100	n/a	n/a	0.3419
SI(HL)	CLK&!D&RN&!SE&!SETN	0.0100	n/a	n/a	0.0321
SI(HL)	CLK&!D&RN&SE&!SETN	0.0100	n/a	n/a	0.0320
SI(HL)	CLK&D&RN&!SE&!SETN	0.0100	n/a	n/a	0.0321
SI(HL)	CLK&D&RN&SE&!SETN	0.0100	n/a	n/a	0.0320
SI(HL)	CLK&D&RN&!SE&SETN	0.0100	n/a	n/a	0.0321
SI(HL)	CLK&D&RN&SE&SETN	0.0100	n/a	n/a	0.0870
SI(HL)	!CLK&!D&RN&!SE&SETN	0.0100	n/a	n/a	0.0325
SI(HL)	!CLK&!D&RN&SE&SETN	0.0100	n/a	n/a	0.4832
D(LH)	!CLK&!RN&!SE&!SETN&!SI	0.0100	n/a	n/a	0.0997
D(LH)	!CLK&!RN&!SE&!SETN&SI	0.0100	n/a	n/a	0.0997
D(LH)	!CLK&!RN&!SE&SETN&!SI	0.0100	n/a	n/a	0.2742
D(LH)	!CLK&!RN&!SE&SETN&SI	0.0100	n/a	n/a	0.2742
D(LH)	!CLK&!RN&SE&!SETN&!SI	0.0100	n/a	n/a	-0.0287
D(LH)	!CLK&!RN&SE&!SETN&SI	0.0100	n/a	n/a	-0.0103
D(LH)	!CLK&!RN&SE&SETN&!SI	0.0100	n/a	n/a	-0.0287
D(LH)	!CLK&!RN&SE&SETN&SI	0.0100	n/a	n/a	-0.0103
D(LH)	CLK&!RN&!SE&!SETN&!SI	0.0100	n/a	n/a	-0.0281
D(LH)	CLK&!RN&!SE&!SETN&SI	0.0100	n/a	n/a	-0.0279
D(LH)	CLK&!RN&!SE&SETN&!SI	0.0100	n/a	n/a	-0.0281
D(LH)	CLK&!RN&!SE&SETN&SI	0.0100	n/a	n/a	-0.0279
D(LH)	CLK&!RN&SE&!SETN&!SI	0.0100	n/a	n/a	-0.0313
D(LH)	CLK&!RN&SE&!SETN&SI	0.0100	n/a	n/a	-0.0227
D(LH)	CLK&!RN&SE&SETN&!SI	0.0100	n/a	n/a	-0.0313
D(LH)	CLK&!RN&SE&SETN&SI	0.0100	n/a	n/a	-0.0227
D(LH)	!CLK&RN&!SE&SETN&!SI	0.0100	n/a	n/a	0.2839
D(LH)	!CLK&RN&SE&SETN&!SI	0.0100	n/a	n/a	-0.0287
D(LH)	!CLK&RN&!SE&SETN&SI	0.0100	n/a	n/a	0.2839
D(LH)	!CLK&RN&SE&SETN&SI	0.0100	n/a	n/a	-0.0103
D(LH)	CLK&RN&!SE&SETN&!SI	0.0100	n/a	n/a	-0.0281
D(LH)	CLK&RN&SE&SETN&!SI	0.0100	n/a	n/a	-0.0313
D(LH)	!CLK&RN&!SE&!SETN&!SI	0.0100	n/a	n/a	0.0997
D(LH)	!CLK&RN&!SE&!SETN&SI	0.0100	n/a	n/a	0.0997
D(LH)	!CLK&RN&SE&!SETN&!SI	0.0100	n/a	n/a	-0.0287
D(LH)	!CLK&RN&SE&!SETN&SI	0.0100	n/a	n/a	-0.0103
D(LH)	CLK&RN&!SE&!SETN&!SI	0.0100	n/a	n/a	-0.0255
D(LH)	CLK&RN&!SE&!SETN&SI	0.0100	n/a	n/a	-0.0253
D(LH)	CLK&RN&SE&!SETN&!SI	0.0100	n/a	n/a	-0.0313
D(LH)	CLK&RN&SE&!SETN&SI	0.0100	n/a	n/a	-0.0219
D(LH)	CLK&RN&!SE&SETN&SI	0.0100	n/a	n/a	-0.0278
D(LH)	CLK&RN&SE&SETN&SI	0.0100	n/a	n/a	-0.0109
RN(HL)	!CLK&!D&!SE&SETN&!SI	0.0100	n/a	n/a	0.0804
RN(HL)	!CLK&D&SE&SETN&!SI	0.0100	n/a	n/a	0.0804
RN(HL)	!CLK&D&!SE&SETN&SI	0.0100	n/a	n/a	0.0797
RN(HL)	!CLK&D&SE&SETN&SI	0.0100	n/a	n/a	0.0797

continues on next page

Table 286 – continued from previous page

RN(HL)	CLK&D&!SE&SETN&!SI	0.0100	n/a	n/a	0.0825
RN(HL)	CLK&D&SE&SETN&!SI	0.0100	n/a	n/a	0.0827
RN(HL)	CLK&D&!SE&SETN&SI	0.0100	n/a	n/a	0.0825
RN(HL)	CLK&D&SE&SETN&SI	0.0100	n/a	n/a	0.0825
RN(HL)	!CLK&!D&SE&SETN&!SI	0.0100	n/a	n/a	0.0804
RN(HL)	!CLK&!D&!SE&SETN&SI	0.0100	n/a	n/a	0.0804
RN(HL)	!CLK&!D&SE&SETN&SI	0.0100	n/a	n/a	0.0797
RN(HL)	CLK&!D&!SE&SETN&!SI	0.0100	n/a	n/a	0.0827
RN(HL)	CLK&!D&SE&SETN&!SI	0.0100	n/a	n/a	0.0827
RN(HL)	CLK&!D&!SE&SETN&SI	0.0100	n/a	n/a	0.0827
RN(HL)	CLK&!D&SE&SETN&SI	0.0100	n/a	n/a	0.0825
RN(HL)	!CLK&D&!SE&SETN&!SI	0.0100	n/a	n/a	0.0797
RN(LH)	!CLK&!D&!SE&SETN&!SI	0.0100	n/a	n/a	-0.0766
RN(LH)	!CLK&!D&!SE&SETN&SI	0.0100	n/a	n/a	-0.0766
RN(LH)	!CLK&!D&SE&SETN&!SI	0.0100	n/a	n/a	-0.0766
RN(LH)	!CLK&!D&SE&SETN&SI	0.0100	n/a	n/a	-0.0716
RN(LH)	!CLK&D&!SE&SETN&!SI	0.0100	n/a	n/a	-0.0716
RN(LH)	!CLK&D&!SE&SETN&SI	0.0100	n/a	n/a	-0.0716
RN(LH)	!CLK&D&SE&SETN&!SI	0.0100	n/a	n/a	-0.0766
RN(LH)	!CLK&D&SE&SETN&SI	0.0100	n/a	n/a	-0.0716
RN(LH)	CLK&!D&!SE&SETN&!SI	0.0100	n/a	n/a	-0.0766
RN(LH)	CLK&!D&!SE&SETN&SI	0.0100	n/a	n/a	-0.0766
RN(LH)	CLK&!D&SE&SETN&!SI	0.0100	n/a	n/a	-0.0766
RN(LH)	CLK&!D&SE&SETN&SI	0.0100	n/a	n/a	-0.0766
RN(LH)	CLK&D&!SE&SETN&!SI	0.0100	n/a	n/a	-0.0766
RN(LH)	CLK&D&!SE&SETN&SI	0.0100	n/a	n/a	-0.0766
RN(LH)	CLK&D&SE&SETN&!SI	0.0100	n/a	n/a	-0.0766
RN(LH)	CLK&D&SE&SETN&SI	0.0100	n/a	n/a	-0.0766
SETN(LH)	!CLK&!D&!RN&!SE&!SI	0.0100	n/a	n/a	0.1970
SETN(LH)	!CLK&!D&!RN&!SE&SI	0.0100	n/a	n/a	0.1970
SETN(LH)	!CLK&!D&!RN&SE&!SI	0.0100	n/a	n/a	0.1970
SETN(LH)	!CLK&!D&!RN&SE&SI	0.0100	n/a	n/a	0.0980
SETN(LH)	!CLK&D&!RN&!SE&!SI	0.0100	n/a	n/a	0.0980
SETN(LH)	!CLK&D&!RN&!SE&SI	0.0100	n/a	n/a	0.0980
SETN(LH)	!CLK&D&!RN&SE&!SI	0.0100	n/a	n/a	0.1970
SETN(LH)	!CLK&D&!RN&SE&SI	0.0100	n/a	n/a	0.0980
SETN(LH)	CLK&!D&!RN&!SE&!SI	0.0100	n/a	n/a	0.1874
SETN(LH)	CLK&!D&!RN&!SE&SI	0.0100	n/a	n/a	0.1874
SETN(LH)	CLK&!D&!RN&SE&!SI	0.0100	n/a	n/a	0.1874
SETN(LH)	CLK&!D&!RN&SE&SI	0.0100	n/a	n/a	0.1874
SETN(LH)	CLK&D&!RN&!SE&!SI	0.0100	n/a	n/a	0.1874
SETN(LH)	CLK&D&!RN&!SE&SI	0.0100	n/a	n/a	0.1874
SETN(LH)	CLK&D&!RN&SE&!SI	0.0100	n/a	n/a	0.1874
SETN(LH)	CLK&D&!RN&SE&SI	0.0100	n/a	n/a	0.1874
SETN(LH)	!CLK&!D&RN&!SE&!SI	0.0100	n/a	n/a	0.0360
SETN(LH)	!CLK&!D&RN&!SE&SI	0.0100	n/a	n/a	0.0360
SETN(LH)	!CLK&!D&RN&SE&!SI	0.0100	n/a	n/a	0.0360
SETN(LH)	!CLK&!D&RN&SE&SI	0.0100	n/a	n/a	-0.0506
SETN(LH)	!CLK&D&RN&!SE&!SI	0.0100	n/a	n/a	-0.0506
SETN(LH)	!CLK&D&RN&!SE&SI	0.0100	n/a	n/a	-0.0506
SETN(LH)	!CLK&D&RN&SE&!SI	0.0100	n/a	n/a	0.0360
SETN(LH)	!CLK&D&RN&SE&SI	0.0100	n/a	n/a	-0.0506

continues on next page

Table 286 – continued from previous page

SETN(LH)	CLK&!D&RN&!SE&!SI	0.0100	n/a	n/a	-0.0506
SETN(LH)	CLK&!D&RN&!SE&SI	0.0100	n/a	n/a	-0.0506
SETN(LH)	CLK&!D&RN&SE&!SI	0.0100	n/a	n/a	-0.0506
SETN(LH)	CLK&!D&RN&SE&SI	0.0100	n/a	n/a	-0.0506
SETN(LH)	CLK&D&RN&!SE&!SI	0.0100	n/a	n/a	-0.0506
SETN(LH)	CLK&D&RN&!SE&SI	0.0100	n/a	n/a	-0.0506
SETN(LH)	CLK&D&RN&SE&!SI	0.0100	n/a	n/a	-0.0506
SETN(LH)	CLK&D&RN&SE&SI	0.0100	n/a	n/a	-0.0506

LEAKAGE POWER

When Condition	Power (nW)
!CLK&!D&!RN&!SE&!SETN&!SI	0.4820
!CLK&!D&!RN&!SE&!SETN&SI	0.4822
!CLK&!D&!RN&!SE&SETN&!SI	0.4990
!CLK&!D&!RN&!SE&SETN&SI	0.4991
!CLK&!D&!RN&SE&!SETN&!SI	0.5221
!CLK&!D&!RN&SE&!SETN&SI	0.5494
!CLK&!D&!RN&SE&SETN&!SI	0.5392
!CLK&!D&!RN&SE&SETN&SI	0.5786
!CLK&D&!RN&!SE&!SETN&!SI	0.4778
!CLK&D&!RN&!SE&!SETN&SI	0.4778
!CLK&D&!RN&!SE&SETN&!SI	0.5070
!CLK&D&!RN&!SE&SETN&SI	0.5070
!CLK&D&!RN&SE&!SETN&!SI	0.5616
!CLK&D&!RN&SE&!SETN&SI	0.5140
!CLK&D&!RN&SE&SETN&!SI	0.5786
!CLK&D&!RN&SE&SETN&SI	0.5432
CLK&!D&!RN&!SE&!SETN&!SI	0.5008
CLK&!D&!RN&!SE&!SETN&SI	0.5008
CLK&!D&!RN&!SE&SETN&!SI	0.4784
CLK&!D&!RN&!SE&SETN&SI	0.4784
CLK&!D&!RN&SE&!SETN&!SI	0.5018
CLK&!D&!RN&SE&!SETN&SI	0.5020
CLK&!D&!RN&SE&SETN&!SI	0.4793
CLK&!D&!RN&SE&SETN&SI	0.4795
CLK&D&!RN&!SE&!SETN&!SI	0.5010
CLK&D&!RN&!SE&!SETN&SI	0.5010
CLK&D&!RN&!SE&SETN&!SI	0.4786
CLK&D&!RN&!SE&SETN&SI	0.4786
CLK&D&!RN&SE&!SETN&!SI	0.5018
CLK&D&!RN&SE&!SETN&SI	0.5020
CLK&D&!RN&SE&SETN&!SI	0.4794
CLK&D&!RN&SE&SETN&SI	0.4795
!CLK&!D&RN&!SE&SETN&!SI	0.6984
!CLK&!D&RN&!SE&SETN&SI	0.6986
!CLK&!D&RN&SE&SETN&!SI	0.7386

continues on next page

Table 287 – continued from previous page

!CLK&!D&RN&SE&SETN&SI	0.7306
!CLK&D&RN&!SE&SETN&!SI	0.6590
!CLK&D&RN&!SE&SETN&SI	0.6590
!CLK&D&RN&SE&SETN&!SI	0.7781
!CLK&D&RN&SE&SETN&SI	0.6953
CLK&!D&RN&!SE&SETN&!SI	0.5190
CLK&!D&RN&!SE&SETN&SI	0.5190
CLK&!D&RN&SE&SETN&!SI	0.5198
CLK&D&RN&SE&SETN&!SI	0.5198
!CLK&!D&RN&!SE&!SETN&!SI	0.4684
!CLK&!D&RN&!SE&!SETN&SI	0.4686
!CLK&!D&RN&SE&!SETN&!SI	0.5086
!CLK&!D&RN&SE&!SETN&SI	0.5356
!CLK&D&RN&!SE&!SETN&!SI	0.4640
!CLK&D&RN&!SE&!SETN&SI	0.4640
!CLK&D&RN&SE&!SETN&!SI	0.5481
!CLK&D&RN&SE&!SETN&SI	0.5003
CLK&!D&RN&!SE&!SETN&!SI	0.4640
CLK&!D&RN&!SE&!SETN&SI	0.4640
CLK&!D&RN&SE&!SETN&!SI	0.4649
CLK&!D&RN&SE&!SETN&SI	0.4649
CLK&D&RN&!SE&!SETN&!SI	0.4640
CLK&D&RN&!SE&!SETN&SI	0.4640
CLK&D&RN&SE&!SETN&!SI	0.4649
CLK&D&RN&SE&!SETN&SI	0.4649
CLK&!D&RN&SE&SETN&SI	0.8125
CLK&D&RN&!SE&SETN&!SI	0.7773
CLK&D&RN&!SE&SETN&SI	0.7773
CLK&D&RN&SE&SETN&SI	0.7965

gf180mcu_fd_sc_mcu9t5v0__sdffrsnq_2

gf180mcu_fd_sc_mcu9t5v0__sdffrsnq_2 symbol

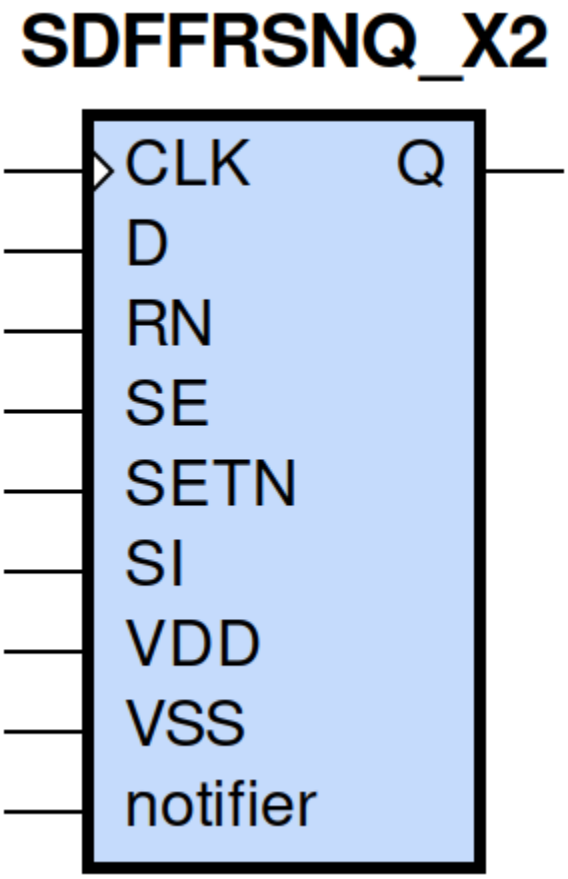

gf180mcu_fd_sc_mcu9t5v0__sdffrsnq_2 schematic

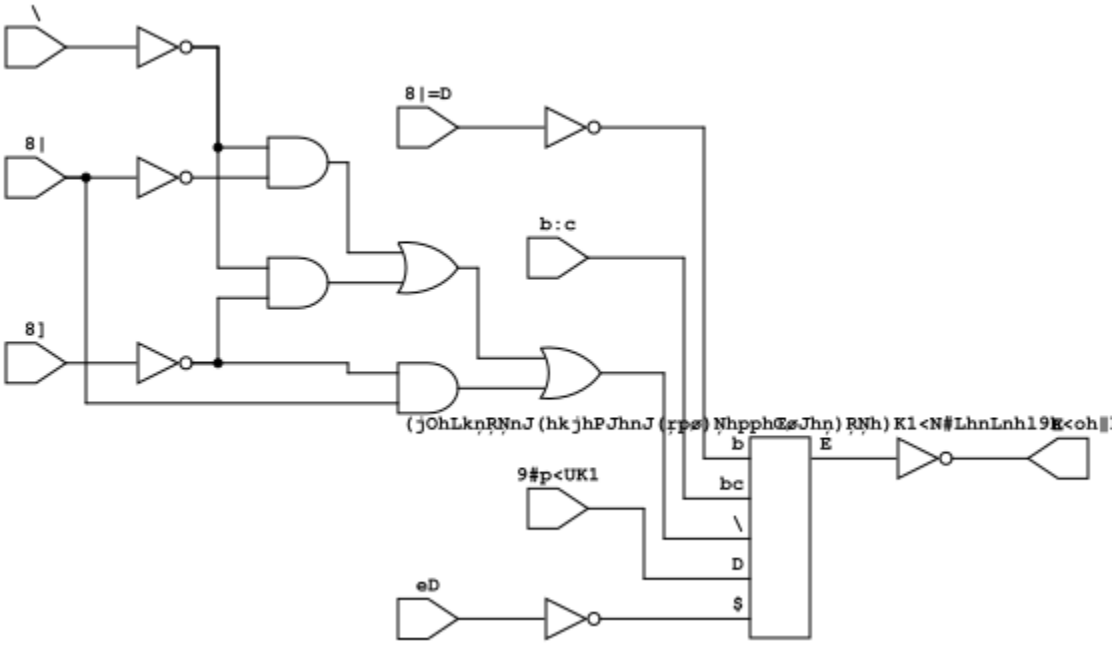

gf180mcu_fd_sc_mcu9t5v0__sdffrsnq_2 layout

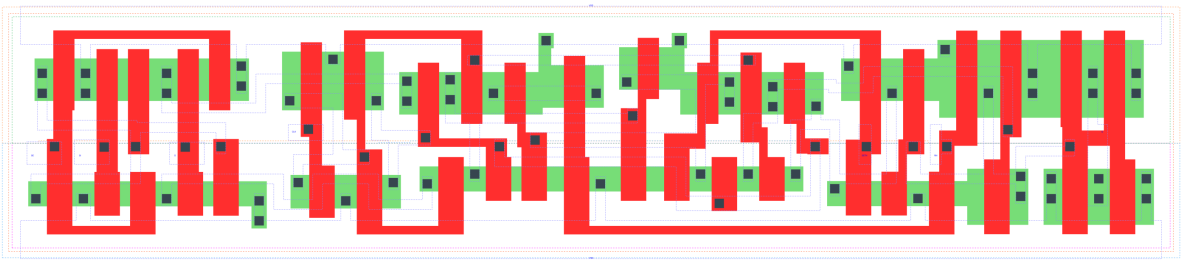

SDFFRSNQ_X2 is a positive edge triggered scan D-type flip flop with active low reset and 2X drive strength

Attributes

Attribute	Value
area	135.475200 μm^2

TRUTH TABLE

Input						Output
RN	SETN	SE	SI	D	CLK	Q
H	H	L	X	L	↑	L
H	H	L	X	H	↑	H
H	H	H	L	X	↑	L
H	H	H	H	X	↑	H
H	L	X	X	X	X	H
L	H	X	X	X	X	L
L	L	X	X	X	X	L

FUNCTIONAL SCHEMATIC

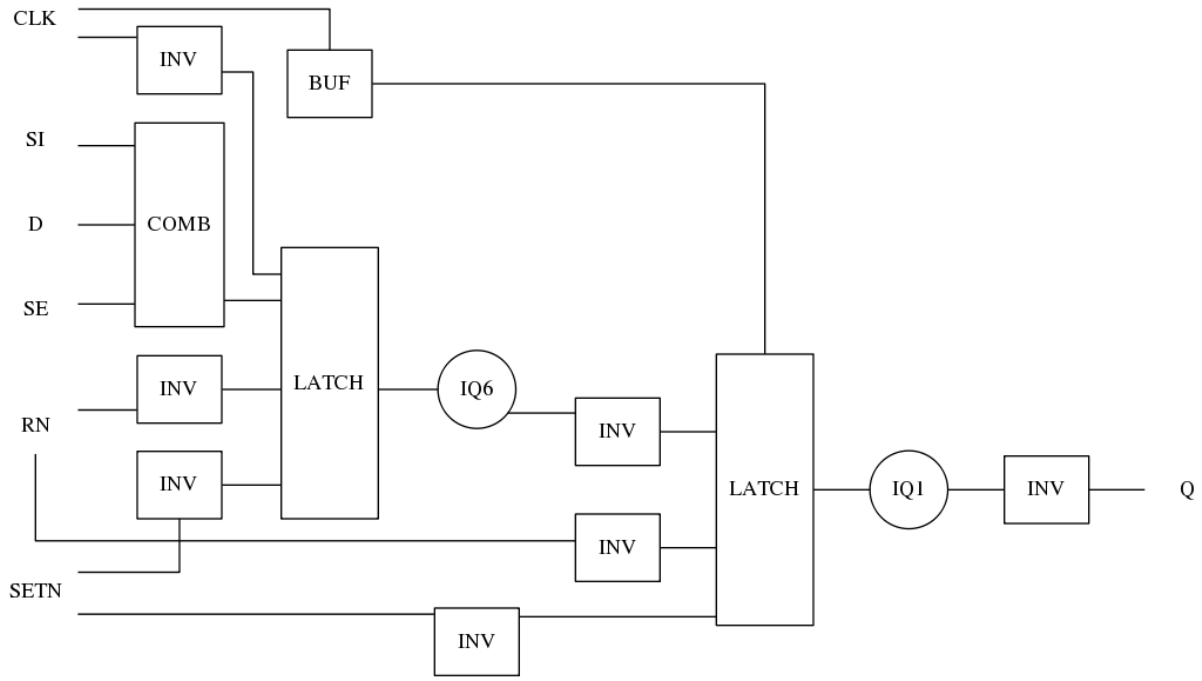

CONSTRAINTS

Constraint Pin	Related Pin	setup(ns)	hold(ns)
SE(LH)	CLK(LH)	0.4980	-0.1890
SE(LH)	CLK(LH)	0.6980	-0.0970
SE(HL)	CLK(LH)	0.5780	-0.0630
SE(HL)	CLK(LH)	0.5730	-0.2920
SI(HL)	CLK(LH)	0.6640	-0.0970
SI(HL)	CLK(LH)	0.6700	-0.0630
SI(LH)	CLK(LH)	0.5440	-0.2350
SI(LH)	CLK(LH)	0.5320	-0.2350
D(HL)	CLK(LH)	0.5670	-0.0460
D(HL)	CLK(LH)	0.5670	-0.0460
D(LH)	CLK(LH)	0.4690	-0.1830
D(LH)	CLK(LH)	0.4690	-0.1830
SETN(LH)	RN(LH)	-0.0290	0.1090
SETN(LH)	RN(LH)	-0.0290	0.1090
SETN(LH)	RN(LH)	-0.0290	0.1090
SETN(LH)	RN(LH)	-0.0290	0.1090
SETN(LH)	RN(LH)	-0.0400	0.1030
SETN(LH)	RN(LH)	-0.0400	0.1030
SETN(LH)	RN(LH)	-0.0400	0.1030
SETN(LH)	RN(LH)	-0.0400	0.1030
SETN(LH)	RN(LH)	-0.0290	0.1090
SETN(LH)	RN(LH)	-0.0290	0.1090
SETN(LH)	RN(LH)	-0.0290	0.1090
SETN(LH)	RN(LH)	-0.0400	0.1030

continues on next page

Table 288 – continued from previous page

SETN(LH)	RN(LH)	-0.0400	0.1030
SETN(LH)	RN(LH)	-0.0400	0.1030
SETN(LH)	RN(LH)	-0.0400	0.1030
SETN(LH)	RN(LH)	-0.0290	0.1090
RN(LH)	SETN(LH)	0.1090	-0.0290
RN(LH)	SETN(LH)	0.1090	-0.0290
RN(LH)	SETN(LH)	0.1090	-0.0290
RN(LH)	SETN(LH)	0.1090	-0.0290
RN(LH)	SETN(LH)	0.1030	-0.0400
RN(LH)	SETN(LH)	0.1030	-0.0400
RN(LH)	SETN(LH)	0.1030	-0.0400
RN(LH)	SETN(LH)	0.1030	-0.0400
RN(LH)	SETN(LH)	0.1090	-0.0290
RN(LH)	SETN(LH)	0.1090	-0.0290
RN(LH)	SETN(LH)	0.1090	-0.0290
RN(LH)	SETN(LH)	0.1030	-0.0400
RN(LH)	SETN(LH)	0.1030	-0.0400
RN(LH)	SETN(LH)	0.1030	-0.0400
RN(LH)	SETN(LH)	0.1030	-0.0400
RN(LH)	SETN(LH)	0.1090	-0.0290

Constraint Pin	Related Pin	recovery(ns)	removal(ns)
SETN(LH)	CLK(LH)	0.0290	0.2120
SETN(LH)	CLK(LH)	0.0290	0.2120
SETN(LH)	CLK(LH)	0.0290	0.2120
SETN(LH)	CLK(LH)	0.0290	0.2120
RN(LH)	CLK(LH)	-0.2000	0.3430
RN(LH)	CLK(LH)	-0.2000	0.3440
RN(LH)	CLK(LH)	-0.2000	0.3430
RN(LH)	CLK(LH)	-0.2000	0.3430

Constraint Pin	Related Pin	Minimum Pulse Width(ns)
CLK(HLH)	CLK(HL)	0.6870
CLK(HLH)	CLK(HL)	0.7170
CLK(HLH)	CLK(HL)	0.6870
CLK(HLH)	CLK(HL)	0.6080
CLK(HLH)	CLK(HL)	0.5400
CLK(HLH)	CLK(HL)	0.7780
CLK(HLH)	CLK(HL)	0.5400
CLK(HLH)	CLK(HL)	0.5770
CLK(LHL)	CLK(LH)	0.4070

continues on next page

Table 289 – continued from previous page

CLK(LHL)	CLK(LH)	0.4070
CLK(LHL)	CLK(LH)	0.4070
CLK(LHL)	CLK(LH)	0.4370
CLK(LHL)	CLK(LH)	0.4370
CLK(LHL)	CLK(LH)	0.4070
CLK(LHL)	CLK(LH)	0.4370
CLK(LHL)	CLK(LH)	0.4370
SETN(HLH)	SETN(HL)	0.4070
SETN(HLH)	SETN(HL)	0.4070
SETN(HLH)	SETN(HL)	0.4070
SETN(HLH)	SETN(HL)	0.4070
SETN(HLH)	SETN(HL)	0.4170
SETN(HLH)	SETN(HL)	0.4170
SETN(HLH)	SETN(HL)	0.4170
SETN(HLH)	SETN(HL)	0.4170
SETN(HLH)	SETN(HL)	0.4070
SETN(HLH)	SETN(HL)	0.4070
SETN(HLH)	SETN(HL)	0.4070
SETN(HLH)	SETN(HL)	0.4170
SETN(HLH)	SETN(HL)	0.4170
SETN(HLH)	SETN(HL)	0.4170
SETN(HLH)	SETN(HL)	0.4170
SETN(HLH)	SETN(HL)	0.4070
RN(HLH)	RN(HL)	0.2710
RN(HLH)	RN(HL)	0.2710
RN(HLH)	RN(HL)	0.2710
RN(HLH)	RN(HL)	0.2710
RN(HLH)	RN(HL)	0.3980
RN(HLH)	RN(HL)	0.3980
RN(HLH)	RN(HL)	0.3980
RN(HLH)	RN(HL)	0.3980
RN(HLH)	RN(HL)	0.2710
RN(HLH)	RN(HL)	0.2710
RN(HLH)	RN(HL)	0.2710
RN(HLH)	RN(HL)	0.3980
RN(HLH)	RN(HL)	0.3980
RN(HLH)	RN(HL)	0.3980
RN(HLH)	RN(HL)	0.3980
RN(HLH)	RN(HL)	0.2710

PIN CAPACITANCE (pf)

Pin	Type	Capacitance (pf)
SE	input	0.0084
SI	input	0.0040
D	input	0.0040
CLK	input	0.0050
SETN	input	0.0084
RN	input	0.0102

DELAY AND OUTPUT TRANSITION TIME corresponding to min slew and load

Input Pin	Output	When Condition	Tin (ns)	Out Load (pf)	Delay (ns)	Tout (ns)
CLK(LH)	Q(HL)	!D&RN&!SE&SETN&!SI	0.0100	0.0010	0.6079	0.0333
CLK(LH)	Q(HL)	!D&RN&!SE&SETN&SI	0.0100	0.0010	0.6079	0.0333
CLK(LH)	Q(HL)	!D&RN&SE&SETN&!SI	0.0100	0.0010	0.6080	0.0333
CLK(LH)	Q(HL)	D&RN&SE&SETN&!SI	0.0100	0.0010	0.6079	0.0333
CLK(LH)	Q(LH)	!D&RN&SE&SETN&SI	0.0100	0.0010	0.6586	0.0443
CLK(LH)	Q(LH)	D&RN&!SE&SETN&!SI	0.0100	0.0010	0.6587	0.0443
CLK(LH)	Q(LH)	D&RN&!SE&SETN&SI	0.0100	0.0010	0.6586	0.0443
CLK(LH)	Q(LH)	D&RN&SE&SETN&SI	0.0100	0.0010	0.6586	0.0443
SETN(HL)	Q(LH)	!CLK&!D&RN&!SE&!SI	0.0100	0.0010	0.5715	0.0444
SETN(HL)	Q(LH)	!CLK&D&RN&SE&!SI	0.0100	0.0010	0.5715	0.0444
SETN(HL)	Q(LH)	!CLK&D&RN&!SE&SI	0.0100	0.0010	0.5719	0.0440
SETN(HL)	Q(LH)	!CLK&D&RN&SE&SI	0.0100	0.0010	0.5719	0.0440
SETN(HL)	Q(LH)	CLK&D&RN&!SE&!SI	0.0100	0.0010	0.6171	0.0443
SETN(HL)	Q(LH)	CLK&D&RN&SE&!SI	0.0100	0.0010	0.6170	0.0441
SETN(HL)	Q(LH)	CLK&D&RN&!SE&SI	0.0100	0.0010	0.6171	0.0443
SETN(HL)	Q(LH)	CLK&D&RN&SE&SI	0.0100	0.0010	0.6171	0.0443
SETN(HL)	Q(LH)	!CLK&!D&RN&SE&!SI	0.0100	0.0010	0.5715	0.0444
SETN(HL)	Q(LH)	!CLK&!D&RN&!SE&SI	0.0100	0.0010	0.5715	0.0444
SETN(HL)	Q(LH)	!CLK&!D&RN&SE&SI	0.0100	0.0010	0.5719	0.0440
SETN(HL)	Q(LH)	CLK&!D&RN&!SE&!SI	0.0100	0.0010	0.6170	0.0441
SETN(HL)	Q(LH)	CLK&!D&RN&SE&!SI	0.0100	0.0010	0.6170	0.0441
SETN(HL)	Q(LH)	CLK&!D&RN&!SE&SI	0.0100	0.0010	0.6170	0.0441
SETN(HL)	Q(LH)	CLK&!D&RN&SE&SI	0.0100	0.0010	0.6171	0.0443
SETN(HL)	Q(LH)	!CLK&D&RN&!SE&!SI	0.0100	0.0010	0.5719	0.0440
RN(HL)	Q(HL)	!CLK&!D&!SE&SETN&!SI	0.0100	0.0010	0.1768	0.0311
RN(HL)	Q(HL)	!CLK&D&SE&SETN&!SI	0.0100	0.0010	0.1768	0.0311
RN(HL)	Q(HL)	!CLK&D&!SE&SETN&SI	0.0100	0.0010	0.1768	0.0311
RN(HL)	Q(HL)	!CLK&D&SE&SETN&SI	0.0100	0.0010	0.1768	0.0311
RN(HL)	Q(HL)	CLK&D&!SE&SETN&!SI	0.0100	0.0010	0.1770	0.0309
RN(HL)	Q(HL)	CLK&D&SE&SETN&!SI	0.0100	0.0010	0.1770	0.0310
RN(HL)	Q(HL)	CLK&D&!SE&SETN&SI	0.0100	0.0010	0.1770	0.0309
RN(HL)	Q(HL)	CLK&D&SE&SETN&SI	0.0100	0.0010	0.1770	0.0309
RN(HL)	Q(HL)	!CLK&!D&!SE&!SETN&!SI	0.0100	0.0010	0.1769	0.0308
RN(HL)	Q(HL)	!CLK&!D&!SE&!SETN&SI	0.0100	0.0010	0.1769	0.0308
RN(HL)	Q(HL)	!CLK&!D&SE&!SETN&!SI	0.0100	0.0010	0.1769	0.0308
RN(HL)	Q(HL)	!CLK&!D&SE&!SETN&SI	0.0100	0.0010	0.1769	0.0308

continues on next page

Table 290 – continued from previous page

RN(HL)	Q(HL)	!CLK&D&!SE&!SETN&!SI	0.0100	0.0010	0.1769	0.0308
RN(HL)	Q(HL)	!CLK&D&!SE&!SETN&SI	0.0100	0.0010	0.1769	0.0308
RN(HL)	Q(HL)	!CLK&D&SE&!SETN&!SI	0.0100	0.0010	0.1769	0.0308
RN(HL)	Q(HL)	!CLK&D&SE&!SETN&SI	0.0100	0.0010	0.1769	0.0308
RN(HL)	Q(HL)	CLK&!D&!SE&!SETN&!SI	0.0100	0.0010	0.1771	0.0308
RN(HL)	Q(HL)	CLK&!D&!SE&!SETN&SI	0.0100	0.0010	0.1771	0.0308
RN(HL)	Q(HL)	CLK&!D&SE&!SETN&!SI	0.0100	0.0010	0.1771	0.0308
RN(HL)	Q(HL)	CLK&!D&SE&!SETN&SI	0.0100	0.0010	0.1771	0.0308
RN(HL)	Q(HL)	CLK&D&!SE&!SETN&!SI	0.0100	0.0010	0.1771	0.0308
RN(HL)	Q(HL)	CLK&D&!SE&!SETN&SI	0.0100	0.0010	0.1771	0.0308
RN(HL)	Q(HL)	CLK&D&SE&!SETN&!SI	0.0100	0.0010	0.1771	0.0308
RN(HL)	Q(HL)	CLK&D&SE&!SETN&SI	0.0100	0.0010	0.1771	0.0308
RN(HL)	Q(HL)	!CLK&!D&SE&SETN&!SI	0.0100	0.0010	0.1768	0.0311
RN(HL)	Q(HL)	!CLK&!D&!SE&SETN&SI	0.0100	0.0010	0.1768	0.0311
RN(HL)	Q(HL)	!CLK&!D&SE&SETN&SI	0.0100	0.0010	0.1768	0.0311
RN(HL)	Q(HL)	CLK&!D&!SE&SETN&!SI	0.0100	0.0010	0.1770	0.0310
RN(HL)	Q(HL)	CLK&!D&SE&SETN&!SI	0.0100	0.0010	0.1770	0.0310
RN(HL)	Q(HL)	CLK&!D&!SE&SETN&SI	0.0100	0.0010	0.1770	0.0310
RN(HL)	Q(HL)	CLK&!D&SE&SETN&SI	0.0100	0.0010	0.1770	0.0309
RN(HL)	Q(HL)	!CLK&D&!SE&SETN&!SI	0.0100	0.0010	0.1768	0.0311
RN(LH)	Q(LH)	!CLK&!D&!SE&!SETN&!SI	0.0100	0.0010	0.3098	0.0431
RN(LH)	Q(LH)	!CLK&!D&!SE&!SETN&SI	0.0100	0.0010	0.3100	0.0431
RN(LH)	Q(LH)	!CLK&!D&SE&!SETN&!SI	0.0100	0.0010	0.3100	0.0428
RN(LH)	Q(LH)	!CLK&!D&SE&!SETN&SI	0.0100	0.0010	0.3100	0.0429
RN(LH)	Q(LH)	!CLK&D&!SE&!SETN&!SI	0.0100	0.0010	0.3100	0.0431
RN(LH)	Q(LH)	!CLK&D&!SE&!SETN&SI	0.0100	0.0010	0.3098	0.0431
RN(LH)	Q(LH)	!CLK&D&SE&!SETN&!SI	0.0100	0.0010	0.3100	0.0429
RN(LH)	Q(LH)	!CLK&D&SE&!SETN&SI	0.0100	0.0010	0.3100	0.0429
RN(LH)	Q(LH)	CLK&!D&!SE&!SETN&!SI	0.0100	0.0010	0.3118	0.0431
RN(LH)	Q(LH)	CLK&!D&!SE&!SETN&SI	0.0100	0.0010	0.3118	0.0431
RN(LH)	Q(LH)	CLK&!D&SE&!SETN&!SI	0.0100	0.0010	0.3118	0.0431
RN(LH)	Q(LH)	CLK&!D&SE&!SETN&SI	0.0100	0.0010	0.3118	0.0431
RN(LH)	Q(LH)	CLK&D&!SE&!SETN&!SI	0.0100	0.0010	0.3118	0.0431
RN(LH)	Q(LH)	CLK&D&!SE&!SETN&SI	0.0100	0.0010	0.3118	0.0431
RN(LH)	Q(LH)	CLK&D&SE&!SETN&!SI	0.0100	0.0010	0.3118	0.0431
RN(LH)	Q(LH)	CLK&D&SE&!SETN&SI	0.0100	0.0010	0.3118	0.0431

DYNAMIC ENERGY

Input Pin	When Condition	Tin (ns)	Output	Out Load (pf)	Energy (uW/MHz)
CLK	!D&RN&!SE&SETN&!SI	0.0100	Q(HL)	0.0010	1.0734
CLK	!D&RN&!SE&SETN&SI	0.0100	Q(HL)	0.0010	1.0734
CLK	!D&RN&SE&SETN&!SI	0.0100	Q(HL)	0.0010	1.0734
CLK	D&RN&SE&SETN&!SI	0.0100	Q(HL)	0.0010	1.0734
CLK	!D&RN&SE&SETN&SI	0.0100	Q(LH)	0.0010	1.1767
CLK	D&RN&!SE&SETN&!SI	0.0100	Q(LH)	0.0010	1.1768
CLK	D&RN&!SE&SETN&SI	0.0100	Q(LH)	0.0010	1.1766

continues on next page

Table 291 – continued from previous page

CLK	D&RN&SE&SETN&SI	0.0100	Q(LH)	0.0010	1.1767
SETN	!CLK&!D&RN&!SE&!SI	0.0100	Q(LH)	0.0010	1.0139
SETN	!CLK&D&RN&SE&!SI	0.0100	Q(LH)	0.0010	1.0140
SETN	!CLK&D&RN&!SE&SI	0.0100	Q(LH)	0.0010	0.8771
SETN	!CLK&D&RN&SE&SI	0.0100	Q(LH)	0.0010	0.8772
SETN	CLK&D&RN&!SE&!SI	0.0100	Q(LH)	0.0010	1.1578
SETN	CLK&D&RN&SE&!SI	0.0100	Q(LH)	0.0010	1.1579
SETN	CLK&D&RN&!SE&SI	0.0100	Q(LH)	0.0010	1.1578
SETN	CLK&D&RN&SE&SI	0.0100	Q(LH)	0.0010	1.1578
SETN	!CLK&!D&RN&SE&!SI	0.0100	Q(LH)	0.0010	1.0140
SETN	!CLK&!D&RN&!SE&SI	0.0100	Q(LH)	0.0010	1.0140
SETN	!CLK&!D&RN&SE&SI	0.0100	Q(LH)	0.0010	0.8772
SETN	CLK&!D&RN&!SE&!SI	0.0100	Q(LH)	0.0010	1.1579
SETN	CLK&!D&RN&SE&!SI	0.0100	Q(LH)	0.0010	1.1579
SETN	CLK&!D&RN&!SE&SI	0.0100	Q(LH)	0.0010	1.1579
SETN	CLK&!D&RN&SE&SI	0.0100	Q(LH)	0.0010	1.1578
SETN	!CLK&D&RN&!SE&!SI	0.0100	Q(LH)	0.0010	0.8771
RN	!CLK&!D&!SE&SETN&!SI	0.0100	Q(HL)	0.0010	0.8105
RN	!CLK&D&SE&SETN&!SI	0.0100	Q(HL)	0.0010	0.8105
RN	!CLK&D&!SE&SETN&SI	0.0100	Q(HL)	0.0010	0.8108
RN	!CLK&D&SE&SETN&SI	0.0100	Q(HL)	0.0010	0.8108
RN	CLK&D&!SE&SETN&!SI	0.0100	Q(HL)	0.0010	1.0980
RN	CLK&D&SE&SETN&!SI	0.0100	Q(HL)	0.0010	1.0988
RN	CLK&D&!SE&SETN&SI	0.0100	Q(HL)	0.0010	1.0980
RN	CLK&D&SE&SETN&SI	0.0100	Q(HL)	0.0010	1.0980
RN	!CLK&!D&!SE&!SETN&!SI	0.0100	Q(HL)	0.0010	0.5949
RN	!CLK&!D&!SE&!SETN&SI	0.0100	Q(HL)	0.0010	0.5949
RN	!CLK&!D&SE&!SETN&!SI	0.0100	Q(HL)	0.0010	0.5949
RN	!CLK&!D&SE&!SETN&SI	0.0100	Q(HL)	0.0010	0.5925
RN	!CLK&D&!SE&!SETN&!SI	0.0100	Q(HL)	0.0010	0.5925
RN	!CLK&D&!SE&!SETN&SI	0.0100	Q(HL)	0.0010	0.5925
RN	!CLK&D&SE&!SETN&!SI	0.0100	Q(HL)	0.0010	0.5949
RN	!CLK&D&SE&!SETN&SI	0.0100	Q(HL)	0.0010	0.5925
RN	CLK&!D&!SE&!SETN&!SI	0.0100	Q(HL)	0.0010	0.7684
RN	CLK&!D&!SE&!SETN&SI	0.0100	Q(HL)	0.0010	0.7684
RN	CLK&!D&SE&!SETN&!SI	0.0100	Q(HL)	0.0010	0.7684
RN	CLK&!D&SE&!SETN&SI	0.0100	Q(HL)	0.0010	0.7684
RN	CLK&D&!SE&!SETN&!SI	0.0100	Q(HL)	0.0010	0.7684
RN	CLK&D&!SE&!SETN&SI	0.0100	Q(HL)	0.0010	0.7684
RN	CLK&D&SE&!SETN&!SI	0.0100	Q(HL)	0.0010	0.7684
RN	CLK&D&SE&!SETN&SI	0.0100	Q(HL)	0.0010	0.7684
RN	!CLK&!D&SE&SETN&!SI	0.0100	Q(HL)	0.0010	0.8105
RN	!CLK&!D&!SE&SETN&SI	0.0100	Q(HL)	0.0010	0.8105
RN	!CLK&!D&SE&SETN&SI	0.0100	Q(HL)	0.0010	0.8108
RN	CLK&!D&!SE&SETN&!SI	0.0100	Q(HL)	0.0010	1.0988
RN	CLK&!D&SE&SETN&!SI	0.0100	Q(HL)	0.0010	1.0988
RN	CLK&!D&!SE&SETN&SI	0.0100	Q(HL)	0.0010	1.0988
RN	CLK&!D&SE&SETN&SI	0.0100	Q(HL)	0.0010	1.0980
RN	!CLK&D&!SE&SETN&!SI	0.0100	Q(HL)	0.0010	0.8108
RN	!CLK&!D&!SE&!SETN&!SI	0.0100	Q(LH)	0.0010	0.4437
RN	!CLK&!D&!SE&!SETN&SI	0.0100	Q(LH)	0.0010	0.4440
RN	!CLK&!D&SE&!SETN&!SI	0.0100	Q(LH)	0.0010	0.4437

continues on next page

Table 291 – continued from previous page

RN	!CLK&!D&SE&!SETN&SI	0.0100	Q(LH)	0.0010	0.4463
RN	!CLK&D&!SE&!SETN&!SI	0.0100	Q(LH)	0.0010	0.4465
RN	!CLK&D&!SE&!SETN&SI	0.0100	Q(LH)	0.0010	0.4460
RN	!CLK&D&SE&!SETN&!SI	0.0100	Q(LH)	0.0010	0.4437
RN	!CLK&D&SE&!SETN&SI	0.0100	Q(LH)	0.0010	0.4463
RN	CLK&!D&!SE&!SETN&!SI	0.0100	Q(LH)	0.0010	0.5854
RN	CLK&!D&!SE&!SETN&SI	0.0100	Q(LH)	0.0010	0.5854
RN	CLK&!D&SE&!SETN&!SI	0.0100	Q(LH)	0.0010	0.5854
RN	CLK&!D&SE&!SETN&SI	0.0100	Q(LH)	0.0010	0.5854
RN	CLK&D&!SE&!SETN&!SI	0.0100	Q(LH)	0.0010	0.5854
RN	CLK&D&!SE&!SETN&SI	0.0100	Q(LH)	0.0010	0.5854
RN	CLK&D&SE&!SETN&!SI	0.0100	Q(LH)	0.0010	0.5854
RN	CLK&D&SE&!SETN&SI	0.0100	Q(LH)	0.0010	0.5854
SETN(HL)	!CLK&!D&!RN&!SE&!SI	0.0100	n/a	n/a	0.4376
SETN(HL)	!CLK&!D&!RN&!SE&SI	0.0100	n/a	n/a	0.4376
SETN(HL)	!CLK&!D&!RN&SE&!SI	0.0100	n/a	n/a	0.4376
SETN(HL)	!CLK&!D&!RN&SE&SI	0.0100	n/a	n/a	0.3106
SETN(HL)	!CLK&D&!RN&!SE&!SI	0.0100	n/a	n/a	0.3106
SETN(HL)	!CLK&D&!RN&!SE&SI	0.0100	n/a	n/a	0.3106
SETN(HL)	!CLK&D&!RN&SE&!SI	0.0100	n/a	n/a	0.4376
SETN(HL)	!CLK&D&!RN&SE&SI	0.0100	n/a	n/a	0.3106
SETN(HL)	CLK&!D&!RN&!SE&!SI	0.0100	n/a	n/a	0.4385
SETN(HL)	CLK&!D&!RN&!SE&SI	0.0100	n/a	n/a	0.4385
SETN(HL)	CLK&!D&!RN&SE&!SI	0.0100	n/a	n/a	0.4385
SETN(HL)	CLK&!D&!RN&SE&SI	0.0100	n/a	n/a	0.4385
SETN(HL)	CLK&D&!RN&!SE&!SI	0.0100	n/a	n/a	0.4385
SETN(HL)	CLK&D&!RN&!SE&SI	0.0100	n/a	n/a	0.4385
SETN(HL)	CLK&D&!RN&SE&!SI	0.0100	n/a	n/a	0.4385
SETN(HL)	CLK&D&!RN&SE&SI	0.0100	n/a	n/a	0.4385
SETN(HL)	CLK&!D&RN&!SE&!SI	0.0100	n/a	n/a	0.0709
SETN(HL)	CLK&!D&RN&SE&!SI	0.0100	n/a	n/a	0.0709
SETN(HL)	CLK&!D&RN&!SE&SI	0.0100	n/a	n/a	0.0709
SETN(HL)	CLK&!D&RN&SE&SI	0.0100	n/a	n/a	0.0709
SETN(HL)	!CLK&D&RN&!SE&!SI	0.0100	n/a	n/a	0.0708
SETN(HL)	!CLK&D&RN&SE&!SI	0.0100	n/a	n/a	0.2074
SETN(HL)	!CLK&D&RN&!SE&SI	0.0100	n/a	n/a	0.0708
SETN(HL)	!CLK&D&RN&SE&SI	0.0100	n/a	n/a	0.0708
SETN(HL)	CLK&D&RN&!SE&!SI	0.0100	n/a	n/a	0.0709
SETN(HL)	CLK&D&RN&SE&!SI	0.0100	n/a	n/a	0.0709
SETN(HL)	!CLK&!D&RN&!SE&!SI	0.0100	n/a	n/a	0.2074
SETN(HL)	CLK&D&RN&!SE&SI	0.0100	n/a	n/a	0.0709
SETN(HL)	CLK&D&RN&SE&SI	0.0100	n/a	n/a	0.0709
SETN(HL)	!CLK&!D&RN&SE&!SI	0.0100	n/a	n/a	0.2074
SETN(HL)	!CLK&!D&RN&!SE&SI	0.0100	n/a	n/a	0.2074
SETN(HL)	!CLK&!D&RN&SE&SI	0.0100	n/a	n/a	0.0708
D(HL)	!CLK&!RN&!SE&!SETN&!SI	0.0100	n/a	n/a	0.2711
D(HL)	!CLK&!RN&!SE&!SETN&SI	0.0100	n/a	n/a	0.2711
D(HL)	!CLK&!RN&!SE&SETN&!SI	0.0100	n/a	n/a	0.4227
D(HL)	!CLK&!RN&!SE&SETN&SI	0.0100	n/a	n/a	0.4226
D(HL)	!CLK&!RN&SE&!SETN&!SI	0.0100	n/a	n/a	0.0328
D(HL)	!CLK&!RN&SE&!SETN&SI	0.0100	n/a	n/a	0.0153
D(HL)	!CLK&!RN&SE&SETN&!SI	0.0100	n/a	n/a	0.0328

continues on next page

Table 291 – continued from previous page

D(HL)	!CLK&!RN&SE&SETN&SI	0.0100	n/a	n/a	0.0153
D(HL)	CLK&!RN&!SE&!SETN&!SI	0.0100	n/a	n/a	0.0367
D(HL)	CLK&!RN&!SE&!SETN&SI	0.0100	n/a	n/a	0.0367
D(HL)	CLK&!RN&!SE&SETN&!SI	0.0100	n/a	n/a	0.0367
D(HL)	CLK&!RN&!SE&SETN&SI	0.0100	n/a	n/a	0.0367
D(HL)	CLK&!RN&SE&!SETN&!SI	0.0100	n/a	n/a	0.0391
D(HL)	CLK&!RN&SE&!SETN&SI	0.0100	n/a	n/a	0.0166
D(HL)	CLK&!RN&SE&SETN&!SI	0.0100	n/a	n/a	0.0391
D(HL)	CLK&!RN&SE&SETN&SI	0.0100	n/a	n/a	0.0166
D(HL)	!CLK&RN&!SE&SETN&!SI	0.0100	n/a	n/a	0.4079
D(HL)	!CLK&RN&SE&SETN&!SI	0.0100	n/a	n/a	0.0328
D(HL)	!CLK&RN&!SE&SETN&SI	0.0100	n/a	n/a	0.4079
D(HL)	!CLK&RN&SE&SETN&SI	0.0100	n/a	n/a	0.0153
D(HL)	CLK&RN&!SE&SETN&!SI	0.0100	n/a	n/a	0.0644
D(HL)	CLK&RN&SE&SETN&!SI	0.0100	n/a	n/a	0.0321
D(HL)	!CLK&RN&!SE&!SETN&!SI	0.0100	n/a	n/a	0.2711
D(HL)	!CLK&RN&!SE&!SETN&SI	0.0100	n/a	n/a	0.2711
D(HL)	!CLK&RN&SE&!SETN&!SI	0.0100	n/a	n/a	0.0328
D(HL)	!CLK&RN&SE&!SETN&SI	0.0100	n/a	n/a	0.0153
D(HL)	CLK&RN&!SE&!SETN&!SI	0.0100	n/a	n/a	0.0322
D(HL)	CLK&RN&!SE&!SETN&SI	0.0100	n/a	n/a	0.0322
D(HL)	CLK&RN&SE&!SETN&!SI	0.0100	n/a	n/a	0.0321
D(HL)	CLK&RN&SE&!SETN&SI	0.0100	n/a	n/a	0.0166
D(HL)	CLK&RN&!SE&SETN&SI	0.0100	n/a	n/a	0.0644
D(HL)	CLK&RN&SE&SETN&SI	0.0100	n/a	n/a	0.0137
SE(HL)	!CLK&!D&!RN&!SETN&!SI	0.0100	n/a	n/a	0.1942
SE(HL)	!CLK&!D&!RN&!SETN&SI	0.0100	n/a	n/a	0.4565
SE(HL)	!CLK&!D&!RN&SETN&!SI	0.0100	n/a	n/a	0.1942
SE(HL)	!CLK&!D&!RN&SETN&SI	0.0100	n/a	n/a	0.6080
SE(HL)	!CLK&D&!RN&!SETN&!SI	0.0100	n/a	n/a	0.3247
SE(HL)	!CLK&D&!RN&!SETN&SI	0.0100	n/a	n/a	0.1971
SE(HL)	!CLK&D&!RN&SETN&!SI	0.0100	n/a	n/a	0.5031
SE(HL)	!CLK&D&!RN&SETN&SI	0.0100	n/a	n/a	0.1971
SE(HL)	CLK&!D&!RN&!SETN&!SI	0.0100	n/a	n/a	0.2023
SE(HL)	CLK&!D&!RN&!SETN&SI	0.0100	n/a	n/a	0.1986
SE(HL)	CLK&!D&!RN&SETN&!SI	0.0100	n/a	n/a	0.2022
SE(HL)	CLK&!D&!RN&SETN&SI	0.0100	n/a	n/a	0.1987
SE(HL)	CLK&D&!RN&!SETN&!SI	0.0100	n/a	n/a	0.1981
SE(HL)	CLK&D&!RN&!SETN&SI	0.0100	n/a	n/a	0.1991
SE(HL)	CLK&D&!RN&SETN&!SI	0.0100	n/a	n/a	0.1981
SE(HL)	CLK&D&!RN&SETN&SI	0.0100	n/a	n/a	0.1991
SE(HL)	CLK&!D&RN&SETN&!SI	0.0100	n/a	n/a	0.1936
SE(HL)	CLK&!D&RN&SETN&SI	0.0100	n/a	n/a	0.2504
SE(HL)	!CLK&!D&RN&!SETN&!SI	0.0100	n/a	n/a	0.1943
SE(HL)	!CLK&!D&RN&!SETN&SI	0.0100	n/a	n/a	0.4564
SE(HL)	!CLK&D&RN&!SETN&!SI	0.0100	n/a	n/a	0.3247
SE(HL)	!CLK&D&RN&!SETN&SI	0.0100	n/a	n/a	0.1971
SE(HL)	CLK&!D&RN&!SETN&!SI	0.0100	n/a	n/a	0.1936
SE(HL)	CLK&!D&RN&!SETN&SI	0.0100	n/a	n/a	0.1942
SE(HL)	CLK&D&RN&!SETN&!SI	0.0100	n/a	n/a	0.1979
SE(HL)	CLK&D&RN&!SETN&SI	0.0100	n/a	n/a	0.2052
SE(HL)	!CLK&D&RN&SETN&!SI	0.0100	n/a	n/a	0.5128

continues on next page

Table 291 – continued from previous page

SE(HL)	!CLK&D&RN&SETN&SI	0.0100	n/a	n/a	0.1969
SE(HL)	CLK&D&RN&SETN&!SI	0.0100	n/a	n/a	0.2001
SE(HL)	CLK&D&RN&SETN&SI	0.0100	n/a	n/a	0.1966
SE(HL)	!CLK&!D&RN&SETN&!SI	0.0100	n/a	n/a	0.1943
SE(HL)	!CLK&!D&RN&SETN&SI	0.0100	n/a	n/a	0.5930
SE(LH)	!CLK&!D&!RN&!SETN&!SI	0.0100	n/a	n/a	0.0029
SE(LH)	!CLK&!D&!RN&!SETN&SI	0.0100	n/a	n/a	0.1253
SE(LH)	!CLK&!D&!RN&SETN&!SI	0.0100	n/a	n/a	0.0029
SE(LH)	!CLK&!D&!RN&SETN&SI	0.0100	n/a	n/a	0.3103
SE(LH)	!CLK&D&!RN&!SETN&!SI	0.0100	n/a	n/a	0.2835
SE(LH)	!CLK&D&!RN&!SETN&SI	0.0100	n/a	n/a	-0.0119
SE(LH)	!CLK&D&!RN&SETN&!SI	0.0100	n/a	n/a	0.4509
SE(LH)	!CLK&D&!RN&SETN&SI	0.0100	n/a	n/a	-0.0119
SE(LH)	CLK&!D&!RN&!SETN&!SI	0.0100	n/a	n/a	0.0000
SE(LH)	CLK&!D&!RN&!SETN&SI	0.0100	n/a	n/a	-0.0088
SE(LH)	CLK&!D&!RN&SETN&!SI	0.0100	n/a	n/a	0.0000
SE(LH)	CLK&!D&!RN&SETN&SI	0.0100	n/a	n/a	-0.0088
SE(LH)	CLK&D&!RN&!SETN&!SI	0.0100	n/a	n/a	0.0009
SE(LH)	CLK&D&!RN&!SETN&SI	0.0100	n/a	n/a	-0.0128
SE(LH)	CLK&D&!RN&SETN&!SI	0.0100	n/a	n/a	0.0009
SE(LH)	CLK&D&!RN&SETN&SI	0.0100	n/a	n/a	-0.0128
SE(LH)	CLK&!D&RN&SETN&!SI	0.0100	n/a	n/a	0.0000
SE(LH)	CLK&!D&RN&SETN&SI	0.0100	n/a	n/a	-0.0088
SE(LH)	!CLK&!D&RN&!SETN&!SI	0.0100	n/a	n/a	0.0029
SE(LH)	!CLK&!D&RN&!SETN&SI	0.0100	n/a	n/a	0.1253
SE(LH)	!CLK&D&RN&!SETN&!SI	0.0100	n/a	n/a	0.2835
SE(LH)	!CLK&D&RN&!SETN&SI	0.0100	n/a	n/a	-0.0119
SE(LH)	CLK&!D&RN&!SETN&!SI	0.0100	n/a	n/a	0.0000
SE(LH)	CLK&!D&RN&!SETN&SI	0.0100	n/a	n/a	-0.0088
SE(LH)	CLK&D&RN&!SETN&!SI	0.0100	n/a	n/a	0.0009
SE(LH)	CLK&D&RN&!SETN&SI	0.0100	n/a	n/a	-0.0128
SE(LH)	!CLK&D&RN&SETN&!SI	0.0100	n/a	n/a	0.4352
SE(LH)	!CLK&D&RN&SETN&SI	0.0100	n/a	n/a	-0.0119
SE(LH)	CLK&D&RN&SETN&!SI	0.0100	n/a	n/a	0.0358
SE(LH)	CLK&D&RN&SETN&SI	0.0100	n/a	n/a	-0.0153
SE(LH)	!CLK&!D&RN&SETN&!SI	0.0100	n/a	n/a	0.0029
SE(LH)	!CLK&!D&RN&SETN&SI	0.0100	n/a	n/a	0.3198
CLK(LH)	!D&!RN&!SE&!SETN&!SI	0.0100	n/a	n/a	0.3172
CLK(LH)	!D&!RN&!SE&!SETN&SI	0.0100	n/a	n/a	0.3172
CLK(LH)	!D&!RN&!SE&SETN&!SI	0.0100	n/a	n/a	0.2995
CLK(LH)	!D&!RN&!SE&SETN&SI	0.0100	n/a	n/a	0.2995
CLK(LH)	!D&!RN&SE&!SETN&!SI	0.0100	n/a	n/a	0.3172
CLK(LH)	!D&!RN&SE&!SETN&SI	0.0100	n/a	n/a	0.4363
CLK(LH)	!D&!RN&SE&SETN&!SI	0.0100	n/a	n/a	0.2994
CLK(LH)	!D&!RN&SE&SETN&SI	0.0100	n/a	n/a	0.6457
CLK(LH)	D&!RN&!SE&!SETN&!SI	0.0100	n/a	n/a	0.4362
CLK(LH)	D&!RN&!SE&!SETN&SI	0.0100	n/a	n/a	0.4362
CLK(LH)	D&!RN&!SE&SETN&!SI	0.0100	n/a	n/a	0.6454
CLK(LH)	D&!RN&!SE&SETN&SI	0.0100	n/a	n/a	0.6454
CLK(LH)	D&!RN&SE&!SETN&!SI	0.0100	n/a	n/a	0.3172
CLK(LH)	D&!RN&SE&!SETN&SI	0.0100	n/a	n/a	0.4364
CLK(LH)	D&!RN&SE&SETN&!SI	0.0100	n/a	n/a	0.2995

continues on next page

Table 291 – continued from previous page

CLK(LH)	D&!RN&SE&SETN&SI	0.0100	n/a	n/a	0.6456
CLK(LH)	!D&RN&!SE&SETN&!SI	0.0100	n/a	n/a	0.2993
CLK(LH)	!D&RN&SE&SETN&!SI	0.0100	n/a	n/a	0.2993
CLK(LH)	!D&RN&!SE&SETN&SI	0.0100	n/a	n/a	0.2993
CLK(LH)	!D&RN&SE&SETN&SI	0.0100	n/a	n/a	0.3217
CLK(LH)	D&RN&!SE&SETN&!SI	0.0100	n/a	n/a	0.3215
CLK(LH)	D&RN&SE&SETN&!SI	0.0100	n/a	n/a	0.2993
CLK(LH)	!D&RN&!SE&!SETN&!SI	0.0100	n/a	n/a	0.4084
CLK(LH)	!D&RN&!SE&!SETN&SI	0.0100	n/a	n/a	0.4084
CLK(LH)	!D&RN&SE&!SETN&!SI	0.0100	n/a	n/a	0.4087
CLK(LH)	!D&RN&SE&!SETN&SI	0.0100	n/a	n/a	0.3219
CLK(LH)	D&RN&!SE&!SETN&!SI	0.0100	n/a	n/a	0.3216
CLK(LH)	D&RN&!SE&!SETN&SI	0.0100	n/a	n/a	0.3217
CLK(LH)	D&RN&SE&!SETN&!SI	0.0100	n/a	n/a	0.4084
CLK(LH)	D&RN&SE&!SETN&SI	0.0100	n/a	n/a	0.3218
CLK(LH)	D&RN&!SE&SETN&SI	0.0100	n/a	n/a	0.3216
CLK(LH)	D&RN&SE&SETN&SI	0.0100	n/a	n/a	0.3217
SI(LH)	!CLK&!D&!RN&!SE&!SETN	0.0100	n/a	n/a	-0.0316
SI(LH)	!CLK&!D&!RN&!SE&SETN	0.0100	n/a	n/a	-0.0316
SI(LH)	!CLK&!D&!RN&SE&!SETN	0.0100	n/a	n/a	0.1240
SI(LH)	!CLK&!D&!RN&SE&SETN	0.0100	n/a	n/a	0.3110
SI(LH)	!CLK&D&!RN&!SE&!SETN	0.0100	n/a	n/a	-0.0293
SI(LH)	!CLK&D&!RN&!SE&SETN	0.0100	n/a	n/a	-0.0293
SI(LH)	!CLK&D&!RN&SE&!SETN	0.0100	n/a	n/a	0.1081
SI(LH)	!CLK&D&!RN&SE&SETN	0.0100	n/a	n/a	0.2919
SI(LH)	CLK&!D&!RN&!SE&!SETN	0.0100	n/a	n/a	-0.0316
SI(LH)	CLK&!D&!RN&!SE&SETN	0.0100	n/a	n/a	-0.0316
SI(LH)	CLK&!D&!RN&SE&!SETN	0.0100	n/a	n/a	-0.0258
SI(LH)	CLK&!D&!RN&SE&SETN	0.0100	n/a	n/a	-0.0259
SI(LH)	CLK&D&!RN&!SE&!SETN	0.0100	n/a	n/a	-0.0304
SI(LH)	CLK&D&!RN&!SE&SETN	0.0100	n/a	n/a	-0.0304
SI(LH)	CLK&D&!RN&SE&!SETN	0.0100	n/a	n/a	-0.0260
SI(LH)	CLK&D&!RN&SE&SETN	0.0100	n/a	n/a	-0.0261
SI(LH)	CLK&!D&RN&!SE&SETN	0.0100	n/a	n/a	-0.0316
SI(LH)	CLK&!D&RN&SE&SETN	0.0100	n/a	n/a	-0.0259
SI(LH)	!CLK&D&RN&!SE&SETN	0.0100	n/a	n/a	-0.0293
SI(LH)	!CLK&D&RN&SE&SETN	0.0100	n/a	n/a	0.3013
SI(LH)	!CLK&!D&RN&!SE&!SETN	0.0100	n/a	n/a	-0.0316
SI(LH)	!CLK&!D&RN&SE&!SETN	0.0100	n/a	n/a	0.1240
SI(LH)	!CLK&D&RN&!SE&!SETN	0.0100	n/a	n/a	-0.0293
SI(LH)	!CLK&D&RN&SE&!SETN	0.0100	n/a	n/a	0.1081
SI(LH)	CLK&!D&RN&!SE&!SETN	0.0100	n/a	n/a	-0.0316
SI(LH)	CLK&!D&RN&SE&!SETN	0.0100	n/a	n/a	-0.0258
SI(LH)	CLK&D&RN&!SE&!SETN	0.0100	n/a	n/a	-0.0304
SI(LH)	CLK&D&RN&SE&!SETN	0.0100	n/a	n/a	-0.0260
SI(LH)	CLK&D&RN&!SE&SETN	0.0100	n/a	n/a	-0.0297
SI(LH)	CLK&D&RN&SE&SETN	0.0100	n/a	n/a	-0.0261
SI(LH)	!CLK&!D&RN&!SE&SETN	0.0100	n/a	n/a	-0.0316
SI(LH)	!CLK&!D&RN&SE&SETN	0.0100	n/a	n/a	0.3205
CLK(HL)	!D&!RN&!SE&!SETN&!SI	0.0100	n/a	n/a	0.4777
CLK(HL)	!D&!RN&!SE&!SETN&SI	0.0100	n/a	n/a	0.4777
CLK(HL)	!D&!RN&!SE&SETN&!SI	0.0100	n/a	n/a	0.4708

continues on next page

Table 291 – continued from previous page

CLK(HL)	!D&!RN&!SE&SETN&SI	0.0100	n/a	n/a	0.4708
CLK(HL)	!D&!RN&SE&!SETN&!SI	0.0100	n/a	n/a	0.5062
CLK(HL)	!D&!RN&SE&!SETN&SI	0.0100	n/a	n/a	0.5497
CLK(HL)	!D&!RN&SE&SETN&!SI	0.0100	n/a	n/a	0.4999
CLK(HL)	!D&!RN&SE&SETN&SI	0.0100	n/a	n/a	0.7332
CLK(HL)	D&!RN&!SE&!SETN&!SI	0.0100	n/a	n/a	0.5205
CLK(HL)	D&!RN&!SE&!SETN&SI	0.0100	n/a	n/a	0.5205
CLK(HL)	D&!RN&!SE&SETN&!SI	0.0100	n/a	n/a	0.6925
CLK(HL)	D&!RN&!SE&SETN&SI	0.0100	n/a	n/a	0.6925
CLK(HL)	D&!RN&SE&!SETN&!SI	0.0100	n/a	n/a	0.5346
CLK(HL)	D&!RN&SE&!SETN&SI	0.0100	n/a	n/a	0.5340
CLK(HL)	D&!RN&SE&SETN&!SI	0.0100	n/a	n/a	0.5333
CLK(HL)	D&!RN&SE&SETN&SI	0.0100	n/a	n/a	0.7126
CLK(HL)	!D&RN&!SE&SETN&!SI	0.0100	n/a	n/a	0.4093
CLK(HL)	!D&RN&SE&SETN&!SI	0.0100	n/a	n/a	0.4093
CLK(HL)	!D&RN&!SE&SETN&SI	0.0100	n/a	n/a	0.4093
CLK(HL)	!D&RN&SE&SETN&SI	0.0100	n/a	n/a	0.4084
CLK(HL)	D&RN&!SE&SETN&!SI	0.0100	n/a	n/a	0.4086
CLK(HL)	D&RN&SE&SETN&!SI	0.0100	n/a	n/a	0.4093
CLK(HL)	!D&RN&!SE&!SETN&!SI	0.0100	n/a	n/a	0.6062
CLK(HL)	!D&RN&!SE&!SETN&SI	0.0100	n/a	n/a	0.6062
CLK(HL)	!D&RN&SE&!SETN&!SI	0.0100	n/a	n/a	0.6340
CLK(HL)	!D&RN&SE&!SETN&SI	0.0100	n/a	n/a	0.4692
CLK(HL)	D&RN&!SE&!SETN&!SI	0.0100	n/a	n/a	0.4400
CLK(HL)	D&RN&!SE&!SETN&SI	0.0100	n/a	n/a	0.4400
CLK(HL)	D&RN&SE&!SETN&!SI	0.0100	n/a	n/a	0.6613
CLK(HL)	D&RN&SE&!SETN&SI	0.0100	n/a	n/a	0.4534
CLK(HL)	D&RN&!SE&SETN&SI	0.0100	n/a	n/a	0.4086
CLK(HL)	D&RN&SE&SETN&SI	0.0100	n/a	n/a	0.4084
SI(HL)	!CLK&!D&!RN&!SE&!SETN	0.0100	n/a	n/a	0.0324
SI(HL)	!CLK&!D&!RN&!SE&SETN	0.0100	n/a	n/a	0.0324
SI(HL)	!CLK&!D&!RN&SE&!SETN	0.0100	n/a	n/a	0.3438
SI(HL)	!CLK&!D&!RN&SE&SETN	0.0100	n/a	n/a	0.5059
SI(HL)	!CLK&D&!RN&!SE&!SETN	0.0100	n/a	n/a	0.0320
SI(HL)	!CLK&D&!RN&!SE&SETN	0.0100	n/a	n/a	0.0321
SI(HL)	!CLK&D&!RN&SE&!SETN	0.0100	n/a	n/a	0.3490
SI(HL)	!CLK&D&!RN&SE&SETN	0.0100	n/a	n/a	0.5164
SI(HL)	CLK&!D&!RN&!SE&!SETN	0.0100	n/a	n/a	0.0321
SI(HL)	CLK&!D&!RN&!SE&SETN	0.0100	n/a	n/a	0.0321
SI(HL)	CLK&!D&!RN&SE&!SETN	0.0100	n/a	n/a	0.0323
SI(HL)	CLK&!D&!RN&SE&SETN	0.0100	n/a	n/a	0.0323
SI(HL)	CLK&D&!RN&!SE&!SETN	0.0100	n/a	n/a	0.0321
SI(HL)	CLK&D&!RN&!SE&SETN	0.0100	n/a	n/a	0.0321
SI(HL)	CLK&D&!RN&SE&!SETN	0.0100	n/a	n/a	0.0322
SI(HL)	CLK&D&!RN&SE&SETN	0.0100	n/a	n/a	0.0322
SI(HL)	CLK&!D&RN&!SE&SETN	0.0100	n/a	n/a	0.0321
SI(HL)	CLK&!D&RN&SE&SETN	0.0100	n/a	n/a	0.1135
SI(HL)	!CLK&D&RN&!SE&SETN	0.0100	n/a	n/a	0.0321
SI(HL)	!CLK&D&RN&SE&SETN	0.0100	n/a	n/a	0.5007
SI(HL)	!CLK&!D&RN&!SE&!SETN	0.0100	n/a	n/a	0.0324
SI(HL)	!CLK&!D&RN&SE&!SETN	0.0100	n/a	n/a	0.3438
SI(HL)	!CLK&D&RN&!SE&!SETN	0.0100	n/a	n/a	0.0321

continues on next page

Table 291 – continued from previous page

SI(HL)	!CLK&D&RN&SE&!SETN	0.0100	n/a	n/a	0.3490
SI(HL)	CLK&!D&RN&!SE&!SETN	0.0100	n/a	n/a	0.0321
SI(HL)	CLK&!D&RN&SE&!SETN	0.0100	n/a	n/a	0.0322
SI(HL)	CLK&D&RN&!SE&!SETN	0.0100	n/a	n/a	0.0321
SI(HL)	CLK&D&RN&SE&!SETN	0.0100	n/a	n/a	0.0322
SI(HL)	CLK&D&RN&!SE&SETN	0.0100	n/a	n/a	0.0320
SI(HL)	CLK&D&RN&SE&SETN	0.0100	n/a	n/a	0.0903
SI(HL)	!CLK&!D&RN&!SE&SETN	0.0100	n/a	n/a	0.0324
SI(HL)	!CLK&!D&RN&SE&SETN	0.0100	n/a	n/a	0.4905
D(LH)	!CLK&!RN&!SE&!SETN&!SI	0.0100	n/a	n/a	0.0981
D(LH)	!CLK&!RN&!SE&!SETN&SI	0.0100	n/a	n/a	0.0981
D(LH)	!CLK&!RN&!SE&SETN&!SI	0.0100	n/a	n/a	0.2766
D(LH)	!CLK&!RN&!SE&SETN&SI	0.0100	n/a	n/a	0.2766
D(LH)	!CLK&!RN&SE&!SETN&!SI	0.0100	n/a	n/a	-0.0289
D(LH)	!CLK&!RN&SE&!SETN&SI	0.0100	n/a	n/a	-0.0103
D(LH)	!CLK&!RN&SE&SETN&!SI	0.0100	n/a	n/a	-0.0289
D(LH)	!CLK&!RN&SE&SETN&SI	0.0100	n/a	n/a	-0.0103
D(LH)	CLK&!RN&!SE&!SETN&!SI	0.0100	n/a	n/a	-0.0277
D(LH)	CLK&!RN&!SE&!SETN&SI	0.0100	n/a	n/a	-0.0275
D(LH)	CLK&!RN&!SE&SETN&!SI	0.0100	n/a	n/a	-0.0277
D(LH)	CLK&!RN&!SE&SETN&SI	0.0100	n/a	n/a	-0.0275
D(LH)	CLK&!RN&SE&!SETN&!SI	0.0100	n/a	n/a	-0.0313
D(LH)	CLK&!RN&SE&!SETN&SI	0.0100	n/a	n/a	-0.0221
D(LH)	CLK&!RN&SE&SETN&!SI	0.0100	n/a	n/a	-0.0313
D(LH)	CLK&!RN&SE&SETN&SI	0.0100	n/a	n/a	-0.0221
D(LH)	!CLK&RN&!SE&SETN&!SI	0.0100	n/a	n/a	0.2862
D(LH)	!CLK&RN&SE&SETN&!SI	0.0100	n/a	n/a	-0.0289
D(LH)	!CLK&RN&!SE&SETN&SI	0.0100	n/a	n/a	0.2862
D(LH)	!CLK&RN&SE&SETN&SI	0.0100	n/a	n/a	-0.0103
D(LH)	CLK&RN&!SE&SETN&!SI	0.0100	n/a	n/a	-0.0277
D(LH)	CLK&RN&SE&SETN&!SI	0.0100	n/a	n/a	-0.0313
D(LH)	!CLK&RN&!SE&!SETN&!SI	0.0100	n/a	n/a	0.0981
D(LH)	!CLK&RN&!SE&!SETN&SI	0.0100	n/a	n/a	0.0981
D(LH)	!CLK&RN&SE&!SETN&!SI	0.0100	n/a	n/a	-0.0289
D(LH)	!CLK&RN&SE&!SETN&SI	0.0100	n/a	n/a	-0.0103
D(LH)	CLK&RN&!SE&!SETN&!SI	0.0100	n/a	n/a	-0.0251
D(LH)	CLK&RN&!SE&!SETN&SI	0.0100	n/a	n/a	-0.0250
D(LH)	CLK&RN&SE&!SETN&!SI	0.0100	n/a	n/a	-0.0313
D(LH)	CLK&RN&SE&!SETN&SI	0.0100	n/a	n/a	-0.0216
D(LH)	CLK&RN&!SE&SETN&SI	0.0100	n/a	n/a	-0.0274
D(LH)	CLK&RN&SE&SETN&SI	0.0100	n/a	n/a	-0.0108
RN(HL)	!CLK&!D&!SE&SETN&!SI	0.0100	n/a	n/a	0.0956
RN(HL)	!CLK&D&SE&SETN&!SI	0.0100	n/a	n/a	0.0956
RN(HL)	!CLK&D&!SE&SETN&SI	0.0100	n/a	n/a	0.0951
RN(HL)	!CLK&D&SE&SETN&SI	0.0100	n/a	n/a	0.0951
RN(HL)	CLK&D&!SE&SETN&!SI	0.0100	n/a	n/a	0.0976
RN(HL)	CLK&D&SE&SETN&!SI	0.0100	n/a	n/a	0.0978
RN(HL)	CLK&D&!SE&SETN&SI	0.0100	n/a	n/a	0.0976
RN(HL)	CLK&D&SE&SETN&SI	0.0100	n/a	n/a	0.0976
RN(HL)	!CLK&!D&SE&SETN&!SI	0.0100	n/a	n/a	0.0956
RN(HL)	!CLK&!D&!SE&SETN&SI	0.0100	n/a	n/a	0.0956
RN(HL)	!CLK&!D&SE&SETN&SI	0.0100	n/a	n/a	0.0951

continues on next page

Table 291 – continued from previous page

RN(HL)	CLK&!D&!SE&SETN&!SI	0.0100	n/a	n/a	0.0978
RN(HL)	CLK&!D&SE&SETN&!SI	0.0100	n/a	n/a	0.0978
RN(HL)	CLK&!D&!SE&SETN&SI	0.0100	n/a	n/a	0.0978
RN(HL)	CLK&!D&SE&SETN&SI	0.0100	n/a	n/a	0.0977
RN(HL)	!CLK&D&!SE&SETN&!SI	0.0100	n/a	n/a	0.0951
RN(LH)	!CLK&!D&!SE&SETN&!SI	0.0100	n/a	n/a	-0.0916
RN(LH)	!CLK&!D&!SE&SETN&SI	0.0100	n/a	n/a	-0.0916
RN(LH)	!CLK&!D&SE&SETN&!SI	0.0100	n/a	n/a	-0.0916
RN(LH)	!CLK&!D&SE&SETN&SI	0.0100	n/a	n/a	-0.0868
RN(LH)	!CLK&D&!SE&SETN&!SI	0.0100	n/a	n/a	-0.0868
RN(LH)	!CLK&D&!SE&SETN&SI	0.0100	n/a	n/a	-0.0868
RN(LH)	!CLK&D&SE&SETN&!SI	0.0100	n/a	n/a	-0.0916
RN(LH)	!CLK&D&SE&SETN&SI	0.0100	n/a	n/a	-0.0868
RN(LH)	CLK&!D&!SE&SETN&!SI	0.0100	n/a	n/a	-0.0916
RN(LH)	CLK&!D&!SE&SETN&SI	0.0100	n/a	n/a	-0.0916
RN(LH)	CLK&!D&SE&SETN&!SI	0.0100	n/a	n/a	-0.0916
RN(LH)	CLK&!D&SE&SETN&SI	0.0100	n/a	n/a	-0.0916
RN(LH)	CLK&D&!SE&SETN&!SI	0.0100	n/a	n/a	-0.0916
RN(LH)	CLK&D&!SE&SETN&SI	0.0100	n/a	n/a	-0.0916
RN(LH)	CLK&D&SE&SETN&!SI	0.0100	n/a	n/a	-0.0916
RN(LH)	CLK&D&SE&SETN&SI	0.0100	n/a	n/a	-0.0916
SETN(LH)	!CLK&!D&!RN&!SE&!SI	0.0100	n/a	n/a	0.2151
SETN(LH)	!CLK&!D&!RN&!SE&SI	0.0100	n/a	n/a	0.2151
SETN(LH)	!CLK&!D&!RN&SE&!SI	0.0100	n/a	n/a	0.2151
SETN(LH)	!CLK&!D&!RN&SE&SI	0.0100	n/a	n/a	0.1181
SETN(LH)	!CLK&D&!RN&!SE&!SI	0.0100	n/a	n/a	0.1181
SETN(LH)	!CLK&D&!RN&!SE&SI	0.0100	n/a	n/a	0.1181
SETN(LH)	!CLK&D&!RN&SE&!SI	0.0100	n/a	n/a	0.2151
SETN(LH)	!CLK&D&!RN&SE&SI	0.0100	n/a	n/a	0.1181
SETN(LH)	CLK&!D&!RN&!SE&!SI	0.0100	n/a	n/a	0.2053
SETN(LH)	CLK&!D&!RN&!SE&SI	0.0100	n/a	n/a	0.2053
SETN(LH)	CLK&!D&!RN&SE&!SI	0.0100	n/a	n/a	0.2053
SETN(LH)	CLK&!D&!RN&SE&SI	0.0100	n/a	n/a	0.2053
SETN(LH)	CLK&D&!RN&!SE&!SI	0.0100	n/a	n/a	0.2053
SETN(LH)	CLK&D&!RN&!SE&SI	0.0100	n/a	n/a	0.2053
SETN(LH)	CLK&D&!RN&SE&!SI	0.0100	n/a	n/a	0.2053
SETN(LH)	CLK&D&!RN&SE&SI	0.0100	n/a	n/a	0.2053
SETN(LH)	!CLK&!D&RN&!SE&!SI	0.0100	n/a	n/a	0.0359
SETN(LH)	!CLK&!D&RN&!SE&SI	0.0100	n/a	n/a	0.0359
SETN(LH)	!CLK&!D&RN&SE&!SI	0.0100	n/a	n/a	0.0359
SETN(LH)	!CLK&!D&RN&SE&SI	0.0100	n/a	n/a	-0.0483
SETN(LH)	!CLK&D&RN&!SE&!SI	0.0100	n/a	n/a	-0.0483
SETN(LH)	!CLK&D&RN&!SE&SI	0.0100	n/a	n/a	-0.0483
SETN(LH)	!CLK&D&RN&SE&!SI	0.0100	n/a	n/a	0.0359
SETN(LH)	!CLK&D&RN&SE&SI	0.0100	n/a	n/a	-0.0483
SETN(LH)	CLK&!D&RN&!SE&!SI	0.0100	n/a	n/a	-0.0483
SETN(LH)	CLK&!D&RN&!SE&SI	0.0100	n/a	n/a	-0.0483
SETN(LH)	CLK&!D&RN&SE&!SI	0.0100	n/a	n/a	-0.0483
SETN(LH)	CLK&!D&RN&SE&SI	0.0100	n/a	n/a	-0.0483
SETN(LH)	CLK&D&RN&!SE&!SI	0.0100	n/a	n/a	-0.0483
SETN(LH)	CLK&D&RN&!SE&SI	0.0100	n/a	n/a	-0.0483
SETN(LH)	CLK&D&RN&SE&!SI	0.0100	n/a	n/a	-0.0483

continues on next page

Table 291 – continued from previous page

SETN(LH)	CLK&D&RN&SE&SI	0.0100	n/a	n/a	-0.0483

LEAKAGE POWER

When Condition	Power (nW)
!CLK&!D&!RN&!SE&!SETN&!SI	0.5082
!CLK&!D&!RN&!SE&!SETN&SI	0.5084
!CLK&!D&!RN&!SE&SETN&!SI	0.5254
!CLK&!D&!RN&!SE&SETN&SI	0.5255
!CLK&!D&!RN&SE&!SETN&!SI	0.5484
!CLK&!D&!RN&SE&!SETN&SI	0.5761
!CLK&!D&!RN&SE&SETN&!SI	0.5656
!CLK&!D&!RN&SE&SETN&SI	0.6055
!CLK&D&!RN&!SE&!SETN&!SI	0.5045
!CLK&D&!RN&!SE&!SETN&SI	0.5045
!CLK&D&!RN&!SE&SETN&!SI	0.5339
!CLK&D&!RN&!SE&SETN&SI	0.5339
!CLK&D&!RN&SE&!SETN&!SI	0.5879
!CLK&D&!RN&SE&!SETN&SI	0.5407
!CLK&D&!RN&SE&SETN&!SI	0.6051
!CLK&D&!RN&SE&SETN&SI	0.5702
CLK&!D&!RN&!SE&!SETN&!SI	0.5276
CLK&!D&!RN&!SE&!SETN&SI	0.5276
CLK&!D&!RN&!SE&SETN&!SI	0.5053
CLK&!D&!RN&!SE&SETN&SI	0.5053
CLK&!D&!RN&SE&!SETN&!SI	0.5285
CLK&!D&!RN&SE&!SETN&SI	0.5287
CLK&!D&!RN&SE&SETN&!SI	0.5062
CLK&!D&!RN&SE&SETN&SI	0.5065
CLK&D&!RN&!SE&!SETN&!SI	0.5278
CLK&D&!RN&!SE&!SETN&SI	0.5278
CLK&D&!RN&!SE&SETN&!SI	0.5055
CLK&D&!RN&!SE&SETN&SI	0.5055
CLK&D&!RN&SE&!SETN&!SI	0.5285
CLK&D&!RN&SE&!SETN&SI	0.5287
CLK&D&!RN&SE&SETN&!SI	0.5062
CLK&D&!RN&SE&SETN&SI	0.5065
!CLK&!D&RN&!SE&SETN&!SI	0.7240
!CLK&!D&RN&!SE&SETN&SI	0.7242
!CLK&!D&RN&SE&SETN&!SI	0.7643
!CLK&!D&RN&SE&SETN&SI	0.7686
!CLK&D&RN&!SE&SETN&!SI	0.6969
!CLK&D&RN&!SE&SETN&SI	0.6969
!CLK&D&RN&SE&SETN&!SI	0.8037
!CLK&D&RN&SE&SETN&SI	0.7332
CLK&!D&RN&!SE&SETN&!SI	0.5461
CLK&!D&RN&!SE&SETN&SI	0.5461

continues on next page

Table 292 – continued from previous page

CLK&!D&RN&SE&SETN&!SI	0.5469
CLK&D&RN&SE&SETN&!SI	0.5469
!CLK&!D&RN&!SE&!SETN&!SI	0.4941
!CLK&!D&RN&!SE&!SETN&SI	0.4943
!CLK&!D&RN&SE&!SETN&!SI	0.5343
!CLK&!D&RN&SE&!SETN&SI	0.5617
!CLK&D&RN&!SE&!SETN&!SI	0.4901
!CLK&D&RN&!SE&!SETN&SI	0.4901
!CLK&D&RN&SE&!SETN&!SI	0.5738
!CLK&D&RN&SE&!SETN&SI	0.5264
CLK&!D&RN&!SE&!SETN&!SI	0.4902
CLK&!D&RN&!SE&!SETN&SI	0.4902
CLK&!D&RN&SE&!SETN&!SI	0.4910
CLK&!D&RN&SE&!SETN&SI	0.4911
CLK&D&RN&!SE&!SETN&!SI	0.4902
CLK&D&RN&!SE&!SETN&SI	0.4902
CLK&D&RN&SE&!SETN&!SI	0.4910
CLK&D&RN&SE&!SETN&SI	0.4911
CLK&!D&RN&SE&SETN&SI	0.8405
CLK&D&RN&!SE&SETN&!SI	0.8044
CLK&D&RN&!SE&SETN&SI	0.8044
CLK&D&RN&SE&SETN&SI	0.8242

gf180mcu_fd_sc_mcu9t5v0__sdffrsnq_4

gf180mcu_fd_sc_mcu9t5v0__sdffrsnq_4 symbol

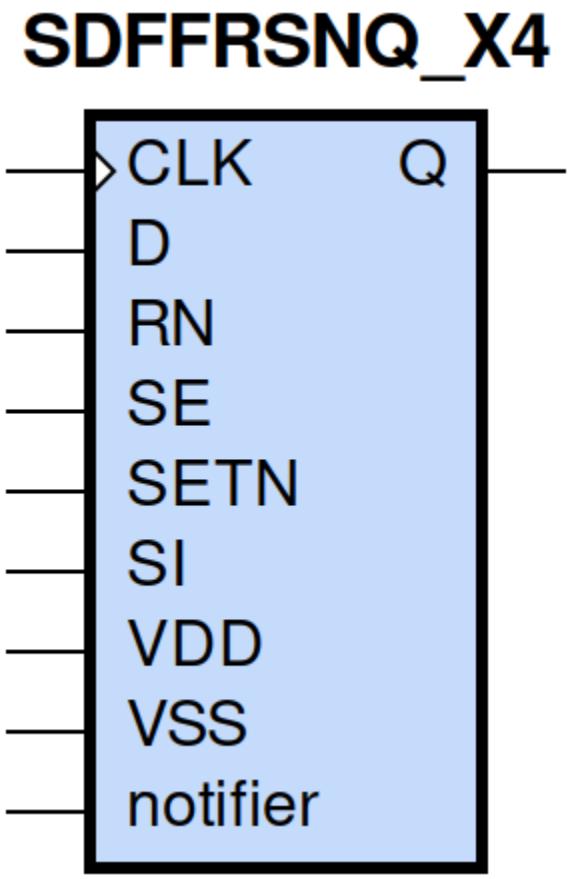

gf180mcu_fd_sc_mcu9t5v0__sdffrsnq_4 schematic

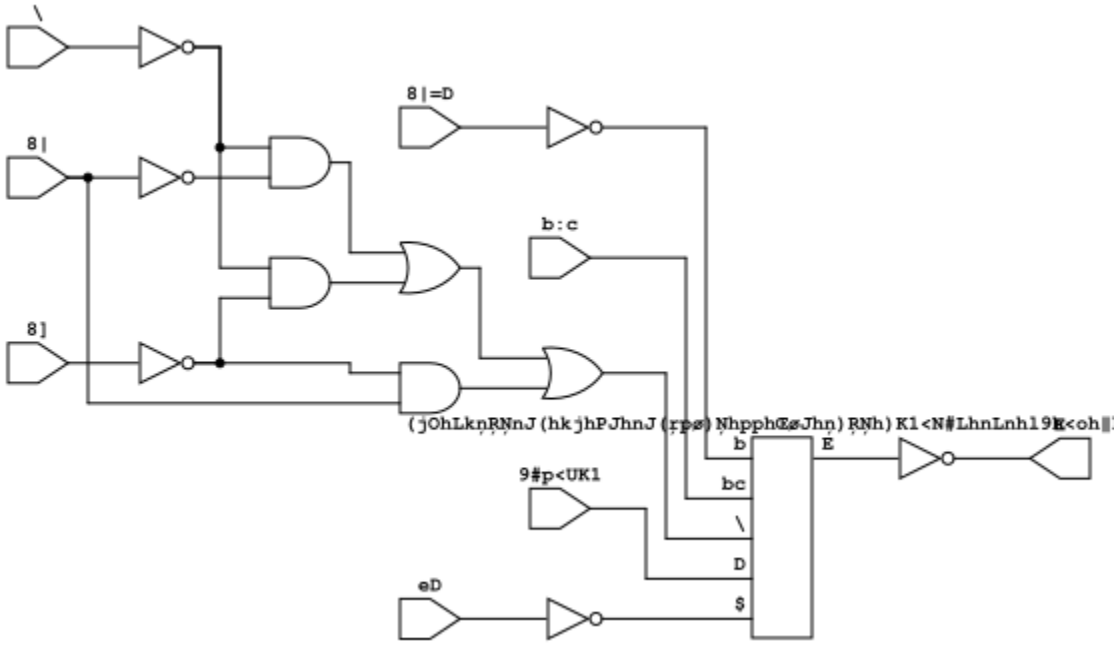

gf180mcu_fd_sc_mcu9t5v0__sdffrsnq_4 layout

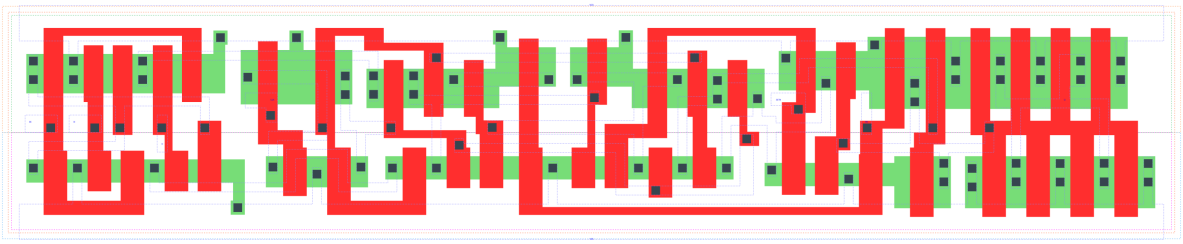

SDFFRSNQ_X4 is a positive edge triggered scan D-type flip flop with active low reset and 4X drive strength

Attributes

Attribute	Value
area	146.764800 μm^2

TRUTH TABLE

Input						Output
RN	SETN	SE	SI	D	CLK	Q
H	H	L	X	L	↑	L
H	H	L	X	H	↑	H
H	H	H	L	X	↑	L
H	H	H	H	X	↑	H
H	L	X	X	X	X	H
L	H	X	X	X	X	L
L	L	X	X	X	X	L

FUNCTIONAL SCHEMATIC

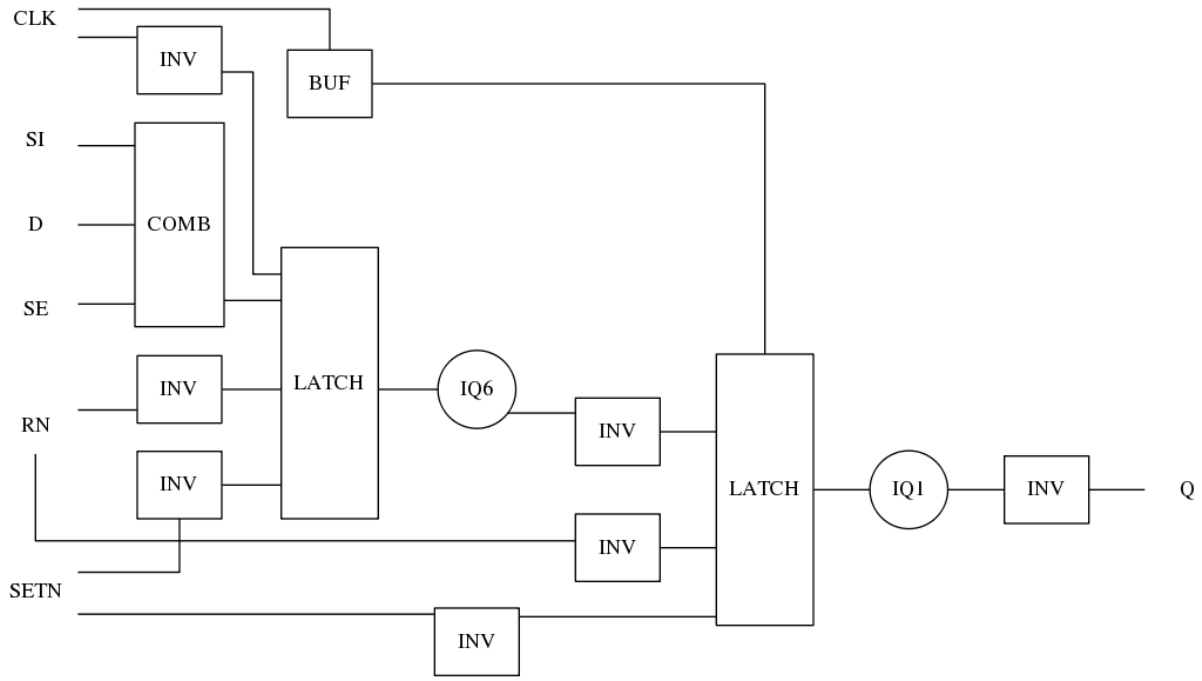

CONSTRAINTS

Constraint Pin	Related Pin	setup(ns)	hold(ns)
SE(LH)	CLK(LH)	0.4870	-0.1950
SE(LH)	CLK(LH)	0.6930	-0.0970
SE(HL)	CLK(LH)	0.5780	-0.0630
SE(HL)	CLK(LH)	0.5610	-0.2920
SI(HL)	CLK(LH)	0.6580	-0.0970
SI(HL)	CLK(LH)	0.6640	-0.0690
SI(LH)	CLK(LH)	0.5380	-0.2400
SI(LH)	CLK(LH)	0.5210	-0.2350
D(HL)	CLK(LH)	0.5670	-0.0460
D(HL)	CLK(LH)	0.5670	-0.0460
D(LH)	CLK(LH)	0.4580	-0.1890
D(LH)	CLK(LH)	0.4580	-0.1890
SETN(LH)	RN(LH)	-0.0970	0.1890
SETN(LH)	RN(LH)	-0.0970	0.1890
SETN(LH)	RN(LH)	-0.0970	0.1890
SETN(LH)	RN(LH)	-0.0970	0.1890
SETN(LH)	RN(LH)	-0.0400	0.1370
SETN(LH)	RN(LH)	-0.0400	0.1370
SETN(LH)	RN(LH)	-0.0400	0.1370
SETN(LH)	RN(LH)	-0.0400	0.1370
SETN(LH)	RN(LH)	-0.0970	0.1890
SETN(LH)	RN(LH)	-0.0970	0.1890
SETN(LH)	RN(LH)	-0.0970	0.1890
SETN(LH)	RN(LH)	-0.0400	0.1370

continues on next page

Table 293 – continued from previous page

SETN(LH)	RN(LH)	-0.0400	0.1370
SETN(LH)	RN(LH)	-0.0400	0.1370
SETN(LH)	RN(LH)	-0.0400	0.1370
SETN(LH)	RN(LH)	-0.0970	0.1890
RN(LH)	SETN(LH)	0.1890	-0.0970
RN(LH)	SETN(LH)	0.1890	-0.0970
RN(LH)	SETN(LH)	0.1890	-0.0970
RN(LH)	SETN(LH)	0.1890	-0.0970
RN(LH)	SETN(LH)	0.1370	-0.0400
RN(LH)	SETN(LH)	0.1370	-0.0400
RN(LH)	SETN(LH)	0.1370	-0.0400
RN(LH)	SETN(LH)	0.1370	-0.0400
RN(LH)	SETN(LH)	0.1890	-0.0970
RN(LH)	SETN(LH)	0.1890	-0.0970
RN(LH)	SETN(LH)	0.1890	-0.0970
RN(LH)	SETN(LH)	0.1370	-0.0400
RN(LH)	SETN(LH)	0.1370	-0.0400
RN(LH)	SETN(LH)	0.1370	-0.0400
RN(LH)	SETN(LH)	0.1370	-0.0400
RN(LH)	SETN(LH)	0.1890	-0.0970

Constraint Pin	Related Pin	recovery(ns)	removal(ns)
SETN(LH)	CLK(LH)	0.0230	0.2120
SETN(LH)	CLK(LH)	0.0230	0.2120
SETN(LH)	CLK(LH)	0.0230	0.2120
SETN(LH)	CLK(LH)	0.0230	0.2120
RN(LH)	CLK(LH)	-0.1950	0.3440
RN(LH)	CLK(LH)	-0.1950	0.3440
RN(LH)	CLK(LH)	-0.1950	0.3430
RN(LH)	CLK(LH)	-0.1950	0.3440

Constraint Pin	Related Pin	Minimum Pulse Width(ns)
CLK(HLH)	CLK(HL)	0.6870
CLK(HLH)	CLK(HL)	0.7110
CLK(HLH)	CLK(HL)	0.6810
CLK(HLH)	CLK(HL)	0.6010
CLK(HLH)	CLK(HL)	0.5280
CLK(HLH)	CLK(HL)	0.7720
CLK(HLH)	CLK(HL)	0.5280
CLK(HLH)	CLK(HL)	0.5650
CLK(LHL)	CLK(LH)	0.4660

continues on next page

Table 294 – continued from previous page

CLK(LHL)	CLK(LH)	0.4660
CLK(LHL)	CLK(LH)	0.4660
CLK(LHL)	CLK(LH)	0.5240
CLK(LHL)	CLK(LH)	0.5240
CLK(LHL)	CLK(LH)	0.4660
CLK(LHL)	CLK(LH)	0.5240
CLK(LHL)	CLK(LH)	0.5240
SETN(HLH)	SETN(HL)	0.4850
SETN(HLH)	SETN(HL)	0.4850
SETN(HLH)	SETN(HL)	0.4850
SETN(HLH)	SETN(HL)	0.4850
SETN(HLH)	SETN(HL)	0.4370
SETN(HLH)	SETN(HL)	0.4370
SETN(HLH)	SETN(HL)	0.4370
SETN(HLH)	SETN(HL)	0.4370
SETN(HLH)	SETN(HL)	0.4850
SETN(HLH)	SETN(HL)	0.4850
SETN(HLH)	SETN(HL)	0.4850
SETN(HLH)	SETN(HL)	0.4370
SETN(HLH)	SETN(HL)	0.4370
SETN(HLH)	SETN(HL)	0.4370
SETN(HLH)	SETN(HL)	0.4370
SETN(HLH)	SETN(HL)	0.4850
RN(HLH)	RN(HL)	0.3490
RN(HLH)	RN(HL)	0.3490
RN(HLH)	RN(HL)	0.3490
RN(HLH)	RN(HL)	0.3490
RN(HLH)	RN(HL)	0.3980
RN(HLH)	RN(HL)	0.3980
RN(HLH)	RN(HL)	0.3980
RN(HLH)	RN(HL)	0.3980
RN(HLH)	RN(HL)	0.3490
RN(HLH)	RN(HL)	0.3490
RN(HLH)	RN(HL)	0.3490
RN(HLH)	RN(HL)	0.3980
RN(HLH)	RN(HL)	0.3980
RN(HLH)	RN(HL)	0.3980
RN(HLH)	RN(HL)	0.3980
RN(HLH)	RN(HL)	0.3490

PIN CAPACITANCE (pf)

Pin	Type	Capacitance (pf)
SE	input	0.0085
SI	input	0.0039
D	input	0.0038
CLK	input	0.0051
SETN	input	0.0087
RN	input	0.0102

DELAY AND OUTPUT TRANSITION TIME corresponding to min slew and load

Input Pin	Output	When Condition	Tin (ns)	Out Load (pf)	Delay (ns)	Tout (ns)
CLK(LH)	Q(HL)	!D&RN&!SE&SETN&!SI	0.0100	0.0010	0.6867	0.0432
CLK(LH)	Q(HL)	!D&RN&!SE&SETN&SI	0.0100	0.0010	0.6867	0.0431
CLK(LH)	Q(HL)	!D&RN&SE&SETN&!SI	0.0100	0.0010	0.6868	0.0432
CLK(LH)	Q(HL)	D&RN&SE&SETN&!SI	0.0100	0.0010	0.6866	0.0432
CLK(LH)	Q(LH)	!D&RN&SE&SETN&SI	0.0100	0.0010	0.7915	0.0569
CLK(LH)	Q(LH)	D&RN&!SE&SETN&!SI	0.0100	0.0010	0.7913	0.0572
CLK(LH)	Q(LH)	D&RN&!SE&SETN&SI	0.0100	0.0010	0.7915	0.0569
CLK(LH)	Q(LH)	D&RN&SE&SETN&SI	0.0100	0.0010	0.7915	0.0569
SETN(HL)	Q(LH)	!CLK&!D&RN&!SE&!SI	0.0100	0.0010	0.6987	0.0568
SETN(HL)	Q(LH)	!CLK&D&RN&SE&!SI	0.0100	0.0010	0.6987	0.0568
SETN(HL)	Q(LH)	!CLK&D&RN&!SE&SI	0.0100	0.0010	0.6990	0.0568
SETN(HL)	Q(LH)	!CLK&D&RN&SE&SI	0.0100	0.0010	0.6990	0.0568
SETN(HL)	Q(LH)	CLK&D&RN&!SE&!SI	0.0100	0.0010	0.7429	0.0567
SETN(HL)	Q(LH)	CLK&D&RN&SE&!SI	0.0100	0.0010	0.7430	0.0567
SETN(HL)	Q(LH)	CLK&D&RN&!SE&SI	0.0100	0.0010	0.7429	0.0567
SETN(HL)	Q(LH)	CLK&D&RN&SE&SI	0.0100	0.0010	0.7429	0.0567
SETN(HL)	Q(LH)	!CLK&!D&RN&SE&!SI	0.0100	0.0010	0.6987	0.0568
SETN(HL)	Q(LH)	!CLK&!D&RN&!SE&SI	0.0100	0.0010	0.6987	0.0568
SETN(HL)	Q(LH)	!CLK&!D&RN&SE&SI	0.0100	0.0010	0.6990	0.0568
SETN(HL)	Q(LH)	CLK&!D&RN&!SE&!SI	0.0100	0.0010	0.7430	0.0567
SETN(HL)	Q(LH)	CLK&!D&RN&SE&!SI	0.0100	0.0010	0.7430	0.0567
SETN(HL)	Q(LH)	CLK&!D&RN&!SE&SI	0.0100	0.0010	0.7430	0.0567
SETN(HL)	Q(LH)	CLK&!D&RN&SE&SI	0.0100	0.0010	0.7429	0.0567
SETN(HL)	Q(LH)	!CLK&D&RN&!SE&!SI	0.0100	0.0010	0.6990	0.0568
RN(HL)	Q(HL)	!CLK&!D&!SE&SETN&!SI	0.0100	0.0010	0.2397	0.0415
RN(HL)	Q(HL)	!CLK&D&SE&SETN&!SI	0.0100	0.0010	0.2397	0.0415
RN(HL)	Q(HL)	!CLK&D&!SE&SETN&SI	0.0100	0.0010	0.2397	0.0417
RN(HL)	Q(HL)	!CLK&D&SE&SETN&SI	0.0100	0.0010	0.2397	0.0417
RN(HL)	Q(HL)	CLK&D&!SE&SETN&!SI	0.0100	0.0010	0.2396	0.0413
RN(HL)	Q(HL)	CLK&D&SE&SETN&!SI	0.0100	0.0010	0.2395	0.0414
RN(HL)	Q(HL)	CLK&D&!SE&SETN&SI	0.0100	0.0010	0.2396	0.0413
RN(HL)	Q(HL)	CLK&D&SE&SETN&SI	0.0100	0.0010	0.2396	0.0413
RN(HL)	Q(HL)	!CLK&!D&!SE&!SETN&!SI	0.0100	0.0010	0.2395	0.0410
RN(HL)	Q(HL)	!CLK&!D&!SE&!SETN&SI	0.0100	0.0010	0.2395	0.0410
RN(HL)	Q(HL)	!CLK&!D&SE&!SETN&!SI	0.0100	0.0010	0.2395	0.0410
RN(HL)	Q(HL)	!CLK&!D&SE&!SETN&SI	0.0100	0.0010	0.2395	0.0410

continues on next page

Table 295 – continued from previous page

RN(HL)	Q(HL)	!CLK&D&!SE&!SETN&!SI	0.0100	0.0010	0.2395	0.0410
RN(HL)	Q(HL)	!CLK&D&!SE&!SETN&SI	0.0100	0.0010	0.2395	0.0410
RN(HL)	Q(HL)	!CLK&D&SE&!SETN&!SI	0.0100	0.0010	0.2395	0.0410
RN(HL)	Q(HL)	!CLK&D&SE&!SETN&SI	0.0100	0.0010	0.2395	0.0410
RN(HL)	Q(HL)	CLK&!D&!SE&!SETN&!SI	0.0100	0.0010	0.2396	0.0409
RN(HL)	Q(HL)	CLK&!D&!SE&!SETN&SI	0.0100	0.0010	0.2396	0.0409
RN(HL)	Q(HL)	CLK&!D&SE&!SETN&!SI	0.0100	0.0010	0.2396	0.0409
RN(HL)	Q(HL)	CLK&!D&SE&!SETN&SI	0.0100	0.0010	0.2396	0.0409
RN(HL)	Q(HL)	CLK&D&!SE&!SETN&!SI	0.0100	0.0010	0.2396	0.0409
RN(HL)	Q(HL)	CLK&D&!SE&!SETN&SI	0.0100	0.0010	0.2396	0.0409
RN(HL)	Q(HL)	CLK&D&SE&!SETN&!SI	0.0100	0.0010	0.2396	0.0409
RN(HL)	Q(HL)	CLK&D&SE&!SETN&SI	0.0100	0.0010	0.2396	0.0409
RN(HL)	Q(HL)	!CLK&!D&SE&SETN&!SI	0.0100	0.0010	0.2397	0.0415
RN(HL)	Q(HL)	!CLK&!D&!SE&SETN&SI	0.0100	0.0010	0.2397	0.0415
RN(HL)	Q(HL)	!CLK&!D&SE&SETN&SI	0.0100	0.0010	0.2397	0.0417
RN(HL)	Q(HL)	CLK&!D&!SE&SETN&!SI	0.0100	0.0010	0.2395	0.0414
RN(HL)	Q(HL)	CLK&!D&SE&SETN&!SI	0.0100	0.0010	0.2395	0.0414
RN(HL)	Q(HL)	CLK&!D&!SE&SETN&SI	0.0100	0.0010	0.2395	0.0414
RN(HL)	Q(HL)	CLK&!D&SE&SETN&SI	0.0100	0.0010	0.2396	0.0413
RN(HL)	Q(HL)	!CLK&D&!SE&SETN&!SI	0.0100	0.0010	0.2397	0.0417
RN(LH)	Q(LH)	!CLK&!D&!SE&!SETN&!SI	0.0100	0.0010	0.4317	0.0559
RN(LH)	Q(LH)	!CLK&!D&!SE&!SETN&SI	0.0100	0.0010	0.4316	0.0558
RN(LH)	Q(LH)	!CLK&!D&SE&!SETN&!SI	0.0100	0.0010	0.4317	0.0558
RN(LH)	Q(LH)	!CLK&!D&SE&!SETN&SI	0.0100	0.0010	0.4316	0.0558
RN(LH)	Q(LH)	!CLK&D&!SE&!SETN&!SI	0.0100	0.0010	0.4316	0.0558
RN(LH)	Q(LH)	!CLK&D&!SE&!SETN&SI	0.0100	0.0010	0.4316	0.0558
RN(LH)	Q(LH)	!CLK&D&SE&!SETN&!SI	0.0100	0.0010	0.4317	0.0558
RN(LH)	Q(LH)	!CLK&D&SE&!SETN&SI	0.0100	0.0010	0.4316	0.0558
RN(LH)	Q(LH)	CLK&!D&!SE&!SETN&!SI	0.0100	0.0010	0.4339	0.0562
RN(LH)	Q(LH)	CLK&!D&!SE&!SETN&SI	0.0100	0.0010	0.4338	0.0564
RN(LH)	Q(LH)	CLK&!D&SE&!SETN&!SI	0.0100	0.0010	0.4338	0.0564
RN(LH)	Q(LH)	CLK&!D&SE&!SETN&SI	0.0100	0.0010	0.4338	0.0563
RN(LH)	Q(LH)	CLK&D&!SE&!SETN&!SI	0.0100	0.0010	0.4338	0.0564
RN(LH)	Q(LH)	CLK&D&!SE&!SETN&SI	0.0100	0.0010	0.4338	0.0564
RN(LH)	Q(LH)	CLK&D&SE&!SETN&!SI	0.0100	0.0010	0.4338	0.0564
RN(LH)	Q(LH)	CLK&D&SE&!SETN&SI	0.0100	0.0010	0.4338	0.0563

DYNAMIC ENERGY

Input Pin	When Condition	Tin (ns)	Output	Out Load (pf)	Energy (uW/MHz)
CLK	!D&RN&!SE&SETN&!SI	0.0100	Q(HL)	0.0010	1.6173
CLK	!D&RN&!SE&SETN&SI	0.0100	Q(HL)	0.0010	1.6175
CLK	!D&RN&SE&SETN&!SI	0.0100	Q(HL)	0.0010	1.6175
CLK	D&RN&SE&SETN&!SI	0.0100	Q(HL)	0.0010	1.6176
CLK	!D&RN&SE&SETN&SI	0.0100	Q(LH)	0.0010	1.8752
CLK	D&RN&!SE&SETN&!SI	0.0100	Q(LH)	0.0010	1.8748
CLK	D&RN&!SE&SETN&SI	0.0100	Q(LH)	0.0010	1.8751

continues on next page

Table 296 – continued from previous page

CLK	D&RN&SE&SETN&SI	0.0100	Q(LH)	0.0010	1.8753
SETN	!CLK&!D&RN&!SE&!SI	0.0100	Q(LH)	0.0010	1.6722
SETN	!CLK&D&RN&SE&!SI	0.0100	Q(LH)	0.0010	1.6722
SETN	!CLK&D&RN&!SE&SI	0.0100	Q(LH)	0.0010	1.5383
SETN	!CLK&D&RN&SE&SI	0.0100	Q(LH)	0.0010	1.5383
SETN	CLK&D&RN&!SE&!SI	0.0100	Q(LH)	0.0010	1.8116
SETN	CLK&D&RN&SE&!SI	0.0100	Q(LH)	0.0010	1.8114
SETN	CLK&D&RN&!SE&SI	0.0100	Q(LH)	0.0010	1.8117
SETN	CLK&D&RN&SE&SI	0.0100	Q(LH)	0.0010	1.8117
SETN	!CLK&!D&RN&SE&!SI	0.0100	Q(LH)	0.0010	1.6722
SETN	!CLK&!D&RN&!SE&SI	0.0100	Q(LH)	0.0010	1.6722
SETN	!CLK&!D&RN&SE&SI	0.0100	Q(LH)	0.0010	1.5383
SETN	CLK&!D&RN&!SE&!SI	0.0100	Q(LH)	0.0010	1.8114
SETN	CLK&!D&RN&SE&!SI	0.0100	Q(LH)	0.0010	1.8114
SETN	CLK&!D&RN&!SE&SI	0.0100	Q(LH)	0.0010	1.8114
SETN	CLK&!D&RN&SE&SI	0.0100	Q(LH)	0.0010	1.8117
SETN	!CLK&D&RN&!SE&!SI	0.0100	Q(LH)	0.0010	1.5383
RN	!CLK&!D&!SE&SETN&!SI	0.0100	Q(HL)	0.0010	1.3339
RN	!CLK&D&SE&SETN&!SI	0.0100	Q(HL)	0.0010	1.3339
RN	!CLK&D&!SE&SETN&SI	0.0100	Q(HL)	0.0010	1.3344
RN	!CLK&D&SE&SETN&SI	0.0100	Q(HL)	0.0010	1.3344
RN	CLK&D&!SE&SETN&!SI	0.0100	Q(HL)	0.0010	1.6379
RN	CLK&D&SE&SETN&!SI	0.0100	Q(HL)	0.0010	1.6387
RN	CLK&D&!SE&SETN&SI	0.0100	Q(HL)	0.0010	1.6379
RN	CLK&D&SE&SETN&SI	0.0100	Q(HL)	0.0010	1.6378
RN	!CLK&!D&!SE&!SETN&!SI	0.0100	Q(HL)	0.0010	1.1068
RN	!CLK&!D&!SE&!SETN&SI	0.0100	Q(HL)	0.0010	1.1068
RN	!CLK&!D&SE&!SETN&!SI	0.0100	Q(HL)	0.0010	1.1068
RN	!CLK&!D&SE&!SETN&SI	0.0100	Q(HL)	0.0010	1.1045
RN	!CLK&D&!SE&!SETN&!SI	0.0100	Q(HL)	0.0010	1.1045
RN	!CLK&D&!SE&!SETN&SI	0.0100	Q(HL)	0.0010	1.1045
RN	!CLK&D&SE&!SETN&!SI	0.0100	Q(HL)	0.0010	1.1068
RN	!CLK&D&SE&!SETN&SI	0.0100	Q(HL)	0.0010	1.1045
RN	CLK&!D&!SE&!SETN&!SI	0.0100	Q(HL)	0.0010	1.2845
RN	CLK&!D&!SE&!SETN&SI	0.0100	Q(HL)	0.0010	1.2845
RN	CLK&!D&SE&!SETN&!SI	0.0100	Q(HL)	0.0010	1.2845
RN	CLK&!D&SE&!SETN&SI	0.0100	Q(HL)	0.0010	1.2845
RN	CLK&D&!SE&!SETN&!SI	0.0100	Q(HL)	0.0010	1.2845
RN	CLK&D&!SE&!SETN&SI	0.0100	Q(HL)	0.0010	1.2845
RN	CLK&D&SE&!SETN&!SI	0.0100	Q(HL)	0.0010	1.2845
RN	CLK&D&SE&!SETN&SI	0.0100	Q(HL)	0.0010	1.2845
RN	!CLK&!D&SE&SETN&!SI	0.0100	Q(HL)	0.0010	1.3339
RN	!CLK&!D&!SE&SETN&SI	0.0100	Q(HL)	0.0010	1.3339
RN	!CLK&!D&SE&SETN&SI	0.0100	Q(HL)	0.0010	1.3344
RN	CLK&!D&!SE&SETN&!SI	0.0100	Q(HL)	0.0010	1.6387
RN	CLK&!D&SE&SETN&!SI	0.0100	Q(HL)	0.0010	1.6387
RN	CLK&!D&!SE&SETN&SI	0.0100	Q(HL)	0.0010	1.6387
RN	CLK&!D&SE&SETN&SI	0.0100	Q(HL)	0.0010	1.6379
RN	!CLK&D&!SE&SETN&!SI	0.0100	Q(HL)	0.0010	1.3344
RN	!CLK&!D&!SE&!SETN&!SI	0.0100	Q(LH)	0.0010	1.0974
RN	!CLK&!D&!SE&!SETN&SI	0.0100	Q(LH)	0.0010	1.0973
RN	!CLK&!D&SE&!SETN&!SI	0.0100	Q(LH)	0.0010	1.0974

continues on next page

Table 296 – continued from previous page

RN	!CLK&!D&SE&!SETN&SI	0.0100	Q(LH)	0.0010	1.0997
RN	!CLK&D&!SE&!SETN&!SI	0.0100	Q(LH)	0.0010	1.0997
RN	!CLK&D&!SE&!SETN&SI	0.0100	Q(LH)	0.0010	1.0997
RN	!CLK&D&SE&!SETN&!SI	0.0100	Q(LH)	0.0010	1.0974
RN	!CLK&D&SE&!SETN&SI	0.0100	Q(LH)	0.0010	1.0997
RN	CLK&!D&!SE&!SETN&!SI	0.0100	Q(LH)	0.0010	1.2390
RN	CLK&!D&!SE&!SETN&SI	0.0100	Q(LH)	0.0010	1.2389
RN	CLK&!D&SE&!SETN&!SI	0.0100	Q(LH)	0.0010	1.2389
RN	CLK&!D&SE&!SETN&SI	0.0100	Q(LH)	0.0010	1.2388
RN	CLK&D&!SE&!SETN&!SI	0.0100	Q(LH)	0.0010	1.2389
RN	CLK&D&!SE&!SETN&SI	0.0100	Q(LH)	0.0010	1.2389
RN	CLK&D&SE&!SETN&!SI	0.0100	Q(LH)	0.0010	1.2389
RN	CLK&D&SE&!SETN&SI	0.0100	Q(LH)	0.0010	1.2388
SETN(HL)	!CLK&!D&!RN&!SE&!SI	0.0100	n/a	n/a	0.4383
SETN(HL)	!CLK&!D&!RN&!SE&SI	0.0100	n/a	n/a	0.4383
SETN(HL)	!CLK&!D&!RN&SE&!SI	0.0100	n/a	n/a	0.4383
SETN(HL)	!CLK&!D&!RN&SE&SI	0.0100	n/a	n/a	0.3144
SETN(HL)	!CLK&D&!RN&!SE&!SI	0.0100	n/a	n/a	0.3145
SETN(HL)	!CLK&D&!RN&!SE&SI	0.0100	n/a	n/a	0.3145
SETN(HL)	!CLK&D&!RN&SE&!SI	0.0100	n/a	n/a	0.4383
SETN(HL)	!CLK&D&!RN&SE&SI	0.0100	n/a	n/a	0.3144
SETN(HL)	CLK&!D&!RN&!SE&!SI	0.0100	n/a	n/a	0.4392
SETN(HL)	CLK&!D&!RN&!SE&SI	0.0100	n/a	n/a	0.4392
SETN(HL)	CLK&!D&!RN&SE&!SI	0.0100	n/a	n/a	0.4392
SETN(HL)	CLK&!D&!RN&SE&SI	0.0100	n/a	n/a	0.4392
SETN(HL)	CLK&D&!RN&!SE&!SI	0.0100	n/a	n/a	0.4392
SETN(HL)	CLK&D&!RN&!SE&SI	0.0100	n/a	n/a	0.4392
SETN(HL)	CLK&D&!RN&SE&!SI	0.0100	n/a	n/a	0.4392
SETN(HL)	CLK&D&!RN&SE&SI	0.0100	n/a	n/a	0.4392
SETN(HL)	CLK&!D&RN&!SE&!SI	0.0100	n/a	n/a	0.0708
SETN(HL)	CLK&!D&RN&SE&!SI	0.0100	n/a	n/a	0.0708
SETN(HL)	CLK&!D&RN&!SE&SI	0.0100	n/a	n/a	0.0708
SETN(HL)	CLK&!D&RN&SE&SI	0.0100	n/a	n/a	0.0708
SETN(HL)	!CLK&D&RN&!SE&!SI	0.0100	n/a	n/a	0.0708
SETN(HL)	!CLK&D&RN&SE&!SI	0.0100	n/a	n/a	0.2046
SETN(HL)	!CLK&D&RN&!SE&SI	0.0100	n/a	n/a	0.0708
SETN(HL)	!CLK&D&RN&SE&SI	0.0100	n/a	n/a	0.0708
SETN(HL)	CLK&D&RN&!SE&!SI	0.0100	n/a	n/a	0.0708
SETN(HL)	CLK&D&RN&SE&!SI	0.0100	n/a	n/a	0.0708
SETN(HL)	!CLK&!D&RN&!SE&!SI	0.0100	n/a	n/a	0.2046
SETN(HL)	CLK&D&RN&!SE&SI	0.0100	n/a	n/a	0.0708
SETN(HL)	CLK&D&RN&SE&SI	0.0100	n/a	n/a	0.0708
SETN(HL)	!CLK&!D&RN&SE&!SI	0.0100	n/a	n/a	0.2046
SETN(HL)	!CLK&!D&RN&!SE&SI	0.0100	n/a	n/a	0.2046
SETN(HL)	!CLK&!D&RN&SE&SI	0.0100	n/a	n/a	0.0708
D(HL)	!CLK&!RN&!SE&!SETN&!SI	0.0100	n/a	n/a	0.2774
D(HL)	!CLK&!RN&!SE&!SETN&SI	0.0100	n/a	n/a	0.2774
D(HL)	!CLK&!RN&!SE&SETN&!SI	0.0100	n/a	n/a	0.4301
D(HL)	!CLK&!RN&!SE&SETN&SI	0.0100	n/a	n/a	0.4301
D(HL)	!CLK&!RN&SE&!SETN&!SI	0.0100	n/a	n/a	0.0328
D(HL)	!CLK&!RN&SE&!SETN&SI	0.0100	n/a	n/a	0.0154
D(HL)	!CLK&!RN&SE&SETN&!SI	0.0100	n/a	n/a	0.0328

continues on next page

Table 296 – continued from previous page

D(HL)	!CLK&!RN&SE&SETN&SI	0.0100	n/a	n/a	0.0154
D(HL)	CLK&!RN&!SE&!SETN&!SI	0.0100	n/a	n/a	0.0367
D(HL)	CLK&!RN&!SE&!SETN&SI	0.0100	n/a	n/a	0.0367
D(HL)	CLK&!RN&!SE&SETN&!SI	0.0100	n/a	n/a	0.0367
D(HL)	CLK&!RN&!SE&SETN&SI	0.0100	n/a	n/a	0.0367
D(HL)	CLK&!RN&SE&!SETN&!SI	0.0100	n/a	n/a	0.0391
D(HL)	CLK&!RN&SE&!SETN&SI	0.0100	n/a	n/a	0.0159
D(HL)	CLK&!RN&SE&SETN&!SI	0.0100	n/a	n/a	0.0391
D(HL)	CLK&!RN&SE&SETN&SI	0.0100	n/a	n/a	0.0158
D(HL)	!CLK&RN&!SE&SETN&!SI	0.0100	n/a	n/a	0.4152
D(HL)	!CLK&RN&SE&SETN&!SI	0.0100	n/a	n/a	0.0328
D(HL)	!CLK&RN&!SE&SETN&SI	0.0100	n/a	n/a	0.4152
D(HL)	!CLK&RN&SE&SETN&SI	0.0100	n/a	n/a	0.0155
D(HL)	CLK&RN&!SE&SETN&!SI	0.0100	n/a	n/a	0.0697
D(HL)	CLK&RN&SE&SETN&!SI	0.0100	n/a	n/a	0.0321
D(HL)	!CLK&RN&!SE&!SETN&!SI	0.0100	n/a	n/a	0.2774
D(HL)	!CLK&RN&!SE&!SETN&SI	0.0100	n/a	n/a	0.2774
D(HL)	!CLK&RN&SE&!SETN&!SI	0.0100	n/a	n/a	0.0328
D(HL)	!CLK&RN&SE&!SETN&SI	0.0100	n/a	n/a	0.0154
D(HL)	CLK&RN&!SE&!SETN&!SI	0.0100	n/a	n/a	0.0322
D(HL)	CLK&RN&!SE&!SETN&SI	0.0100	n/a	n/a	0.0322
D(HL)	CLK&RN&SE&!SETN&!SI	0.0100	n/a	n/a	0.0321
D(HL)	CLK&RN&SE&!SETN&SI	0.0100	n/a	n/a	0.0159
D(HL)	CLK&RN&!SE&SETN&SI	0.0100	n/a	n/a	0.0697
D(HL)	CLK&RN&SE&SETN&SI	0.0100	n/a	n/a	0.0140
SE(HL)	!CLK&!D&!RN&!SETN&!SI	0.0100	n/a	n/a	0.1881
SE(HL)	!CLK&!D&!RN&!SETN&SI	0.0100	n/a	n/a	0.4568
SE(HL)	!CLK&!D&!RN&SETN&!SI	0.0100	n/a	n/a	0.1881
SE(HL)	!CLK&!D&!RN&SETN&SI	0.0100	n/a	n/a	0.6093
SE(HL)	!CLK&D&!RN&!SETN&!SI	0.0100	n/a	n/a	0.3163
SE(HL)	!CLK&D&!RN&!SETN&SI	0.0100	n/a	n/a	0.1910
SE(HL)	!CLK&D&!RN&SETN&!SI	0.0100	n/a	n/a	0.4900
SE(HL)	!CLK&D&!RN&SETN&SI	0.0100	n/a	n/a	0.1912
SE(HL)	CLK&!D&!RN&!SETN&!SI	0.0100	n/a	n/a	0.1962
SE(HL)	CLK&!D&!RN&!SETN&SI	0.0100	n/a	n/a	0.1925
SE(HL)	CLK&!D&!RN&SETN&!SI	0.0100	n/a	n/a	0.1962
SE(HL)	CLK&!D&!RN&SETN&SI	0.0100	n/a	n/a	0.1925
SE(HL)	CLK&D&!RN&!SETN&!SI	0.0100	n/a	n/a	0.1926
SE(HL)	CLK&D&!RN&!SETN&SI	0.0100	n/a	n/a	0.1938
SE(HL)	CLK&D&!RN&SETN&!SI	0.0100	n/a	n/a	0.1927
SE(HL)	CLK&D&!RN&SETN&SI	0.0100	n/a	n/a	0.1938
SE(HL)	CLK&!D&RN&SETN&!SI	0.0100	n/a	n/a	0.1874
SE(HL)	CLK&!D&RN&SETN&SI	0.0100	n/a	n/a	0.2497
SE(HL)	!CLK&!D&RN&!SETN&!SI	0.0100	n/a	n/a	0.1881
SE(HL)	!CLK&!D&RN&!SETN&SI	0.0100	n/a	n/a	0.4568
SE(HL)	!CLK&D&RN&!SETN&!SI	0.0100	n/a	n/a	0.3163
SE(HL)	!CLK&D&RN&!SETN&SI	0.0100	n/a	n/a	0.1910
SE(HL)	CLK&!D&RN&!SETN&!SI	0.0100	n/a	n/a	0.1875
SE(HL)	CLK&!D&RN&!SETN&SI	0.0100	n/a	n/a	0.1881
SE(HL)	CLK&D&RN&!SETN&!SI	0.0100	n/a	n/a	0.1925
SE(HL)	CLK&D&RN&!SETN&SI	0.0100	n/a	n/a	0.1998
SE(HL)	!CLK&D&RN&SETN&!SI	0.0100	n/a	n/a	0.4998

continues on next page

Table 296 – continued from previous page

SE(HL)	!CLK&D&RN&SETN&SI	0.0100	n/a	n/a	0.1910
SE(HL)	CLK&D&RN&SETN&!SI	0.0100	n/a	n/a	0.1946
SE(HL)	CLK&D&RN&SETN&SI	0.0100	n/a	n/a	0.1907
SE(HL)	!CLK&!D&RN&SETN&!SI	0.0100	n/a	n/a	0.1881
SE(HL)	!CLK&!D&RN&SETN&SI	0.0100	n/a	n/a	0.5944
SE(LH)	!CLK&!D&!RN&!SETN&!SI	0.0100	n/a	n/a	0.0028
SE(LH)	!CLK&!D&!RN&!SETN&SI	0.0100	n/a	n/a	0.1229
SE(LH)	!CLK&!D&!RN&SETN&!SI	0.0100	n/a	n/a	0.0028
SE(LH)	!CLK&!D&!RN&SETN&SI	0.0100	n/a	n/a	0.3033
SE(LH)	!CLK&D&!RN&!SETN&!SI	0.0100	n/a	n/a	0.2895
SE(LH)	!CLK&D&!RN&!SETN&SI	0.0100	n/a	n/a	-0.0118
SE(LH)	!CLK&D&!RN&SETN&!SI	0.0100	n/a	n/a	0.4582
SE(LH)	!CLK&D&!RN&SETN&SI	0.0100	n/a	n/a	-0.0118
SE(LH)	CLK&!D&!RN&!SETN&!SI	0.0100	n/a	n/a	-0.0000
SE(LH)	CLK&!D&!RN&!SETN&SI	0.0100	n/a	n/a	-0.0093
SE(LH)	CLK&!D&!RN&SETN&!SI	0.0100	n/a	n/a	-0.0000
SE(LH)	CLK&!D&!RN&SETN&SI	0.0100	n/a	n/a	-0.0093
SE(LH)	CLK&D&!RN&!SETN&!SI	0.0100	n/a	n/a	0.0008
SE(LH)	CLK&D&!RN&!SETN&SI	0.0100	n/a	n/a	-0.0138
SE(LH)	CLK&D&!RN&SETN&!SI	0.0100	n/a	n/a	0.0008
SE(LH)	CLK&D&!RN&SETN&SI	0.0100	n/a	n/a	-0.0138
SE(LH)	CLK&!D&RN&SETN&!SI	0.0100	n/a	n/a	-0.0000
SE(LH)	CLK&!D&RN&SETN&SI	0.0100	n/a	n/a	-0.0092
SE(LH)	!CLK&!D&RN&!SETN&!SI	0.0100	n/a	n/a	0.0028
SE(LH)	!CLK&!D&RN&!SETN&SI	0.0100	n/a	n/a	0.1229
SE(LH)	!CLK&D&RN&!SETN&!SI	0.0100	n/a	n/a	0.2895
SE(LH)	!CLK&D&RN&!SETN&SI	0.0100	n/a	n/a	-0.0118
SE(LH)	CLK&!D&RN&!SETN&!SI	0.0100	n/a	n/a	-0.0000
SE(LH)	CLK&!D&RN&!SETN&SI	0.0100	n/a	n/a	-0.0093
SE(LH)	CLK&D&RN&!SETN&!SI	0.0100	n/a	n/a	0.0008
SE(LH)	CLK&D&RN&!SETN&SI	0.0100	n/a	n/a	-0.0138
SE(LH)	!CLK&D&RN&SETN&!SI	0.0100	n/a	n/a	0.4423
SE(LH)	!CLK&D&RN&SETN&SI	0.0100	n/a	n/a	-0.0118
SE(LH)	CLK&D&RN&SETN&!SI	0.0100	n/a	n/a	0.0411
SE(LH)	CLK&D&RN&SETN&SI	0.0100	n/a	n/a	-0.0150
SE(LH)	!CLK&!D&RN&SETN&!SI	0.0100	n/a	n/a	0.0028
SE(LH)	!CLK&!D&RN&SETN&SI	0.0100	n/a	n/a	0.3131
CLK(LH)	!D&!RN&!SE&!SETN&!SI	0.0100	n/a	n/a	0.3179
CLK(LH)	!D&!RN&!SE&!SETN&SI	0.0100	n/a	n/a	0.3179
CLK(LH)	!D&!RN&!SE&SETN&!SI	0.0100	n/a	n/a	0.3002
CLK(LH)	!D&!RN&!SE&SETN&SI	0.0100	n/a	n/a	0.3002
CLK(LH)	!D&!RN&SE&!SETN&!SI	0.0100	n/a	n/a	0.3180
CLK(LH)	!D&!RN&SE&!SETN&SI	0.0100	n/a	n/a	0.4383
CLK(LH)	!D&!RN&SE&SETN&!SI	0.0100	n/a	n/a	0.3002
CLK(LH)	!D&!RN&SE&SETN&SI	0.0100	n/a	n/a	0.6478
CLK(LH)	D&!RN&!SE&!SETN&!SI	0.0100	n/a	n/a	0.4382
CLK(LH)	D&!RN&!SE&!SETN&SI	0.0100	n/a	n/a	0.4382
CLK(LH)	D&!RN&!SE&SETN&!SI	0.0100	n/a	n/a	0.6477
CLK(LH)	D&!RN&!SE&SETN&SI	0.0100	n/a	n/a	0.6478
CLK(LH)	D&!RN&SE&!SETN&!SI	0.0100	n/a	n/a	0.3179
CLK(LH)	D&!RN&SE&!SETN&SI	0.0100	n/a	n/a	0.4384
CLK(LH)	D&!RN&SE&SETN&!SI	0.0100	n/a	n/a	0.3002

continues on next page

Table 296 – continued from previous page

CLK(LH)	D&!RN&SE&SETN&SI	0.0100	n/a	n/a	0.6479
CLK(LH)	!D&RN&!SE&SETN&!SI	0.0100	n/a	n/a	0.3002
CLK(LH)	!D&RN&SE&SETN&!SI	0.0100	n/a	n/a	0.2999
CLK(LH)	!D&RN&!SE&SETN&SI	0.0100	n/a	n/a	0.2999
CLK(LH)	!D&RN&SE&SETN&SI	0.0100	n/a	n/a	0.3224
CLK(LH)	D&RN&!SE&SETN&!SI	0.0100	n/a	n/a	0.3226
CLK(LH)	D&RN&SE&SETN&!SI	0.0100	n/a	n/a	0.3002
CLK(LH)	!D&RN&!SE&!SETN&!SI	0.0100	n/a	n/a	0.4090
CLK(LH)	!D&RN&!SE&!SETN&SI	0.0100	n/a	n/a	0.4090
CLK(LH)	!D&RN&SE&!SETN&!SI	0.0100	n/a	n/a	0.4094
CLK(LH)	!D&RN&SE&!SETN&SI	0.0100	n/a	n/a	0.3227
CLK(LH)	D&RN&!SE&!SETN&!SI	0.0100	n/a	n/a	0.3225
CLK(LH)	D&RN&!SE&!SETN&SI	0.0100	n/a	n/a	0.3226
CLK(LH)	D&RN&SE&!SETN&!SI	0.0100	n/a	n/a	0.4092
CLK(LH)	D&RN&SE&!SETN&SI	0.0100	n/a	n/a	0.3227
CLK(LH)	D&RN&!SE&SETN&SI	0.0100	n/a	n/a	0.3225
CLK(LH)	D&RN&SE&SETN&SI	0.0100	n/a	n/a	0.3227
SI(LH)	!CLK&!D&!RN&!SE&!SETN	0.0100	n/a	n/a	-0.0315
SI(LH)	!CLK&!D&!RN&!SE&SETN	0.0100	n/a	n/a	-0.0315
SI(LH)	!CLK&!D&!RN&SE&!SETN	0.0100	n/a	n/a	0.1216
SI(LH)	!CLK&!D&!RN&SE&SETN	0.0100	n/a	n/a	0.3040
SI(LH)	!CLK&D&!RN&!SE&!SETN	0.0100	n/a	n/a	-0.0291
SI(LH)	!CLK&D&!RN&!SE&SETN	0.0100	n/a	n/a	-0.0291
SI(LH)	!CLK&D&!RN&SE&!SETN	0.0100	n/a	n/a	0.1057
SI(LH)	!CLK&D&!RN&SE&SETN	0.0100	n/a	n/a	0.2847
SI(LH)	CLK&!D&!RN&!SE&!SETN	0.0100	n/a	n/a	-0.0315
SI(LH)	CLK&!D&!RN&!SE&SETN	0.0100	n/a	n/a	-0.0315
SI(LH)	CLK&!D&!RN&SE&!SETN	0.0100	n/a	n/a	-0.0255
SI(LH)	CLK&!D&!RN&SE&SETN	0.0100	n/a	n/a	-0.0256
SI(LH)	CLK&D&!RN&!SE&!SETN	0.0100	n/a	n/a	-0.0302
SI(LH)	CLK&D&!RN&!SE&SETN	0.0100	n/a	n/a	-0.0302
SI(LH)	CLK&D&!RN&SE&!SETN	0.0100	n/a	n/a	-0.0256
SI(LH)	CLK&D&!RN&SE&SETN	0.0100	n/a	n/a	-0.0256
SI(LH)	CLK&!D&RN&!SE&SETN	0.0100	n/a	n/a	-0.0315
SI(LH)	CLK&!D&RN&SE&SETN	0.0100	n/a	n/a	-0.0256
SI(LH)	!CLK&D&RN&!SE&SETN	0.0100	n/a	n/a	-0.0291
SI(LH)	!CLK&D&RN&SE&SETN	0.0100	n/a	n/a	0.2945
SI(LH)	!CLK&!D&RN&!SE&!SETN	0.0100	n/a	n/a	-0.0315
SI(LH)	!CLK&!D&RN&SE&!SETN	0.0100	n/a	n/a	0.1216
SI(LH)	!CLK&D&RN&!SE&!SETN	0.0100	n/a	n/a	-0.0291
SI(LH)	!CLK&D&RN&SE&!SETN	0.0100	n/a	n/a	0.1057
SI(LH)	CLK&!D&RN&!SE&!SETN	0.0100	n/a	n/a	-0.0315
SI(LH)	CLK&!D&RN&SE&!SETN	0.0100	n/a	n/a	-0.0255
SI(LH)	CLK&D&RN&!SE&!SETN	0.0100	n/a	n/a	-0.0302
SI(LH)	CLK&D&RN&SE&!SETN	0.0100	n/a	n/a	-0.0256
SI(LH)	CLK&D&RN&!SE&SETN	0.0100	n/a	n/a	-0.0295
SI(LH)	CLK&D&RN&SE&SETN	0.0100	n/a	n/a	-0.0256
SI(LH)	!CLK&!D&RN&!SE&SETN	0.0100	n/a	n/a	-0.0316
SI(LH)	!CLK&!D&RN&SE&SETN	0.0100	n/a	n/a	0.3138
CLK(HL)	!D&!RN&!SE&!SETN&!SI	0.0100	n/a	n/a	0.4783
CLK(HL)	!D&!RN&!SE&!SETN&SI	0.0100	n/a	n/a	0.4783
CLK(HL)	!D&!RN&!SE&SETN&!SI	0.0100	n/a	n/a	0.4713

continues on next page

Table 296 – continued from previous page

CLK(HL)	!D&!RN&!SE&SETN&SI	0.0100	n/a	n/a	0.4713
CLK(HL)	!D&!RN&SE&!SETN&!SI	0.0100	n/a	n/a	0.5068
CLK(HL)	!D&!RN&SE&!SETN&SI	0.0100	n/a	n/a	0.5481
CLK(HL)	!D&!RN&SE&SETN&!SI	0.0100	n/a	n/a	0.5003
CLK(HL)	!D&!RN&SE&SETN&SI	0.0100	n/a	n/a	0.7270
CLK(HL)	D&!RN&!SE&!SETN&!SI	0.0100	n/a	n/a	0.5189
CLK(HL)	D&!RN&!SE&!SETN&SI	0.0100	n/a	n/a	0.5189
CLK(HL)	D&!RN&!SE&SETN&!SI	0.0100	n/a	n/a	0.6861
CLK(HL)	D&!RN&!SE&SETN&SI	0.0100	n/a	n/a	0.6861
CLK(HL)	D&!RN&SE&!SETN&!SI	0.0100	n/a	n/a	0.5352
CLK(HL)	D&!RN&SE&!SETN&SI	0.0100	n/a	n/a	0.5324
CLK(HL)	D&!RN&SE&SETN&!SI	0.0100	n/a	n/a	0.5335
CLK(HL)	D&!RN&SE&SETN&SI	0.0100	n/a	n/a	0.7062
CLK(HL)	!D&RN&!SE&SETN&!SI	0.0100	n/a	n/a	0.4101
CLK(HL)	!D&RN&SE&SETN&!SI	0.0100	n/a	n/a	0.4102
CLK(HL)	!D&RN&!SE&SETN&SI	0.0100	n/a	n/a	0.4101
CLK(HL)	!D&RN&SE&SETN&SI	0.0100	n/a	n/a	0.4092
CLK(HL)	D&RN&!SE&SETN&!SI	0.0100	n/a	n/a	0.4093
CLK(HL)	D&RN&SE&SETN&!SI	0.0100	n/a	n/a	0.4101
CLK(HL)	!D&RN&!SE&!SETN&!SI	0.0100	n/a	n/a	0.6080
CLK(HL)	!D&RN&!SE&!SETN&SI	0.0100	n/a	n/a	0.6080
CLK(HL)	!D&RN&SE&!SETN&!SI	0.0100	n/a	n/a	0.6358
CLK(HL)	!D&RN&SE&!SETN&SI	0.0100	n/a	n/a	0.4680
CLK(HL)	D&RN&!SE&!SETN&!SI	0.0100	n/a	n/a	0.4388
CLK(HL)	D&RN&!SE&!SETN&SI	0.0100	n/a	n/a	0.4388
CLK(HL)	D&RN&SE&!SETN&!SI	0.0100	n/a	n/a	0.6630
CLK(HL)	D&RN&SE&!SETN&SI	0.0100	n/a	n/a	0.4520
CLK(HL)	D&RN&!SE&SETN&SI	0.0100	n/a	n/a	0.4093
CLK(HL)	D&RN&SE&SETN&SI	0.0100	n/a	n/a	0.4092
SI(HL)	!CLK&!D&!RN&!SE&!SETN	0.0100	n/a	n/a	0.0324
SI(HL)	!CLK&!D&!RN&!SE&SETN	0.0100	n/a	n/a	0.0324
SI(HL)	!CLK&!D&!RN&SE&!SETN	0.0100	n/a	n/a	0.3502
SI(HL)	!CLK&!D&!RN&SE&SETN	0.0100	n/a	n/a	0.5136
SI(HL)	!CLK&D&!RN&!SE&!SETN	0.0100	n/a	n/a	0.0321
SI(HL)	!CLK&D&!RN&!SE&SETN	0.0100	n/a	n/a	0.0321
SI(HL)	!CLK&D&!RN&SE&!SETN	0.0100	n/a	n/a	0.3552
SI(HL)	!CLK&D&!RN&SE&SETN	0.0100	n/a	n/a	0.5239
SI(HL)	CLK&!D&!RN&!SE&!SETN	0.0100	n/a	n/a	0.0321
SI(HL)	CLK&!D&!RN&!SE&SETN	0.0100	n/a	n/a	0.0321
SI(HL)	CLK&!D&!RN&SE&!SETN	0.0100	n/a	n/a	0.0323
SI(HL)	CLK&!D&!RN&SE&SETN	0.0100	n/a	n/a	0.0323
SI(HL)	CLK&D&!RN&!SE&!SETN	0.0100	n/a	n/a	0.0321
SI(HL)	CLK&D&!RN&!SE&SETN	0.0100	n/a	n/a	0.0321
SI(HL)	CLK&D&!RN&SE&!SETN	0.0100	n/a	n/a	0.0322
SI(HL)	CLK&D&!RN&SE&SETN	0.0100	n/a	n/a	0.0322
SI(HL)	CLK&!D&RN&!SE&SETN	0.0100	n/a	n/a	0.0321
SI(HL)	CLK&!D&RN&SE&SETN	0.0100	n/a	n/a	0.1190
SI(HL)	!CLK&D&RN&!SE&SETN	0.0100	n/a	n/a	0.0321
SI(HL)	!CLK&D&RN&SE&SETN	0.0100	n/a	n/a	0.5082
SI(HL)	!CLK&!D&RN&!SE&!SETN	0.0100	n/a	n/a	0.0324
SI(HL)	!CLK&!D&RN&SE&!SETN	0.0100	n/a	n/a	0.3502
SI(HL)	!CLK&D&RN&!SE&!SETN	0.0100	n/a	n/a	0.0321

continues on next page

Table 296 – continued from previous page

SI(HL)	!CLK&D&RN&SE&!SETN	0.0100	n/a	n/a	0.3553
SI(HL)	CLK&!D&RN&!SE&!SETN	0.0100	n/a	n/a	0.0321
SI(HL)	CLK&!D&RN&SE&!SETN	0.0100	n/a	n/a	0.0322
SI(HL)	CLK&D&RN&!SE&!SETN	0.0100	n/a	n/a	0.0321
SI(HL)	CLK&D&RN&SE&!SETN	0.0100	n/a	n/a	0.0322
SI(HL)	CLK&D&RN&!SE&SETN	0.0100	n/a	n/a	0.0321
SI(HL)	CLK&D&RN&SE&SETN	0.0100	n/a	n/a	0.0957
SI(HL)	!CLK&!D&RN&!SE&SETN	0.0100	n/a	n/a	0.0324
SI(HL)	!CLK&!D&RN&SE&SETN	0.0100	n/a	n/a	0.4981
D(LH)	!CLK&!RN&!SE&!SETN&!SI	0.0100	n/a	n/a	0.0957
D(LH)	!CLK&!RN&!SE&!SETN&SI	0.0100	n/a	n/a	0.0957
D(LH)	!CLK&!RN&!SE&SETN&!SI	0.0100	n/a	n/a	0.2694
D(LH)	!CLK&!RN&!SE&SETN&SI	0.0100	n/a	n/a	0.2694
D(LH)	!CLK&!RN&SE&!SETN&!SI	0.0100	n/a	n/a	-0.0290
D(LH)	!CLK&!RN&SE&!SETN&SI	0.0100	n/a	n/a	-0.0101
D(LH)	!CLK&!RN&SE&SETN&!SI	0.0100	n/a	n/a	-0.0289
D(LH)	!CLK&!RN&SE&SETN&SI	0.0100	n/a	n/a	-0.0101
D(LH)	CLK&!RN&!SE&!SETN&!SI	0.0100	n/a	n/a	-0.0270
D(LH)	CLK&!RN&!SE&!SETN&SI	0.0100	n/a	n/a	-0.0268
D(LH)	CLK&!RN&!SE&SETN&!SI	0.0100	n/a	n/a	-0.0270
D(LH)	CLK&!RN&!SE&SETN&SI	0.0100	n/a	n/a	-0.0268
D(LH)	CLK&!RN&SE&!SETN&!SI	0.0100	n/a	n/a	-0.0313
D(LH)	CLK&!RN&SE&!SETN&SI	0.0100	n/a	n/a	-0.0214
D(LH)	CLK&!RN&SE&SETN&!SI	0.0100	n/a	n/a	-0.0313
D(LH)	CLK&!RN&SE&SETN&SI	0.0100	n/a	n/a	-0.0214
D(LH)	!CLK&RN&!SE&SETN&!SI	0.0100	n/a	n/a	0.2793
D(LH)	!CLK&RN&SE&SETN&!SI	0.0100	n/a	n/a	-0.0290
D(LH)	!CLK&RN&!SE&SETN&SI	0.0100	n/a	n/a	0.2793
D(LH)	!CLK&RN&SE&SETN&SI	0.0100	n/a	n/a	-0.0101
D(LH)	CLK&RN&!SE&SETN&!SI	0.0100	n/a	n/a	-0.0270
D(LH)	CLK&RN&SE&SETN&!SI	0.0100	n/a	n/a	-0.0313
D(LH)	!CLK&RN&!SE&!SETN&!SI	0.0100	n/a	n/a	0.0957
D(LH)	!CLK&RN&!SE&!SETN&SI	0.0100	n/a	n/a	0.0958
D(LH)	!CLK&RN&SE&!SETN&!SI	0.0100	n/a	n/a	-0.0290
D(LH)	!CLK&RN&SE&!SETN&SI	0.0100	n/a	n/a	-0.0101
D(LH)	CLK&RN&!SE&!SETN&!SI	0.0100	n/a	n/a	-0.0246
D(LH)	CLK&RN&!SE&!SETN&SI	0.0100	n/a	n/a	-0.0244
D(LH)	CLK&RN&SE&!SETN&!SI	0.0100	n/a	n/a	-0.0313
D(LH)	CLK&RN&SE&!SETN&SI	0.0100	n/a	n/a	-0.0209
D(LH)	CLK&RN&!SE&SETN&SI	0.0100	n/a	n/a	-0.0267
D(LH)	CLK&RN&SE&SETN&SI	0.0100	n/a	n/a	-0.0106
RN(HL)	!CLK&!D&!SE&SETN&!SI	0.0100	n/a	n/a	0.0956
RN(HL)	!CLK&D&SE&SETN&!SI	0.0100	n/a	n/a	0.0956
RN(HL)	!CLK&D&!SE&SETN&SI	0.0100	n/a	n/a	0.0947
RN(HL)	!CLK&D&SE&SETN&SI	0.0100	n/a	n/a	0.0947
RN(HL)	CLK&D&!SE&SETN&!SI	0.0100	n/a	n/a	0.0977
RN(HL)	CLK&D&SE&SETN&!SI	0.0100	n/a	n/a	0.0979
RN(HL)	CLK&D&!SE&SETN&SI	0.0100	n/a	n/a	0.0977
RN(HL)	CLK&D&SE&SETN&SI	0.0100	n/a	n/a	0.0977
RN(HL)	!CLK&!D&SE&SETN&!SI	0.0100	n/a	n/a	0.0956
RN(HL)	!CLK&!D&!SE&SETN&SI	0.0100	n/a	n/a	0.0956
RN(HL)	!CLK&!D&SE&SETN&SI	0.0100	n/a	n/a	0.0947

continues on next page

Table 296 – continued from previous page

RN(HL)	CLK&!D&!SE&SETN&!SI	0.0100	n/a	n/a	0.0978
RN(HL)	CLK&!D&SE&SETN&!SI	0.0100	n/a	n/a	0.0978
RN(HL)	CLK&!D&!SE&SETN&SI	0.0100	n/a	n/a	0.0978
RN(HL)	CLK&!D&SE&SETN&SI	0.0100	n/a	n/a	0.0977
RN(HL)	!CLK&D&!SE&SETN&!SI	0.0100	n/a	n/a	0.0947
RN(LH)	!CLK&!D&!SE&SETN&!SI	0.0100	n/a	n/a	-0.0916
RN(LH)	!CLK&!D&!SE&SETN&SI	0.0100	n/a	n/a	-0.0916
RN(LH)	!CLK&!D&SE&SETN&!SI	0.0100	n/a	n/a	-0.0916
RN(LH)	!CLK&!D&SE&SETN&SI	0.0100	n/a	n/a	-0.0866
RN(LH)	!CLK&D&!SE&SETN&!SI	0.0100	n/a	n/a	-0.0865
RN(LH)	!CLK&D&!SE&SETN&SI	0.0100	n/a	n/a	-0.0865
RN(LH)	!CLK&D&SE&SETN&!SI	0.0100	n/a	n/a	-0.0916
RN(LH)	!CLK&D&SE&SETN&SI	0.0100	n/a	n/a	-0.0866
RN(LH)	CLK&!D&!SE&SETN&!SI	0.0100	n/a	n/a	-0.0916
RN(LH)	CLK&!D&!SE&SETN&SI	0.0100	n/a	n/a	-0.0916
RN(LH)	CLK&!D&SE&SETN&!SI	0.0100	n/a	n/a	-0.0916
RN(LH)	CLK&!D&SE&SETN&SI	0.0100	n/a	n/a	-0.0916
RN(LH)	CLK&D&!SE&SETN&!SI	0.0100	n/a	n/a	-0.0916
RN(LH)	CLK&D&!SE&SETN&SI	0.0100	n/a	n/a	-0.0916
RN(LH)	CLK&D&SE&SETN&!SI	0.0100	n/a	n/a	-0.0916
RN(LH)	CLK&D&SE&SETN&SI	0.0100	n/a	n/a	-0.0916
SETN(LH)	!CLK&!D&!RN&!SE&!SI	0.0100	n/a	n/a	0.2150
SETN(LH)	!CLK&!D&!RN&!SE&SI	0.0100	n/a	n/a	0.2150
SETN(LH)	!CLK&!D&!RN&SE&!SI	0.0100	n/a	n/a	0.2150
SETN(LH)	!CLK&!D&!RN&SE&SI	0.0100	n/a	n/a	0.1158
SETN(LH)	!CLK&D&!RN&!SE&!SI	0.0100	n/a	n/a	0.1158
SETN(LH)	!CLK&D&!RN&!SE&SI	0.0100	n/a	n/a	0.1158
SETN(LH)	!CLK&D&!RN&SE&!SI	0.0100	n/a	n/a	0.2150
SETN(LH)	!CLK&D&!RN&SE&SI	0.0100	n/a	n/a	0.1158
SETN(LH)	CLK&!D&!RN&!SE&!SI	0.0100	n/a	n/a	0.2053
SETN(LH)	CLK&!D&!RN&!SE&SI	0.0100	n/a	n/a	0.2053
SETN(LH)	CLK&!D&!RN&SE&!SI	0.0100	n/a	n/a	0.2053
SETN(LH)	CLK&!D&!RN&SE&SI	0.0100	n/a	n/a	0.2053
SETN(LH)	CLK&D&!RN&!SE&!SI	0.0100	n/a	n/a	0.2053
SETN(LH)	CLK&D&!RN&!SE&SI	0.0100	n/a	n/a	0.2053
SETN(LH)	CLK&D&!RN&SE&!SI	0.0100	n/a	n/a	0.2053
SETN(LH)	CLK&D&!RN&SE&SI	0.0100	n/a	n/a	0.2053
SETN(LH)	!CLK&!D&RN&!SE&!SI	0.0100	n/a	n/a	0.0358
SETN(LH)	!CLK&!D&RN&!SE&SI	0.0100	n/a	n/a	0.0358
SETN(LH)	!CLK&!D&RN&SE&!SI	0.0100	n/a	n/a	0.0358
SETN(LH)	!CLK&!D&RN&SE&SI	0.0100	n/a	n/a	-0.0508
SETN(LH)	!CLK&D&RN&!SE&!SI	0.0100	n/a	n/a	-0.0508
SETN(LH)	!CLK&D&RN&!SE&SI	0.0100	n/a	n/a	-0.0508
SETN(LH)	!CLK&D&RN&SE&!SI	0.0100	n/a	n/a	0.0358
SETN(LH)	!CLK&D&RN&SE&SI	0.0100	n/a	n/a	-0.0508
SETN(LH)	CLK&!D&RN&!SE&!SI	0.0100	n/a	n/a	-0.0507
SETN(LH)	CLK&!D&RN&!SE&SI	0.0100	n/a	n/a	-0.0507
SETN(LH)	CLK&!D&RN&SE&!SI	0.0100	n/a	n/a	-0.0507
SETN(LH)	CLK&!D&RN&SE&SI	0.0100	n/a	n/a	-0.0507
SETN(LH)	CLK&D&RN&!SE&!SI	0.0100	n/a	n/a	-0.0507
SETN(LH)	CLK&D&RN&!SE&SI	0.0100	n/a	n/a	-0.0507
SETN(LH)	CLK&D&RN&SE&!SI	0.0100	n/a	n/a	-0.0507

continues on next page

Table 296 – continued from previous page

SETN(LH)	CLK&D&RN&SE&SI	0.0100	n/a	n/a	-0.0507

LEAKAGE POWER

When Condition	Power (nW)
!CLK&!D&!RN&!SE&!SETN&!SI	0.5622
!CLK&!D&!RN&!SE&!SETN&SI	0.5623
!CLK&!D&!RN&!SE&SETN&!SI	0.5792
!CLK&!D&!RN&!SE&SETN&SI	0.5794
!CLK&!D&!RN&SE&!SETN&!SI	0.6023
!CLK&!D&!RN&SE&!SETN&SI	0.6298
!CLK&!D&!RN&SE&SETN&!SI	0.6194
!CLK&!D&!RN&SE&SETN&SI	0.6592
!CLK&D&!RN&!SE&!SETN&!SI	0.5582
!CLK&D&!RN&!SE&!SETN&SI	0.5582
!CLK&D&!RN&!SE&SETN&!SI	0.5876
!CLK&D&!RN&!SE&SETN&SI	0.5876
!CLK&D&!RN&SE&!SETN&!SI	0.6418
!CLK&D&!RN&SE&!SETN&SI	0.5944
!CLK&D&!RN&SE&SETN&!SI	0.6589
!CLK&D&!RN&SE&SETN&SI	0.6238
CLK&!D&!RN&!SE&!SETN&!SI	0.5813
CLK&!D&!RN&!SE&!SETN&SI	0.5813
CLK&!D&!RN&!SE&SETN&!SI	0.5590
CLK&!D&!RN&!SE&SETN&SI	0.5590
CLK&!D&!RN&SE&!SETN&!SI	0.5822
CLK&!D&!RN&SE&!SETN&SI	0.5824
CLK&!D&!RN&SE&SETN&!SI	0.5599
CLK&!D&!RN&SE&SETN&SI	0.5601
CLK&D&!RN&!SE&!SETN&!SI	0.5815
CLK&D&!RN&!SE&!SETN&SI	0.5815
CLK&D&!RN&!SE&SETN&!SI	0.5592
CLK&D&!RN&!SE&SETN&SI	0.5592
CLK&D&!RN&SE&!SETN&!SI	0.5822
CLK&D&!RN&SE&!SETN&SI	0.5824
CLK&D&!RN&SE&SETN&!SI	0.5599
CLK&D&!RN&SE&SETN&SI	0.5601
!CLK&!D&RN&!SE&SETN&!SI	0.7744
!CLK&!D&RN&!SE&SETN&SI	0.7746
!CLK&!D&RN&SE&SETN&!SI	0.8146
!CLK&!D&RN&SE&SETN&SI	0.8069
!CLK&D&RN&!SE&SETN&!SI	0.7353
!CLK&D&RN&!SE&SETN&SI	0.7353
!CLK&D&RN&SE&SETN&!SI	0.8541
!CLK&D&RN&SE&SETN&SI	0.7716
CLK&!D&RN&!SE&SETN&!SI	0.5998
CLK&!D&RN&!SE&SETN&SI	0.5998

continues on next page

Table 297 – continued from previous page

CLK&!D&RN&SE&SETN&!SI	0.6006
CLK&D&RN&SE&SETN&!SI	0.6006
!CLK&!D&RN&!SE&!SETN&!SI	0.5454
!CLK&!D&RN&!SE&!SETN&SI	0.5456
!CLK&!D&RN&SE&!SETN&!SI	0.5856
!CLK&!D&RN&SE&!SETN&SI	0.6129
!CLK&D&RN&!SE&!SETN&!SI	0.5413
!CLK&D&RN&!SE&!SETN&SI	0.5413
!CLK&D&RN&SE&!SETN&!SI	0.6251
!CLK&D&RN&SE&!SETN&SI	0.5775
CLK&!D&RN&!SE&!SETN&!SI	0.5413
CLK&!D&RN&!SE&!SETN&SI	0.5413
CLK&!D&RN&SE&!SETN&!SI	0.5422
CLK&!D&RN&SE&!SETN&SI	0.5422
CLK&D&RN&!SE&!SETN&!SI	0.5413
CLK&D&RN&!SE&!SETN&SI	0.5413
CLK&D&RN&SE&!SETN&!SI	0.5422
CLK&D&RN&SE&!SETN&SI	0.5422
CLK&!D&RN&SE&SETN&SI	0.8969
CLK&D&RN&!SE&SETN&!SI	0.8592
CLK&D&RN&!SE&SETN&SI	0.8592
CLK&D&RN&SE&SETN&SI	0.8799

gf180mcu_fd_sc_mcu9t5v0__sdffsnq_1

gf180mcu_fd_sc_mcu9t5v0__sdffsnq_1 symbol

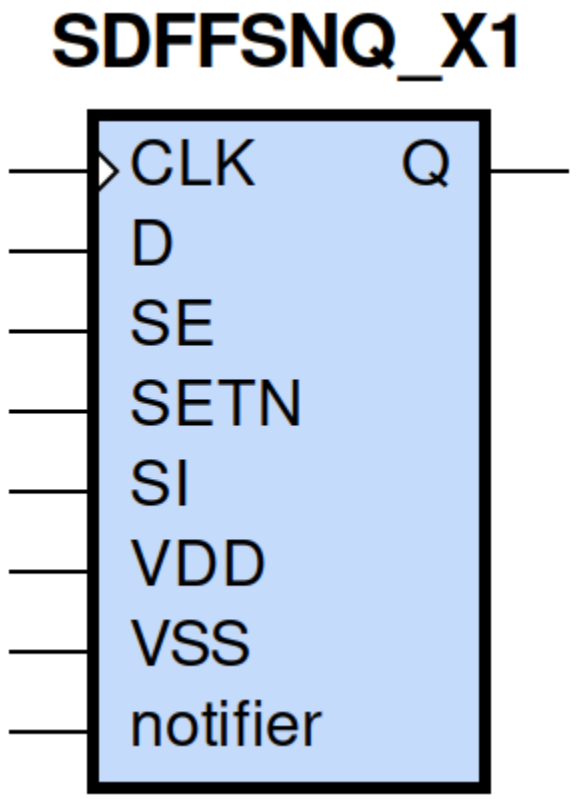

gf180mcu_fd_sc_mcu9t5v0__sdffsnq_1 schematic

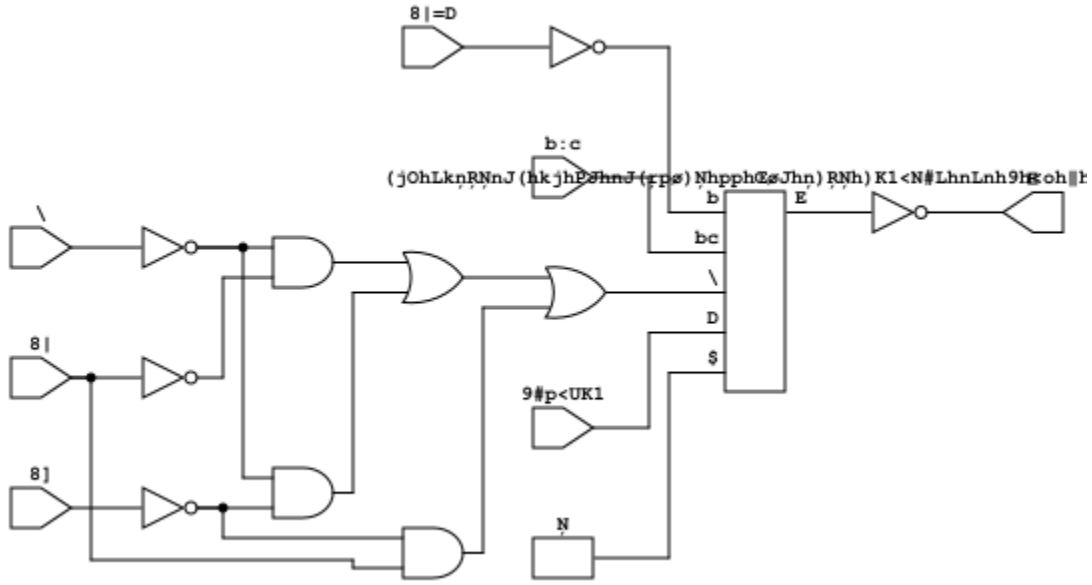

gf180mcu_fd_sc_mcu9t5v0__sdffsnq_1 layout

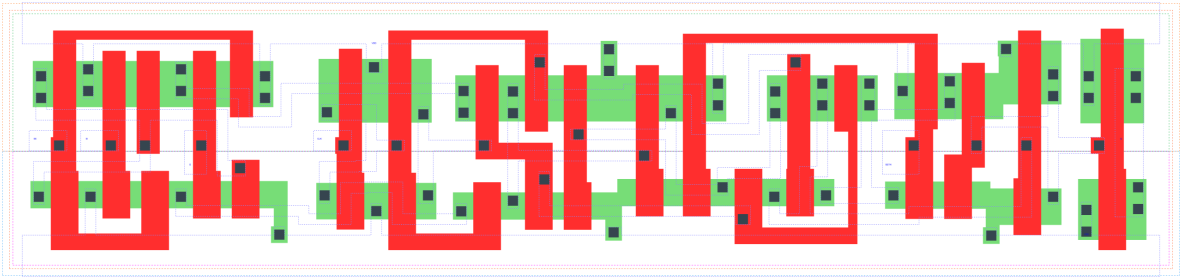

SDFFSNQ_X1 is a positive edge triggered scan D-type flip flop with active low set and 1X drive strength

Attributes

Attribute	Value
area	124.185600 μm^2

TRUTH TABLE

Input					Output
SETN	SE	SI	D	CLK	Q
H	L	X	L	↑	L
H	L	X	H	↑	H
H	H	L	X	↑	L
H	H	H	X	↑	H
L	X	X	X	X	H

FUNCTIONAL SCHEMATIC

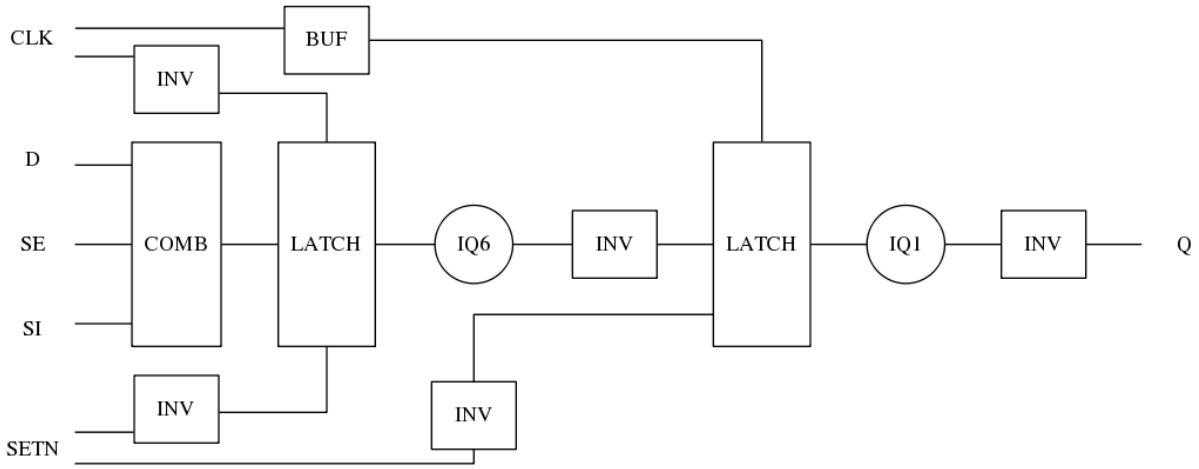

CONSTRAINTS

Constraint Pin	Related Pin	setup(ns)	hold(ns)
SE(LH)	CLK(LH)	0.4690	-0.1830
SE(LH)	CLK(LH)	0.6760	-0.1550
SE(HL)	CLK(LH)	0.5610	-0.1140
SE(HL)	CLK(LH)	0.5500	-0.2810
SI(HL)	CLK(LH)	0.6410	-0.1550
SI(HL)	CLK(LH)	0.6470	-0.1260
SI(LH)	CLK(LH)	0.5150	-0.2290
SI(LH)	CLK(LH)	0.5040	-0.2290
D(HL)	CLK(LH)	0.5440	-0.0970
D(HL)	CLK(LH)	0.5440	-0.0970
D(LH)	CLK(LH)	0.4410	-0.1770
D(LH)	CLK(LH)	0.4410	-0.1770

Constraint Pin	Related Pin	recovery(ns)	removal(ns)
SETN(LH)	CLK(LH)	0.0230	0.1600
SETN(LH)	CLK(LH)	0.0230	0.1600
SETN(LH)	CLK(LH)	0.0230	0.1600
SETN(LH)	CLK(LH)	0.0230	0.1600

Constraint Pin	Related Pin	Minimum Pulse Width(ns)
CLK(HLH)	CLK(HL)	0.6560
CLK(HLH)	CLK(HL)	0.6750
CLK(HLH)	CLK(HL)	0.6560
CLK(HLH)	CLK(HL)	0.5950
CLK(HLH)	CLK(HL)	0.5220
CLK(HLH)	CLK(HL)	0.7420
CLK(HLH)	CLK(HL)	0.5220
CLK(HLH)	CLK(HL)	0.5590
CLK(LHL)	CLK(LH)	0.3680
CLK(LHL)	CLK(LH)	0.3680
CLK(LHL)	CLK(LH)	0.3680
CLK(LHL)	CLK(LH)	0.3390
CLK(LHL)	CLK(LH)	0.3390
CLK(LHL)	CLK(LH)	0.3680
CLK(LHL)	CLK(LH)	0.3390
CLK(LHL)	CLK(LH)	0.3390
SETN(HLH)	SETN(HL)	0.3190
SETN(HLH)	SETN(HL)	0.3190
SETN(HLH)	SETN(HL)	0.3190
SETN(HLH)	SETN(HL)	0.3190
SETN(HLH)	SETN(HL)	0.3390
SETN(HLH)	SETN(HL)	0.3390
SETN(HLH)	SETN(HL)	0.3390
SETN(HLH)	SETN(HL)	0.3390
SETN(HLH)	SETN(HL)	0.3190
SETN(HLH)	SETN(HL)	0.3190
SETN(HLH)	SETN(HL)	0.3190
SETN(HLH)	SETN(HL)	0.3390
SETN(HLH)	SETN(HL)	0.3390
SETN(HLH)	SETN(HL)	0.3390
SETN(HLH)	SETN(HL)	0.3390
SETN(HLH)	SETN(HL)	0.3190

PIN CAPACITANCE (pf)

Pin	Type	Capacitance (pf)
SE	input	0.0085
SI	input	0.0039
D	input	0.0039
CLK	input	0.0050
SETN	input	0.0087

DELAY AND OUTPUT TRANSITION TIME corresponding to min slew and load

Input Pin	Output	When Condition	Tin (ns)	Out Load (pf)	Delay (ns)	Tout (ns)
CLK(LH)	Q(HL)	!D&!SE&SETN&!SI	0.0100	0.0010	0.5713	0.0362
CLK(LH)	Q(HL)	!D&!SE&SETN&SI	0.0100	0.0010	0.5713	0.0362
CLK(LH)	Q(HL)	!D&SE&SETN&!SI	0.0100	0.0010	0.5713	0.0362
CLK(LH)	Q(HL)	D&SE&SETN&!SI	0.0100	0.0010	0.5713	0.0362
CLK(LH)	Q(LH)	!D&SE&SETN&SI	0.0100	0.0010	0.5214	0.0383
CLK(LH)	Q(LH)	D&!SE&SETN&!SI	0.0100	0.0010	0.5214	0.0383
CLK(LH)	Q(LH)	D&!SE&SETN&SI	0.0100	0.0010	0.5214	0.0383
CLK(LH)	Q(LH)	D&SE&SETN&SI	0.0100	0.0010	0.5215	0.0383
SETN(HL)	Q(LH)	!CLK&!D&!SE&!SI	0.0100	0.0010	0.4413	0.0380
SETN(HL)	Q(LH)	!CLK&D&SE&!SI	0.0100	0.0010	0.4413	0.0380
SETN(HL)	Q(LH)	!CLK&D&!SE&SI	0.0100	0.0010	0.4417	0.0380
SETN(HL)	Q(LH)	!CLK&D&SE&SI	0.0100	0.0010	0.4417	0.0380
SETN(HL)	Q(LH)	CLK&D&!SE&!SI	0.0100	0.0010	0.4838	0.0382
SETN(HL)	Q(LH)	CLK&D&SE&!SI	0.0100	0.0010	0.4838	0.0382
SETN(HL)	Q(LH)	CLK&D&!SE&SI	0.0100	0.0010	0.4838	0.0382
SETN(HL)	Q(LH)	CLK&D&SE&SI	0.0100	0.0010	0.4838	0.0382
SETN(HL)	Q(LH)	!CLK&!D&SE&!SI	0.0100	0.0010	0.4413	0.0380
SETN(HL)	Q(LH)	!CLK&!D&!SE&SI	0.0100	0.0010	0.4413	0.0380
SETN(HL)	Q(LH)	!CLK&!D&SE&SI	0.0100	0.0010	0.4417	0.0380
SETN(HL)	Q(LH)	CLK&!D&!SE&!SI	0.0100	0.0010	0.4838	0.0382
SETN(HL)	Q(LH)	CLK&!D&SE&!SI	0.0100	0.0010	0.4838	0.0382
SETN(HL)	Q(LH)	CLK&!D&!SE&SI	0.0100	0.0010	0.4836	0.0381
SETN(HL)	Q(LH)	CLK&!D&SE&SI	0.0100	0.0010	0.4838	0.0382
SETN(HL)	Q(LH)	!CLK&D&!SE&!SI	0.0100	0.0010	0.4417	0.0380

DYNAMIC ENERGY

Input Pin	When Condition	Tin (ns)	Output	Out Load (pf)	Energy (uW/MHz)
CLK	!D&!SE&SETN&!SI	0.0100	Q(HL)	0.0010	0.7987
CLK	!D&!SE&SETN&SI	0.0100	Q(HL)	0.0010	0.7990
CLK	!D&SE&SETN&!SI	0.0100	Q(HL)	0.0010	0.7989
CLK	D&SE&SETN&!SI	0.0100	Q(HL)	0.0010	0.7989
CLK	!D&SE&SETN&SI	0.0100	Q(LH)	0.0010	0.8395
CLK	D&!SE&SETN&!SI	0.0100	Q(LH)	0.0010	0.8395
CLK	D&!SE&SETN&SI	0.0100	Q(LH)	0.0010	0.8395
CLK	D&SE&SETN&SI	0.0100	Q(LH)	0.0010	0.8395
SETN	!CLK&!D&!SE&!SI	0.0100	Q(LH)	0.0010	0.7282
SETN	!CLK&D&SE&!SI	0.0100	Q(LH)	0.0010	0.7284
SETN	!CLK&D&!SE&SI	0.0100	Q(LH)	0.0010	0.6002
SETN	!CLK&D&SE&SI	0.0100	Q(LH)	0.0010	0.6002
SETN	CLK&D&!SE&!SI	0.0100	Q(LH)	0.0010	0.8590
SETN	CLK&D&SE&!SI	0.0100	Q(LH)	0.0010	0.8590
SETN	CLK&D&!SE&SI	0.0100	Q(LH)	0.0010	0.8591
SETN	CLK&D&SE&SI	0.0100	Q(LH)	0.0010	0.8590
SETN	!CLK&!D&SE&!SI	0.0100	Q(LH)	0.0010	0.7284
SETN	!CLK&!D&!SE&SI	0.0100	Q(LH)	0.0010	0.7282

continues on next page

Table 299 – continued from previous page

SETN	!CLK&!D&SE&SI	0.0100	Q(LH)	0.0010	0.6002
SETN	CLK&!D&!SE&!SI	0.0100	Q(LH)	0.0010	0.8590
SETN	CLK&!D&SE&!SI	0.0100	Q(LH)	0.0010	0.8590
SETN	CLK&!D&!SE&SI	0.0100	Q(LH)	0.0010	0.8588
SETN	CLK&!D&SE&SI	0.0100	Q(LH)	0.0010	0.8590
SETN	!CLK&D&!SE&!SI	0.0100	Q(LH)	0.0010	0.6002
SETN(HL)	!CLK&!D&!SE&!SI	0.0100	n/a	n/a	0.1971
SETN(HL)	!CLK&D&SE&!SI	0.0100	n/a	n/a	0.1971
SETN(HL)	!CLK&D&!SE&SI	0.0100	n/a	n/a	0.0708
SETN(HL)	!CLK&D&SE&SI	0.0100	n/a	n/a	0.0708
SETN(HL)	CLK&D&!SE&!SI	0.0100	n/a	n/a	0.0708
SETN(HL)	CLK&D&SE&!SI	0.0100	n/a	n/a	0.0708
SETN(HL)	CLK&D&!SE&SI	0.0100	n/a	n/a	0.0708
SETN(HL)	CLK&D&SE&SI	0.0100	n/a	n/a	0.0708
SETN(HL)	!CLK&!D&SE&!SI	0.0100	n/a	n/a	0.1971
SETN(HL)	!CLK&!D&!SE&SI	0.0100	n/a	n/a	0.1971
SETN(HL)	!CLK&!D&SE&SI	0.0100	n/a	n/a	0.0708
SETN(HL)	CLK&!D&!SE&!SI	0.0100	n/a	n/a	0.0708
SETN(HL)	CLK&!D&SE&!SI	0.0100	n/a	n/a	0.0708
SETN(HL)	CLK&!D&!SE&SI	0.0100	n/a	n/a	0.0708
SETN(HL)	CLK&!D&SE&SI	0.0100	n/a	n/a	0.0708
SETN(HL)	!CLK&D&!SE&!SI	0.0100	n/a	n/a	0.0708
D(HL)	!CLK&!SE&!SETN&!SI	0.0100	n/a	n/a	0.2593
D(HL)	!CLK&!SE&!SETN&SI	0.0100	n/a	n/a	0.2593
D(HL)	!CLK&SE&!SETN&!SI	0.0100	n/a	n/a	0.0328
D(HL)	!CLK&SE&!SETN&SI	0.0100	n/a	n/a	0.0161
D(HL)	CLK&!SE&!SETN&!SI	0.0100	n/a	n/a	0.0321
D(HL)	CLK&!SE&!SETN&SI	0.0100	n/a	n/a	0.0321
D(HL)	CLK&SE&!SETN&!SI	0.0100	n/a	n/a	0.0321
D(HL)	CLK&SE&!SETN&SI	0.0100	n/a	n/a	0.0167
D(HL)	CLK&!SE&SETN&!SI	0.0100	n/a	n/a	0.0659
D(HL)	CLK&SE&SETN&!SI	0.0100	n/a	n/a	0.0321
D(HL)	CLK&!SE&SETN&SI	0.0100	n/a	n/a	0.0659
D(HL)	CLK&SE&SETN&SI	0.0100	n/a	n/a	0.0142
D(HL)	!CLK&!SE&SETN&!SI	0.0100	n/a	n/a	0.3938
D(HL)	!CLK&SE&SETN&!SI	0.0100	n/a	n/a	0.0329
D(HL)	!CLK&!SE&SETN&SI	0.0100	n/a	n/a	0.3938
D(HL)	!CLK&SE&SETN&SI	0.0100	n/a	n/a	0.0161
SE(LH)	!CLK&!D&!SETN&!SI	0.0100	n/a	n/a	0.0029
SE(LH)	!CLK&!D&!SETN&SI	0.0100	n/a	n/a	0.1281
SE(LH)	!CLK&D&!SETN&!SI	0.0100	n/a	n/a	0.2718
SE(LH)	!CLK&D&!SETN&SI	0.0100	n/a	n/a	-0.0119
SE(LH)	CLK&!D&!SETN&!SI	0.0100	n/a	n/a	-0.0000
SE(LH)	CLK&!D&!SETN&SI	0.0100	n/a	n/a	-0.0088
SE(LH)	CLK&D&!SETN&!SI	0.0100	n/a	n/a	0.0007
SE(LH)	CLK&D&!SETN&SI	0.0100	n/a	n/a	-0.0129
SE(LH)	!CLK&D&SETN&!SI	0.0100	n/a	n/a	0.4212
SE(LH)	!CLK&D&SETN&SI	0.0100	n/a	n/a	-0.0119
SE(LH)	CLK&D&SETN&!SI	0.0100	n/a	n/a	0.0373
SE(LH)	CLK&D&SETN&SI	0.0100	n/a	n/a	-0.0153
SE(LH)	!CLK&!D&SETN&!SI	0.0100	n/a	n/a	0.0029
SE(LH)	!CLK&!D&SETN&SI	0.0100	n/a	n/a	0.3124

continues on next page

Table 299 – continued from previous page

SE(LH)	CLK&!D&SETN&!SI	0.0100	n/a	n/a	0.0000
SE(LH)	CLK&!D&SETN&SI	0.0100	n/a	n/a	-0.0087
CLK(LH)	!D&!SE&!SETN&!SI	0.0100	n/a	n/a	0.3794
CLK(LH)	!D&!SE&!SETN&SI	0.0100	n/a	n/a	0.3794
CLK(LH)	!D&SE&!SETN&!SI	0.0100	n/a	n/a	0.3797
CLK(LH)	!D&SE&!SETN&SI	0.0100	n/a	n/a	0.2894
CLK(LH)	D&!SE&!SETN&!SI	0.0100	n/a	n/a	0.2895
CLK(LH)	D&!SE&!SETN&SI	0.0100	n/a	n/a	0.2893
CLK(LH)	D&SE&!SETN&!SI	0.0100	n/a	n/a	0.3794
CLK(LH)	D&SE&!SETN&SI	0.0100	n/a	n/a	0.2894
CLK(LH)	D&!SE&SETN&!SI	0.0100	n/a	n/a	0.2891
CLK(LH)	D&SE&SETN&!SI	0.0100	n/a	n/a	0.2748
CLK(LH)	D&!SE&SETN&SI	0.0100	n/a	n/a	0.2892
CLK(LH)	D&SE&SETN&SI	0.0100	n/a	n/a	0.2893
CLK(LH)	!D&!SE&SETN&!SI	0.0100	n/a	n/a	0.2748
CLK(LH)	!D&SE&SETN&!SI	0.0100	n/a	n/a	0.2748
CLK(LH)	!D&!SE&SETN&SI	0.0100	n/a	n/a	0.2748
CLK(LH)	!D&SE&SETN&SI	0.0100	n/a	n/a	0.2892
SI(LH)	!CLK&!D&!SE&!SETN	0.0100	n/a	n/a	-0.0315
SI(LH)	!CLK&!D&SE&!SETN	0.0100	n/a	n/a	0.1268
SI(LH)	!CLK&D&!SE&!SETN	0.0100	n/a	n/a	-0.0293
SI(LH)	!CLK&D&SE&!SETN	0.0100	n/a	n/a	0.1100
SI(LH)	CLK&!D&!SE&!SETN	0.0100	n/a	n/a	-0.0315
SI(LH)	CLK&!D&SE&!SETN	0.0100	n/a	n/a	-0.0259
SI(LH)	CLK&D&!SE&!SETN	0.0100	n/a	n/a	-0.0303
SI(LH)	CLK&D&SE&!SETN	0.0100	n/a	n/a	-0.0260
SI(LH)	!CLK&D&!SE&SETN	0.0100	n/a	n/a	-0.0293
SI(LH)	!CLK&D&SE&SETN	0.0100	n/a	n/a	0.2930
SI(LH)	CLK&D&!SE&SETN	0.0100	n/a	n/a	-0.0297
SI(LH)	CLK&D&SE&SETN	0.0100	n/a	n/a	-0.0260
SI(LH)	!CLK&!D&!SE&SETN	0.0100	n/a	n/a	-0.0316
SI(LH)	!CLK&!D&SE&SETN	0.0100	n/a	n/a	0.3133
SI(LH)	CLK&!D&!SE&SETN	0.0100	n/a	n/a	-0.0315
SI(LH)	CLK&!D&SE&SETN	0.0100	n/a	n/a	-0.0259
SE(HL)	!CLK&!D&!SETN&!SI	0.0100	n/a	n/a	0.1907
SE(HL)	!CLK&!D&!SETN&SI	0.0100	n/a	n/a	0.4413
SE(HL)	!CLK&D&!SETN&!SI	0.0100	n/a	n/a	0.3230
SE(HL)	!CLK&D&!SETN&SI	0.0100	n/a	n/a	0.1934
SE(HL)	CLK&!D&!SETN&!SI	0.0100	n/a	n/a	0.1899
SE(HL)	CLK&!D&!SETN&SI	0.0100	n/a	n/a	0.1904
SE(HL)	CLK&D&!SETN&!SI	0.0100	n/a	n/a	0.1944
SE(HL)	CLK&D&!SETN&SI	0.0100	n/a	n/a	0.2017
SE(HL)	!CLK&D&SETN&!SI	0.0100	n/a	n/a	0.5009
SE(HL)	!CLK&D&SETN&SI	0.0100	n/a	n/a	0.1934
SE(HL)	CLK&D&SETN&!SI	0.0100	n/a	n/a	0.1967
SE(HL)	CLK&D&SETN&SI	0.0100	n/a	n/a	0.1930
SE(HL)	!CLK&!D&SETN&!SI	0.0100	n/a	n/a	0.1907
SE(HL)	!CLK&!D&SETN&SI	0.0100	n/a	n/a	0.5756
SE(HL)	CLK&!D&SETN&!SI	0.0100	n/a	n/a	0.1900
SE(HL)	CLK&!D&SETN&SI	0.0100	n/a	n/a	0.2484
CLK(HL)	!D&!SE&!SETN&!SI	0.0100	n/a	n/a	0.5866
CLK(HL)	!D&!SE&!SETN&SI	0.0100	n/a	n/a	0.5865

continues on next page

Table 299 – continued from previous page

CLK(HL)	!D&SE&!SETN&!SI	0.0100	n/a	n/a	0.6143
CLK(HL)	!D&SE&!SETN&SI	0.0100	n/a	n/a	0.4642
CLK(HL)	D&!SE&!SETN&!SI	0.0100	n/a	n/a	0.4342
CLK(HL)	D&!SE&!SETN&SI	0.0100	n/a	n/a	0.4342
CLK(HL)	D&SE&!SETN&!SI	0.0100	n/a	n/a	0.6415
CLK(HL)	D&SE&!SETN&SI	0.0100	n/a	n/a	0.4474
CLK(HL)	D&!SE&SETN&!SI	0.0100	n/a	n/a	0.4017
CLK(HL)	D&SE&SETN&!SI	0.0100	n/a	n/a	0.4039
CLK(HL)	D&!SE&SETN&SI	0.0100	n/a	n/a	0.4017
CLK(HL)	D&SE&SETN&SI	0.0100	n/a	n/a	0.4015
CLK(HL)	!D&!SE&SETN&!SI	0.0100	n/a	n/a	0.4039
CLK(HL)	!D&SE&SETN&!SI	0.0100	n/a	n/a	0.4037
CLK(HL)	!D&!SE&SETN&SI	0.0100	n/a	n/a	0.4039
CLK(HL)	!D&SE&SETN&SI	0.0100	n/a	n/a	0.4015
SI(HL)	!CLK&!D&!SE&!SETN	0.0100	n/a	n/a	0.0324
SI(HL)	!CLK&!D&SE&!SETN	0.0100	n/a	n/a	0.3323
SI(HL)	!CLK&D&!SE&!SETN	0.0100	n/a	n/a	0.0320
SI(HL)	!CLK&D&SE&!SETN	0.0100	n/a	n/a	0.3373
SI(HL)	CLK&!D&!SE&!SETN	0.0100	n/a	n/a	0.0320
SI(HL)	CLK&!D&SE&!SETN	0.0100	n/a	n/a	0.0320
SI(HL)	CLK&D&!SE&!SETN	0.0100	n/a	n/a	0.0320
SI(HL)	CLK&D&SE&!SETN	0.0100	n/a	n/a	0.0320
SI(HL)	!CLK&D&!SE&SETN	0.0100	n/a	n/a	0.0321
SI(HL)	!CLK&D&SE&SETN	0.0100	n/a	n/a	0.4866
SI(HL)	CLK&D&!SE&SETN	0.0100	n/a	n/a	0.0321
SI(HL)	CLK&D&SE&SETN	0.0100	n/a	n/a	0.0918
SI(HL)	!CLK&!D&!SE&SETN	0.0100	n/a	n/a	0.0325
SI(HL)	!CLK&!D&SE&SETN	0.0100	n/a	n/a	0.4768
SI(HL)	CLK&!D&!SE&SETN	0.0100	n/a	n/a	0.0320
SI(HL)	CLK&!D&SE&SETN	0.0100	n/a	n/a	0.1153
D(LH)	!CLK&!SE&!SETN&!SI	0.0100	n/a	n/a	0.0999
D(LH)	!CLK&!SE&!SETN&SI	0.0100	n/a	n/a	0.0999
D(LH)	!CLK&SE&!SETN&!SI	0.0100	n/a	n/a	-0.0288
D(LH)	!CLK&SE&!SETN&SI	0.0100	n/a	n/a	-0.0103
D(LH)	CLK&!SE&!SETN&!SI	0.0100	n/a	n/a	-0.0251
D(LH)	CLK&!SE&!SETN&SI	0.0100	n/a	n/a	-0.0249
D(LH)	CLK&SE&!SETN&!SI	0.0100	n/a	n/a	-0.0313
D(LH)	CLK&SE&!SETN&SI	0.0100	n/a	n/a	-0.0216
D(LH)	CLK&!SE&SETN&!SI	0.0100	n/a	n/a	-0.0274
D(LH)	CLK&SE&SETN&!SI	0.0100	n/a	n/a	-0.0312
D(LH)	CLK&!SE&SETN&SI	0.0100	n/a	n/a	-0.0272
D(LH)	CLK&SE&SETN&SI	0.0100	n/a	n/a	-0.0108
D(LH)	!CLK&!SE&SETN&!SI	0.0100	n/a	n/a	0.2777
D(LH)	!CLK&SE&SETN&!SI	0.0100	n/a	n/a	-0.0288
D(LH)	!CLK&!SE&SETN&SI	0.0100	n/a	n/a	0.2777
D(LH)	!CLK&SE&SETN&SI	0.0100	n/a	n/a	-0.0103
SETN(LH)	!CLK&!D&!SE&!SI	0.0100	n/a	n/a	0.0358
SETN(LH)	!CLK&!D&!SE&SI	0.0100	n/a	n/a	0.0358
SETN(LH)	!CLK&!D&SE&!SI	0.0100	n/a	n/a	0.0358
SETN(LH)	!CLK&!D&SE&SI	0.0100	n/a	n/a	-0.0481
SETN(LH)	!CLK&D&!SE&!SI	0.0100	n/a	n/a	-0.0481
SETN(LH)	!CLK&D&!SE&SI	0.0100	n/a	n/a	-0.0481

continues on next page

Table 299 – continued from previous page

SETN(LH)	!CLK&D&SE&!SI	0.0100	n/a	n/a	0.0358
SETN(LH)	!CLK&D&SE&SI	0.0100	n/a	n/a	-0.0481
SETN(LH)	CLK&!D&!SE&!SI	0.0100	n/a	n/a	-0.0481
SETN(LH)	CLK&!D&!SE&SI	0.0100	n/a	n/a	-0.0481
SETN(LH)	CLK&!D&SE&!SI	0.0100	n/a	n/a	-0.0481
SETN(LH)	CLK&!D&SE&SI	0.0100	n/a	n/a	-0.0481
SETN(LH)	CLK&D&!SE&!SI	0.0100	n/a	n/a	-0.0481
SETN(LH)	CLK&D&!SE&SI	0.0100	n/a	n/a	-0.0481
SETN(LH)	CLK&D&SE&!SI	0.0100	n/a	n/a	-0.0481
SETN(LH)	CLK&D&SE&SI	0.0100	n/a	n/a	-0.0481

LEAKAGE POWER

When Condition	Power (nW)
!CLK&!D&!SE&!SETN&!SI	0.4423
!CLK&!D&!SE&!SETN&SI	0.4425
!CLK&!D&SE&!SETN&!SI	0.4824
!CLK&!D&SE&!SETN&SI	0.5091
!CLK&D&!SE&!SETN&!SI	0.4375
!CLK&D&!SE&!SETN&SI	0.4375
!CLK&D&SE&!SETN&!SI	0.5219
!CLK&D&SE&!SETN&SI	0.4737
CLK&!D&!SE&!SETN&!SI	0.4186
CLK&!D&!SE&!SETN&SI	0.4186
CLK&!D&SE&!SETN&!SI	0.4195
CLK&!D&SE&!SETN&SI	0.4194
CLK&D&!SE&!SETN&!SI	0.4185
CLK&D&!SE&!SETN&SI	0.4185
CLK&D&SE&!SETN&!SI	0.4195
CLK&D&SE&!SETN&SI	0.4194
CLK&!D&!SE&SETN&!SI	0.5193
CLK&!D&!SE&SETN&SI	0.5193
CLK&!D&SE&SETN&!SI	0.5202
CLK&D&SE&SETN&!SI	0.5202
CLK&!D&SE&SETN&SI	0.6845
CLK&D&!SE&SETN&!SI	0.6486
CLK&D&!SE&SETN&SI	0.6486
CLK&D&SE&SETN&SI	0.6686
!CLK&!D&!SE&SETN&!SI	0.6714
!CLK&!D&!SE&SETN&SI	0.6716
!CLK&!D&SE&SETN&!SI	0.7115
!CLK&!D&SE&SETN&SI	0.7171
!CLK&D&!SE&SETN&!SI	0.6455
!CLK&D&!SE&SETN&SI	0.6455
!CLK&D&SE&SETN&!SI	0.7510
!CLK&D&SE&SETN&SI	0.6818

gf180mcu_fd_sc_mcu9t5v0__sdffsnq_2

gf180mcu_fd_sc_mcu9t5v0__sdffsnq_2 symbol

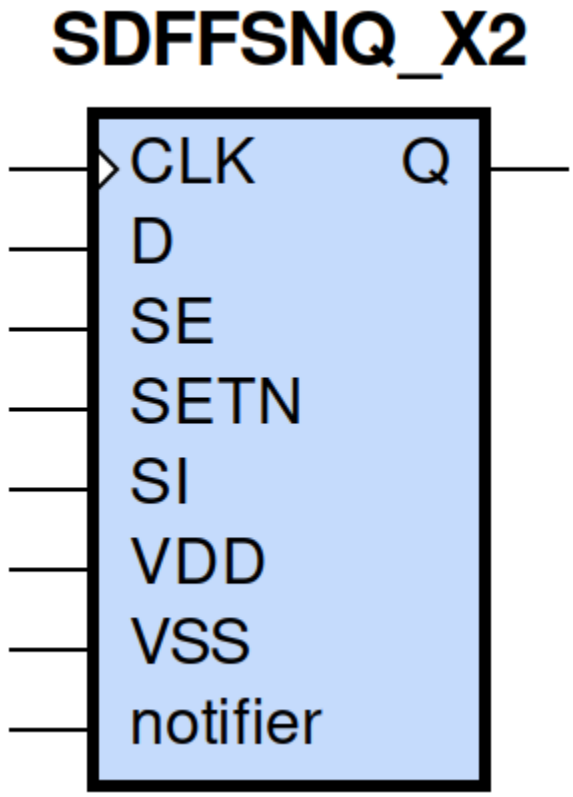

gf180mcu_fd_sc_mcu9t5v0__sdffsnq_2 schematic

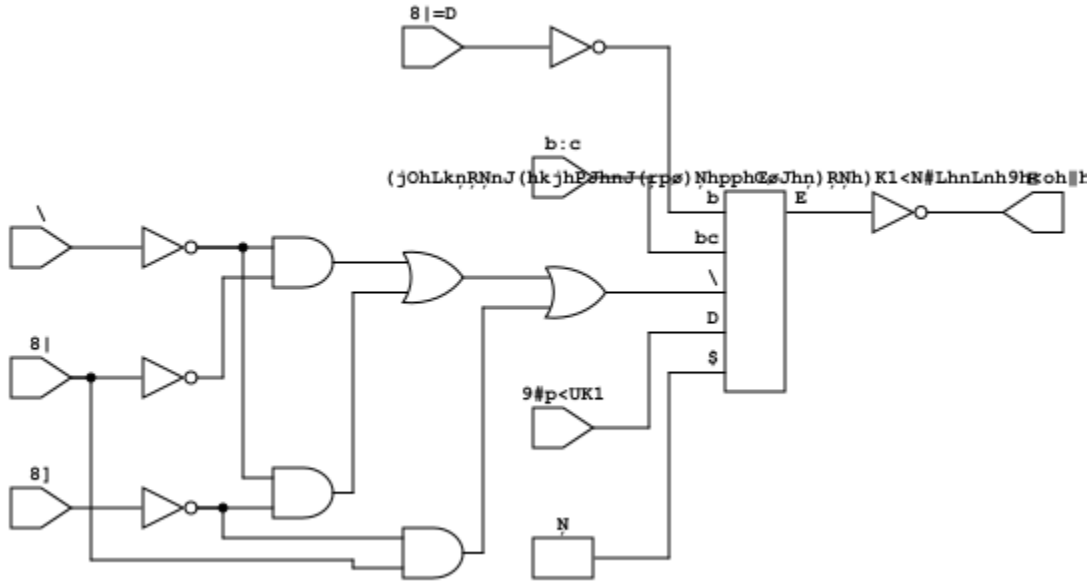

gf180mcu_fd_sc_mcu9t5v0__sdffsnq_2 layout

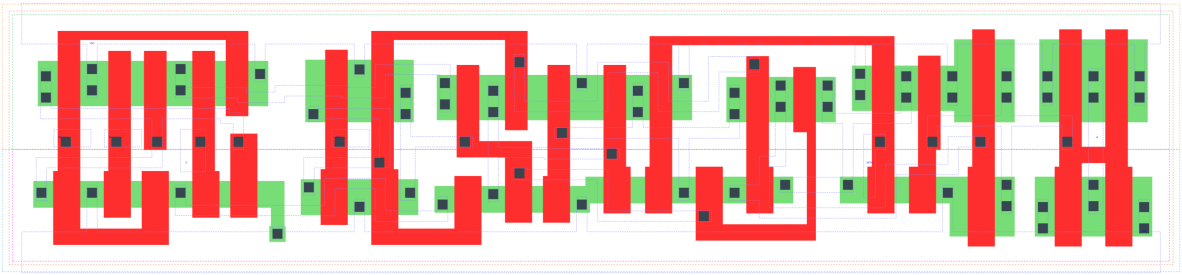

SDFFSNQ_X2 is a positive edge triggered scan D-type flip flop with active low set and 2X drive strength

Attributes

Attribute	Value
area	127.008000 μm^2

TRUTH TABLE

Input					Output
SETN	SE	SI	D	CLK	Q
H	L	X	L	↑	L
H	L	X	H	↑	H
H	H	L	X	↑	L
H	H	H	X	↑	H
L	X	X	X	X	H

FUNCTIONAL SCHEMATIC

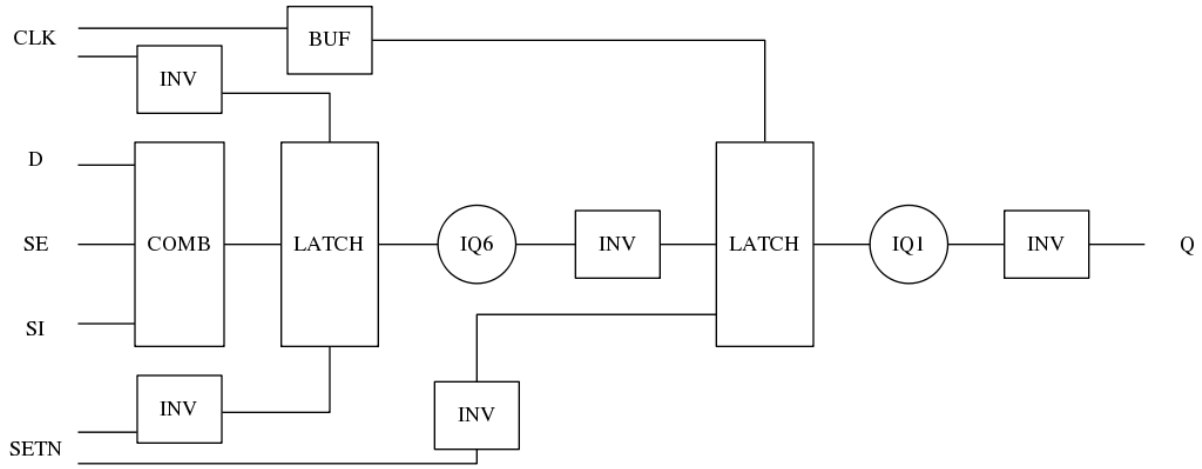

CONSTRAINTS

Constraint Pin	Related Pin	setup(ns)	hold(ns)
SE(LH)	CLK(LH)	0.4640	-0.1770
SE(LH)	CLK(LH)	0.6700	-0.1370
SE(HL)	CLK(LH)	0.5500	-0.0970
SE(HL)	CLK(LH)	0.5500	-0.2750
SI(HL)	CLK(LH)	0.6410	-0.1320
SI(HL)	CLK(LH)	0.6410	-0.1030
SI(LH)	CLK(LH)	0.5100	-0.2230
SI(LH)	CLK(LH)	0.5040	-0.2180
D(HL)	CLK(LH)	0.5440	-0.0800
D(HL)	CLK(LH)	0.5440	-0.0800
D(LH)	CLK(LH)	0.4410	-0.1720
D(LH)	CLK(LH)	0.4410	-0.1720

Constraint Pin	Related Pin	recovery(ns)	removal(ns)
SETN(LH)	CLK(LH)	0.0170	0.1600
SETN(LH)	CLK(LH)	0.0170	0.1600
SETN(LH)	CLK(LH)	0.0170	0.1600
SETN(LH)	CLK(LH)	0.0170	0.1600

Constraint Pin	Related Pin	Minimum Pulse Width(ns)
CLK(HLH)	CLK(HL)	0.6560
CLK(HLH)	CLK(HL)	0.6750
CLK(HLH)	CLK(HL)	0.6560
CLK(HLH)	CLK(HL)	0.6010
CLK(HLH)	CLK(HL)	0.5220
CLK(HLH)	CLK(HL)	0.7360
CLK(HLH)	CLK(HL)	0.5220
CLK(HLH)	CLK(HL)	0.5590
CLK(LHL)	CLK(LH)	0.4070
CLK(LHL)	CLK(LH)	0.4070
CLK(LHL)	CLK(LH)	0.4070
CLK(LHL)	CLK(LH)	0.3580
CLK(LHL)	CLK(LH)	0.3580
CLK(LHL)	CLK(LH)	0.4070
CLK(LHL)	CLK(LH)	0.3580
CLK(LHL)	CLK(LH)	0.3580
SETN(HLH)	SETN(HL)	0.3390
SETN(HLH)	SETN(HL)	0.3390
SETN(HLH)	SETN(HL)	0.3390
SETN(HLH)	SETN(HL)	0.3390
SETN(HLH)	SETN(HL)	0.3490
SETN(HLH)	SETN(HL)	0.3490
SETN(HLH)	SETN(HL)	0.3490
SETN(HLH)	SETN(HL)	0.3490
SETN(HLH)	SETN(HL)	0.3390
SETN(HLH)	SETN(HL)	0.3390
SETN(HLH)	SETN(HL)	0.3390
SETN(HLH)	SETN(HL)	0.3490
SETN(HLH)	SETN(HL)	0.3490
SETN(HLH)	SETN(HL)	0.3490
SETN(HLH)	SETN(HL)	0.3490
SETN(HLH)	SETN(HL)	0.3390

PIN CAPACITANCE (pf)

Pin	Type	Capacitance (pf)
SE	input	0.0084
SI	input	0.0039
D	input	0.0039
CLK	input	0.0050
SETN	input	0.0086

DELAY AND OUTPUT TRANSITION TIME corresponding to min slew and load

Input Pin	Output	When Condition	Tin (ns)	Out Load (pf)	Delay (ns)	Tout (ns)
CLK(LH)	Q(HL)	!D&!SE&SETN&!SI	0.0100	0.0010	0.6098	0.0326
CLK(LH)	Q(HL)	!D&!SE&SETN&SI	0.0100	0.0010	0.6098	0.0326
CLK(LH)	Q(HL)	!D&SE&SETN&!SI	0.0100	0.0010	0.6098	0.0326
CLK(LH)	Q(HL)	D&SE&SETN&!SI	0.0100	0.0010	0.6098	0.0326
CLK(LH)	Q(LH)	!D&SE&SETN&SI	0.0100	0.0010	0.5240	0.0297
CLK(LH)	Q(LH)	D&!SE&SETN&!SI	0.0100	0.0010	0.5240	0.0297
CLK(LH)	Q(LH)	D&!SE&SETN&SI	0.0100	0.0010	0.5240	0.0297
CLK(LH)	Q(LH)	D&SE&SETN&SI	0.0100	0.0010	0.5241	0.0297
SETN(HL)	Q(LH)	!CLK&!D&!SE&!SI	0.0100	0.0010	0.4376	0.0297
SETN(HL)	Q(LH)	!CLK&D&SE&!SI	0.0100	0.0010	0.4376	0.0297
SETN(HL)	Q(LH)	!CLK&D&!SE&SI	0.0100	0.0010	0.4378	0.0297
SETN(HL)	Q(LH)	!CLK&D&SE&SI	0.0100	0.0010	0.4376	0.0297
SETN(HL)	Q(LH)	CLK&D&!SE&!SI	0.0100	0.0010	0.4754	0.0299
SETN(HL)	Q(LH)	CLK&D&SE&!SI	0.0100	0.0010	0.4754	0.0298
SETN(HL)	Q(LH)	CLK&D&!SE&SI	0.0100	0.0010	0.4754	0.0299
SETN(HL)	Q(LH)	CLK&D&SE&SI	0.0100	0.0010	0.4754	0.0299
SETN(HL)	Q(LH)	!CLK&!D&SE&!SI	0.0100	0.0010	0.4376	0.0297
SETN(HL)	Q(LH)	!CLK&!D&!SE&SI	0.0100	0.0010	0.4376	0.0297
SETN(HL)	Q(LH)	!CLK&!D&SE&SI	0.0100	0.0010	0.4376	0.0297
SETN(HL)	Q(LH)	CLK&!D&!SE&!SI	0.0100	0.0010	0.4754	0.0298
SETN(HL)	Q(LH)	CLK&!D&SE&!SI	0.0100	0.0010	0.4754	0.0298
SETN(HL)	Q(LH)	CLK&!D&!SE&SI	0.0100	0.0010	0.4754	0.0298
SETN(HL)	Q(LH)	CLK&!D&SE&SI	0.0100	0.0010	0.4754	0.0299
SETN(HL)	Q(LH)	!CLK&D&!SE&!SI	0.0100	0.0010	0.4378	0.0297

DYNAMIC ENERGY

Input Pin	When Condition	Tin (ns)	Output	Out Load (pf)	Energy (uW/MHz)
CLK	!D&!SE&SETN&!SI	0.0100	Q(HL)	0.0010	1.0579
CLK	!D&!SE&SETN&SI	0.0100	Q(HL)	0.0010	1.0579
CLK	!D&SE&SETN&!SI	0.0100	Q(HL)	0.0010	1.0583
CLK	D&SE&SETN&!SI	0.0100	Q(HL)	0.0010	1.0579
CLK	!D&SE&SETN&SI	0.0100	Q(LH)	0.0010	1.0405
CLK	D&!SE&SETN&!SI	0.0100	Q(LH)	0.0010	1.0405
CLK	D&!SE&SETN&SI	0.0100	Q(LH)	0.0010	1.0405
CLK	D&SE&SETN&SI	0.0100	Q(LH)	0.0010	1.0406
SETN	!CLK&!D&!SE&!SI	0.0100	Q(LH)	0.0010	0.9161
SETN	!CLK&D&SE&!SI	0.0100	Q(LH)	0.0010	0.9160
SETN	!CLK&D&!SE&SI	0.0100	Q(LH)	0.0010	0.7949
SETN	!CLK&D&SE&SI	0.0100	Q(LH)	0.0010	0.7945
SETN	CLK&D&!SE&!SI	0.0100	Q(LH)	0.0010	1.0530
SETN	CLK&D&SE&!SI	0.0100	Q(LH)	0.0010	1.0531
SETN	CLK&D&!SE&SI	0.0100	Q(LH)	0.0010	1.0530
SETN	CLK&D&SE&SI	0.0100	Q(LH)	0.0010	1.0529
SETN	!CLK&!D&SE&!SI	0.0100	Q(LH)	0.0010	0.9160
SETN	!CLK&!D&!SE&SI	0.0100	Q(LH)	0.0010	0.9161

continues on next page

Table 302 – continued from previous page

SETN	!CLK&!D&SE&SI	0.0100	Q(LH)	0.0010	0.7945
SETN	CLK&!D&!SE&!SI	0.0100	Q(LH)	0.0010	1.0531
SETN	CLK&!D&SE&!SI	0.0100	Q(LH)	0.0010	1.0531
SETN	CLK&!D&!SE&SI	0.0100	Q(LH)	0.0010	1.0531
SETN	CLK&!D&SE&SI	0.0100	Q(LH)	0.0010	1.0529
SETN	!CLK&D&!SE&!SI	0.0100	Q(LH)	0.0010	0.7949
SETN(HL)	!CLK&!D&!SE&!SI	0.0100	n/a	n/a	0.1900
SETN(HL)	!CLK&D&SE&!SI	0.0100	n/a	n/a	0.1900
SETN(HL)	!CLK&D&!SE&SI	0.0100	n/a	n/a	0.0708
SETN(HL)	!CLK&D&SE&SI	0.0100	n/a	n/a	0.0708
SETN(HL)	CLK&D&!SE&!SI	0.0100	n/a	n/a	0.0708
SETN(HL)	CLK&D&SE&!SI	0.0100	n/a	n/a	0.0708
SETN(HL)	CLK&D&!SE&SI	0.0100	n/a	n/a	0.0708
SETN(HL)	CLK&D&SE&SI	0.0100	n/a	n/a	0.0708
SETN(HL)	!CLK&!D&SE&!SI	0.0100	n/a	n/a	0.1900
SETN(HL)	!CLK&!D&!SE&SI	0.0100	n/a	n/a	0.1900
SETN(HL)	!CLK&!D&SE&SI	0.0100	n/a	n/a	0.0708
SETN(HL)	CLK&!D&!SE&!SI	0.0100	n/a	n/a	0.0708
SETN(HL)	CLK&!D&SE&!SI	0.0100	n/a	n/a	0.0708
SETN(HL)	CLK&!D&!SE&SI	0.0100	n/a	n/a	0.0708
SETN(HL)	CLK&!D&SE&SI	0.0100	n/a	n/a	0.0709
SETN(HL)	!CLK&D&!SE&!SI	0.0100	n/a	n/a	0.0708
D(HL)	!CLK&!SE&!SETN&!SI	0.0100	n/a	n/a	0.2606
D(HL)	!CLK&!SE&!SETN&SI	0.0100	n/a	n/a	0.2606
D(HL)	!CLK&SE&!SETN&!SI	0.0100	n/a	n/a	0.0329
D(HL)	!CLK&SE&!SETN&SI	0.0100	n/a	n/a	0.0154
D(HL)	CLK&!SE&!SETN&!SI	0.0100	n/a	n/a	0.0337
D(HL)	CLK&!SE&!SETN&SI	0.0100	n/a	n/a	0.0337
D(HL)	CLK&SE&!SETN&!SI	0.0100	n/a	n/a	0.0321
D(HL)	CLK&SE&!SETN&SI	0.0100	n/a	n/a	0.0162
D(HL)	CLK&!SE&SETN&!SI	0.0100	n/a	n/a	0.0658
D(HL)	CLK&SE&SETN&!SI	0.0100	n/a	n/a	0.0321
D(HL)	CLK&!SE&SETN&SI	0.0100	n/a	n/a	0.0658
D(HL)	CLK&SE&SETN&SI	0.0100	n/a	n/a	0.0138
D(HL)	!CLK&!SE&SETN&!SI	0.0100	n/a	n/a	0.3961
D(HL)	!CLK&SE&SETN&!SI	0.0100	n/a	n/a	0.0329
D(HL)	!CLK&!SE&SETN&SI	0.0100	n/a	n/a	0.3961
D(HL)	!CLK&SE&SETN&SI	0.0100	n/a	n/a	0.0154
SE(LH)	!CLK&!D&!SETN&!SI	0.0100	n/a	n/a	0.0030
SE(LH)	!CLK&!D&!SETN&SI	0.0100	n/a	n/a	0.1256
SE(LH)	!CLK&D&!SETN&!SI	0.0100	n/a	n/a	0.2732
SE(LH)	!CLK&D&!SETN&SI	0.0100	n/a	n/a	-0.0111
SE(LH)	CLK&!D&!SETN&!SI	0.0100	n/a	n/a	-0.0000
SE(LH)	CLK&!D&!SETN&SI	0.0100	n/a	n/a	-0.0089
SE(LH)	CLK&D&!SETN&!SI	0.0100	n/a	n/a	0.0025
SE(LH)	CLK&D&!SETN&SI	0.0100	n/a	n/a	-0.0133
SE(LH)	!CLK&D&SETN&!SI	0.0100	n/a	n/a	0.4237
SE(LH)	!CLK&D&SETN&SI	0.0100	n/a	n/a	-0.0111
SE(LH)	CLK&D&SETN&!SI	0.0100	n/a	n/a	0.0371
SE(LH)	CLK&D&SETN&SI	0.0100	n/a	n/a	-0.0148
SE(LH)	!CLK&!D&SETN&!SI	0.0100	n/a	n/a	0.0030
SE(LH)	!CLK&!D&SETN&SI	0.0100	n/a	n/a	0.3017

continues on next page

Table 302 – continued from previous page

SE(LH)	CLK&!D&SETN&!SI	0.0100	n/a	n/a	0.0000
SE(LH)	CLK&!D&SETN&SI	0.0100	n/a	n/a	-0.0089
CLK(LH)	!D&!SE&!SETN&!SI	0.0100	n/a	n/a	0.3857
CLK(LH)	!D&!SE&!SETN&SI	0.0100	n/a	n/a	0.3857
CLK(LH)	!D&SE&!SETN&!SI	0.0100	n/a	n/a	0.3860
CLK(LH)	!D&SE&!SETN&SI	0.0100	n/a	n/a	0.2958
CLK(LH)	D&!SE&!SETN&!SI	0.0100	n/a	n/a	0.2957
CLK(LH)	D&!SE&!SETN&SI	0.0100	n/a	n/a	0.2957
CLK(LH)	D&SE&!SETN&!SI	0.0100	n/a	n/a	0.3857
CLK(LH)	D&SE&!SETN&SI	0.0100	n/a	n/a	0.2958
CLK(LH)	D&!SE&SETN&!SI	0.0100	n/a	n/a	0.2956
CLK(LH)	D&SE&SETN&!SI	0.0100	n/a	n/a	0.2796
CLK(LH)	D&!SE&SETN&SI	0.0100	n/a	n/a	0.2956
CLK(LH)	D&SE&SETN&SI	0.0100	n/a	n/a	0.2958
CLK(LH)	!D&!SE&SETN&!SI	0.0100	n/a	n/a	0.2796
CLK(LH)	!D&SE&SETN&!SI	0.0100	n/a	n/a	0.2796
CLK(LH)	!D&!SE&SETN&SI	0.0100	n/a	n/a	0.2796
CLK(LH)	!D&SE&SETN&SI	0.0100	n/a	n/a	0.2957
SI(LH)	!CLK&!D&!SE&!SETN	0.0100	n/a	n/a	-0.0315
SI(LH)	!CLK&!D&SE&!SETN	0.0100	n/a	n/a	0.1244
SI(LH)	!CLK&D&!SE&!SETN	0.0100	n/a	n/a	-0.0292
SI(LH)	!CLK&D&SE&!SETN	0.0100	n/a	n/a	0.1084
SI(LH)	CLK&!D&!SE&!SETN	0.0100	n/a	n/a	-0.0315
SI(LH)	CLK&!D&SE&!SETN	0.0100	n/a	n/a	-0.0257
SI(LH)	CLK&D&!SE&!SETN	0.0100	n/a	n/a	-0.0302
SI(LH)	CLK&D&SE&!SETN	0.0100	n/a	n/a	-0.0259
SI(LH)	!CLK&D&!SE&SETN	0.0100	n/a	n/a	-0.0292
SI(LH)	!CLK&D&SE&SETN	0.0100	n/a	n/a	0.2835
SI(LH)	CLK&D&!SE&SETN	0.0100	n/a	n/a	-0.0296
SI(LH)	CLK&D&SE&SETN	0.0100	n/a	n/a	-0.0259
SI(LH)	!CLK&!D&!SE&SETN	0.0100	n/a	n/a	-0.0315
SI(LH)	!CLK&!D&SE&SETN	0.0100	n/a	n/a	0.3027
SI(LH)	CLK&!D&!SE&SETN	0.0100	n/a	n/a	-0.0316
SI(LH)	CLK&!D&SE&SETN	0.0100	n/a	n/a	-0.0258
SE(HL)	!CLK&!D&!SETN&!SI	0.0100	n/a	n/a	0.1918
SE(HL)	!CLK&!D&!SETN&SI	0.0100	n/a	n/a	0.4435
SE(HL)	!CLK&D&!SETN&!SI	0.0100	n/a	n/a	0.3216
SE(HL)	!CLK&D&!SETN&SI	0.0100	n/a	n/a	0.1946
SE(HL)	CLK&!D&!SETN&!SI	0.0100	n/a	n/a	0.1911
SE(HL)	CLK&!D&!SETN&SI	0.0100	n/a	n/a	0.1928
SE(HL)	CLK&D&!SETN&!SI	0.0100	n/a	n/a	0.1956
SE(HL)	CLK&D&!SETN&SI	0.0100	n/a	n/a	0.2026
SE(HL)	!CLK&D&SETN&!SI	0.0100	n/a	n/a	0.4913
SE(HL)	!CLK&D&SETN&SI	0.0100	n/a	n/a	0.1945
SE(HL)	CLK&D&SETN&!SI	0.0100	n/a	n/a	0.1976
SE(HL)	CLK&D&SETN&SI	0.0100	n/a	n/a	0.1941
SE(HL)	!CLK&!D&SETN&!SI	0.0100	n/a	n/a	0.1919
SE(HL)	!CLK&!D&SETN&SI	0.0100	n/a	n/a	0.5788
SE(HL)	CLK&!D&SETN&!SI	0.0100	n/a	n/a	0.1911
SE(HL)	CLK&!D&SETN&SI	0.0100	n/a	n/a	0.2493
CLK(HL)	!D&!SE&!SETN&!SI	0.0100	n/a	n/a	0.5933
CLK(HL)	!D&!SE&!SETN&SI	0.0100	n/a	n/a	0.5934

continues on next page

Table 302 – continued from previous page

CLK(HL)	!D&SE&!SETN&!SI	0.0100	n/a	n/a	0.6212
CLK(HL)	!D&SE&!SETN&SI	0.0100	n/a	n/a	0.4652
CLK(HL)	D&!SE&!SETN&!SI	0.0100	n/a	n/a	0.4352
CLK(HL)	D&!SE&!SETN&SI	0.0100	n/a	n/a	0.4352
CLK(HL)	D&SE&!SETN&!SI	0.0100	n/a	n/a	0.6482
CLK(HL)	D&SE&!SETN&SI	0.0100	n/a	n/a	0.4494
CLK(HL)	D&!SE&SETN&!SI	0.0100	n/a	n/a	0.4070
CLK(HL)	D&SE&SETN&!SI	0.0100	n/a	n/a	0.4092
CLK(HL)	D&!SE&SETN&SI	0.0100	n/a	n/a	0.4069
CLK(HL)	D&SE&SETN&SI	0.0100	n/a	n/a	0.4068
CLK(HL)	!D&!SE&SETN&!SI	0.0100	n/a	n/a	0.4090
CLK(HL)	!D&SE&SETN&!SI	0.0100	n/a	n/a	0.4091
CLK(HL)	!D&!SE&SETN&SI	0.0100	n/a	n/a	0.4091
CLK(HL)	!D&SE&SETN&SI	0.0100	n/a	n/a	0.4067
SI(HL)	!CLK&!D&!SE&!SETN	0.0100	n/a	n/a	0.0324
SI(HL)	!CLK&!D&SE&!SETN	0.0100	n/a	n/a	0.3336
SI(HL)	!CLK&D&!SE&!SETN	0.0100	n/a	n/a	0.0320
SI(HL)	!CLK&D&SE&!SETN	0.0100	n/a	n/a	0.3386
SI(HL)	CLK&!D&!SE&!SETN	0.0100	n/a	n/a	0.0320
SI(HL)	CLK&!D&SE&!SETN	0.0100	n/a	n/a	0.0338
SI(HL)	CLK&D&!SE&!SETN	0.0100	n/a	n/a	0.0320
SI(HL)	CLK&D&SE&!SETN	0.0100	n/a	n/a	0.0338
SI(HL)	!CLK&D&!SE&SETN	0.0100	n/a	n/a	0.0320
SI(HL)	!CLK&D&SE&SETN	0.0100	n/a	n/a	0.4891
SI(HL)	CLK&D&!SE&SETN	0.0100	n/a	n/a	0.0321
SI(HL)	CLK&D&SE&SETN	0.0100	n/a	n/a	0.0918
SI(HL)	!CLK&!D&!SE&SETN	0.0100	n/a	n/a	0.0325
SI(HL)	!CLK&!D&SE&SETN	0.0100	n/a	n/a	0.4792
SI(HL)	CLK&!D&!SE&SETN	0.0100	n/a	n/a	0.0320
SI(HL)	CLK&!D&SE&SETN	0.0100	n/a	n/a	0.1151
D(LH)	!CLK&!SE&!SETN&!SI	0.0100	n/a	n/a	0.0976
D(LH)	!CLK&!SE&!SETN&SI	0.0100	n/a	n/a	0.0976
D(LH)	!CLK&SE&!SETN&!SI	0.0100	n/a	n/a	-0.0289
D(LH)	!CLK&SE&!SETN&SI	0.0100	n/a	n/a	-0.0102
D(LH)	CLK&!SE&!SETN&!SI	0.0100	n/a	n/a	-0.0249
D(LH)	CLK&!SE&!SETN&SI	0.0100	n/a	n/a	-0.0247
D(LH)	CLK&SE&!SETN&!SI	0.0100	n/a	n/a	-0.0313
D(LH)	CLK&SE&!SETN&SI	0.0100	n/a	n/a	-0.0213
D(LH)	CLK&!SE&SETN&!SI	0.0100	n/a	n/a	-0.0275
D(LH)	CLK&SE&SETN&!SI	0.0100	n/a	n/a	-0.0312
D(LH)	CLK&!SE&SETN&SI	0.0100	n/a	n/a	-0.0273
D(LH)	CLK&SE&SETN&SI	0.0100	n/a	n/a	-0.0107
D(LH)	!CLK&!SE&SETN&!SI	0.0100	n/a	n/a	0.2670
D(LH)	!CLK&SE&SETN&!SI	0.0100	n/a	n/a	-0.0289
D(LH)	!CLK&!SE&SETN&SI	0.0100	n/a	n/a	0.2670
D(LH)	!CLK&SE&SETN&SI	0.0100	n/a	n/a	-0.0102
SETN(LH)	!CLK&!D&!SE&!SI	0.0100	n/a	n/a	0.0369
SETN(LH)	!CLK&!D&!SE&SI	0.0100	n/a	n/a	0.0369
SETN(LH)	!CLK&!D&SE&!SI	0.0100	n/a	n/a	0.0369
SETN(LH)	!CLK&!D&SE&SI	0.0100	n/a	n/a	-0.0485
SETN(LH)	!CLK&D&!SE&!SI	0.0100	n/a	n/a	-0.0485
SETN(LH)	!CLK&D&!SE&SI	0.0100	n/a	n/a	-0.0485

continues on next page

Table 302 – continued from previous page

SETN(LH)	!CLK&D&SE&!SI	0.0100	n/a	n/a	0.0369
SETN(LH)	!CLK&D&SE&SI	0.0100	n/a	n/a	-0.0485
SETN(LH)	CLK&!D&!SE&!SI	0.0100	n/a	n/a	-0.0485
SETN(LH)	CLK&!D&!SE&SI	0.0100	n/a	n/a	-0.0485
SETN(LH)	CLK&!D&SE&!SI	0.0100	n/a	n/a	-0.0485
SETN(LH)	CLK&!D&SE&SI	0.0100	n/a	n/a	-0.0485
SETN(LH)	CLK&D&!SE&!SI	0.0100	n/a	n/a	-0.0485
SETN(LH)	CLK&D&!SE&SI	0.0100	n/a	n/a	-0.0485
SETN(LH)	CLK&D&SE&!SI	0.0100	n/a	n/a	-0.0485
SETN(LH)	CLK&D&SE&SI	0.0100	n/a	n/a	-0.0485

LEAKAGE POWER

When Condition	Power (nW)
!CLK&!D&!SE&!SETN&!SI	0.4667
!CLK&!D&!SE&!SETN&SI	0.4669
!CLK&!D&SE&!SETN&!SI	0.5070
!CLK&!D&SE&!SETN&SI	0.5347
!CLK&D&!SE&!SETN&!SI	0.4631
!CLK&D&!SE&!SETN&SI	0.4631
!CLK&D&SE&!SETN&!SI	0.5465
!CLK&D&SE&!SETN&SI	0.4993
CLK&!D&!SE&!SETN&!SI	0.4444
CLK&!D&!SE&!SETN&SI	0.4444
CLK&!D&SE&!SETN&!SI	0.4453
CLK&!D&SE&!SETN&SI	0.4465
CLK&D&!SE&!SETN&!SI	0.4455
CLK&D&!SE&!SETN&SI	0.4455
CLK&D&SE&!SETN&!SI	0.4453
CLK&D&SE&!SETN&SI	0.4465
CLK&!D&!SE&SETN&!SI	0.5464
CLK&!D&!SE&SETN&SI	0.5464
CLK&!D&SE&SETN&!SI	0.5473
CLK&D&SE&SETN&!SI	0.5473
CLK&!D&SE&SETN&SI	0.7260
CLK&D&!SE&SETN&!SI	0.6896
CLK&D&!SE&SETN&SI	0.6896
CLK&D&SE&SETN&SI	0.7094
!CLK&!D&!SE&SETN&!SI	0.7022
!CLK&!D&!SE&SETN&SI	0.7024
!CLK&!D&SE&SETN&!SI	0.7425
!CLK&!D&SE&SETN&SI	0.7403
!CLK&D&!SE&SETN&!SI	0.6687
!CLK&D&!SE&SETN&SI	0.6687
!CLK&D&SE&SETN&!SI	0.7820
!CLK&D&SE&SETN&SI	0.7049

gf180mcu_fd_sc_mcu9t5v0__sdffsnq_4

gf180mcu_fd_sc_mcu9t5v0__sdffsnq_4 symbol

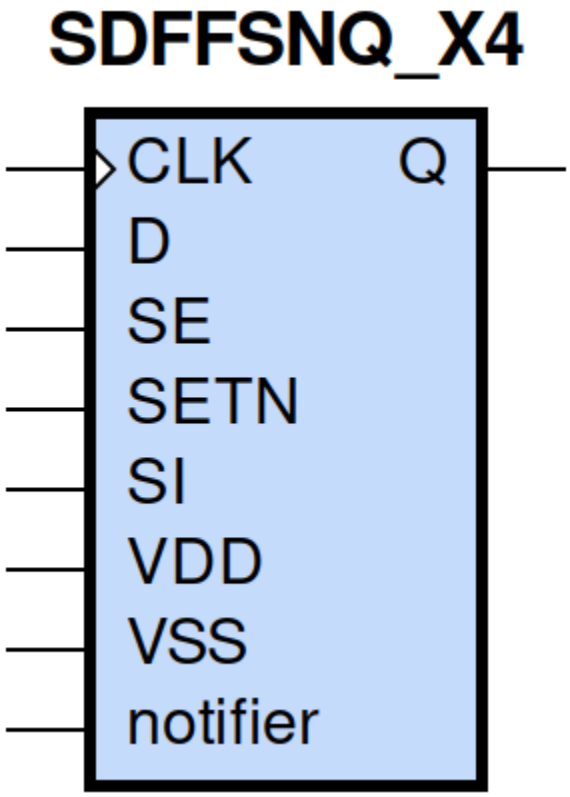

gf180mcu_fd_sc_mcu9t5v0__sdffsnq_4 schematic

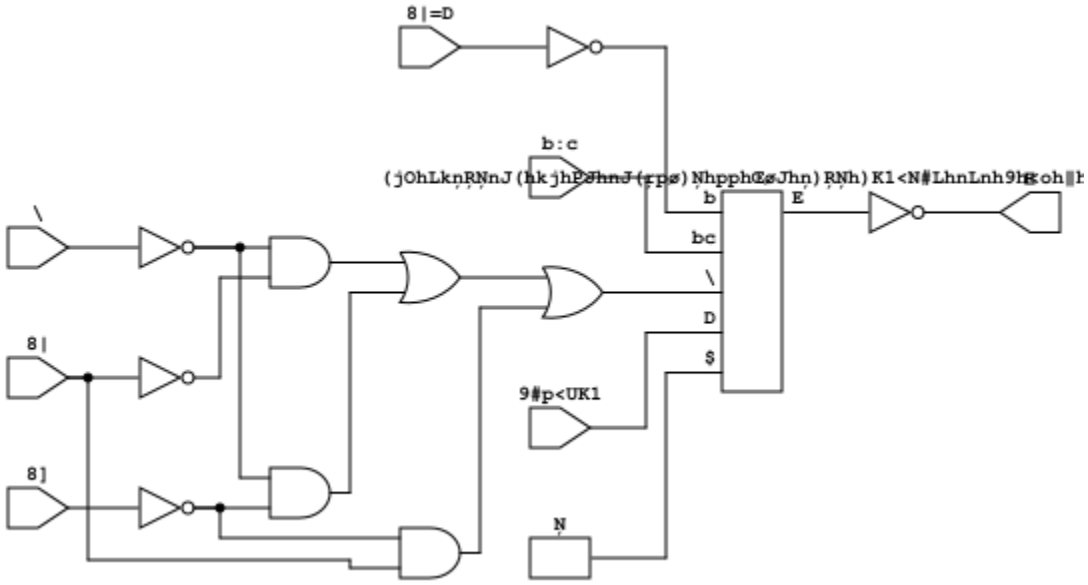

gf180mcu_fd_sc_mcu9t5v0__sdffsnq_4 layout

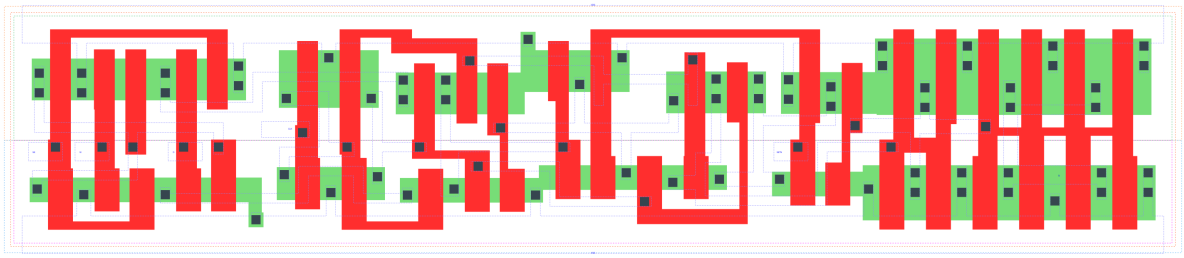

SDFFSNQ_X4 is a positive edge triggered scan D-type flip flop with active low set and 4X drive strength

Attributes

Attribute	Value
area	138.297600 μm^2

TRUTH TABLE

Input					Output
SETN	SE	SI	D	CLK	Q
H	L	X	L	↑	L
H	L	X	H	↑	H
H	H	L	X	↑	L
H	H	H	X	↑	H
L	X	X	X	X	H

FUNCTIONAL SCHEMATIC

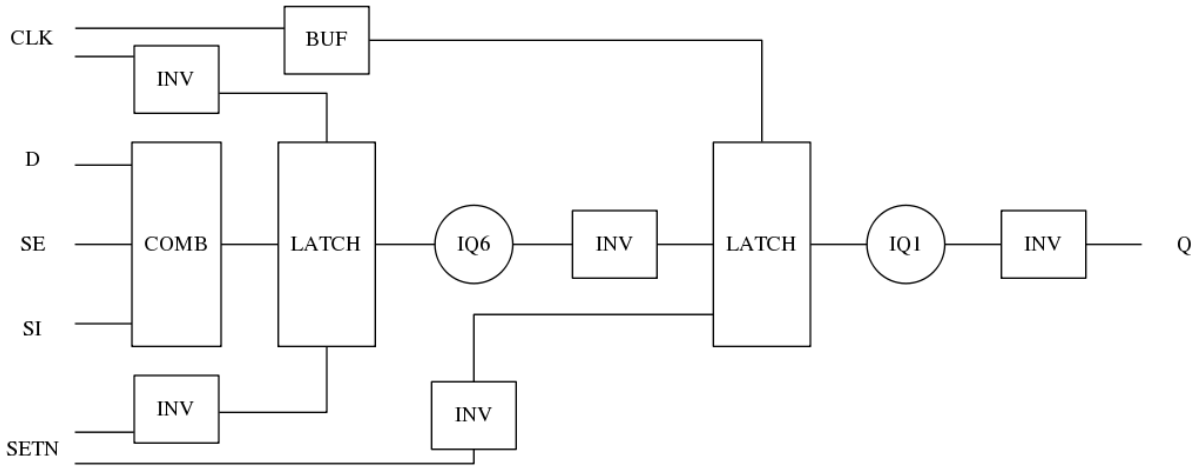

CONSTRAINTS

Constraint Pin	Related Pin	setup(ns)	hold(ns)
SE(LH)	CLK(LH)	0.4690	-0.1660
SE(LH)	CLK(LH)	0.6870	-0.1430
SE(HL)	CLK(LH)	0.5610	-0.0970
SE(HL)	CLK(LH)	0.5440	-0.2690
SI(HL)	CLK(LH)	0.6470	-0.1370
SI(HL)	CLK(LH)	0.6530	-0.1090
SI(LH)	CLK(LH)	0.5150	-0.2120
SI(LH)	CLK(LH)	0.5040	-0.2060
D(HL)	CLK(LH)	0.5500	-0.0860
D(HL)	CLK(LH)	0.5500	-0.0860
D(LH)	CLK(LH)	0.4410	-0.1600
D(LH)	CLK(LH)	0.4410	-0.1600

Constraint Pin	Related Pin	recovery(ns)	removal(ns)
SETN(LH)	CLK(LH)	0.0170	0.1370
SETN(LH)	CLK(LH)	0.0170	0.1370
SETN(LH)	CLK(LH)	0.0170	0.1370
SETN(LH)	CLK(LH)	0.0170	0.1370

Constraint Pin	Related Pin	Minimum Pulse Width(ns)
CLK(HLH)	CLK(HL)	0.6560
CLK(HLH)	CLK(HL)	0.6810
CLK(HLH)	CLK(HL)	0.6560
CLK(HLH)	CLK(HL)	0.5950
CLK(HLH)	CLK(HL)	0.5220
CLK(HLH)	CLK(HL)	0.7420
CLK(HLH)	CLK(HL)	0.5220
CLK(HLH)	CLK(HL)	0.5590
CLK(LHL)	CLK(LH)	0.4660
CLK(LHL)	CLK(LH)	0.4660
CLK(LHL)	CLK(LH)	0.4660
CLK(LHL)	CLK(LH)	0.4170
CLK(LHL)	CLK(LH)	0.4170
CLK(LHL)	CLK(LH)	0.4660
CLK(LHL)	CLK(LH)	0.4170
CLK(LHL)	CLK(LH)	0.4170
SETN(HLH)	SETN(HL)	0.3980
SETN(HLH)	SETN(HL)	0.3980
SETN(HLH)	SETN(HL)	0.3980
SETN(HLH)	SETN(HL)	0.3980
SETN(HLH)	SETN(HL)	0.3980
SETN(HLH)	SETN(HL)	0.3980
SETN(HLH)	SETN(HL)	0.3980
SETN(HLH)	SETN(HL)	0.3980
SETN(HLH)	SETN(HL)	0.3980
SETN(HLH)	SETN(HL)	0.3980
SETN(HLH)	SETN(HL)	0.3980
SETN(HLH)	SETN(HL)	0.3980
SETN(HLH)	SETN(HL)	0.3980
SETN(HLH)	SETN(HL)	0.3980
SETN(HLH)	SETN(HL)	0.3980
SETN(HLH)	SETN(HL)	0.3980

PIN CAPACITANCE (pf)

Pin	Type	Capacitance (pf)
SE	input	0.0084
SI	input	0.0040
D	input	0.0039
CLK	input	0.0051
SETN	input	0.0087

DELAY AND OUTPUT TRANSITION TIME corresponding to min slew and load

Input Pin	Output	When Condition	Tin (ns)	Out Load (pf)	Delay (ns)	Tout (ns)
CLK(LH)	Q(HL)	!D&!SE&SETN&!SI	0.0100	0.0010	0.6838	0.0321
CLK(LH)	Q(HL)	!D&!SE&SETN&SI	0.0100	0.0010	0.6838	0.0321
CLK(LH)	Q(HL)	!D&SE&SETN&!SI	0.0100	0.0010	0.6838	0.0321
CLK(LH)	Q(HL)	D&SE&SETN&!SI	0.0100	0.0010	0.6838	0.0321
CLK(LH)	Q(LH)	!D&SE&SETN&SI	0.0100	0.0010	0.5809	0.0301
CLK(LH)	Q(LH)	D&!SE&SETN&!SI	0.0100	0.0010	0.5808	0.0300
CLK(LH)	Q(LH)	D&!SE&SETN&SI	0.0100	0.0010	0.5809	0.0300
CLK(LH)	Q(LH)	D&SE&SETN&SI	0.0100	0.0010	0.5810	0.0301
SETN(HL)	Q(LH)	!CLK&!D&!SE&!SI	0.0100	0.0010	0.4999	0.0295
SETN(HL)	Q(LH)	!CLK&D&SE&!SI	0.0100	0.0010	0.4998	0.0297
SETN(HL)	Q(LH)	!CLK&D&!SE&SI	0.0100	0.0010	0.5002	0.0297
SETN(HL)	Q(LH)	!CLK&D&SE&SI	0.0100	0.0010	0.5002	0.0296
SETN(HL)	Q(LH)	CLK&D&!SE&!SI	0.0100	0.0010	0.5328	0.0293
SETN(HL)	Q(LH)	CLK&D&SE&!SI	0.0100	0.0010	0.5328	0.0295
SETN(HL)	Q(LH)	CLK&D&!SE&SI	0.0100	0.0010	0.5328	0.0294
SETN(HL)	Q(LH)	CLK&D&SE&SI	0.0100	0.0010	0.5328	0.0294
SETN(HL)	Q(LH)	!CLK&!D&SE&!SI	0.0100	0.0010	0.4999	0.0295
SETN(HL)	Q(LH)	!CLK&!D&!SE&SI	0.0100	0.0010	0.4999	0.0295
SETN(HL)	Q(LH)	!CLK&!D&SE&SI	0.0100	0.0010	0.5002	0.0296
SETN(HL)	Q(LH)	CLK&!D&!SE&!SI	0.0100	0.0010	0.5328	0.0295
SETN(HL)	Q(LH)	CLK&!D&SE&!SI	0.0100	0.0010	0.5328	0.0295
SETN(HL)	Q(LH)	CLK&!D&!SE&SI	0.0100	0.0010	0.5328	0.0295
SETN(HL)	Q(LH)	CLK&!D&SE&SI	0.0100	0.0010	0.5328	0.0294
SETN(HL)	Q(LH)	!CLK&D&!SE&!SI	0.0100	0.0010	0.5002	0.0297

DYNAMIC ENERGY

Input Pin	When Condition	Tin (ns)	Output	Out Load (pf)	Energy (uW/MHz)
CLK	!D&!SE&SETN&!SI	0.0100	Q(HL)	0.0010	1.6857
CLK	!D&!SE&SETN&SI	0.0100	Q(HL)	0.0010	1.6857
CLK	!D&SE&SETN&!SI	0.0100	Q(HL)	0.0010	1.6858
CLK	D&SE&SETN&!SI	0.0100	Q(HL)	0.0010	1.6857
CLK	!D&SE&SETN&SI	0.0100	Q(LH)	0.0010	1.6289
CLK	D&!SE&SETN&!SI	0.0100	Q(LH)	0.0010	1.6287
CLK	D&!SE&SETN&SI	0.0100	Q(LH)	0.0010	1.6290
CLK	D&SE&SETN&SI	0.0100	Q(LH)	0.0010	1.6287
SETN	!CLK&!D&!SE&!SI	0.0100	Q(LH)	0.0010	1.4980
SETN	!CLK&D&SE&!SI	0.0100	Q(LH)	0.0010	1.4977
SETN	!CLK&D&!SE&SI	0.0100	Q(LH)	0.0010	1.3809
SETN	!CLK&D&SE&SI	0.0100	Q(LH)	0.0010	1.3810
SETN	CLK&D&!SE&!SI	0.0100	Q(LH)	0.0010	1.6371
SETN	CLK&D&SE&!SI	0.0100	Q(LH)	0.0010	1.6371
SETN	CLK&D&!SE&SI	0.0100	Q(LH)	0.0010	1.6373
SETN	CLK&D&SE&SI	0.0100	Q(LH)	0.0010	1.6373
SETN	!CLK&!D&SE&!SI	0.0100	Q(LH)	0.0010	1.4979
SETN	!CLK&!D&!SE&SI	0.0100	Q(LH)	0.0010	1.4980

continues on next page

Table 305 – continued from previous page

SETN	!CLK&!D&SE&SI	0.0100	Q(LH)	0.0010	1.3810
SETN	CLK&!D&!SE&!SI	0.0100	Q(LH)	0.0010	1.6371
SETN	CLK&!D&SE&!SI	0.0100	Q(LH)	0.0010	1.6371
SETN	CLK&!D&!SE&SI	0.0100	Q(LH)	0.0010	1.6371
SETN	CLK&!D&SE&SI	0.0100	Q(LH)	0.0010	1.6373
SETN	!CLK&D&!SE&!SI	0.0100	Q(LH)	0.0010	1.3809
SETN(HL)	!CLK&!D&!SE&!SI	0.0100	n/a	n/a	0.1859
SETN(HL)	!CLK&D&SE&!SI	0.0100	n/a	n/a	0.1859
SETN(HL)	!CLK&D&!SE&SI	0.0100	n/a	n/a	0.0708
SETN(HL)	!CLK&D&SE&SI	0.0100	n/a	n/a	0.0708
SETN(HL)	CLK&D&!SE&!SI	0.0100	n/a	n/a	0.0708
SETN(HL)	CLK&D&SE&!SI	0.0100	n/a	n/a	0.0708
SETN(HL)	CLK&D&!SE&SI	0.0100	n/a	n/a	0.0708
SETN(HL)	CLK&D&SE&SI	0.0100	n/a	n/a	0.0708
SETN(HL)	!CLK&!D&SE&!SI	0.0100	n/a	n/a	0.1860
SETN(HL)	!CLK&!D&!SE&SI	0.0100	n/a	n/a	0.1859
SETN(HL)	!CLK&!D&SE&SI	0.0100	n/a	n/a	0.0708
SETN(HL)	CLK&!D&!SE&!SI	0.0100	n/a	n/a	0.0708
SETN(HL)	CLK&!D&SE&!SI	0.0100	n/a	n/a	0.0708
SETN(HL)	CLK&!D&!SE&SI	0.0100	n/a	n/a	0.0708
SETN(HL)	CLK&!D&SE&SI	0.0100	n/a	n/a	0.0708
SETN(HL)	!CLK&D&!SE&!SI	0.0100	n/a	n/a	0.0708
D(HL)	!CLK&!SE&!SETN&!SI	0.0100	n/a	n/a	0.2623
D(HL)	!CLK&!SE&!SETN&SI	0.0100	n/a	n/a	0.2623
D(HL)	!CLK&SE&!SETN&!SI	0.0100	n/a	n/a	0.0330
D(HL)	!CLK&SE&!SETN&SI	0.0100	n/a	n/a	0.0153
D(HL)	CLK&!SE&!SETN&!SI	0.0100	n/a	n/a	0.0322
D(HL)	CLK&!SE&!SETN&SI	0.0100	n/a	n/a	0.0322
D(HL)	CLK&SE&!SETN&!SI	0.0100	n/a	n/a	0.0321
D(HL)	CLK&SE&!SETN&SI	0.0100	n/a	n/a	0.0167
D(HL)	CLK&!SE&SETN&!SI	0.0100	n/a	n/a	0.0644
D(HL)	CLK&SE&SETN&!SI	0.0100	n/a	n/a	0.0321
D(HL)	CLK&!SE&SETN&SI	0.0100	n/a	n/a	0.0644
D(HL)	CLK&SE&SETN&SI	0.0100	n/a	n/a	0.0137
D(HL)	!CLK&!SE&SETN&!SI	0.0100	n/a	n/a	0.3989
D(HL)	!CLK&SE&SETN&!SI	0.0100	n/a	n/a	0.0330
D(HL)	!CLK&!SE&SETN&SI	0.0100	n/a	n/a	0.3989
D(HL)	!CLK&SE&SETN&SI	0.0100	n/a	n/a	0.0153
SE(LH)	!CLK&!D&!SETN&!SI	0.0100	n/a	n/a	0.0032
SE(LH)	!CLK&!D&!SETN&SI	0.0100	n/a	n/a	0.1263
SE(LH)	!CLK&D&!SETN&!SI	0.0100	n/a	n/a	0.2750
SE(LH)	!CLK&D&!SETN&SI	0.0100	n/a	n/a	-0.0117
SE(LH)	CLK&!D&!SETN&!SI	0.0100	n/a	n/a	0.0001
SE(LH)	CLK&!D&!SETN&SI	0.0100	n/a	n/a	-0.0087
SE(LH)	CLK&D&!SETN&!SI	0.0100	n/a	n/a	0.0008
SE(LH)	CLK&D&!SETN&SI	0.0100	n/a	n/a	-0.0127
SE(LH)	!CLK&D&SETN&!SI	0.0100	n/a	n/a	0.4268
SE(LH)	!CLK&D&SETN&SI	0.0100	n/a	n/a	-0.0117
SE(LH)	CLK&D&SETN&!SI	0.0100	n/a	n/a	0.0358
SE(LH)	CLK&D&SETN&SI	0.0100	n/a	n/a	-0.0152
SE(LH)	!CLK&!D&SETN&!SI	0.0100	n/a	n/a	0.0032
SE(LH)	!CLK&!D&SETN&SI	0.0100	n/a	n/a	0.2983

continues on next page

Table 305 – continued from previous page

SE(LH)	CLK&!D&SETN&!SI	0.0100	n/a	n/a	-0.0000
SE(LH)	CLK&!D&SETN&SI	0.0100	n/a	n/a	-0.0087
CLK(LH)	!D&!SE&!SETN&!SI	0.0100	n/a	n/a	0.3772
CLK(LH)	!D&!SE&!SETN&SI	0.0100	n/a	n/a	0.3772
CLK(LH)	!D&SE&!SETN&!SI	0.0100	n/a	n/a	0.3775
CLK(LH)	!D&SE&!SETN&SI	0.0100	n/a	n/a	0.2883
CLK(LH)	D&!SE&!SETN&!SI	0.0100	n/a	n/a	0.2881
CLK(LH)	D&!SE&!SETN&SI	0.0100	n/a	n/a	0.2881
CLK(LH)	D&SE&!SETN&!SI	0.0100	n/a	n/a	0.3772
CLK(LH)	D&SE&!SETN&SI	0.0100	n/a	n/a	0.2883
CLK(LH)	D&!SE&SETN&!SI	0.0100	n/a	n/a	0.2878
CLK(LH)	D&SE&SETN&!SI	0.0100	n/a	n/a	0.2753
CLK(LH)	D&!SE&SETN&SI	0.0100	n/a	n/a	0.2878
CLK(LH)	D&SE&SETN&SI	0.0100	n/a	n/a	0.2883
CLK(LH)	!D&!SE&SETN&!SI	0.0100	n/a	n/a	0.2753
CLK(LH)	!D&SE&SETN&!SI	0.0100	n/a	n/a	0.2755
CLK(LH)	!D&!SE&SETN&SI	0.0100	n/a	n/a	0.2753
CLK(LH)	!D&SE&SETN&SI	0.0100	n/a	n/a	0.2884
SI(LH)	!CLK&!D&!SE&!SETN	0.0100	n/a	n/a	-0.0316
SI(LH)	!CLK&!D&SE&!SETN	0.0100	n/a	n/a	0.1250
SI(LH)	!CLK&D&!SE&!SETN	0.0100	n/a	n/a	-0.0293
SI(LH)	!CLK&D&SE&!SETN	0.0100	n/a	n/a	0.1091
SI(LH)	CLK&!D&!SE&!SETN	0.0100	n/a	n/a	-0.0316
SI(LH)	CLK&!D&SE&!SETN	0.0100	n/a	n/a	-0.0259
SI(LH)	CLK&D&!SE&!SETN	0.0100	n/a	n/a	-0.0304
SI(LH)	CLK&D&SE&!SETN	0.0100	n/a	n/a	-0.0261
SI(LH)	!CLK&D&!SE&SETN	0.0100	n/a	n/a	-0.0293
SI(LH)	!CLK&D&SE&SETN	0.0100	n/a	n/a	0.2798
SI(LH)	CLK&D&!SE&SETN	0.0100	n/a	n/a	-0.0297
SI(LH)	CLK&D&SE&SETN	0.0100	n/a	n/a	-0.0261
SI(LH)	!CLK&!D&!SE&SETN	0.0100	n/a	n/a	-0.0316
SI(LH)	!CLK&!D&SE&SETN	0.0100	n/a	n/a	0.2991
SI(LH)	CLK&!D&!SE&SETN	0.0100	n/a	n/a	-0.0316
SI(LH)	CLK&!D&SE&SETN	0.0100	n/a	n/a	-0.0259
SE(HL)	!CLK&!D&!SETN&!SI	0.0100	n/a	n/a	0.1935
SE(HL)	!CLK&!D&!SETN&SI	0.0100	n/a	n/a	0.4466
SE(HL)	!CLK&D&!SETN&!SI	0.0100	n/a	n/a	0.3245
SE(HL)	!CLK&D&!SETN&SI	0.0100	n/a	n/a	0.1961
SE(HL)	CLK&!D&!SETN&!SI	0.0100	n/a	n/a	0.1926
SE(HL)	CLK&!D&!SETN&SI	0.0100	n/a	n/a	0.1932
SE(HL)	CLK&D&!SETN&!SI	0.0100	n/a	n/a	0.1969
SE(HL)	CLK&D&!SETN&SI	0.0100	n/a	n/a	0.2041
SE(HL)	!CLK&D&SETN&!SI	0.0100	n/a	n/a	0.4901
SE(HL)	!CLK&D&SETN&SI	0.0100	n/a	n/a	0.1959
SE(HL)	CLK&D&SETN&!SI	0.0100	n/a	n/a	0.1990
SE(HL)	CLK&D&SETN&SI	0.0100	n/a	n/a	0.1955
SE(HL)	!CLK&!D&SETN&!SI	0.0100	n/a	n/a	0.1936
SE(HL)	!CLK&!D&SETN&SI	0.0100	n/a	n/a	0.5830
SE(HL)	CLK&!D&SETN&!SI	0.0100	n/a	n/a	0.1926
SE(HL)	CLK&!D&SETN&SI	0.0100	n/a	n/a	0.2493
CLK(HL)	!D&!SE&!SETN&!SI	0.0100	n/a	n/a	0.5859
CLK(HL)	!D&!SE&!SETN&SI	0.0100	n/a	n/a	0.5858

continues on next page

Table 305 – continued from previous page

CLK(HL)	!D&SE&!SETN&!SI	0.0100	n/a	n/a	0.6136
CLK(HL)	!D&SE&!SETN&SI	0.0100	n/a	n/a	0.4581
CLK(HL)	D&!SE&!SETN&!SI	0.0100	n/a	n/a	0.4288
CLK(HL)	D&!SE&!SETN&SI	0.0100	n/a	n/a	0.4286
CLK(HL)	D&SE&!SETN&!SI	0.0100	n/a	n/a	0.6409
CLK(HL)	D&SE&!SETN&SI	0.0100	n/a	n/a	0.4422
CLK(HL)	D&!SE&SETN&!SI	0.0100	n/a	n/a	0.3965
CLK(HL)	D&SE&SETN&!SI	0.0100	n/a	n/a	0.3984
CLK(HL)	D&!SE&SETN&SI	0.0100	n/a	n/a	0.3964
CLK(HL)	D&SE&SETN&SI	0.0100	n/a	n/a	0.3963
CLK(HL)	!D&!SE&SETN&!SI	0.0100	n/a	n/a	0.3986
CLK(HL)	!D&SE&SETN&!SI	0.0100	n/a	n/a	0.3984
CLK(HL)	!D&!SE&SETN&SI	0.0100	n/a	n/a	0.3986
CLK(HL)	!D&SE&SETN&SI	0.0100	n/a	n/a	0.3962
SI(HL)	!CLK&!D&!SE&!SETN	0.0100	n/a	n/a	0.0325
SI(HL)	!CLK&!D&SE&!SETN	0.0100	n/a	n/a	0.3351
SI(HL)	!CLK&D&!SE&!SETN	0.0100	n/a	n/a	0.0321
SI(HL)	!CLK&D&SE&!SETN	0.0100	n/a	n/a	0.3403
SI(HL)	CLK&!D&!SE&!SETN	0.0100	n/a	n/a	0.0321
SI(HL)	CLK&!D&SE&!SETN	0.0100	n/a	n/a	0.0322
SI(HL)	CLK&D&!SE&!SETN	0.0100	n/a	n/a	0.0321
SI(HL)	CLK&D&SE&!SETN	0.0100	n/a	n/a	0.0322
SI(HL)	!CLK&D&!SE&SETN	0.0100	n/a	n/a	0.0320
SI(HL)	!CLK&D&SE&SETN	0.0100	n/a	n/a	0.4921
SI(HL)	CLK&D&!SE&SETN	0.0100	n/a	n/a	0.0321
SI(HL)	CLK&D&SE&SETN	0.0100	n/a	n/a	0.0902
SI(HL)	!CLK&!D&!SE&SETN	0.0100	n/a	n/a	0.0325
SI(HL)	!CLK&!D&SE&SETN	0.0100	n/a	n/a	0.4819
SI(HL)	CLK&!D&!SE&SETN	0.0100	n/a	n/a	0.0321
SI(HL)	CLK&!D&SE&SETN	0.0100	n/a	n/a	0.1135
D(LH)	!CLK&!SE&!SETN&!SI	0.0100	n/a	n/a	0.0989
D(LH)	!CLK&!SE&!SETN&SI	0.0100	n/a	n/a	0.0989
D(LH)	!CLK&SE&!SETN&!SI	0.0100	n/a	n/a	-0.0286
D(LH)	!CLK&SE&!SETN&SI	0.0100	n/a	n/a	-0.0103
D(LH)	CLK&!SE&!SETN&!SI	0.0100	n/a	n/a	-0.0252
D(LH)	CLK&!SE&!SETN&SI	0.0100	n/a	n/a	-0.0250
D(LH)	CLK&SE&!SETN&!SI	0.0100	n/a	n/a	-0.0313
D(LH)	CLK&SE&!SETN&SI	0.0100	n/a	n/a	-0.0217
D(LH)	CLK&!SE&SETN&!SI	0.0100	n/a	n/a	-0.0277
D(LH)	CLK&SE&SETN&!SI	0.0100	n/a	n/a	-0.0313
D(LH)	CLK&!SE&SETN&SI	0.0100	n/a	n/a	-0.0274
D(LH)	CLK&SE&SETN&SI	0.0100	n/a	n/a	-0.0108
D(LH)	!CLK&!SE&SETN&!SI	0.0100	n/a	n/a	0.2642
D(LH)	!CLK&SE&SETN&!SI	0.0100	n/a	n/a	-0.0286
D(LH)	!CLK&!SE&SETN&SI	0.0100	n/a	n/a	0.2643
D(LH)	!CLK&SE&SETN&SI	0.0100	n/a	n/a	-0.0103
SETN(LH)	!CLK&!D&!SE&!SI	0.0100	n/a	n/a	0.0357
SETN(LH)	!CLK&!D&!SE&SI	0.0100	n/a	n/a	0.0357
SETN(LH)	!CLK&!D&SE&!SI	0.0100	n/a	n/a	0.0357
SETN(LH)	!CLK&!D&SE&SI	0.0100	n/a	n/a	-0.0507
SETN(LH)	!CLK&D&!SE&!SI	0.0100	n/a	n/a	-0.0507
SETN(LH)	!CLK&D&!SE&SI	0.0100	n/a	n/a	-0.0507

continues on next page

Table 305 – continued from previous page

SETN(LH)	!CLK&D&SE&!SI	0.0100	n/a	n/a	0.0357
SETN(LH)	!CLK&D&SE&SI	0.0100	n/a	n/a	-0.0507
SETN(LH)	CLK&!D&!SE&!SI	0.0100	n/a	n/a	-0.0507
SETN(LH)	CLK&!D&!SE&SI	0.0100	n/a	n/a	-0.0507
SETN(LH)	CLK&!D&SE&!SI	0.0100	n/a	n/a	-0.0507
SETN(LH)	CLK&!D&SE&SI	0.0100	n/a	n/a	-0.0507
SETN(LH)	CLK&D&!SE&!SI	0.0100	n/a	n/a	-0.0507
SETN(LH)	CLK&D&!SE&SI	0.0100	n/a	n/a	-0.0507
SETN(LH)	CLK&D&SE&!SI	0.0100	n/a	n/a	-0.0507
SETN(LH)	CLK&D&SE&SI	0.0100	n/a	n/a	-0.0507

LEAKAGE POWER

When Condition	Power (nW)
!CLK&!D&!SE&!SETN&!SI	0.5455
!CLK&!D&!SE&!SETN&SI	0.5456
!CLK&!D&SE&!SETN&!SI	0.5856
!CLK&!D&SE&!SETN&SI	0.6129
!CLK&D&!SE&!SETN&!SI	0.5413
!CLK&D&!SE&!SETN&SI	0.5413
!CLK&D&SE&!SETN&!SI	0.6251
!CLK&D&SE&!SETN&SI	0.5775
CLK&!D&!SE&!SETN&!SI	0.5224
CLK&!D&!SE&!SETN&SI	0.5224
CLK&!D&SE&!SETN&!SI	0.5233
CLK&!D&SE&!SETN&SI	0.5234
CLK&D&!SE&!SETN&!SI	0.5225
CLK&D&!SE&!SETN&SI	0.5225
CLK&D&SE&!SETN&!SI	0.5233
CLK&D&SE&!SETN&SI	0.5234
CLK&!D&!SE&SETN&!SI	0.6257
CLK&!D&!SE&SETN&SI	0.6257
CLK&!D&SE&SETN&!SI	0.6266
CLK&D&SE&SETN&!SI	0.6266
CLK&!D&SE&SETN&SI	0.7835
CLK&D&!SE&SETN&!SI	0.7478
CLK&D&!SE&SETN&SI	0.7478
CLK&D&SE&SETN&SI	0.7674
!CLK&!D&!SE&SETN&!SI	0.7749
!CLK&!D&!SE&SETN&SI	0.7750
!CLK&!D&SE&SETN&!SI	0.8151
!CLK&!D&SE&SETN&SI	0.8072
!CLK&D&!SE&SETN&!SI	0.7355
!CLK&D&!SE&SETN&SI	0.7355
!CLK&D&SE&SETN&!SI	0.8545
!CLK&D&SE&SETN&SI	0.7717

gf180mcu_fd_sc_mcu9t5v0__tieh

gf180mcu_fd_sc_mcu9t5v0__tieh symbol

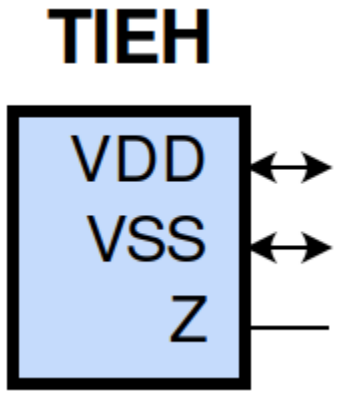

gf180mcu_fd_sc_mcu9t5v0__tieh schematic

gf180mcu_fd_sc_mcu9t5v0__tieh layout

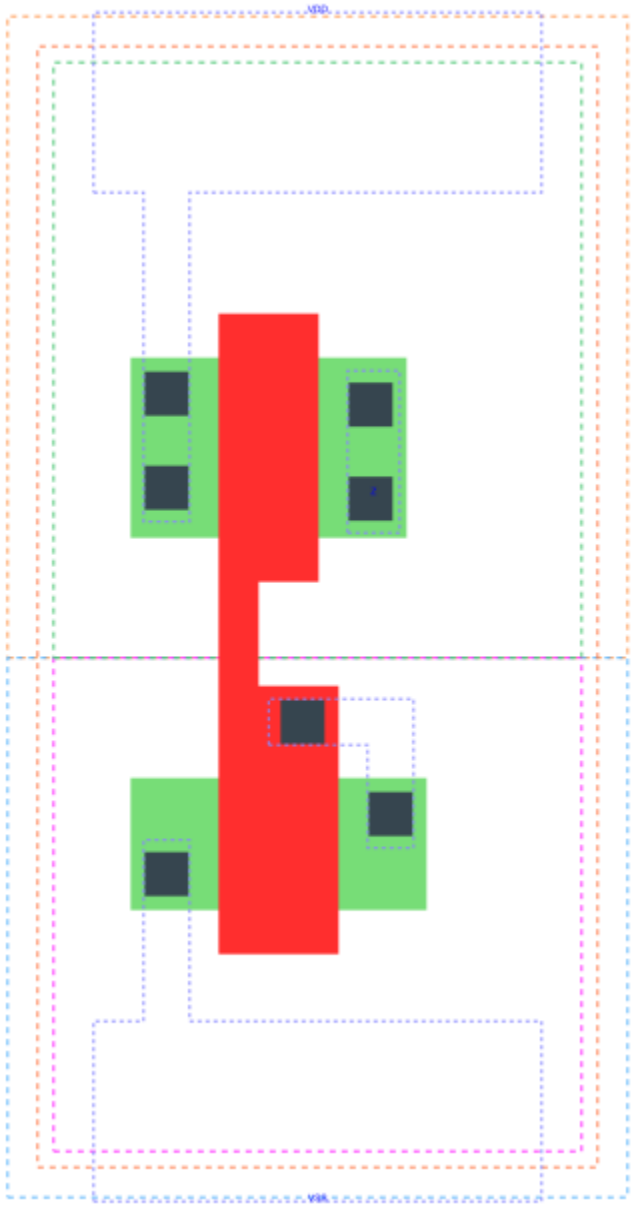

TIEH is a high Level generator

Attributes

Attribute	Value
area	11.289600 μm^2

OUTPUT FUNCTIONS

Output Pin	Function
Z	1

TRUTH TABLE FOR Z

Z

FUNCTIONAL SCHEMATIC

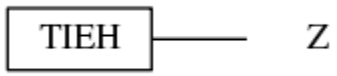

LEAKAGE POWER

When Condition	Power (nW)
default	0.0500

gf180mcu_fd_sc_mcu9t5v0__tiel

gf180mcu_fd_sc_mcu9t5v0__tiel symbol

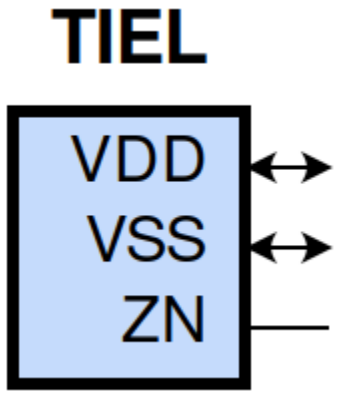

gf180mcu_fd_sc_mcu9t5v0__tiel schematic

gf180mcu_fd_sc_mcu9t5v0__tiel layout

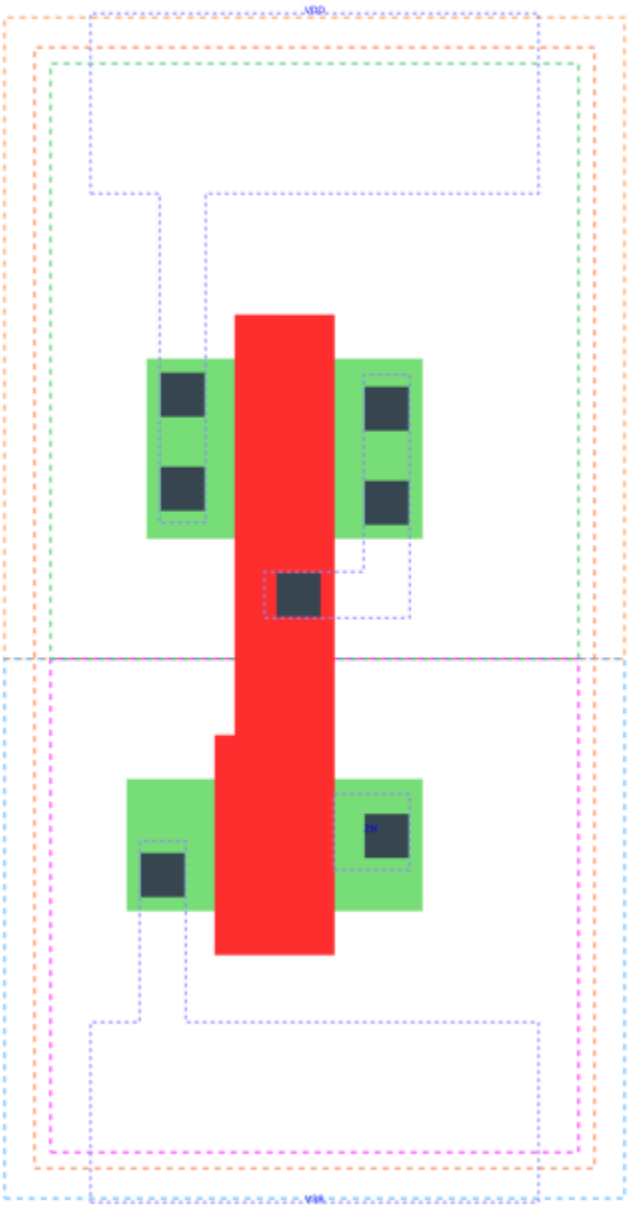

TIEL is a low Level generator

Attributes

Attribute	Value
area	11.289600 μm^2

OUTPUT FUNCTIONS

Output Pin	Function
ZN	0

TRUTH TABLE FOR ZN

ZN

FUNCTIONAL SCHEMATIC

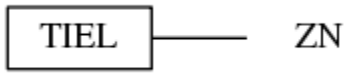

LEAKAGE POWER

When Condition	Power (nW)
default	0.0500

gf180mcu_fd_sc_mcu9t5v0__xnor2_1

gf180mcu_fd_sc_mcu9t5v0__xnor2_1 symbol

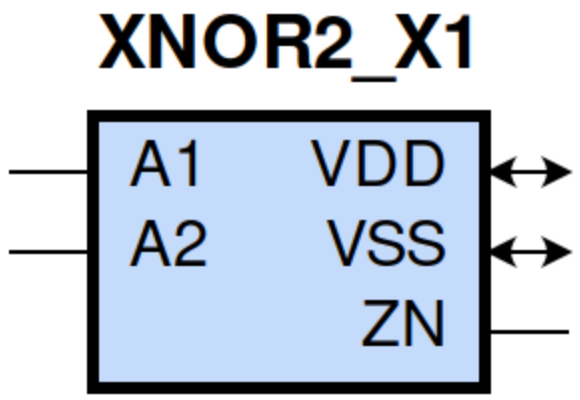

gf180mcu_fd_sc_mcu9t5v0__xnor2_1 schematic

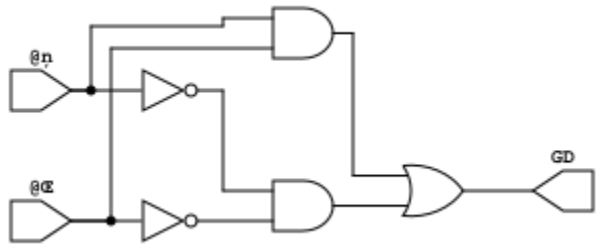

gf180mcu_fd_sc_mcu9t5v0__xnor2_1 layout

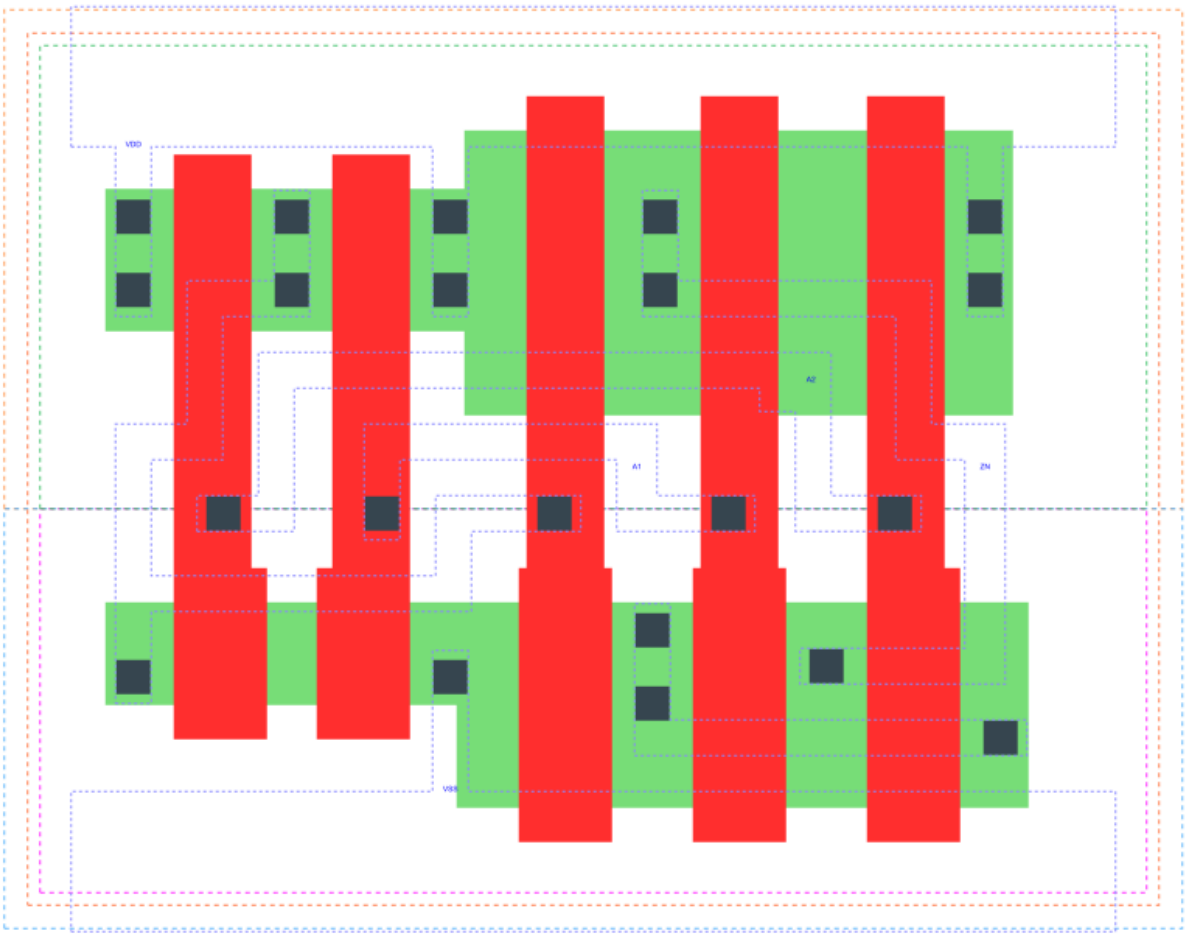

XNOR2_X1 is a 2-input exclusive NOR with 1X drive strength

Attributes

Attribute	Value
area	33.868800 μm^2

OUTPUT FUNCTIONS

Output Pin	Function
ZN	(!(A1^A2))

TRUTH TABLE FOR ZN

A1	A2	ZN
1	1	1
0	0	1
1	0	0
0	1	0

FUNCTIONAL SCHEMATIC

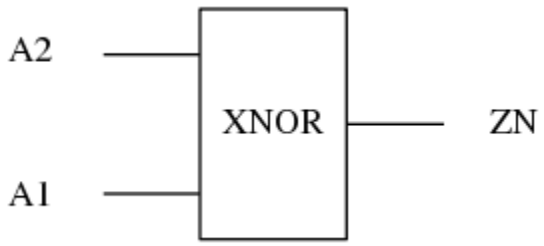

PIN CAPACITANCE (pf)

Pin	Type	Capacitance (pf)
A2	input	0.0105
A1	input	0.0108

DELAY AND OUTPUT TRANSITION TIME corresponding to min slew and load

Input Pin	Output	When Condition	Tin (ns)	Out Load (pf)	Delay (ns)	Tout (ns)
A2(LH)	ZN(LH)	A1	0.0100	0.0010	0.2582	0.0811
A2(HL)	ZN(LH)	!A1	0.0100	0.0010	0.1238	0.0738
A2(HL)	ZN(HL)	A1	0.0100	0.0010	0.2158	0.0465
A2(LH)	ZN(HL)	!A1	0.0100	0.0010	0.0745	0.0478
A1(HL)	ZN(LH)	!A2	0.0100	0.0010	0.1000	0.0733
A1(HL)	ZN(HL)	A2	0.0100	0.0010	0.2573	0.0603
A1(LH)	ZN(HL)	!A2	0.0100	0.0010	0.0558	0.0320
A1(LH)	ZN(LH)	A2	0.0100	0.0010	0.2704	0.0812

DYNAMIC ENERGY

Input Pin	When Condition	Tin (ns)	Output	Out Load (pf)	Energy (uW/MHz)
A2	A1	0.0100	ZN(LH)	0.0010	0.2794
A2	!A1	0.0100	ZN(LH)	0.0010	0.2461
A1	!A2	0.0100	ZN(LH)	0.0010	0.2015
A1	A2	0.0100	ZN(LH)	0.0010	0.3174
A1	A2	0.0100	ZN(HL)	0.0010	0.3922
A1	!A2	0.0100	ZN(HL)	0.0010	-0.0137
A2	A1	0.0100	ZN(HL)	0.0010	0.3320
A2	!A1	0.0100	ZN(HL)	0.0010	0.0277

LEAKAGE POWER

When Condition	Power (nW)
!A1&!A2	0.1264
A1&A2	0.2131
!A1&A2	0.2046
A1&!A2	0.1292

gf180mcu_fd_sc_mcu9t5v0__xnor2_2

gf180mcu_fd_sc_mcu9t5v0__xnor2_2 symbol

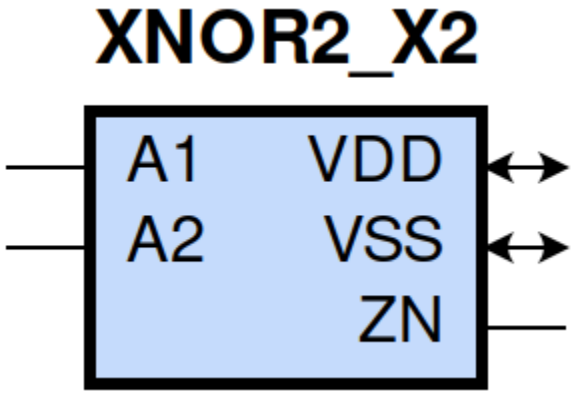

gf180mcu_fd_sc_mcu9t5v0__xnor2_2 schematic

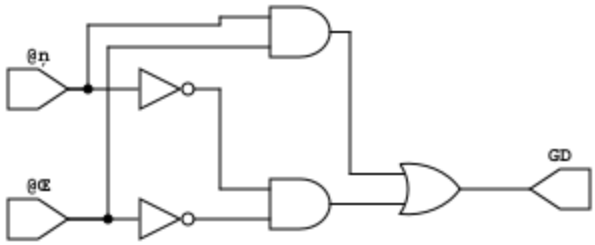

gf180mcu_fd_sc_mcu9t5v0__xnor2_2 layout

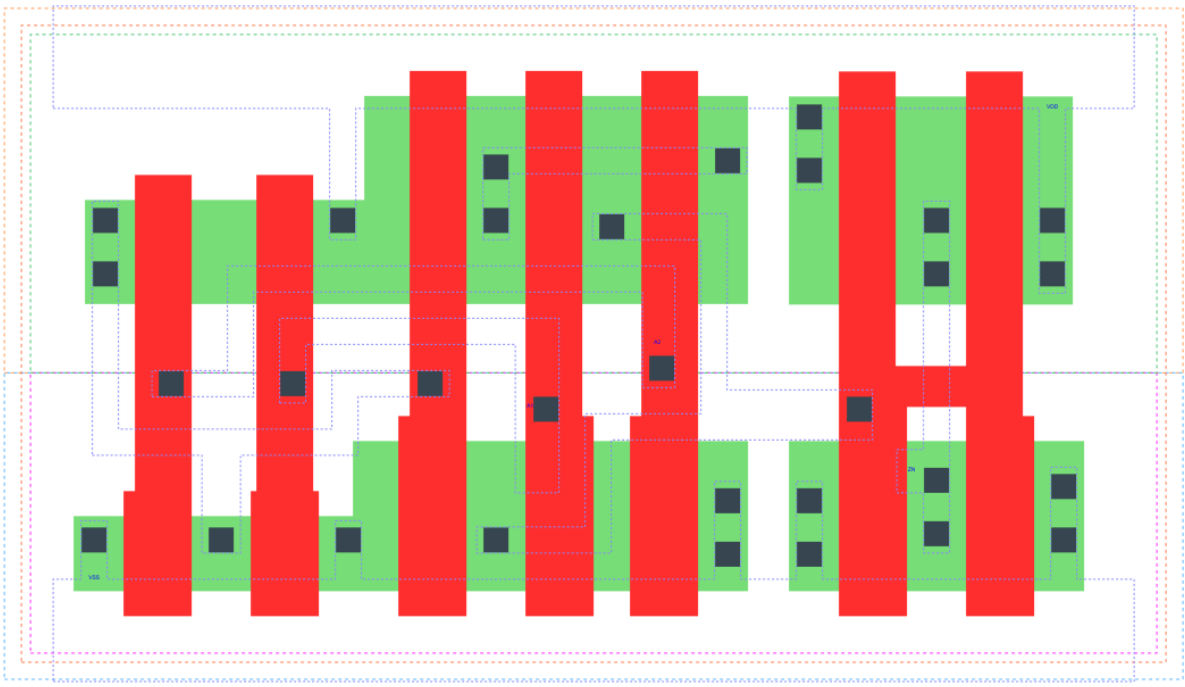

XNOR2_X2 is a 2-input exclusive NOR with 2X drive strength

Attributes

Attribute	Value
area	47.980800 μm^2

OUTPUT FUNCTIONS

Output Pin	Function
ZN	(!(A1^A2))

TRUTH TABLE FOR ZN

A1	A2	ZN
1	1	1
0	0	1
1	0	0
0	1	0

FUNCTIONAL SCHEMATIC

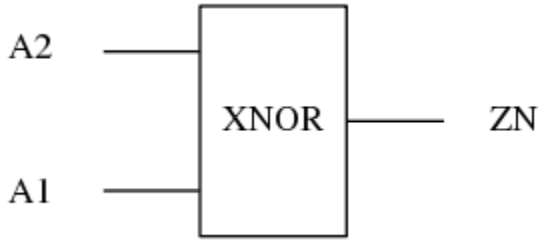

PIN CAPACITANCE (pf)

Pin	Type	Capacitance (pf)
A2	input	0.0104
A1	input	0.0109

DELAY AND OUTPUT TRANSITION TIME corresponding to min slew and load

Input Pin	Output	When Condition	Tin (ns)	Out Load (pf)	Delay (ns)	Tout (ns)
A2(LH)	ZN(LH)	A1	0.0100	0.0010	0.1864	0.0302
A2(HL)	ZN(LH)	!A1	0.0100	0.0010	0.4467	0.0290
A2(HL)	ZN(HL)	A1	0.0100	0.0010	0.2629	0.0439
A2(LH)	ZN(HL)	!A1	0.0100	0.0010	0.3533	0.0397
A1(HL)	ZN(LH)	!A2	0.0100	0.0010	0.4732	0.0290
A1(HL)	ZN(HL)	A2	0.0100	0.0010	0.2343	0.0394
A1(LH)	ZN(HL)	!A2	0.0100	0.0010	0.4021	0.0442
A1(LH)	ZN(LH)	A2	0.0100	0.0010	0.1750	0.0304

DYNAMIC ENERGY

Input Pin	When Condition	Tin (ns)	Output	Out Load (pf)	Energy (uW/MHz)
A2	A1	0.0100	ZN(LH)	0.0010	0.2842
A2	!A1	0.0100	ZN(LH)	0.0010	0.7026
A1	!A2	0.0100	ZN(LH)	0.0010	0.7293
A1	A2	0.0100	ZN(LH)	0.0010	0.2679
A1	A2	0.0100	ZN(HL)	0.0010	0.6228
A1	!A2	0.0100	ZN(HL)	0.0010	0.7419
A2	A1	0.0100	ZN(HL)	0.0010	0.7029
A2	!A1	0.0100	ZN(HL)	0.0010	0.6297

LEAKAGE POWER

When Condition	Power (nW)
!A1&!A2	0.2575
A1&A2	0.1812
!A1&A2	0.1812
A1&!A2	0.2567

gf180mcu_fd_sc_mcu9t5v0__xnor2_4

gf180mcu_fd_sc_mcu9t5v0__xnor2_4 symbol

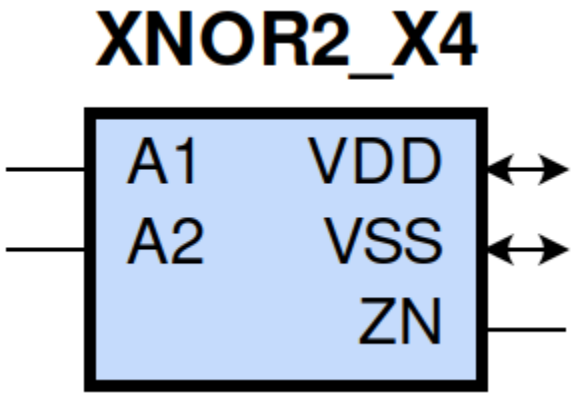

gf180mcu_fd_sc_mcu9t5v0__xnor2_4 schematic

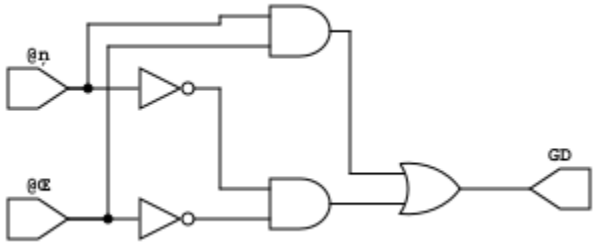

gf180mcu_fd_sc_mcu9t5v0__xnor2_4 layout

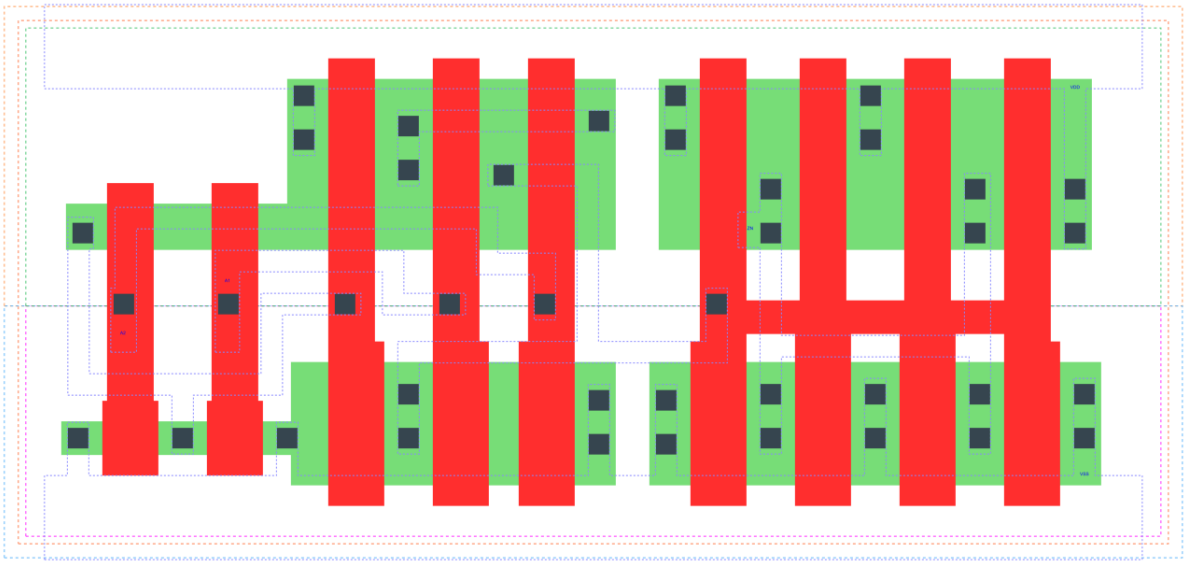

XNOR2_X4 is a 2-input exclusive NOR with 4X drive strength

Attributes

Attribute	Value
area	59.270400 μm^2

OUTPUT FUNCTIONS

Output Pin	Function
ZN	(!(A1^A2))

TRUTH TABLE FOR ZN

A1	A2	ZN
1	1	1
0	0	1
1	0	0
0	1	0

FUNCTIONAL SCHEMATIC

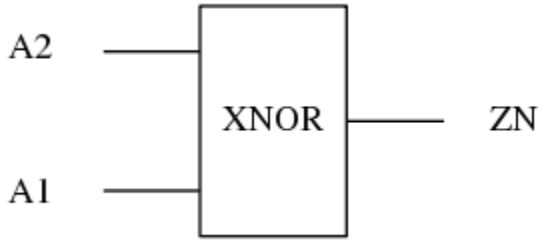

PIN CAPACITANCE (pf)

Pin	Type	Capacitance (pf)
A2	input	0.0094
A1	input	0.0096

DELAY AND OUTPUT TRANSITION TIME corresponding to min slew and load

Input Pin	Output	When Condition	Tin (ns)	Out Load (pf)	Delay (ns)	Tout (ns)
A2(LH)	ZN(LH)	A1	0.0100	0.0010	0.2620	0.0383
A2(HL)	ZN(LH)	!A1	0.0100	0.0010	0.6781	0.0377
A2(HL)	ZN(HL)	A1	0.0100	0.0010	0.3721	0.0612
A2(LH)	ZN(HL)	!A1	0.0100	0.0010	0.5056	0.0573
A1(HL)	ZN(LH)	!A2	0.0100	0.0010	0.7074	0.0378
A1(HL)	ZN(HL)	A2	0.0100	0.0010	0.3454	0.0572
A1(LH)	ZN(HL)	!A2	0.0100	0.0010	0.5534	0.0611
A1(LH)	ZN(LH)	A2	0.0100	0.0010	0.2507	0.0385

DYNAMIC ENERGY

Input Pin	When Condition	Tin (ns)	Output	Out Load (pf)	Energy (uW/MHz)
A2	A1	0.0100	ZN(LH)	0.0010	0.7285
A2	!A1	0.0100	ZN(LH)	0.0010	1.1941
A1	!A2	0.0100	ZN(LH)	0.0010	1.2091
A1	A2	0.0100	ZN(LH)	0.0010	0.7198
A1	A2	0.0100	ZN(HL)	0.0010	1.3303
A1	!A2	0.0100	ZN(HL)	0.0010	1.4941
A2	A1	0.0100	ZN(HL)	0.0010	1.4496
A2	!A1	0.0100	ZN(HL)	0.0010	1.3539

LEAKAGE POWER

When Condition	Power (nW)
!A1&!A2	0.3129
A1&A2	0.2321
!A1&A2	0.2346
A1&!A2	0.3105

gf180mcu_fd_sc_mcu9t5v0__xnor3_1

gf180mcu_fd_sc_mcu9t5v0__xnor3_1 symbol

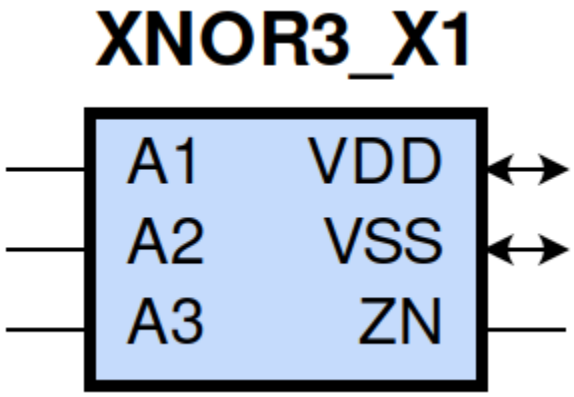

gf180mcu_fd_sc_mcu9t5v0__xnor3_1 schematic

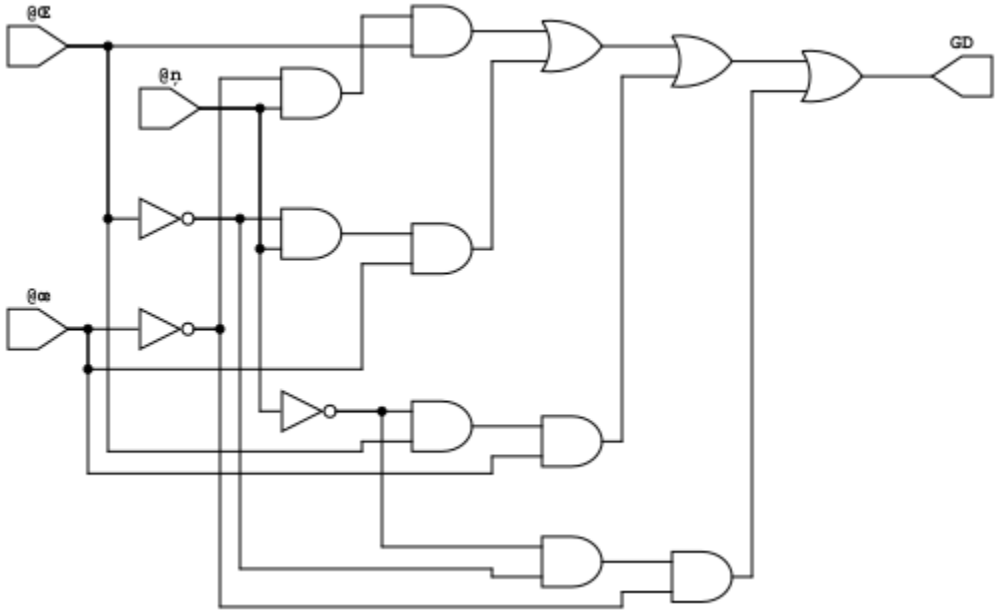

gf180mcu_fd_sc_mcu9t5v0__xnor3_1 layout

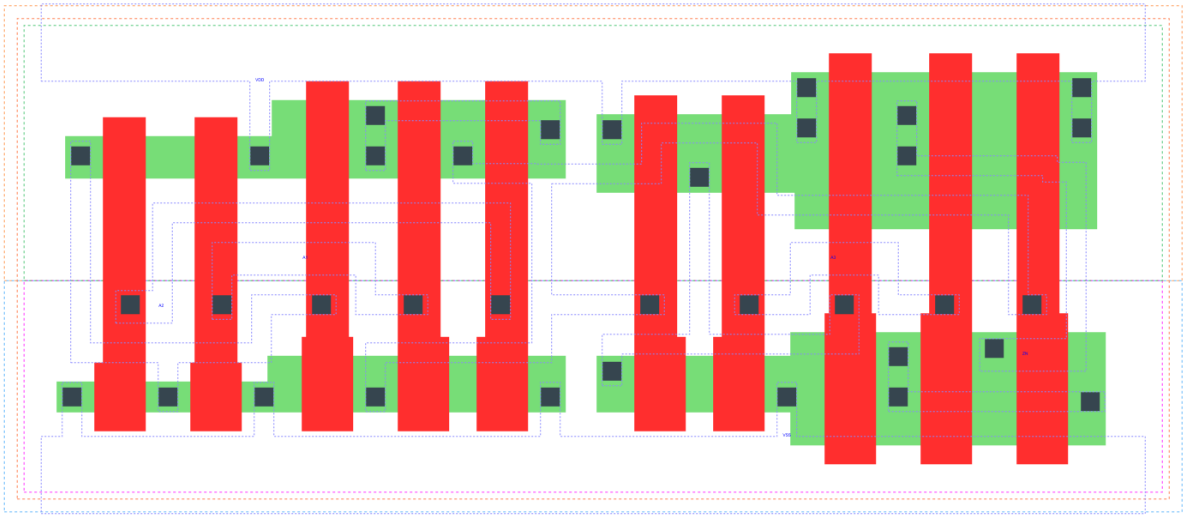

XNOR3_X1 is a 3-input exclusive NOR with 1X drive strength

Attributes

Attribute	Value
area	64.915200 μm^2

OUTPUT FUNCTIONS

Output Pin	Function
ZN	(!(A1^A2^A3))

TRUTH TABLE FOR ZN

A1	A2	A3	ZN
1	1	0	1
1	0	1	1
0	1	1	1
0	0	0	1
1	1	1	0
1	0	0	0
0	1	0	0
0	0	1	0

FUNCTIONAL SCHEMATIC

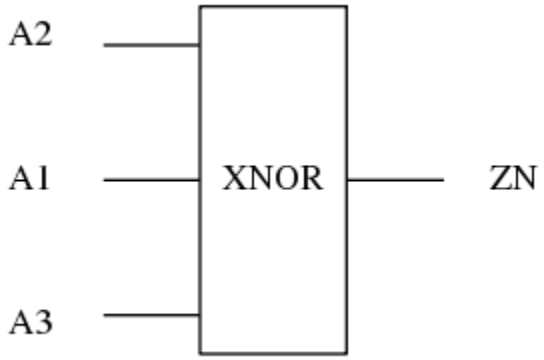

PIN CAPACITANCE (pf)

Pin	Type	Capacitance (pf)
A2	input	0.0068
A1	input	0.0068
A3	input	0.0107

DELAY AND OUTPUT TRANSITION TIME corresponding to min slew and load

Input Pin	Output	When Condition	Tin (ns)	Out Load (pf)	Delay (ns)	Tout (ns)
A2(LH)	ZN(LH)	!A1&A3	0.0100	0.0010	0.7910	0.0797
A2(LH)	ZN(LH)	A1&!A3	0.0100	0.0010	0.3214	0.0864
A2(HL)	ZN(LH)	!A1&!A3	0.0100	0.0010	0.6169	0.0837
A2(HL)	ZN(LH)	A1&A3	0.0100	0.0010	0.6894	0.0800
A2(HL)	ZN(HL)	!A1&A3	0.0100	0.0010	0.7227	0.0474
A2(HL)	ZN(HL)	A1&!A3	0.0100	0.0010	0.4579	0.1061
A2(LH)	ZN(HL)	!A1&!A3	0.0100	0.0010	0.5647	0.0995
A2(LH)	ZN(HL)	A1&A3	0.0100	0.0010	0.4300	0.0483
A1(HL)	ZN(LH)	!A2&!A3	0.0100	0.0010	0.6457	0.0837
A1(HL)	ZN(LH)	A2&A3	0.0100	0.0010	0.6525	0.0797
A1(HL)	ZN(HL)	!A2&A3	0.0100	0.0010	0.7516	0.0475
A1(HL)	ZN(HL)	A2&!A3	0.0100	0.0010	0.4261	0.0995
A1(LH)	ZN(HL)	!A2&!A3	0.0100	0.0010	0.6141	0.1061
A1(LH)	ZN(HL)	A2&A3	0.0100	0.0010	0.4188	0.0483
A1(LH)	ZN(LH)	!A2&A3	0.0100	0.0010	0.8454	0.0797
A1(LH)	ZN(LH)	A2&!A3	0.0100	0.0010	0.3099	0.0864
A3(LH)	ZN(HL)	!A1&!A2	0.0100	0.0010	0.0564	0.0325
A3(LH)	ZN(HL)	A1&A2	0.0100	0.0010	0.0564	0.0325
A3(HL)	ZN(HL)	!A1&A2	0.0100	0.0010	0.2520	0.0602
A3(HL)	ZN(HL)	A1&!A2	0.0100	0.0010	0.2520	0.0602
A3(LH)	ZN(LH)	!A1&A2	0.0100	0.0010	0.2665	0.0814
A3(LH)	ZN(LH)	A1&!A2	0.0100	0.0010	0.2665	0.0814
A3(HL)	ZN(LH)	!A1&!A2	0.0100	0.0010	0.1009	0.0743
A3(HL)	ZN(LH)	A1&A2	0.0100	0.0010	0.1008	0.0741

DYNAMIC ENERGY

Input Pin	When Condition	Tin (ns)	Output	Out Load (pf)	Energy (uW/MHz)
A2	!A1&A3	0.0100	ZN(LH)	0.0010	0.6598
A2	A1&!A3	0.0100	ZN(LH)	0.0010	0.2573
A2	!A1&!A3	0.0100	ZN(LH)	0.0010	0.4968
A2	A1&A3	0.0100	ZN(LH)	0.0010	0.6812
A1	!A2&!A3	0.0100	ZN(LH)	0.0010	0.5113
A1	A2&A3	0.0100	ZN(LH)	0.0010	0.6481
A1	!A2&A3	0.0100	ZN(LH)	0.0010	0.7089
A1	A2&!A3	0.0100	ZN(LH)	0.0010	0.2485
A1	!A2&A3	0.0100	ZN(HL)	0.0010	0.5876
A1	A2&!A3	0.0100	ZN(HL)	0.0010	0.4602
A1	!A2&!A3	0.0100	ZN(HL)	0.0010	0.5258
A1	A2&A3	0.0100	ZN(HL)	0.0010	0.3268
A3	!A1&!A2	0.0100	ZN(HL)	0.0010	-0.0119
A3	A1&A2	0.0100	ZN(HL)	0.0010	-0.0119
A3	!A1&A2	0.0100	ZN(HL)	0.0010	0.4047
A3	A1&!A2	0.0100	ZN(HL)	0.0010	0.4047
A2	!A1&A3	0.0100	ZN(HL)	0.0010	0.5730
A2	A1&!A3	0.0100	ZN(HL)	0.0010	0.4978
A2	!A1&!A3	0.0100	ZN(HL)	0.0010	0.4720
A2	A1&A3	0.0100	ZN(HL)	0.0010	0.3354
A3	!A1&A2	0.0100	ZN(LH)	0.0010	0.2972
A3	A1&!A2	0.0100	ZN(LH)	0.0010	0.2972
A3	!A1&!A2	0.0100	ZN(LH)	0.0010	0.2023
A3	A1&A2	0.0100	ZN(LH)	0.0010	0.2023

LEAKAGE POWER

When Condition	Power (nW)
!A1&!A2&!A3	0.2868
!A1&A2&A3	0.2900
A1&!A2&A3	0.3661
A1&A2&!A3	0.2050
!A1&!A2&A3	0.2895
!A1&A2&!A3	0.2816
A1&!A2&!A3	0.3577
A1&A2&A3	0.2078

gf180mcu_fd_sc_mcu9t5v0__xnor3_2

gf180mcu_fd_sc_mcu9t5v0__xnor3_2 symbol

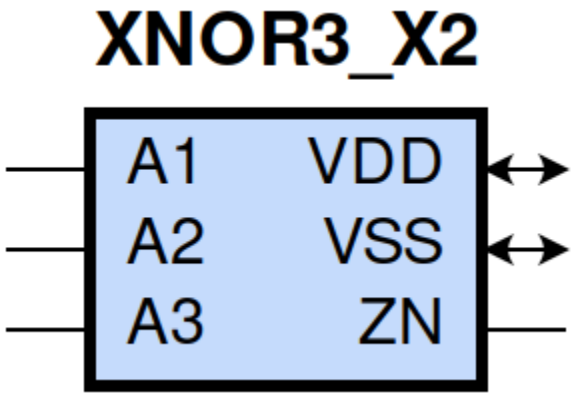

gf180mcu_fd_sc_mcu9t5v0__xnor3_2 schematic

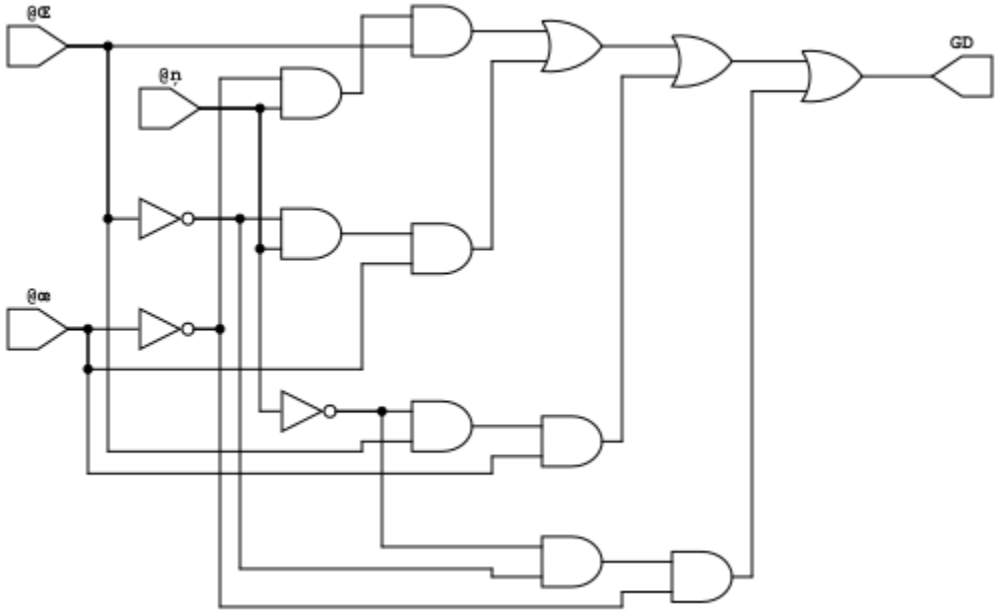

gf180mcu_fd_sc_mcu9t5v0__xnor3_2 layout

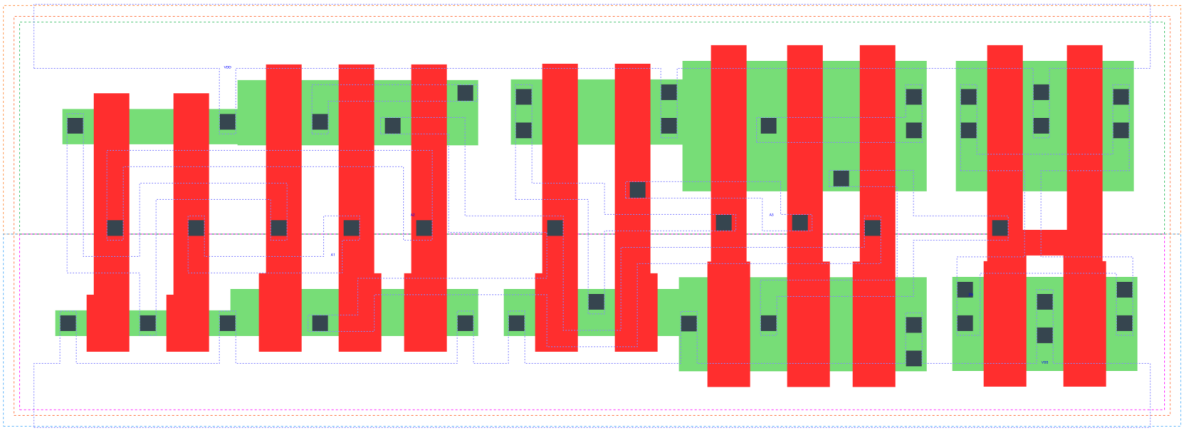

XNOR3_X2 is a 3-input exclusive NOR with 2X drive strength

Attributes

Attribute	Value
area	79.027200 μm^2

OUTPUT FUNCTIONS

Output Pin	Function
ZN	(!(A1^A2^A3))

TRUTH TABLE FOR ZN

A1	A2	A3	ZN
1	1	0	1
1	0	1	1
0	1	1	1
0	0	0	1
1	1	1	0
1	0	0	0
0	1	0	0
0	0	1	0

FUNCTIONAL SCHEMATIC

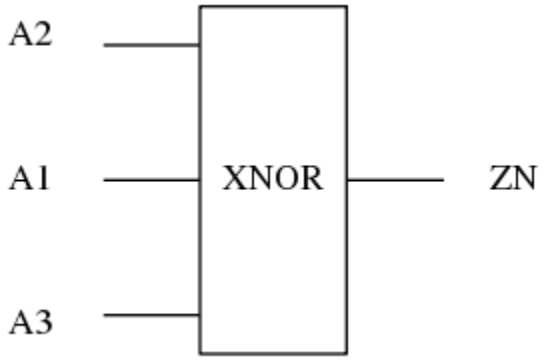

PIN CAPACITANCE (pf)

Pin	Type	Capacitance (pf)
A2	input	0.0068
A1	input	0.0065
A3	input	0.0105

DELAY AND OUTPUT TRANSITION TIME corresponding to min slew and load

Input Pin	Output	When Condition	Tin (ns)	Out Load (pf)	Delay (ns)	Tout (ns)
A2(LH)	ZN(LH)	!A1&A3	0.0100	0.0010	0.6934	0.0420
A2(LH)	ZN(LH)	A1&!A3	0.0100	0.0010	0.7022	0.0358
A2(HL)	ZN(LH)	!A1&!A3	0.0100	0.0010	0.9908	0.0357
A2(HL)	ZN(LH)	A1&A3	0.0100	0.0010	0.5891	0.0423
A2(HL)	ZN(HL)	!A1&A3	0.0100	0.0010	0.7929	0.0512
A2(HL)	ZN(HL)	A1&!A3	0.0100	0.0010	0.7472	0.0462
A2(LH)	ZN(HL)	!A1&!A3	0.0100	0.0010	0.8527	0.0461
A2(LH)	ZN(HL)	A1&A3	0.0100	0.0010	0.5035	0.0517
A1(HL)	ZN(LH)	!A2&!A3	0.0100	0.0010	1.0204	0.0357
A1(HL)	ZN(LH)	A2&A3	0.0100	0.0010	0.5559	0.0418
A1(HL)	ZN(HL)	!A2&A3	0.0100	0.0010	0.8224	0.0512
A1(HL)	ZN(HL)	A2&!A3	0.0100	0.0010	0.7151	0.0461
A1(LH)	ZN(HL)	!A2&!A3	0.0100	0.0010	0.9035	0.0462
A1(LH)	ZN(HL)	A2&A3	0.0100	0.0010	0.4923	0.0519
A1(LH)	ZN(LH)	!A2&A3	0.0100	0.0010	0.7450	0.0425
A1(LH)	ZN(LH)	A2&!A3	0.0100	0.0010	0.6908	0.0358
A3(LH)	ZN(HL)	!A1&!A2	0.0100	0.0010	0.4180	0.0514
A3(LH)	ZN(HL)	A1&A2	0.0100	0.0010	0.4184	0.0515
A3(HL)	ZN(HL)	!A1&A2	0.0100	0.0010	0.2470	0.0461
A3(HL)	ZN(HL)	A1&!A2	0.0100	0.0010	0.2470	0.0461
A3(LH)	ZN(LH)	!A1&A2	0.0100	0.0010	0.1859	0.0373
A3(LH)	ZN(LH)	A1&!A2	0.0100	0.0010	0.1859	0.0373
A3(HL)	ZN(LH)	!A1&!A2	0.0100	0.0010	0.4891	0.0357
A3(HL)	ZN(LH)	A1&A2	0.0100	0.0010	0.4901	0.0358

DYNAMIC ENERGY

Input Pin	When Condition	Tin (ns)	Output	Out Load (pf)	Energy (uW/MHz)
A2	!A1&A3	0.0100	ZN(LH)	0.0010	0.8043
A2	A1&!A3	0.0100	ZN(LH)	0.0010	0.7595
A2	!A1&!A3	0.0100	ZN(LH)	0.0010	0.9958
A2	A1&A3	0.0100	ZN(LH)	0.0010	0.8359
A1	!A2&!A3	0.0100	ZN(LH)	0.0010	1.0106
A1	A2&A3	0.0100	ZN(LH)	0.0010	0.7936
A1	!A2&A3	0.0100	ZN(LH)	0.0010	0.8624
A1	A2&!A3	0.0100	ZN(LH)	0.0010	0.7507
A1	!A2&A3	0.0100	ZN(HL)	0.0010	0.9806
A1	A2&!A3	0.0100	ZN(HL)	0.0010	1.0076
A1	!A2&!A3	0.0100	ZN(HL)	0.0010	1.0668
A1	A2&A3	0.0100	ZN(HL)	0.0010	0.7222
A3	!A1&!A2	0.0100	ZN(HL)	0.0010	0.7487
A3	A1&A2	0.0100	ZN(HL)	0.0010	0.7496
A3	!A1&A2	0.0100	ZN(HL)	0.0010	0.6246
A3	A1&!A2	0.0100	ZN(HL)	0.0010	0.6246
A2	!A1&A3	0.0100	ZN(HL)	0.0010	0.9661
A2	A1&!A3	0.0100	ZN(HL)	0.0010	1.0394
A2	!A1&!A3	0.0100	ZN(HL)	0.0010	1.0177
A2	A1&A3	0.0100	ZN(HL)	0.0010	0.7309
A3	!A1&A2	0.0100	ZN(LH)	0.0010	0.3144
A3	A1&!A2	0.0100	ZN(LH)	0.0010	0.3144
A3	!A1&!A2	0.0100	ZN(LH)	0.0010	0.7778
A3	A1&A2	0.0100	ZN(LH)	0.0010	0.7783

LEAKAGE POWER

When Condition	Power (nW)
!A1&!A2&!A3	0.4179
!A1&A2&A3	0.2581
A1&!A2&A3	0.3342
A1&A2&!A3	0.3362
!A1&!A2&A3	0.4172
!A1&A2&!A3	0.2581
A1&!A2&!A3	0.3342
A1&A2&A3	0.3354

gf180mcu_fd_sc_mcu9t5v0__xnor3_4

gf180mcu_fd_sc_mcu9t5v0__xnor3_4 symbol

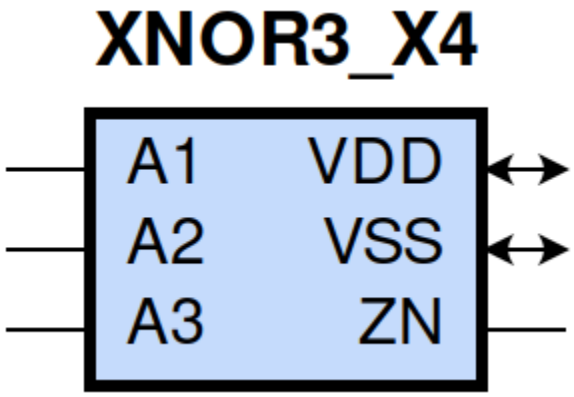

gf180mcu_fd_sc_mcu9t5v0__xnor3_4 schematic

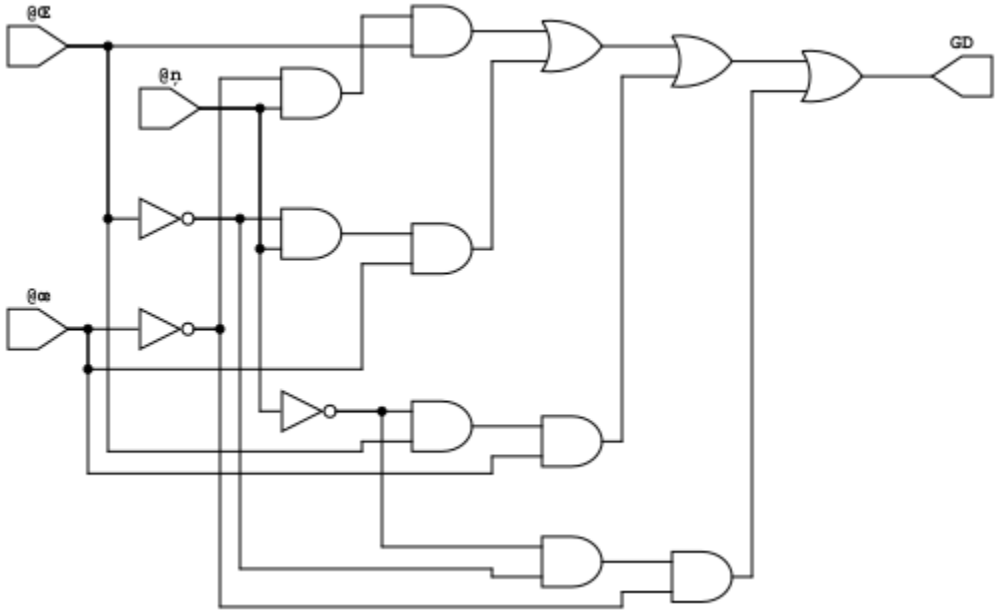

gf180mcu_fd_sc_mcu9t5v0__xnor3_4 layout

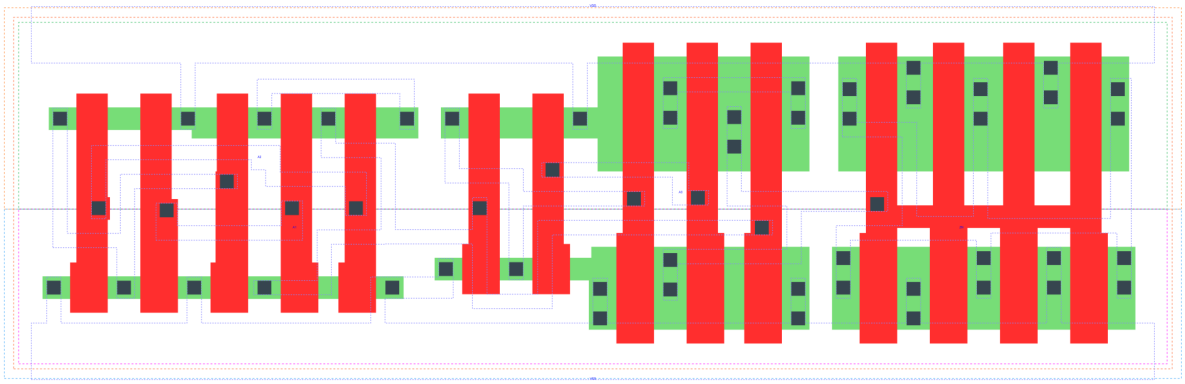

XNOR3_X4 is a 3-input exclusive NOR with 4X drive strength

Attributes

Attribute	Value
area	90.316800 μm^2

OUTPUT FUNCTIONS

Output Pin	Function
ZN	(!(A1^A2^A3))

TRUTH TABLE FOR ZN

A1	A2	A3	ZN
1	1	0	1
1	0	1	1
0	1	1	1
0	0	0	1
1	1	1	0
1	0	0	0
0	1	0	0
0	0	1	0

FUNCTIONAL SCHEMATIC

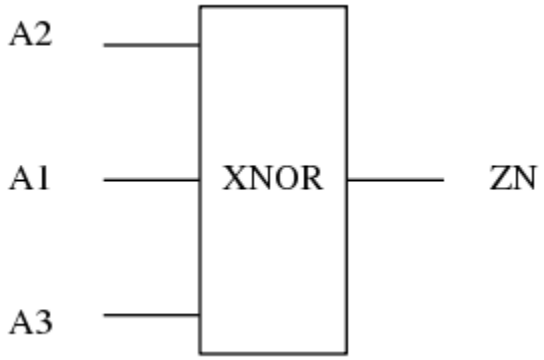

PIN CAPACITANCE (pf)

Pin	Type	Capacitance (pf)
A2	input	0.0053
A1	input	0.0050
A3	input	0.0093

DELAY AND OUTPUT TRANSITION TIME corresponding to min slew and load

Input Pin	Output	When Condition	Tin (ns)	Out Load (pf)	Delay (ns)	Tout (ns)
A2(LH)	ZN(LH)	!A1&A3	0.0100	0.0010	0.9725	0.0497
A2(LH)	ZN(LH)	A1&!A3	0.0100	0.0010	1.0266	0.0418
A2(HL)	ZN(LH)	!A1&!A3	0.0100	0.0010	1.3113	0.0418
A2(HL)	ZN(LH)	A1&A3	0.0100	0.0010	0.8650	0.0504
A2(HL)	ZN(HL)	!A1&A3	0.0100	0.0010	0.9926	0.0667
A2(HL)	ZN(HL)	A1&!A3	0.0100	0.0010	1.0536	0.0623
A2(LH)	ZN(HL)	!A1&!A3	0.0100	0.0010	1.1635	0.0622
A2(LH)	ZN(HL)	A1&A3	0.0100	0.0010	0.7038	0.0675
A1(HL)	ZN(LH)	!A2&!A3	0.0100	0.0010	1.3405	0.0416
A1(HL)	ZN(LH)	A2&A3	0.0100	0.0010	0.8309	0.0499
A1(HL)	ZN(HL)	!A2&A3	0.0100	0.0010	1.0218	0.0667
A1(HL)	ZN(HL)	A2&!A3	0.0100	0.0010	1.0225	0.0621
A1(LH)	ZN(HL)	!A2&!A3	0.0100	0.0010	1.2039	0.0623
A1(LH)	ZN(HL)	A2&A3	0.0100	0.0010	0.6926	0.0674
A1(LH)	ZN(LH)	!A2&A3	0.0100	0.0010	1.0139	0.0508
A1(LH)	ZN(LH)	A2&!A3	0.0100	0.0010	1.0162	0.0416
A3(LH)	ZN(HL)	!A1&!A2	0.0100	0.0010	0.5666	0.0665
A3(LH)	ZN(HL)	A1&A2	0.0100	0.0010	0.5692	0.0669
A3(HL)	ZN(HL)	!A1&A2	0.0100	0.0010	0.3574	0.0621
A3(HL)	ZN(HL)	A1&!A2	0.0100	0.0010	0.3574	0.0621
A3(LH)	ZN(LH)	!A1&A2	0.0100	0.0010	0.2597	0.0431
A3(LH)	ZN(LH)	A1&!A2	0.0100	0.0010	0.2597	0.0431
A3(HL)	ZN(LH)	!A1&!A2	0.0100	0.0010	0.7126	0.0416
A3(HL)	ZN(LH)	A1&A2	0.0100	0.0010	0.7129	0.0417

DYNAMIC ENERGY

Input Pin	When Condition	Tin (ns)	Output	Out Load (pf)	Energy (uW/MHz)
A2	!A1&A3	0.0100	ZN(LH)	0.0010	1.3436
A2	A1&!A3	0.0100	ZN(LH)	0.0010	1.2359
A2	!A1&!A3	0.0100	ZN(LH)	0.0010	1.4026
A2	A1&A3	0.0100	ZN(LH)	0.0010	1.3734
A1	!A2&!A3	0.0100	ZN(LH)	0.0010	1.4134
A1	A2&A3	0.0100	ZN(LH)	0.0010	1.3325
A1	!A2&A3	0.0100	ZN(LH)	0.0010	1.3938
A1	A2&!A3	0.0100	ZN(LH)	0.0010	1.2294
A1	!A2&A3	0.0100	ZN(HL)	0.0010	1.6809
A1	A2&!A3	0.0100	ZN(HL)	0.0010	1.6815
A1	!A2&!A3	0.0100	ZN(HL)	0.0010	1.7213
A1	A2&A3	0.0100	ZN(HL)	0.0010	1.5096
A3	!A1&!A2	0.0100	ZN(HL)	0.0010	1.5150
A3	A1&A2	0.0100	ZN(HL)	0.0010	1.5201
A3	!A1&A2	0.0100	ZN(HL)	0.0010	1.3414
A3	A1&!A2	0.0100	ZN(HL)	0.0010	1.3414
A2	!A1&A3	0.0100	ZN(HL)	0.0010	1.6704
A2	A1&!A3	0.0100	ZN(HL)	0.0010	1.7002
A2	!A1&!A3	0.0100	ZN(HL)	0.0010	1.6928
A2	A1&A3	0.0100	ZN(HL)	0.0010	1.5165
A3	!A1&A2	0.0100	ZN(LH)	0.0010	0.7641
A3	A1&!A2	0.0100	ZN(LH)	0.0010	0.7641
A3	!A1&!A2	0.0100	ZN(LH)	0.0010	1.2396
A3	A1&A2	0.0100	ZN(LH)	0.0010	1.2403

LEAKAGE POWER

When Condition	Power (nW)
!A1&!A2&!A3	0.4735
!A1&A2&A3	0.3132
A1&!A2&A3	0.3897
A1&A2&!A3	0.3910
!A1&!A2&A3	0.4711
!A1&A2&!A3	0.3158
A1&!A2&!A3	0.3922
A1&A2&A3	0.3885

gf180mcu_fd_sc_mcu9t5v0__xor2_1

gf180mcu_fd_sc_mcu9t5v0__xor2_1 symbol

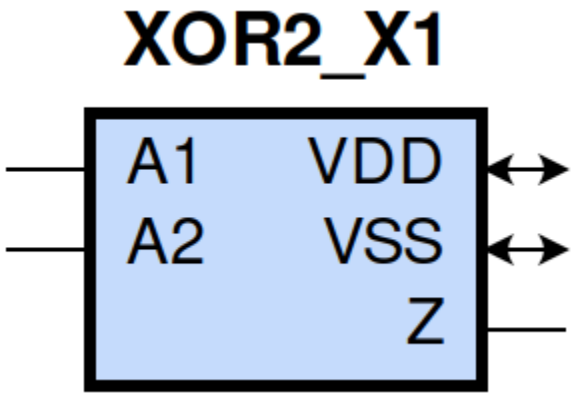

gf180mcu_fd_sc_mcu9t5v0__xor2_1 schematic

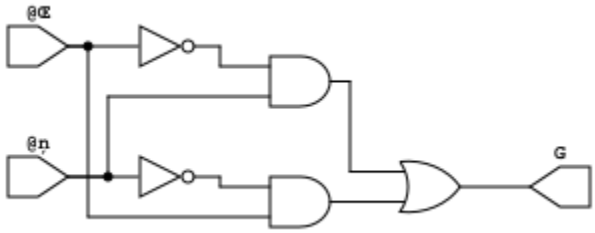

gf180mcu_fd_sc_mcu9t5v0__xor2_1 layout

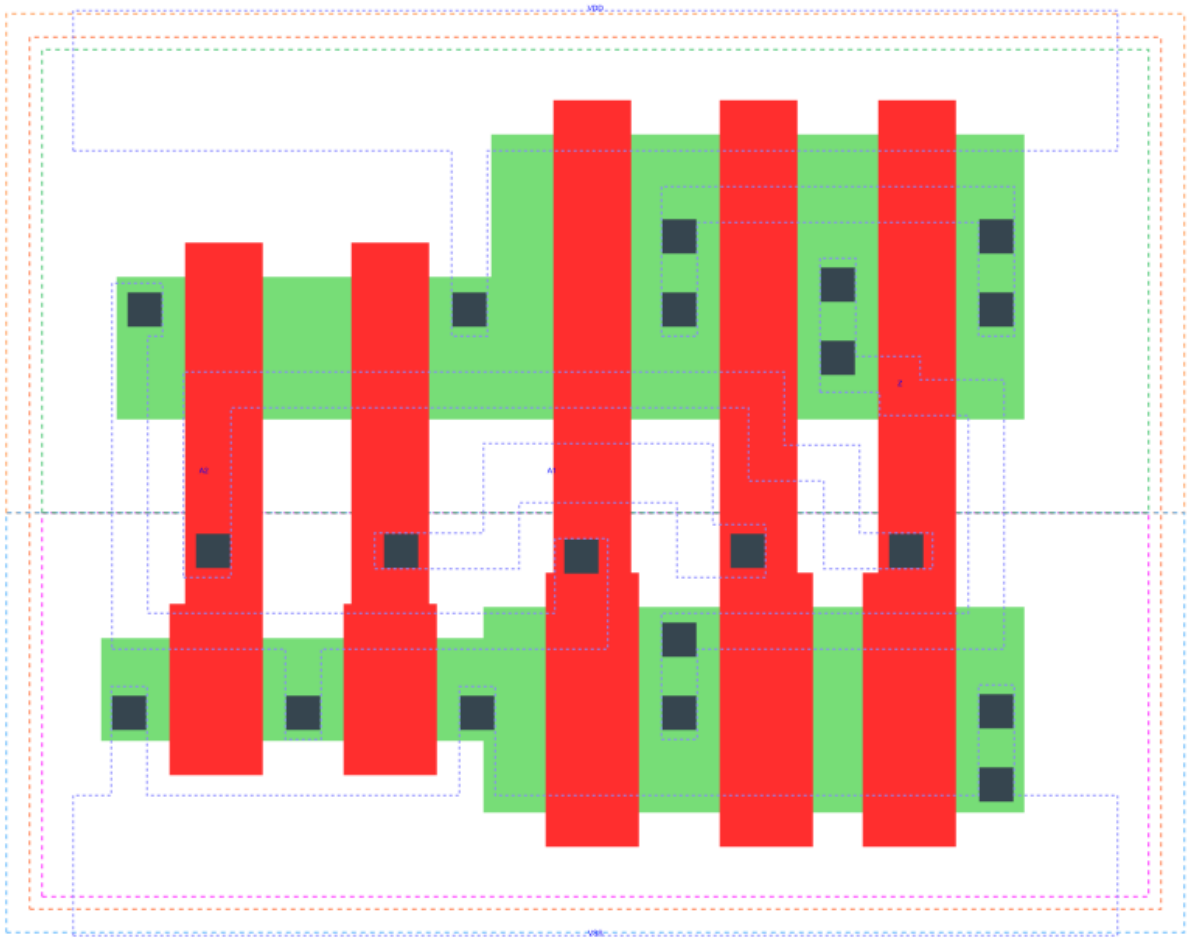

XOR2_X1 is a 2-input exclusive OR with 1X drive strength

Attributes

Attribute	Value
area	33.868800 μm^2

OUTPUT FUNCTIONS

Output Pin	Function
Z	(A1^A2)

TRUTH TABLE FOR Z

A1	A2	Z
1	0	1
0	1	1
1	1	0
0	0	0

FUNCTIONAL SCHEMATIC

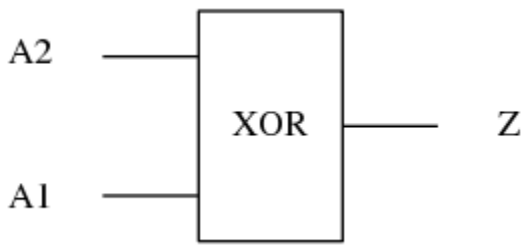

PIN CAPACITANCE (pf)

Pin	Type	Capacitance (pf)
A2	input	0.0103
A1	input	0.0108

DELAY AND OUTPUT TRANSITION TIME corresponding to min slew and load

Input Pin	Output	When Condition	Tin (ns)	Out Load (pf)	Delay (ns)	Tout (ns)
A2(HL)	Z(HL)	!A1	0.0100	0.0010	0.3227	0.0764
A2(LH)	Z(LH)	!A1	0.0100	0.0010	0.2148	0.0777
A2(HL)	Z(LH)	A1	0.0100	0.0010	0.1268	0.1037
A2(LH)	Z(HL)	A1	0.0100	0.0010	0.0678	0.0316
A1(LH)	Z(HL)	A2	0.0100	0.0010	0.0565	0.0316
A1(HL)	Z(LH)	A2	0.0100	0.0010	0.0933	0.0723
A1(LH)	Z(LH)	!A2	0.0100	0.0010	0.2693	0.1061
A1(HL)	Z(HL)	!A2	0.0100	0.0010	0.3493	0.0759

DYNAMIC ENERGY

Input Pin	When Condition	Tin (ns)	Output	Out Load (pf)	Energy (uW/MHz)
A2	!A1	0.0100	Z(HL)	0.0010	0.4097
A2	A1	0.0100	Z(HL)	0.0010	-0.0048
A1	A2	0.0100	Z(HL)	0.0010	-0.0208
A1	!A2	0.0100	Z(HL)	0.0010	0.4369
A2	!A1	0.0100	Z(LH)	0.0010	0.2158
A2	A1	0.0100	Z(LH)	0.0010	0.2562
A1	A2	0.0100	Z(LH)	0.0010	0.2055
A1	!A2	0.0100	Z(LH)	0.0010	0.2988

LEAKAGE POWER

When Condition	Power (nW)
!A1&!A2	0.2063
A1&A2	0.1300
!A1&A2	0.1275
A1&!A2	0.2030

gf180mcu_fd_sc_mcu9t5v0__xor2_2

gf180mcu_fd_sc_mcu9t5v0__xor2_2 symbol

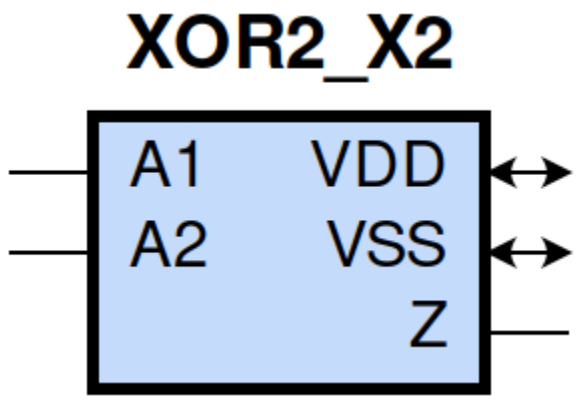

gf180mcu_fd_sc_mcu9t5v0__xor2_2 schematic

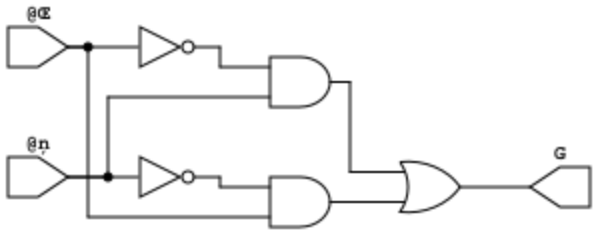

gf180mcu_fd_sc_mcu9t5v0__xor2_2 layout

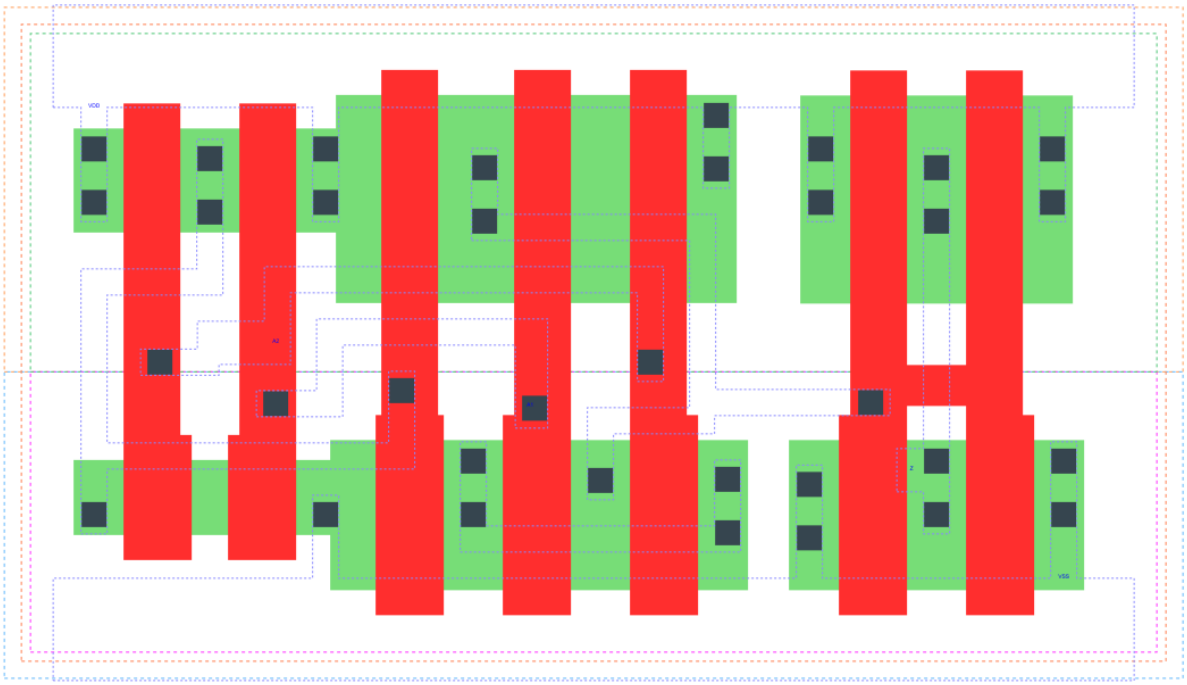

XOR2_X2 is a 2-input exclusive OR with 2X drive strength

Attributes

Attribute	Value
area	47.980800 μm^2

OUTPUT FUNCTIONS

Output Pin	Function
Z	(A1^A2)

TRUTH TABLE FOR Z

A1	A2	Z
1	0	1
0	1	1
1	1	0
0	0	0

FUNCTIONAL SCHEMATIC

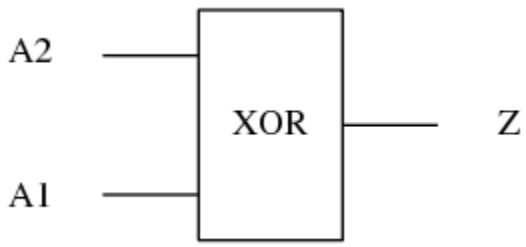

PIN CAPACITANCE (pf)

Pin	Type	Capacitance (pf)
A2	input	0.0104
A1	input	0.0108

DELAY AND OUTPUT TRANSITION TIME corresponding to min slew and load

Input Pin	Output	When Condition	Tin (ns)	Out Load (pf)	Delay (ns)	Tout (ns)
A2(HL)	Z(HL)	!A1	0.0100	0.0010	0.2636	0.0394
A2(LH)	Z(LH)	!A1	0.0100	0.0010	0.2008	0.0322
A2(HL)	Z(LH)	A1	0.0100	0.0010	0.3426	0.0313
A2(LH)	Z(HL)	A1	0.0100	0.0010	0.3471	0.0328
A1(LH)	Z(HL)	A2	0.0100	0.0010	0.3597	0.0328
A1(HL)	Z(LH)	A2	0.0100	0.0010	0.3855	0.0327
A1(LH)	Z(LH)	!A2	0.0100	0.0010	0.1741	0.0305
A1(HL)	Z(HL)	!A2	0.0100	0.0010	0.2402	0.0395

DYNAMIC ENERGY

Input Pin	When Condition	Tin (ns)	Output	Out Load (pf)	Energy (uW/MHz)
A2	!A1	0.0100	Z(HL)	0.0010	0.6586
A2	A1	0.0100	Z(HL)	0.0010	0.6326
A1	A2	0.0100	Z(HL)	0.0010	0.6717
A1	!A2	0.0100	Z(HL)	0.0010	0.6139
A2	!A1	0.0100	Z(LH)	0.0010	0.3354
A2	A1	0.0100	Z(LH)	0.0010	0.6282
A1	A2	0.0100	Z(LH)	0.0010	0.6962
A1	!A2	0.0100	Z(LH)	0.0010	0.2804

LEAKAGE POWER

When Condition	Power (nW)
!A1&!A2	0.1801
A1&A2	0.2669
!A1&A2	0.2558
A1&!A2	0.1803

gf180mcu_fd_sc_mcu9t5v0__xor2_4

gf180mcu_fd_sc_mcu9t5v0__xor2_4 symbol

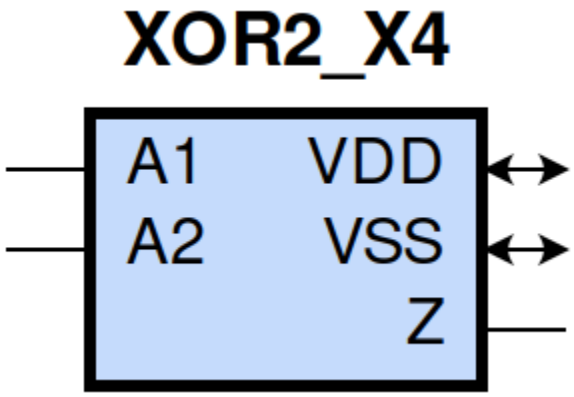

gf180mcu_fd_sc_mcu9t5v0__xor2_4 schematic

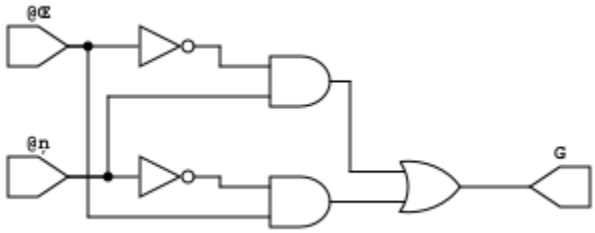

gf180mcu_fd_sc_mcu9t5v0__xor2_4 layout

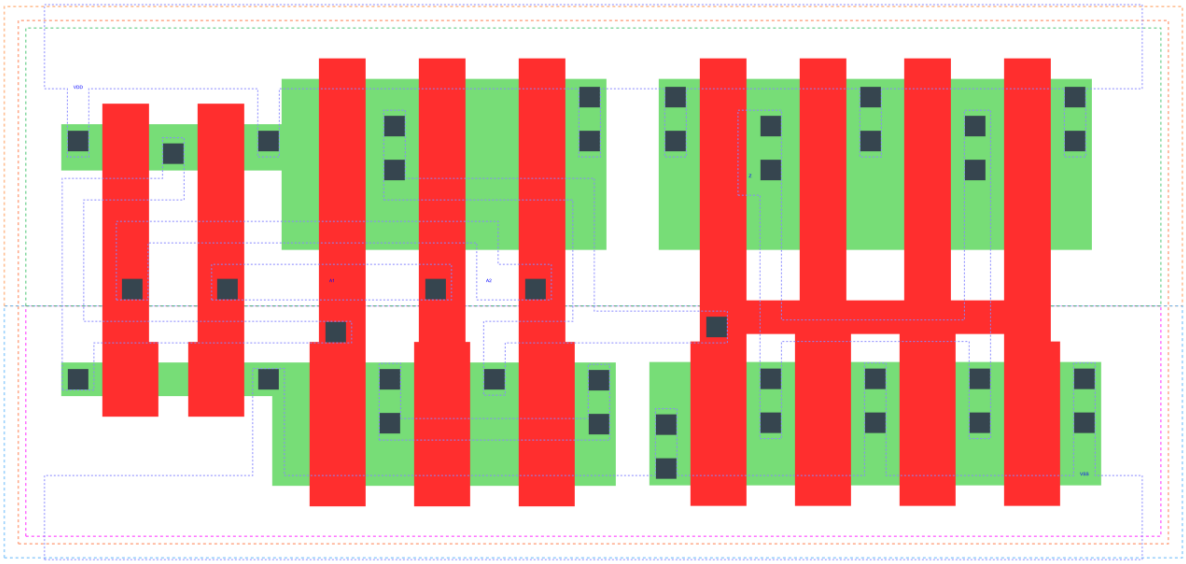

XOR2_X4 is a 2-input exclusive OR with 4X drive strength

Attributes

Attribute	Value
area	59.270400 μm^2

OUTPUT FUNCTIONS

Output Pin	Function
Z	(A1^A2)

TRUTH TABLE FOR Z

A1	A2	Z
1	0	1
0	1	1
1	1	0
0	0	0

FUNCTIONAL SCHEMATIC

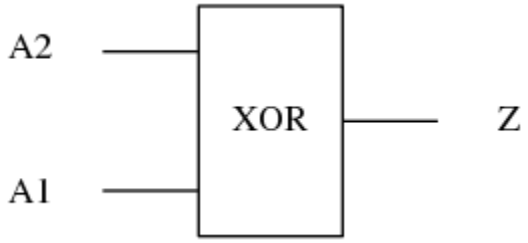

PIN CAPACITANCE (pf)

Pin	Type	Capacitance (pf)
A2	input	0.0095
A1	input	0.0095

DELAY AND OUTPUT TRANSITION TIME corresponding to min slew and load

Input Pin	Output	When Condition	Tin (ns)	Out Load (pf)	Delay (ns)	Tout (ns)
A2(HL)	Z(HL)	!A1	0.0100	0.0010	0.3757	0.0574
A2(LH)	Z(LH)	!A1	0.0100	0.0010	0.2781	0.0407
A2(HL)	Z(LH)	A1	0.0100	0.0010	0.5020	0.0405
A2(LH)	Z(HL)	A1	0.0100	0.0010	0.4798	0.0437
A1(LH)	Z(HL)	A2	0.0100	0.0010	0.4920	0.0436
A1(HL)	Z(LH)	A2	0.0100	0.0010	0.5478	0.0416
A1(LH)	Z(LH)	!A2	0.0100	0.0010	0.2496	0.0392
A1(HL)	Z(HL)	!A2	0.0100	0.0010	0.3518	0.0574

DYNAMIC ENERGY

Input Pin	When Condition	Tin (ns)	Output	Out Load (pf)	Energy (uW/MHz)
A2	!A1	0.0100	Z(HL)	0.0010	1.3649
A2	A1	0.0100	Z(HL)	0.0010	1.1806
A1	A2	0.0100	Z(HL)	0.0010	1.2189
A1	!A2	0.0100	Z(HL)	0.0010	1.3205
A2	!A1	0.0100	Z(LH)	0.0010	0.8068
A2	A1	0.0100	Z(LH)	0.0010	1.0702
A1	A2	0.0100	Z(LH)	0.0010	1.1478
A1	!A2	0.0100	Z(LH)	0.0010	0.7343

LEAKAGE POWER

When Condition	Power (nW)
!A1&!A2	0.2342
A1&A2	0.3199
!A1&A2	0.3093
A1&!A2	0.2336

gf180mcu_fd_sc_mcu9t5v0__xor3_1

gf180mcu_fd_sc_mcu9t5v0__xor3_1 symbol

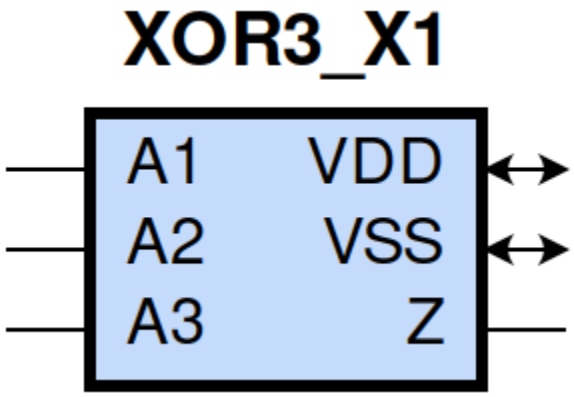

gf180mcu_fd_sc_mcu9t5v0__xor3_1 schematic

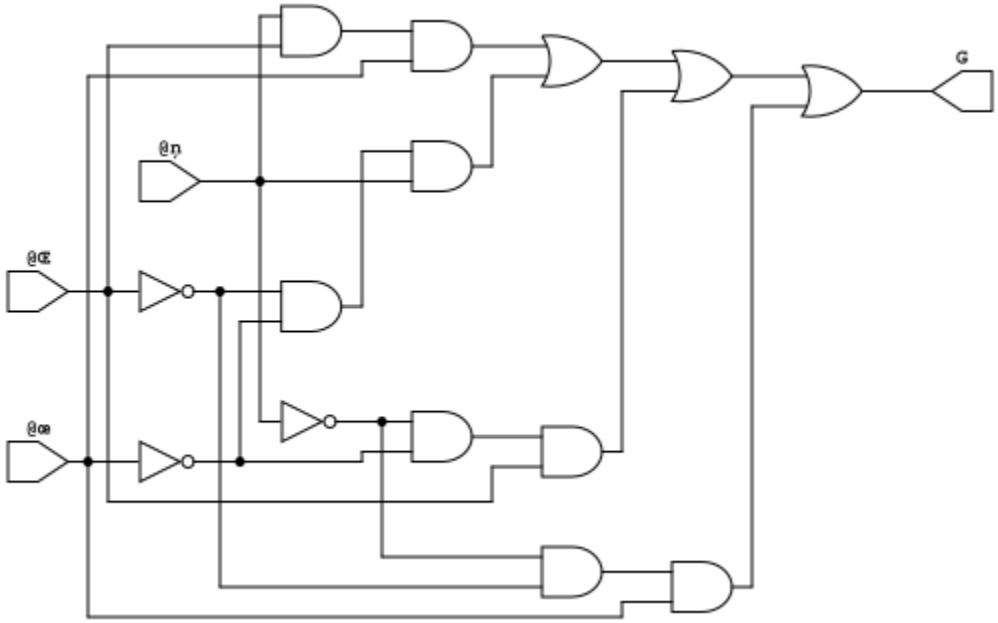

gf180mcu_fd_sc_mcu9t5v0__xor3_1 layout

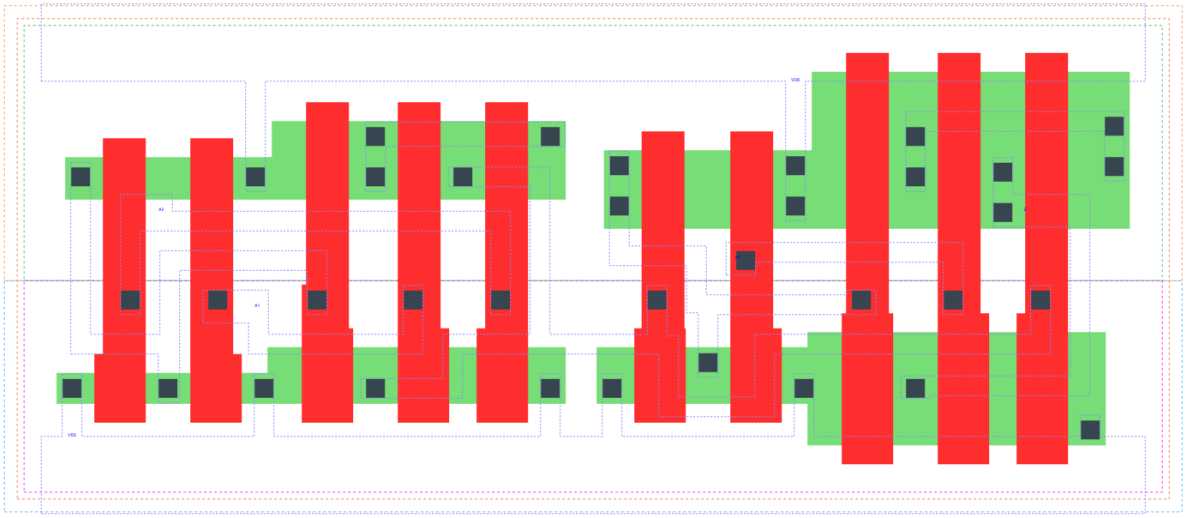

XOR3_X1 is a 3-input exclusive OR with 1X drive strength

Attributes

Attribute	Value
area	64.915200 μm^2

OUTPUT FUNCTIONS

Output Pin	Function
Z	(A1^A2^A3)

TRUTH TABLE FOR Z

A1	A2	A3	Z
1	1	1	1
1	0	0	1
0	1	0	1
0	0	1	1
1	1	0	0
1	0	1	0
0	1	1	0
0	0	0	0

FUNCTIONAL SCHEMATIC

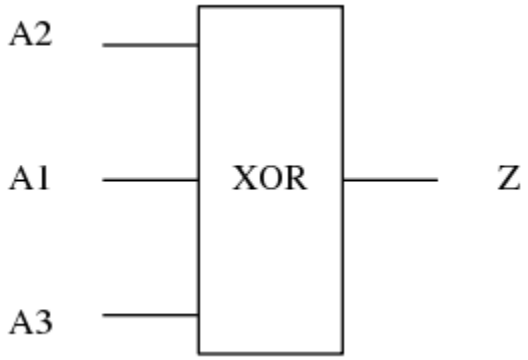

PIN CAPACITANCE (pf)

Pin	Type	Capacitance (pf)
A2	input	0.0067
A1	input	0.0066
A3	input	0.0104

DELAY AND OUTPUT TRANSITION TIME corresponding to min slew and load

Input Pin	Output	When Condition	Tin (ns)	Out Load (pf)	Delay (ns)	Tout (ns)
A2(HL)	Z(HL)	!A1&!A3	0.0100	0.0010	0.8441	0.0766
A2(HL)	Z(HL)	A1&A3	0.0100	0.0010	0.4045	0.0826
A2(LH)	Z(LH)	!A1&!A3	0.0100	0.0010	0.6919	0.0792
A2(LH)	Z(LH)	A1&A3	0.0100	0.0010	0.3488	0.1090
A2(HL)	Z(LH)	!A1&A3	0.0100	0.0010	0.6436	0.1051
A2(HL)	Z(LH)	A1&!A3	0.0100	0.0010	0.5870	0.0794
A2(LH)	Z(HL)	!A1&A3	0.0100	0.0010	0.5139	0.0768
A2(LH)	Z(HL)	A1&!A3	0.0100	0.0010	0.5527	0.0776
A1(LH)	Z(HL)	!A2&A3	0.0100	0.0010	0.5596	0.0825
A1(LH)	Z(HL)	A2&!A3	0.0100	0.0010	0.5416	0.0774
A1(HL)	Z(LH)	!A2&A3	0.0100	0.0010	0.6715	0.1053
A1(HL)	Z(LH)	A2&!A3	0.0100	0.0010	0.5552	0.0790
A1(LH)	Z(LH)	!A2&!A3	0.0100	0.0010	0.7422	0.0797
A1(LH)	Z(LH)	A2&A3	0.0100	0.0010	0.3373	0.1088
A1(HL)	Z(HL)	!A2&!A3	0.0100	0.0010	0.8721	0.0764
A1(HL)	Z(HL)	A2&A3	0.0100	0.0010	0.3769	0.0767
A3(LH)	Z(LH)	!A1&!A2	0.0100	0.0010	0.2686	0.1055
A3(LH)	Z(LH)	A1&A2	0.0100	0.0010	0.2685	0.1057
A3(HL)	Z(LH)	!A1&A2	0.0100	0.0010	0.0913	0.0709
A3(HL)	Z(LH)	A1&!A2	0.0100	0.0010	0.0913	0.0709
A3(HL)	Z(HL)	!A1&!A2	0.0100	0.0010	0.3465	0.0759
A3(HL)	Z(HL)	A1&A2	0.0100	0.0010	0.3469	0.0763
A3(LH)	Z(HL)	!A1&A2	0.0100	0.0010	0.0555	0.0309
A3(LH)	Z(HL)	A1&!A2	0.0100	0.0010	0.0555	0.0309

DYNAMIC ENERGY

Input Pin	When Condition	Tin (ns)	Output	Out Load (pf)	Energy (uW/MHz)
A3	!A1&!A2	0.0100	Z(LH)	0.0010	0.2918
A3	A1&A2	0.0100	Z(LH)	0.0010	0.2919
A3	!A1&A2	0.0100	Z(LH)	0.0010	0.1951
A3	A1&!A2	0.0100	Z(LH)	0.0010	0.1951
A2	!A1&!A3	0.0100	Z(HL)	0.0010	0.6570
A2	A1&A3	0.0100	Z(HL)	0.0010	0.4641
A2	!A1&A3	0.0100	Z(HL)	0.0010	0.4375
A2	A1&!A3	0.0100	Z(HL)	0.0010	0.4181
A1	!A2&A3	0.0100	Z(HL)	0.0010	0.4897
A1	A2&!A3	0.0100	Z(HL)	0.0010	0.4090
A1	!A2&!A3	0.0100	Z(HL)	0.0010	0.6712
A1	A2&A3	0.0100	Z(HL)	0.0010	0.4284
A2	!A1&!A3	0.0100	Z(LH)	0.0010	0.5831
A2	A1&A3	0.0100	Z(LH)	0.0010	0.2718
A2	!A1&A3	0.0100	Z(LH)	0.0010	0.5146
A2	A1&!A3	0.0100	Z(LH)	0.0010	0.6049
A1	!A2&A3	0.0100	Z(LH)	0.0010	0.5290
A1	A2&!A3	0.0100	Z(LH)	0.0010	0.5742
A1	!A2&!A3	0.0100	Z(LH)	0.0010	0.6307
A1	A2&A3	0.0100	Z(LH)	0.0010	0.2628
A3	!A1&!A2	0.0100	Z(HL)	0.0010	0.4384
A3	A1&A2	0.0100	Z(HL)	0.0010	0.4387
A3	!A1&A2	0.0100	Z(HL)	0.0010	-0.0141
A3	A1&!A2	0.0100	Z(HL)	0.0010	-0.0141

LEAKAGE POWER

When Condition	Power (nW)
!A1&!A2&!A3	0.3668
!A1&A2&A3	0.2070
A1&!A2&A3	0.2831
A1&A2&!A3	0.2850
!A1&!A2&A3	0.3635
!A1&A2&!A3	0.2044
A1&!A2&!A3	0.2805
A1&A2&A3	0.2817

gf180mcu_fd_sc_mcu9t5v0__xor3_2

gf180mcu_fd_sc_mcu9t5v0__xor3_2 symbol

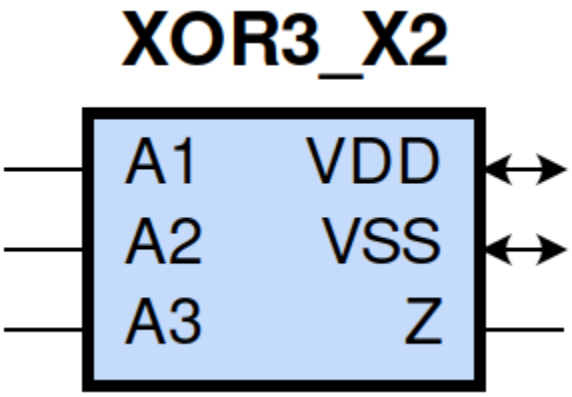

gf180mcu_fd_sc_mcu9t5v0__xor3_2 schematic

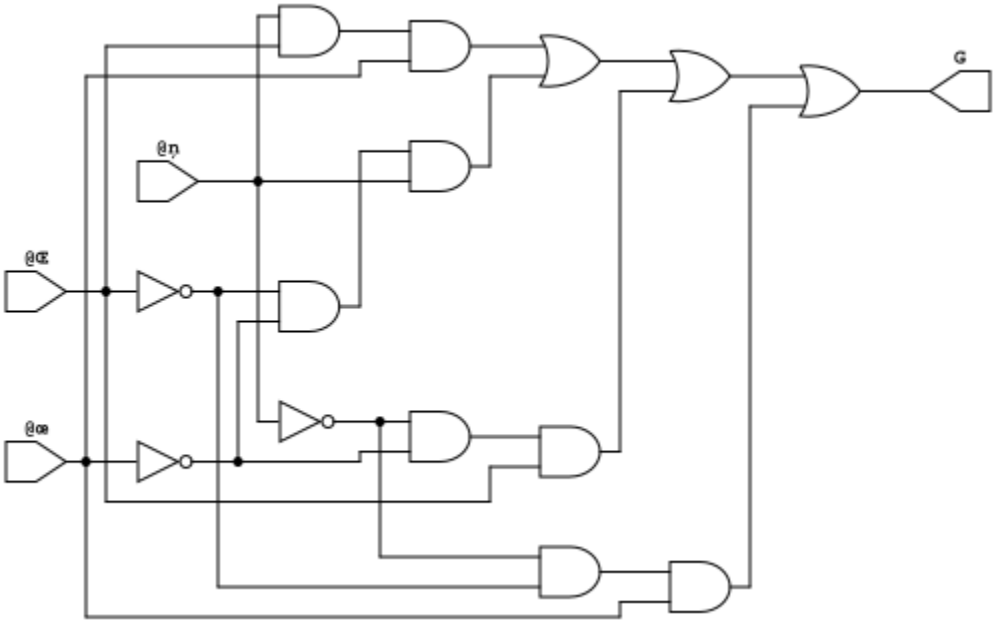

gf180mcu_fd_sc_mcu9t5v0__xor3_2 layout

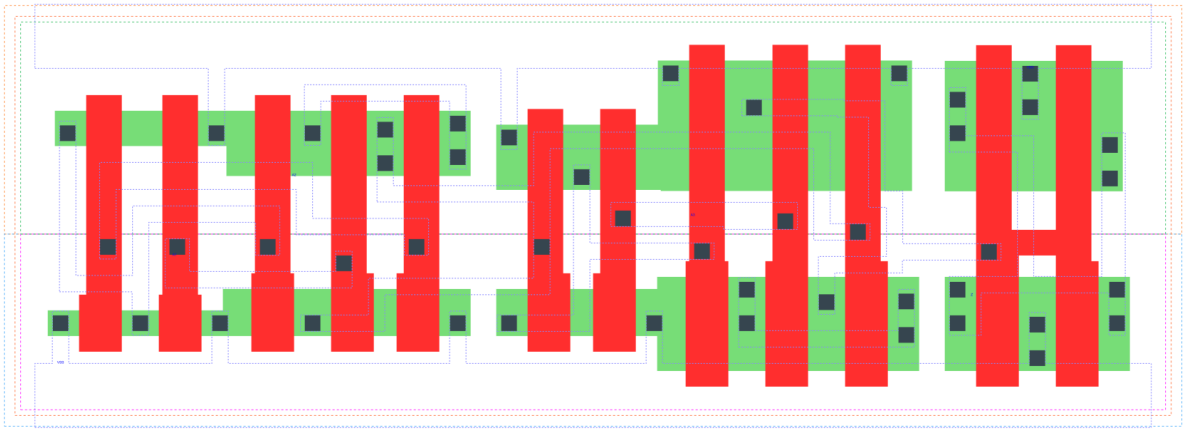

XOR3_X2 is a 3-input exclusive OR with 2X drive strength

Attributes

Attribute	Value
area	79.027200 μm^2

OUTPUT FUNCTIONS

Output Pin	Function
Z	(A1^A2^A3)

TRUTH TABLE FOR Z

A1	A2	A3	Z
1	1	1	1
1	0	0	1
0	1	0	1
0	0	1	1
1	1	0	0
1	0	1	0
0	1	1	0
0	0	0	0

FUNCTIONAL SCHEMATIC

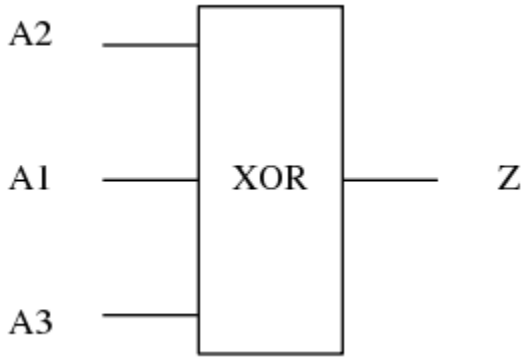

PIN CAPACITANCE (pf)

Pin	Type	Capacitance (pf)
A2	input	0.0068
A1	input	0.0065
A3	input	0.0103

DELAY AND OUTPUT TRANSITION TIME corresponding to min slew and load

Input Pin	Output	When Condition	Tin (ns)	Out Load (pf)	Delay (ns)	Tout (ns)
A2(HL)	Z(HL)	!A1&!A3	0.0100	0.0010	0.7714	0.0466
A2(HL)	Z(HL)	A1&A3	0.0100	0.0010	0.7846	0.0382
A2(LH)	Z(LH)	!A1&!A3	0.0100	0.0010	0.7424	0.0427
A2(LH)	Z(LH)	A1&A3	0.0100	0.0010	0.5658	0.0385
A2(HL)	Z(LH)	!A1&A3	0.0100	0.0010	0.8657	0.0383
A2(HL)	Z(LH)	A1&!A3	0.0100	0.0010	0.6381	0.0431
A2(LH)	Z(HL)	!A1&A3	0.0100	0.0010	0.8892	0.0383
A2(LH)	Z(HL)	A1&!A3	0.0100	0.0010	0.4726	0.0473
A1(LH)	Z(HL)	!A2&A3	0.0100	0.0010	0.9442	0.0383
A1(LH)	Z(HL)	A2&!A3	0.0100	0.0010	0.4612	0.0473
A1(HL)	Z(LH)	!A2&A3	0.0100	0.0010	0.8946	0.0384
A1(HL)	Z(LH)	A2&!A3	0.0100	0.0010	0.6009	0.0427
A1(LH)	Z(LH)	!A2&!A3	0.0100	0.0010	0.7976	0.0432
A1(LH)	Z(LH)	A2&A3	0.0100	0.0010	0.5544	0.0384
A1(HL)	Z(HL)	!A2&!A3	0.0100	0.0010	0.8003	0.0466
A1(HL)	Z(HL)	A2&A3	0.0100	0.0010	0.7478	0.0384
A3(LH)	Z(LH)	!A1&!A2	0.0100	0.0010	0.1870	0.0376
A3(LH)	Z(LH)	A1&A2	0.0100	0.0010	0.1870	0.0376
A3(HL)	Z(LH)	!A1&A2	0.0100	0.0010	0.3936	0.0400
A3(HL)	Z(LH)	A1&!A2	0.0100	0.0010	0.3936	0.0400
A3(HL)	Z(HL)	!A1&!A2	0.0100	0.0010	0.2552	0.0461
A3(HL)	Z(HL)	A1&A2	0.0100	0.0010	0.2549	0.0461
A3(LH)	Z(HL)	!A1&A2	0.0100	0.0010	0.3681	0.0385
A3(LH)	Z(HL)	A1&!A2	0.0100	0.0010	0.3681	0.0385

DYNAMIC ENERGY

Input Pin	When Condition	Tin (ns)	Output	Out Load (pf)	Energy (uW/MHz)
A3	!A1&!A2	0.0100	Z(LH)	0.0010	0.3152
A3	A1&A2	0.0100	Z(LH)	0.0010	0.3151
A3	!A1&A2	0.0100	Z(LH)	0.0010	0.7417
A3	A1&!A2	0.0100	Z(LH)	0.0010	0.7418
A2	!A1&!A3	0.0100	Z(HL)	0.0010	0.9305
A2	A1&A3	0.0100	Z(HL)	0.0010	1.0508
A2	!A1&A3	0.0100	Z(HL)	0.0010	1.0306
A2	A1&!A3	0.0100	Z(HL)	0.0010	0.6914
A1	!A2&A3	0.0100	Z(HL)	0.0010	1.0803
A1	A2&!A3	0.0100	Z(HL)	0.0010	0.6829
A1	!A2&!A3	0.0100	Z(HL)	0.0010	0.9450
A1	A2&A3	0.0100	Z(HL)	0.0010	1.0179
A2	!A1&!A3	0.0100	Z(LH)	0.0010	0.8384
A2	A1&A3	0.0100	Z(LH)	0.0010	0.6623
A2	!A1&A3	0.0100	Z(LH)	0.0010	0.9048
A2	A1&!A3	0.0100	Z(LH)	0.0010	0.8679
A1	!A2&A3	0.0100	Z(LH)	0.0010	0.9186
A1	A2&!A3	0.0100	Z(LH)	0.0010	0.8255
A1	!A2&!A3	0.0100	Z(LH)	0.0010	0.8973
A1	A2&A3	0.0100	Z(LH)	0.0010	0.6534
A3	!A1&!A2	0.0100	Z(HL)	0.0010	0.6361
A3	A1&A2	0.0100	Z(HL)	0.0010	0.6360
A3	!A1&A2	0.0100	Z(HL)	0.0010	0.6749
A3	A1&!A2	0.0100	Z(HL)	0.0010	0.6749

LEAKAGE POWER

When Condition	Power (nW)
!A1&!A2&!A3	0.3405
!A1&A2&A3	0.3438
A1&!A2&A3	0.4199
A1&A2&!A3	0.2588
!A1&!A2&A3	0.3408
!A1&A2&!A3	0.3327
A1&!A2&!A3	0.4088
A1&A2&A3	0.2590

gf180mcu_fd_sc_mcu9t5v0__xor3_4

gf180mcu_fd_sc_mcu9t5v0__xor3_4 symbol

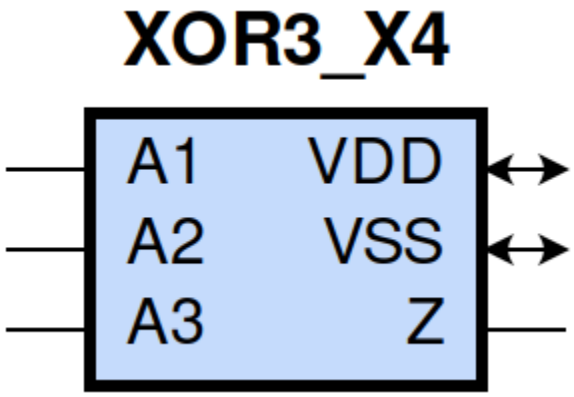

gf180mcu_fd_sc_mcu9t5v0__xor3_4 schematic

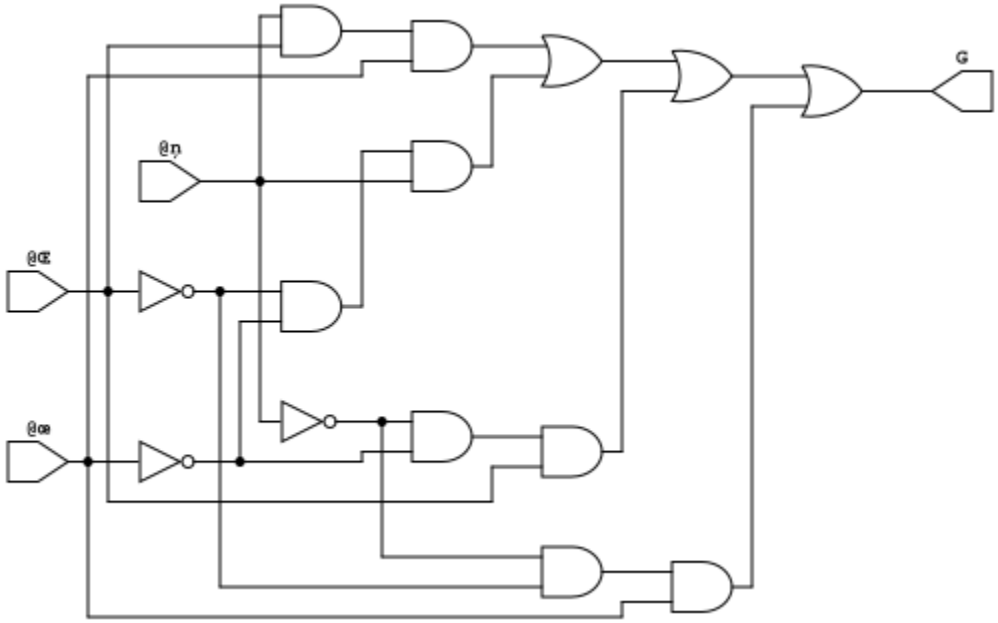

gf180mcu_fd_sc_mcu9t5v0__xor3_4 layout

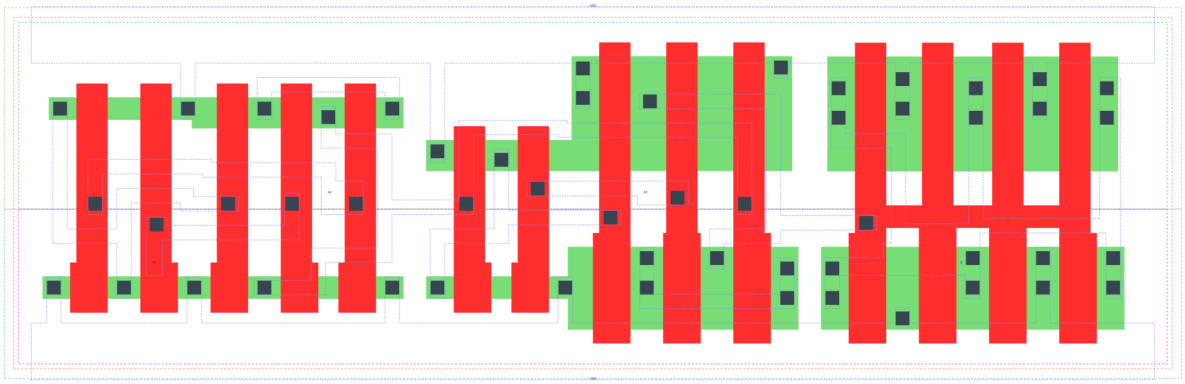

XOR3_X4 is a 3-input exclusive OR with 4X drive strength

Attributes

Attribute	Value
area	90.316800 μm^2

OUTPUT FUNCTIONS

Output Pin	Function
Z	(A1^A2^A3)

TRUTH TABLE FOR Z

A1	A2	A3	Z
1	1	1	1
1	0	0	1
0	1	0	1
0	0	1	1
1	1	0	0
1	0	1	0
0	1	1	0
0	0	0	0

FUNCTIONAL SCHEMATIC

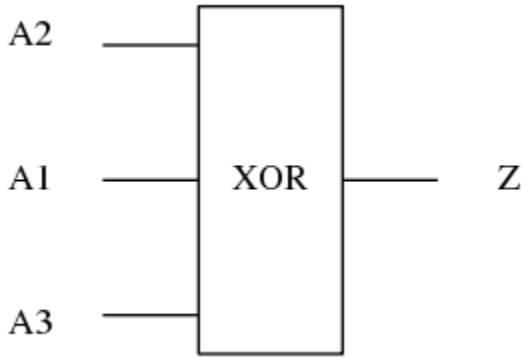

PIN CAPACITANCE (pf)

Pin	Type	Capacitance (pf)
A2	input	0.0052
A1	input	0.0052
A3	input	0.0092

DELAY AND OUTPUT TRANSITION TIME corresponding to min slew and load

Input Pin	Output	When Condition	Tin (ns)	Out Load (pf)	Delay (ns)	Tout (ns)
A2(HL)	Z(HL)	!A1&!A3	0.0100	0.0010	0.9605	0.0623
A2(HL)	Z(HL)	A1&A3	0.0100	0.0010	1.1162	0.0476
A2(LH)	Z(LH)	!A1&!A3	0.0100	0.0010	1.0213	0.0515
A2(LH)	Z(LH)	A1&A3	0.0100	0.0010	0.8067	0.0447
A2(HL)	Z(LH)	!A1&A3	0.0100	0.0010	1.1089	0.0449
A2(HL)	Z(LH)	A1&!A3	0.0100	0.0010	0.9230	0.0522
A2(LH)	Z(HL)	!A1&A3	0.0100	0.0010	1.2164	0.0474
A2(LH)	Z(HL)	A1&!A3	0.0100	0.0010	0.6566	0.0630
A1(LH)	Z(HL)	!A2&A3	0.0100	0.0010	1.2611	0.0474
A1(LH)	Z(HL)	A2&!A3	0.0100	0.0010	0.6454	0.0629
A1(HL)	Z(LH)	!A2&A3	0.0100	0.0010	1.1378	0.0445
A1(HL)	Z(LH)	A2&!A3	0.0100	0.0010	0.8841	0.0515
A1(LH)	Z(LH)	!A2&!A3	0.0100	0.0010	1.0679	0.0523
A1(LH)	Z(LH)	A2&A3	0.0100	0.0010	0.7955	0.0447
A1(HL)	Z(HL)	!A2&!A3	0.0100	0.0010	0.9891	0.0623
A1(HL)	Z(HL)	A2&A3	0.0100	0.0010	1.0793	0.0476
A3(LH)	Z(LH)	!A1&!A2	0.0100	0.0010	0.2568	0.0434
A3(LH)	Z(LH)	A1&A2	0.0100	0.0010	0.2570	0.0435
A3(HL)	Z(LH)	!A1&A2	0.0100	0.0010	0.5579	0.0466
A3(HL)	Z(LH)	A1&!A2	0.0100	0.0010	0.5579	0.0466
A3(HL)	Z(HL)	!A1&!A2	0.0100	0.0010	0.3600	0.0618
A3(HL)	Z(HL)	A1&A2	0.0100	0.0010	0.3596	0.0618
A3(LH)	Z(HL)	!A1&A2	0.0100	0.0010	0.4980	0.0475
A3(LH)	Z(HL)	A1&!A2	0.0100	0.0010	0.4980	0.0475

DYNAMIC ENERGY

Input Pin	When Condition	Tin (ns)	Output	Out Load (pf)	Energy (uW/MHz)
A3	!A1&!A2	0.0100	Z(LH)	0.0010	0.7662
A3	A1&A2	0.0100	Z(LH)	0.0010	0.7670
A3	!A1&A2	0.0100	Z(LH)	0.0010	1.2171
A3	A1&!A2	0.0100	Z(LH)	0.0010	1.2171
A2	!A1&!A3	0.0100	Z(HL)	0.0010	1.5659
A2	A1&A3	0.0100	Z(HL)	0.0010	1.5255
A2	!A1&A3	0.0100	Z(HL)	0.0010	1.5143
A2	A1&!A3	0.0100	Z(HL)	0.0010	1.4077
A1	!A2&A3	0.0100	Z(HL)	0.0010	1.5448
A1	A2&!A3	0.0100	Z(HL)	0.0010	1.4008
A1	!A2&!A3	0.0100	Z(HL)	0.0010	1.5760
A1	A2&A3	0.0100	Z(HL)	0.0010	1.5046
A2	!A1&!A3	0.0100	Z(LH)	0.0010	1.4182
A2	A1&A3	0.0100	Z(LH)	0.0010	1.1123
A2	!A1&A3	0.0100	Z(LH)	0.0010	1.2820
A2	A1&!A3	0.0100	Z(LH)	0.0010	1.4510
A1	!A2&A3	0.0100	Z(LH)	0.0010	1.2929
A1	A2&!A3	0.0100	Z(LH)	0.0010	1.4077
A1	!A2&!A3	0.0100	Z(LH)	0.0010	1.4703
A1	A2&A3	0.0100	Z(LH)	0.0010	1.1055
A3	!A1&!A2	0.0100	Z(HL)	0.0010	1.3278
A3	A1&A2	0.0100	Z(HL)	0.0010	1.3277
A3	!A1&A2	0.0100	Z(HL)	0.0010	1.2032
A3	A1&!A2	0.0100	Z(HL)	0.0010	1.2032

LEAKAGE POWER

When Condition	Power (nW)
!A1&!A2&!A3	0.3948
!A1&A2&A3	0.4011
A1&!A2&A3	0.4776
A1&A2&!A3	0.3122
!A1&!A2&A3	0.3942
!A1&A2&!A3	0.3904
A1&!A2&!A3	0.4669
A1&A2&A3	0.3117

CHAPTER

TWO

CUSTOM DESIGN

2.1 Electrical Specifications

2.1.1 Specifications For 180MCU

GlobalFoundries Singapore PTE LTD

Electrical Parameters Specification

For 0.18um 3.3v/6v High Volage Process

1.0 Low Voltage Devices (3.3V)

#	PARAMETERS	XTORS	DIMENSIONS / COMMENTS	MIN	TYP	MAX	UNITS
1	Linear Threshold Voltage						
	VT0	NCH (NE2)	W/L = 10/0.28 (THIN GATE)	0.53	0.63	0.73	V
	VT0	PCH (PE2)	W/L = 10/0.28 (THIN GATE)	-0.85	-0.73	-0.61	V
2	Saturation Current						
	Idsat (| Vds | = | Vgs | = 3.3V)	NCH (NE2)	W/L = 10/0.28 (THIN GATE)	430	510	590	μA/um
	Idsat (| Vds | = | Vgs | = 3.3V)	PCH (PE2)	W/L = 10/0.28 (THIN GATE)	-290	-250	-210	μA/um
3	Subthreshold Current						
	Ioff (| Vds | = 3.63V @ 25°C)	NCH (NE2)	W/L = 10/0.28 (THIN GATE)	–	1	100	pA/μm
	Ioff (| Vds | = 3.63V @ 25°C)	PCH (PE2)	W/L = 10/0.28 (THIN GATE)	-20	-1	–	pA/μm
4	Subthreshold Slope						
	SubVt Slope	NCH (NE2)	W/L = 10/0.28 (THIN GATE)	–	–	150	mV/dec
	SubVt Slope	PCH (PE2)	W/L = 10/0.28 (THIN GATE)	–	–	150	mV/dec
5	Punch-Through Voltage						
	BVDSS	NCH (NE2)	W/L = 10/0.28 (THIN GATE)	7	9	–	V
	BVDSS	PCH (PE2)	W/L = 10/0.28 (THIN GATE)	–	-8.5	-6.5	V
6	Field Assisted Breakdown Voltage						
	BVDSF	NCH (NE2)	W/L = 210/0.28 (THIN GATE)	6.5	8.5	–	V
	BVDSF	PCH (PE2)	W/L = 210/0.28 (THIN GATE)	–	-8.5	-6.5	V
7	Field Transistor Threshold Voltage						
	Vtsat FN-Poly	NCH (NE2)	W/L = 210/0.28 (THIN GATE)	6.5	8.5	–	V
	Vtsat FP-Poly	PCH (PE2)	W/L = 210/0.28 (THIN GATE)	–	-8.5	-6.5	V

2.0 Medium Voltage Devices (6V)

#	PARAMETERS	XTORS	DIMENSIONS / COMMENTS	MIN	TYP	MAX	UNITS
1	Linear Threshold Voltage						
	VT0	NCH (NE2)	W/L= 10/0.7	0.61	0.73	0.85	V
	VT0	PCH (PE2)	W/L= 10/0.55	-0.98	-0.85	-0.72	V
2	Saturation Current						
	Idsat (| Vds | = | Vgs | = 6V)	NCH (NE2)	W/L= 10/0.7	480	570	660	μA/um
	Idsat (| Vds | = | Vgs | = 6V)	PCH (PE2)	W/L= 10/0.55	-340	-290	-240	μA/um
3	Subthreshold Current						
	Ioff (| Vds | = 6.6V @ 25°C)	NCH (NE2)	W/L= 10/0.7	–	1	10	pA/μm
	Ioff (| Vds | = 6.6V @ 25°C)	PCH (PE2)	W/L= 10/0.55	-10	-1	–	pA/μm
4	Sub threshold Slope						
	SubVt Slope	NCH (NE2)	W/L= 10/0.7	–	–	150	mV/dec
	SubVt Slope	PCH (PE2)	W/L= 10/0.55	–	–	150	mV/dec
5	Punch-Through Voltage						
	BVDSS	NCH (NE2)	W/L= 10/0.7	8.5	11	–	V
	BVDSS	PCH (PE2)	W/L= 10/0.55	–	-10.5	-8.5	V
6	Field Assisted Breakdown Voltage						
	BVDSF	NCH (NE2)	W/L= 200/0.36 (For 6V)	8.5	11	–	V
	BVDSF	PCH (PE2)	W/L= 200/0.36 (For 6V)	–	-10.5	-8.5	V
7	Field Transistor Threshold Voltage						
	Vtsat FN-M1	NCH (NE2)	W/L= 200/0.36 (For 6V)	8.5	11	–	V
	Vtsat FP-M1	PCH (PE2)	W/L= 200/0.36 (For 6V)	–	-10.5	-8.5	V

3.0 Medium Voltage Devices (5V)

#	PARAMETERS	XTORS	DIMENSIONS / COMMENTS	MIN	TYP	MAX	UNITS
1	Linear Threshold Voltage						
	VT0	NCH (NE2)	W/L= 10/0.6	0.58	0.7	0.82	V
	VT0	PCH (PE2)	W/L= 10/0.5	-0.96	-0.83	-0.7	V
2	Saturation Current						
	Idsat (| Vds | = | Vgs | = 5V)	NCH (NE2)	W/L= 10/0.6	400	500	600	μA/um
	Idsat (| Vds | = | Vgs | = 5V)	PCH (PE2)	W/L= 10/0.5	-280	-240	-200	μA/um
3	Subthreshold Current						
	Ioff (| Vds | = 5.5V @ 25°C)	NCH (NE2)	W/L= 10/0.6	–	1	10	pA/μm
	Ioff (| Vds | = 5.5V @ 25°C)	PCH (PE2)	W/L= 10/0.5	-10	-1	–	pA/μm
4	Punch-Through Voltage						
	BVDSS	NCH (NE2)	W/L= 10/0.6	8.5	11	–	V
	BVDSS	PCH (PE2)	W/L= 10/0.5	–	-10.5	-8.5	V

4.0 Native Vt transistor (6V)

#	PARAMETERS	XTORS	DIMENSIONS / COMMENTS	MIN	TYP	MAX	UNITS
1	Linear Threshold Voltage						
	VT0 (@Vds=0.1V,Vgs at Ids maximum Slope, Vt0=Vgs_intercept-0.5*Vds)	NCH (NE2)	W/L= 10/1.8	-0.32	-0.12	0.08	V
2	Saturation Current						
	Idsat (| Vds | = | Vgs | = 6V)	NCH (NE2)	W/L= 10/1.8	430	535	640	μA/um
3	Subthreshold Current						
	Ioff (| Vds | = 6.6V, Vgs=Vt0-0.5 @ 25°C)	NCH (NE2)	W/L= 10/1.8	-	1	50	uA/μm
4	Punch-Through Voltage						
	BVDSS (Vgs=Vt0-0.5 measure VD@ID=100uA*W@ 25°C)	NCH (NE2)	W/L= 10/1.8	8	12	-	V

5.0 General Specification (Resistor, Capacitor, Oxide, Junction and Parasitic NPN/PNP)

5.1 Sheet Resistance

#	PARAMETERS	XTORS	DIMENSIONS / COMMENTS	MIN	TYP	MAX	UNITS
1	Sheet Resistance						
	Wide N+ DIF (salicided)		5 um (measured @I=100uA)	1	6.3	15	Ω/sq
	Wide P+ DIF (salicided)		5 um (measured @I=100uA)	1	7	15	Ω/sq
	Wide N+ Poly (salicided)		5 um (measured @I=100uA)	1	6.8	15	Ω/sq
	Wide P+ Poly (salicided)		5 um (measured @I=100uA)	1	7.3	15	Ω/sq
	Wide N+ DIF (unsalicided)		5 um (measured @I=100uA)	45	60	75	Ω/sq
	Wide P+ DIF (unsalicided)		5 um (measured @I=100uA)	145	185	225	Ω/sq
	Wide N+ Poly (unsalicided)		5 um (measured @I=100uA)	250	310	370	Ω/sq
	Wide P+ Poly (unsalicided)		5 um (measured @I=100uA)	280	350	420	Ω/sq
	Wide Nwell (unsalicided)		5 um (measured @I=100uA)	800	1000	1200	Ω/sq
	Metal 1			76	90	104	mΩ/sq
	Metal 2			76	90	104	mΩ/sq
	Metal 3			76	90	104	mΩ/sq
	Metal 4			76	90	104	mΩ/sq
	Metal 5			76	90	104	mΩ/sq
	Top metal (9kA)			31	40	49	mΩ/sq
	Top metal (6kA)			50	60	70	mΩ/sq
	Top metal (11kA)			31	40	49	mΩ/sq
	Top metal (30kA)			6	9.5	14	mΩ/sq

5.2 Contact Resistance

#	PARAMETERS	XTORS	DIMENSIONS / COMMENTS	MIN	TYP	MAX	UNITS
2	Contact Resistance						
	M1-Poly (salicided)		0.22 x0.22	–	5.9	15	Ω/cont
	M1-N+ (salicided)		0.22 x0.22	–	6.3	15	Ω/cont
	M1-P+ (salicided)		0.22 x0.22	–	5.2	15	Ω/cont
	Via 1		0.26 x 0.26	–	4.5	15	Ω/via
	Via 2		0.26 x 0.26	–	4.5	15	Ω/via
	Via 3		0.26 x 0.26	–	4.5	15	Ω/via
	Via 4		0.26 x 0.26	–	4.5	15	Ω/via
	Via 5 (Top Via)		0.26 x 0.26	–	4.5	15	Ω/via

5.3 Gate oxide capacitance

#	PARAMETERS	XTORS	DIMENSIONS / COMMENTS	MIN	TYP	MAX	UNITS
3	Gate oxide capacitance						
	COX (Poly) 3.3V		3.3V GATE P	3.4	4.4	5.4	fF/μm2
	COX (Poly) 3.3V		3.3V GATE N	3.4	4.4	5.4	fF/μm2
	COX (Poly) 6V		6V GATE P	1.8	2.3	2.8	fF/μm2
	COX (Poly) 6V		6V GATE N	1.8	2.3	2.8	fF/μm2

5.4 Oxide Breakdown Voltage

#	PARAMETERS	XTORS	DIMENSIONS / COMMENTS	MIN	TYP	MAX	UNITS
4	Oxide Breakdown Voltage						
	BVox	NCH (NE2)	3.3V GATE	–	-9	-7	V
	BVox	PCH (PE2)	3.3V GATE	7	8.8	–	V
	BVox	NCH (NE2)	6V GATE	–	-16	-12	V
	BVox	PCH (PE2)	6V GATE	12	16	–	V

5.5 Junction Breakdown Voltage

#	PARAMETERS	XTORS	DIMENSIONS / COMMENTS	MIN	TYP	MAX	UNITS
5	Junction Breakdown Voltage						
	N+ / P- (3.3V NMOS)			7	11	–	
	P+ / N- (3.3V PMOS)			–	-10.5	-6.5	
	N+ / P- (6V NMOS)			8.5	11	–	V
	P+ / N- (6V PMOS)			–	-10.5	-8.5	V
	Nwell/P-Substrate			10	14	–	V

5.6 Parasitic Capacitance

#	PARAMETERS	XTORS	DIMENSIONS / COMMENTS	MIN	TYP	MAX	UNITS
6	PARASITIC CAPACITANCE						
	Poly-P-Substrate		0.18um BEOL	0.0962	0.111	0.13	fF/μm2
	M1-Diffusion		0.18um BEOL	0.0347	0.0402	0.0479	fF/μm2
	M1-P-Substrate		0.18um BEOL	0.0255	0.0295	0.0351	fF/μm2
	M1-Poly		0.18um BEOL	0.0427	0.0522	0.0672	fF/μm2
	M2-Poly		0.18um BEOL	0.015	0.0167	0.0189	fF/μm2
	M2-Diffusion		0.18um BEOL	0.0138	0.0153	0.017	fF/μm2
	M2-P-Substrate		0.18um BEOL	0.0121	0.0134	0.0151	fF/μm2
	M2-M1		0.18um BEOL	0.0337	0.0394	0.0472	fF/μm2
	M3-M1		0.18um BEOL	0.0137	0.0151	0.0169	fF/μm2
	M3-M2		0.18um BEOL	0.0337	0.0394	0.0472	fF/μm2
	M4-M2		0.18um BEOL	0.0137	0.0151	0.0169	fF/μm2
	M4-M3		0.18um BEOL	0.0337	0.0394	0.0472	fF/μm2
	M5-M3		0.18um BEOL	0.0137	0.0151	0.0169	fF/μm2
	M5-M4		0.18um BEOL	0.0337	0.0394	0.0472	fF/μm2
	TM-M4		0.18um BEOL	0.0137	0.0151	0.0169	fF/μm2
	TM-M5		0.18um BEOL	0.0337	0.0394	0.0472	fF/μm2

5.7 Temperature Coefficient

#	PARAMETERS	XTORS	DIMENSIONS / COMMENTS	MIN	TYP	MAX	UNITS
7	TEMPERATURE COEFFICIENT						
	TC (Metal 1)		0.18um BEOL	0.28	0.33	0.38	%/degC
	TC (Metal 2)		0.18um BEOL	0.28	0.33	0.38	%/degC
	TC (Metal 3)		0.18um BEOL	0.28	0.33	0.38	%/degC
	TC (Metal 4)		0.18um BEOL	0.28	0.33	0.38	%/degC
	TC (Metal 5)		0.18um BEOL	0.28	0.33	0.38	%/degC
	TC (Top Metal @ 6kA)		0.18um BEOL	0.3	0.35	0.4	%/degC
	TC (Top Metal @ 9kA)		0.18um BEOL	0.31	0.37	0.43	%/degC
	TC (Top Metal @ 11kA)		0.18um BEOL	0.31	0.37	0.43	%/degC
	TC (Top Metal @ 30kA)		0.18um BEOL	0.33	0.39	0.45	%/degC
	TC (Active Contact)		0.18um BEOL	0.062	0.073	0.084	%/degC
	TC (Poly Contact)		0.18um BEOL	0.081	0.095	0.109	%/degC
	TC (Via1, Via2, Via3, Via4, Via5)		0.18um BEOL	0.091	0.107	0.123	%/degC

5.8 Vertical BJT Transistors

#	PARAMETERS	XTORS	DIMENSIONS / COMMENTS	MIN	TYP	MAX	UNITS
8	VERTICAL BJT TRANSISTORS						
	VPNP VBE	(3.3V LV)	W/L= 0.42/10 (Emitter Size)	-0.83	-0.73	-0.63	V
	VPNP HFE	(3.3V LV)	W/L= 0.42/10 (Emitter Size)	0.8	1.6	2.4	
	VPNP BVCEO	(3.3V LV)	W/L= 0.42/10 (Emitter Size)	–	-15	-10	V
	VPNP VA	(3.3V LV)	W/L= 0.42/10 (Emitter Size)	30	–	–	V

6.0 Optional Passive Elements

6.1A 1000 ohm/sq High Poly Resistor

Table 1: 1000ohm/sq High Poly Resistor require 1 extra mask layer (L63)

#	PARAMETERS	SLM_ID	DIMENSIONS / COMMENTS	MIN	TYP	MAX	UNITS
1	Rsheet (Sheet Resistance)	SAB RES2	W = 10um (to monitor film Rs)	800	1000	1200	□/sq
2	Temp. Coeff. TCR1	*Test Chip	W > 3um,	-1200	-1000	-800	ppm/K
3	Voltage Coeff, VCR1	*Test Chip	W > 3um,	*	-200	*	ppm/V

6.1B 2000 ohm/sq High Poly Resistor

Table 2: 2000ohm/sq High Poly Resistor require 1 extra mask layer (L63 Resistor)

#	PARAMETERS	SLM_ID	DIMENSIONS / COMMENTS	MIN	TYP	MAX	UNITS
1	Rsheet (Sheet Resistance)	SAB RES2	W = 10um (to monitor film Rs)	1600	2000	2400	□/sq
2	Temp. Coeff. TCR1	*Test Chip	W > 3um,	-1300	-1650	-1900	ppm/K
3	Voltage Coeff, VCR1	*Test Chip	W > 3um,	-100	-150	-200	ppm/V

Note: 1000ohm/sq resistor and 2000ohm/sq resistor cannot coexist in a process.

6.1C 3000 ohm/sq High Poly Resistor

Table 3: 3000ohm/sq High Poly Resistor require 1 extra mask layer (L63 Resistor)

#	PARAMETERS	SLM_ID	DIMENSIONS / COMMENTS	MIN	TYP	MAX	UNITS
1	Rsheet (Sheet Resistance)	SAB RES2	W = 10um (to monitor film Rs)	2250	3000	3750	□/sq
2	Temp. Coeff. TCR1	*Test Chip	W > 3um,	–	–	–	ppm/K
3	Voltage Coeff, VCR1	*Test Chip	W > 3um,	–	–	–	ppm/V

Note: Note: 1000ohm/sq resistor, 2000ohm/sq and 3000ohm/sq resistor cannot coexist in a process.

6.2 MIM Capacitor

Three types of MIM-capacitor are offered; they are 2.0fF/um2, 1.5fF/um2, 1.0 fF/um2. Extra mask layer (L92) is required for the MIM Cap.

Note: One process is only allowed to use one type of MIM-capacitor; it is not possible to have more than one type of MIM Caps in the same process flow with just one masking step.

(a) 1.5 fF/um2 MIM CAP (<=6V application)

#	PARAMETERS	SLM_II	DIMENSIONS / COMMENTS	MIN	TYP	MAX	UNITS
1	Capacitance	MIM2*	Zero bias capacitance from 350X50 sq. um capacitor.	1.27	1.5	1.73	fF/um2
2	Leakage current	MIM2*	@ V=6V	–	–	1	pA/um2
3	BVox	MIM2*	(@10uA)	10	30	–	V
4	Voltage Coefficient, Vc1	*Test Chip	@ V € (-6 – +6V)	5.7	7.6	9.5	ppm/V
5	Temp Coefficient (TC1)	*Test Chip	(@10uA)	9.9	13.3	16.6	ppm/K
6	Sheet res. bottom plate	*Test Chip		68	80	92	m./sq
7	Sheet res. top plate	*Test Chip		400	500	600	m./sq
8	Matching (adjacent capacitors)	*Test Chip	C = 1pF (Laid out as per characterization report guideline)	–	–	1	%
9	Max Operating voltage across MIM Cap	*Test Chip		–	–	10V	V

(b) 1fF/um2 MIM CAP (<=20V application)

#	PARAMETERS	SLM_II	DIMENSIONS / COMMENTS	MIN	TYP	MAX	UNITS
1	Capacitance	MIM1	Zero bias capacitance from 350X50 sq. um capacitor.	0.9	1	1.1	fF/um2
2	Leakage current	MIM1	@ V=16V	–	–	1	pA/um2
3	BVox	MIM1	(@10uA)	20	40	–	V
4	Voltage Coefficient, Vc1	*Test Chip	@ V € (-6 – +6V)	4.5	6	7.5	ppm/V
5	Temp Coefficient (TC1)	*Test Chip			10	20	ppm/K
6	Sheet res. bottom plate	*Test Chip		68	80	92	m./sq
7	Sheet res. top plate	*Test Chip		400	500	600	m./sq
8	Matching (adjacent capacitors)	*Test Chip	C = 1pF (Laid out as per characterization report guideline)	–	–	1	%
9	Max Operating voltage across MIM Cap			–	–	20	V

(c) 2fF/um2 Single MIM CAP (<=6V application)

#	PARAMETERS	SLM_II	DIMENSIONS / COMMENTS	MIN	TYP	MAX	UNITS
1	Capacitance	MIM2*	Zero bias capacitance from 350X50 sq. um capacitor.	1.8	2	2.2	fF/um2
2	Leakage current	MIM2*	@ V=6V	–	–	1	pA/um2
3	BVox	MIM2*	(@10uA)	10	24		V
4	Voltage Coefficient, Vc1	*Test Chip	@ V € (-6 – +6V)	–	-28.8	–	ppm/V
5	Temp Coefficient (TC1)	*Test Chip		–	18.8	–	ppm/K
6	Sheet res. bottom plate	*Test Chip		68	80	92	m./sq
7	Sheet res. top plate	*Test Chip		–	–	–	m./sq
8	Matching (adjacent capacitors)	*Test Chip	C = 1pF (Laid out as per characterization report guideline)	–	–	1	%
9	Max Operating voltage across MIM Cap			–	–	6.6	V

7.0 SAB Devices

7.1A 3.3V NMOS SAB

#	PARAMETERS	SLM_ID	DIMENSIONS / COMMENTS	MIN	TYP	MAX	UNITS
1	Idsat	*Paper	W/L = 10 / 0.28um	426	505	586	uA/um
2	Idlin	*Paper	DOP = 1.78um	52	57	63	uA/um
3	VT0	*Paper	SOP = 0.48um	0.53	0.63	0.73	V

7.1B 3.3V PMOS SAB

#	PARAMETERS	SLM_ID	DIMENSIONS / COMMENTS	MIN	TYP	MAX	UNITS
1	Idsat	*Paper	W/L = 10 / 0.28um	-206	-245	-286	uA/um
2	Idlin	*Paper	DOP = 1.78um	-18	-20	-23	uA/um
3	VT0	*Paper	SOP = 0.48um	-0.6	-0.72	-0.84	V

7.2A 5V NMOS SAB

#	PARAMETERS	SLM_ID	DIMENSIONS / COMMENTS	MIN	TYP	MAX	UNITS
1	Idsat	*Paper	W/L = 10 / 0.6um	398	498	598	uA/um
2	Idlin	*Paper	DOP = 3.78um	39	46	53	uA/um
3	VT0	*Paper	SOP = 0.28um	0.58	0.72	0.84	V

7.2B 5V PMOS SAB

#	PARAMETERS	SLM_ID	DIMENSIONS / COMMENTS	MIN	TYP	MAX	UNITS
1	Idsat	*Paper	W/L = 10 / 0.5um	-187	-233	-280	uA/um
2	Idlin	*Paper	DOP = 2.78um	-12	-14	-17	uA/um
3	VT0	*Paper	SOP = 0.28um	-0.71	-0.84	-0.97	V

7.3A 6V NMOS SAB

#	PARAMETERS	SLM_ID	DIMENSIONS / COMMENTS	MIN	TYP	MAX	UNITS
1	Idsat	*Paper	W/L = 10 / 0.7um	477	568	657	uA/um
2	Idlin	*Paper	DOP = 3.78um	38	44	49	uA/um
3	VT0	*Paper	SOP = 0.28um	0.6	0.73	0.85	V

7.3B 6V PMOS SAB

#	PARAMETERS	SLM_ID	DIMENSIONS / COMMENTS	MIN	TYP	MAX	UNITS
1	Idsat	*Paper	W/L = 10 / 0.55um	-238	-288	-338	uA/um
2	Idlin	*Paper	DOP = 2.78um	-12	-15	-17	uA/um
3	VT0	*Paper	SOP = 0.28um	-0.72	-0.85	-0.98	V

8.0 High Voltage LDMOS Transistor (10.0V)

8.1 High Voltage LDNMOS Transistor (10.0V)

#	PARAMETERS	XTORS	DIMENSIONS	MIN	TYP	MAX	UNITS
1	THRESHOLD VOLTAGE						
	Vtlin (Vds=0.05V, @ID=0.1*(W/L) uA)	LDNMOS	W/L = 25/0.6	0.71	0.84	0.97	V
2	SATURATION CURRENT						
	Idsat (| Vgs | = 6V, | Vds | = 10V)	LDNMOS	W/L = 25/0.6	444	535	626	μA/um
3	LINEAR CURRENT						
	Idlin (| Vgs | = 6V , | Vds | = 0.1V)	LDNMOS	W/L = 25/0.6	20.1	26.8	33.5	μA/μm
4	SUBTHRESHOLD CURRENT						
	Ioff (| Vds | = 11V @ 25°C)	LDNMOS	W/L = 25/0.6	–	0.1	20	pA/μm
	PUNCH-THROUGH VOLTAGE						
5	BVDSS	LDNMOS	W/L = 25/0.6	13.2	14.5	–	V

8.2 High Voltage LDPMOS Transistor (10.0V)

#	PARAMETERS	XTORS	DIMENSIONS	MIN	TYP	MAX	UNITS
1	THRESHOLD VOLTAGE						
	Vtlin (Vds=-0.05V, @ID=0.1*(W/L) uA)	LDPMOS	W/L = 25/0.6	-1.16	-1.02	-0.88	V
2	SATURATION CURRENT						
	Idsat (| Vgs | = 6V, | Vds | = 10V)	LDPMOS	W/L = 25/0.6	-320	-260	-200	μA/um
3	LINEAR CURRENT						
	Idlin (| Vgs | = 6V, | Vds | = 0.1V)	LDPMOS	W/L = 25/0.6	-11.3	-9	-6.75	μA/um
4	SUBTHRESHOLD CURRENT						
	Ioff (| Vds | = 11V @ 25°C)	LDPMOS	W/L = 25/0.6	-20	-1	–	pA/μm
5	PUNCH-THROUGH VOLTAGE						
	BVDSS	LDPMOS	W/L = 25/0.6	–	-14.5	-13.2	V

2.2 Interconnect Specifications

2.2.1 Specifications For 180MCU

GlobalFoundries Singapore PTE LTD

Interconnect Specification For

FAB3E 0.18UM 3.3V/6V High Voltage CMOS Technology

1.0 NOTE

This application note is intended as a user guide for IA BEOL options for GlobalFoundries FAB3E 0.18um 3.3/6V HIGH VOLTAGE CMOS Technology.

Technology parameters of all process options are provided.

IA specs are provided for the options of with/without MIM capacitor and options of 6KA or 9KA or 11KA or 30KA top metal layer.

4.1-4.4	for 1P3M (with/without MIM, 6KA TM/9KA TM)
4.5-4.8	for 1P4M (with/without MIM, 6KA TM/9KA TM)
4.9-4.12	for 1P5M (with/without MIM, 6KA TM/9KA TM)
4.13-4.16	for 1P6M (with/without MIM, 6KA TM/9KA TM)
4.17-4.18	for 1P4M (with MIM option B, 6KA TM/9KA TM)
4.19-4.20	for 1P5M (with MIM option B, 6KA TM/9KA TM)
4.21-4.22	for 1P6M (with MIM option B, 6KA TM/9KA TM)
4.23-4.24	for 1P3M (with/without MIM, 30KA TM)
4.25-4.27	for 1P4M (with/without MIM / MIM option B, 30KA TM)
4.28-4.30	for 1P5M (with/without MIM / MIM option B, 30KA TM)
4.31-4.33	for 1P6M (with/without MIM / MIM option B, 30KA TM)
4.34-4.35	for 1P3M (with/without MIM, 11KA TM)
4.36-4.37	for 1P4M (with/without MIM / MIM option B, 11KA TM)
4.38-4.39	for 1P5M (with/without MIM / MIM option B, 11KA TM)
4.40-4.41	for 1P6M (with/without MIM / MIM option B, 11KA TM)
4.42-4.44	for 1P4M/5M/6M (with MIM option B, 30KA TM)
4.45	for 1P2M (without MIN, 30KA TM)

2.0 Technology PARAMETERS

Tables presented in this section represent the technology parameters used in Raphael simulation for all possible layers. The process consists of 1P3M, 1P4M, 1P5M and 1P6M flows for 6KA or 9KA top metal and without or with MIM capacitor. The parameters used for the simulation and their corresponding definitions are shown below.

This following diagram depicts the shape of the metal layers and its top (tw) and bottom (bw) dimensions are given below.

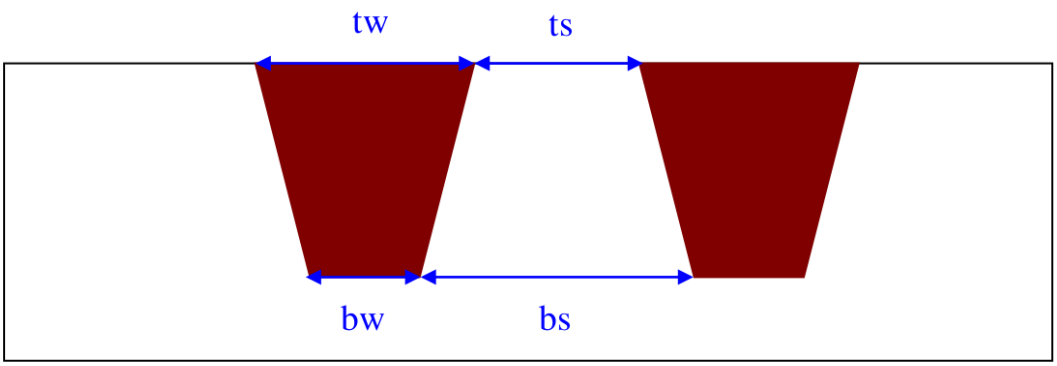

Note:

- W_drawn and S_draw are the EP spec values
- W_si and S_si are the actual Si process values
- tw and bw are the top and bottom width
- ts and bs are the top and bottom space

In the following table the technology parameters used in Raphael_2007.09 simulation are presented. The parameters are: - Thickness of Poly, Metal, STI, Inter-metal Dielectric and Inter-layer Dielectric (ILD) as well as width and space of poly and metal layers

The simulation results for the typical case presented in this document are obtained by using the average width of tw and bw, as well as average space of ts and bs for all metal layers, focusing on dense metal lines.

2.1 General conductor Layer Table for simulation

Conductor	Thickness (um) for typical cap	Thickness (um) for best cap	Thickness (um) for worst cap	Width (um) for typical cap	Width (um) for best cap	Width (um) for worst cap	Space (um) for typical cap	Space (um) for best cap	Space (um) for worst cap
TM (6KA)	0.7025	0.6325	0.7725	0.36	0.32	0.4	0.38	0.42	0.34
TM (9KA)	1.0025	0.9025	1.1025	0.44	0.4	0.48	0.46	0.5	0.42
TM (11KA)	1.25	1.125	1.375	0.44	0.4	0.48	0.46	0.5	0.42
TM (30kA)	3	2.7	3.3	1.8	1.62	1.98	1.8	1.98	1.62
MIM_To	0.295	0.265	0.325	1.06	0.954	1.166	0.6	0.706	0.494
M5	0.55	0.5	0.6	0.28	0.25	0.31	0.28	0.31	0.25
M4	0.55	0.5	0.6	0.28	0.25	0.31	0.28	0.31	0.25
M3	0.55	0.5	0.6	0.28	0.25	0.31	0.28	0.31	0.25
M2	0.55	0.5	0.6	0.28	0.25	0.31	0.28	0.31	0.25
M1	0.55	0.5	0.6	0.23	0.2	0.26	0.23	0.26	0.2
POLY1	0.2	0.19	0.21	0.18	0.16	0.2	0.25	0.27	0.23

2.2 General Dielectric Layer Table for simulation

Dielectric Layer	Thickness (um) for Typical Capacitance	Thickness (um) for the Best Capacitance	Thickness (um) for the Worst Capacitance	Dielectric Constant
Nit_pasvn	0.3	0.27	0.33	7
Oxd_pasvn (6KA)	1.4025	1.5425	1.2625	4
Oxd_pasvn (9KA)	2.0025	1.8028	2.2022	4
Oxd_pasvn (11KA)	2.3	2	2.6	4
Oxd_pasvn (30kA)	3.3	3	3.6	4
IMD5 (with MIM)	1.45	1.537	1.363	4
IMD5	1.15	1.219	1.081	4
IMD4 (with MIM)	1.45	1.537	1.363	4
IMD4	1.15	1.219	1.081	4
IMD3 (with MIM)	1.45	1.537	1.363	4
IMD3	1.15	1.219	1.081	4
IMD2 (with MIM)	1.45	1.537	1.363	4
MIM_SIN (1.5fF)	0.042	0.05	0.03	7
MIM_SIN(1	0.062	0.07	0.05	7
IMD2	1.15	1.219	1.081	4
IMD1	1.15	1.219	1.081	4
ILD	0.86	0.95	0.77	4
Nitr liner	0.05	0.0525	0.0475	7
STI	0.32	0.368	0.272	4

3.0 Cross Section Graphs For Different Metal Layer Options

3.1 1P3M (TM 6KA without MIM) Structure

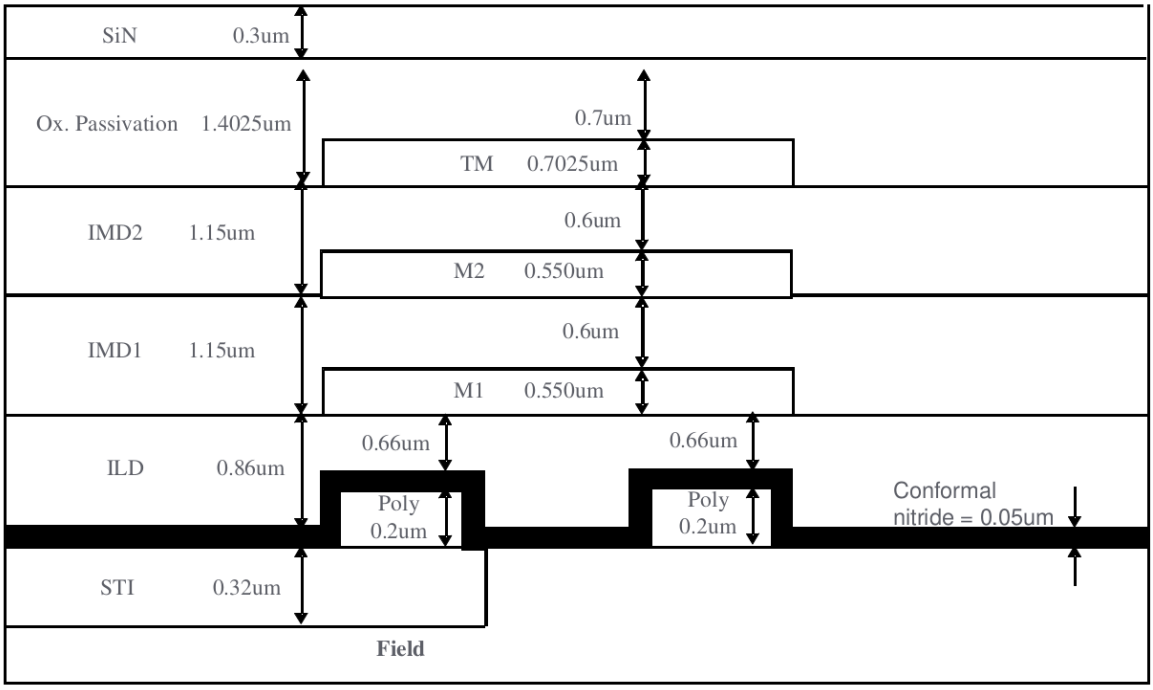

3.2 1P3M (TM 6KA with MIM) Structure

MIM was placed in between Metal2 and Metal3 (Top Metal); SIN=0.042um for 1.5fF, SIN=0.062um for 1.0fF

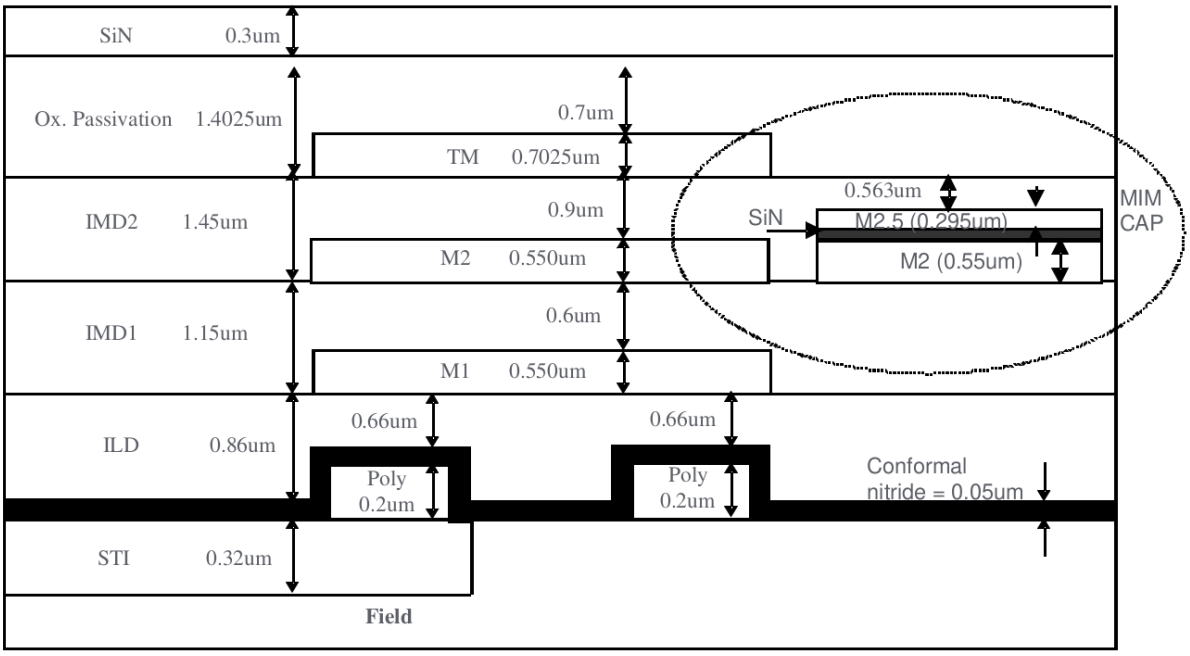

3.3 1P3M (TM 9KA without MIM) Structure

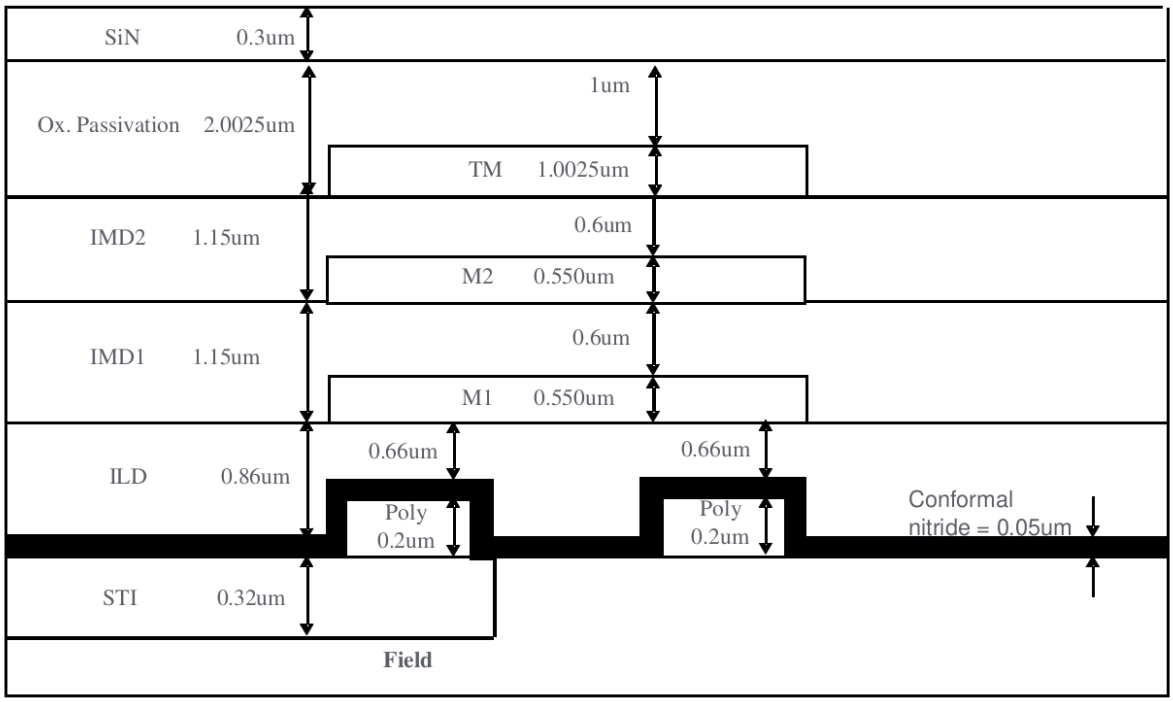

3.4 1P3M (TM 9KA with MIM) Structure

MIM was placed in between Metal2 and Metal3 (Top Metal); SIN=0.042um for 1.5fF, SIN=0.062um for 1.0fF

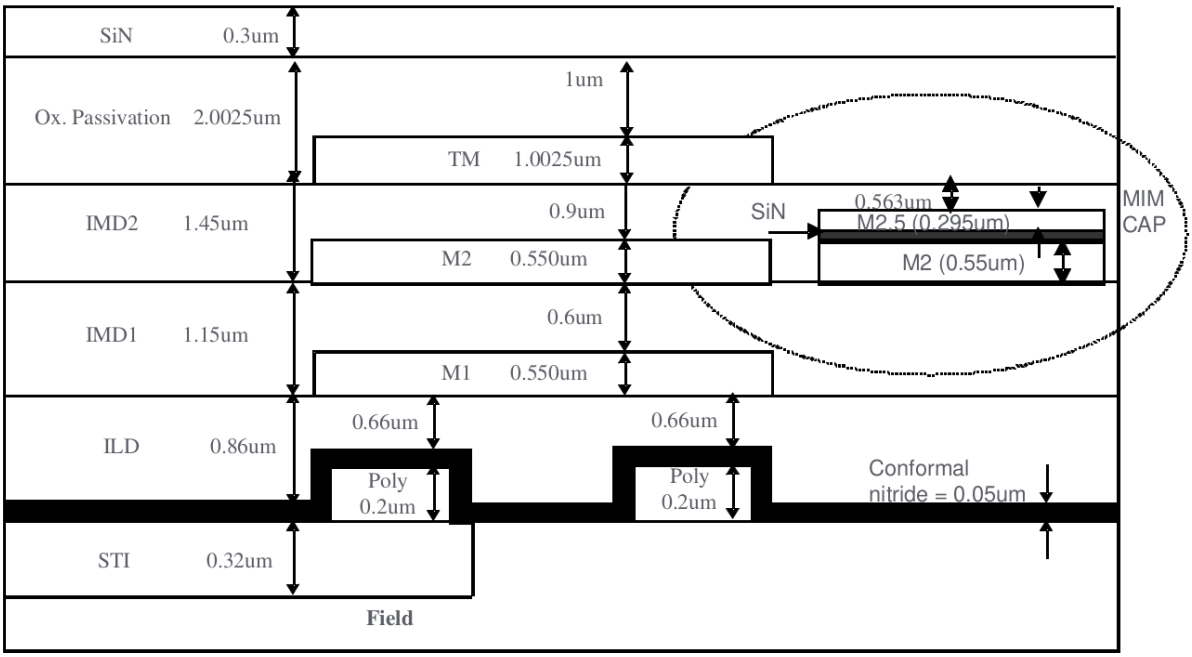

3.5 1P4M (TM 6KA without MIM) Structure

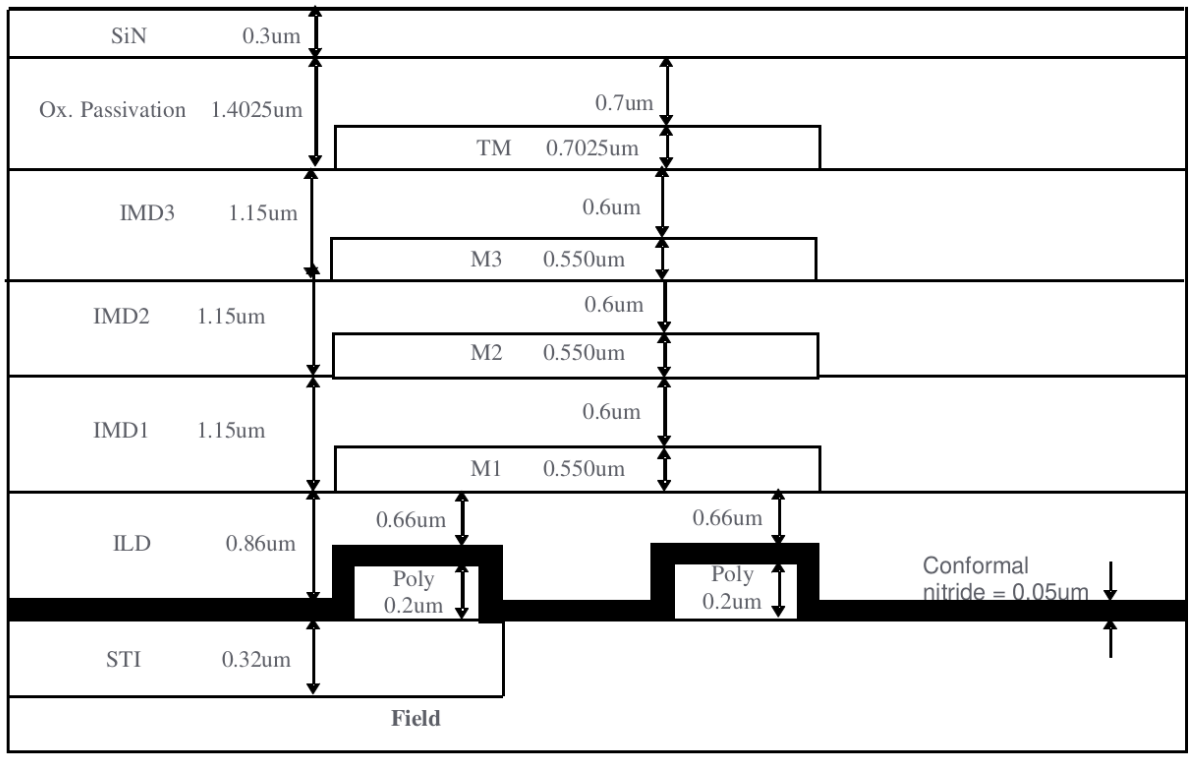

3.6 1P4M (TM 6KA with MIM) Structure

MIM was placed in between Metal2 and Metal3; SIN=0.042um for 1.5fF, SIN=0.062um for 1.0fF

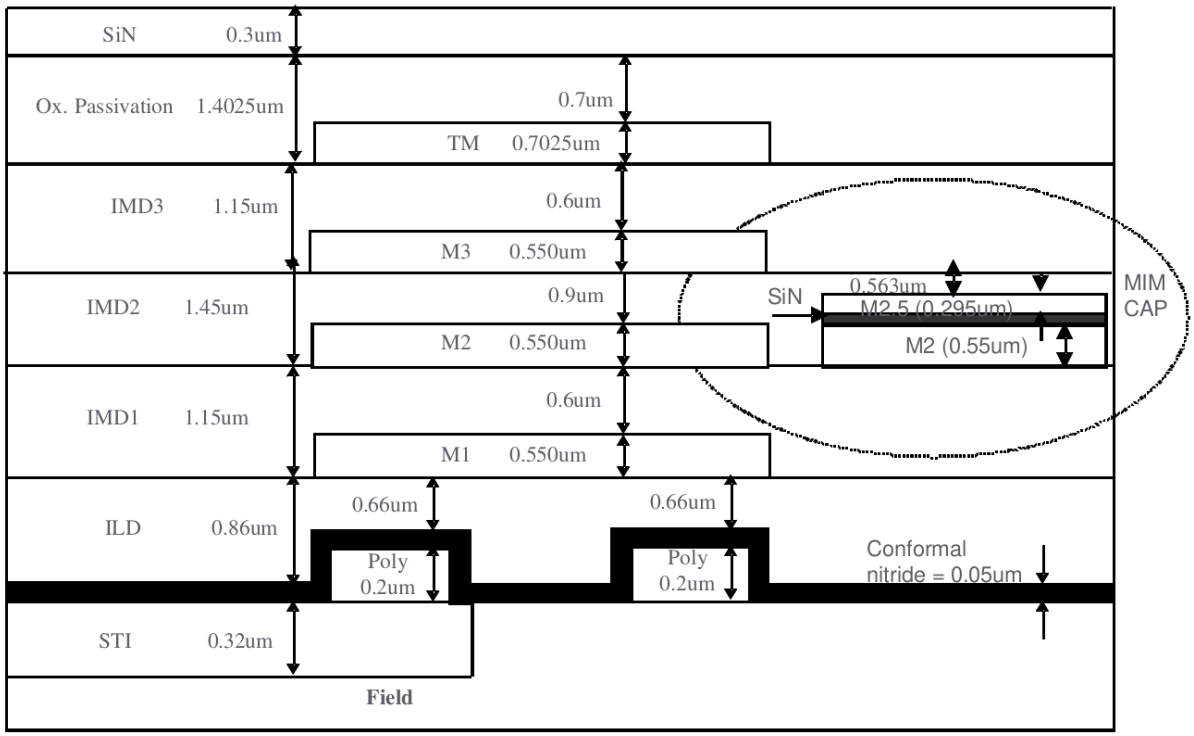

3.7 1P4M (TM 9KA without MIM) Structure

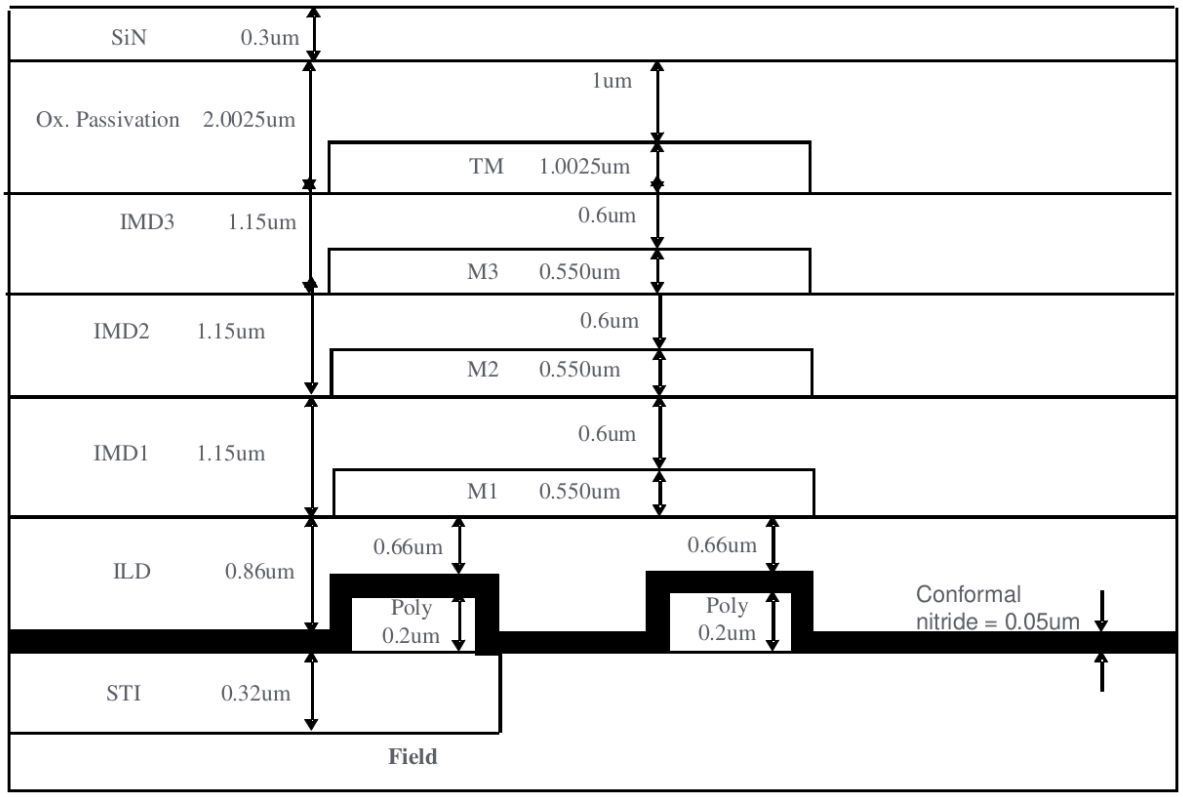

3.8 1P4M (TM 9KA with MIM) Structure

MIM was placed in between Metal2 and Metal3; SIN=0.042um for 1.5fF, SIN=0.062um for 1.0fF

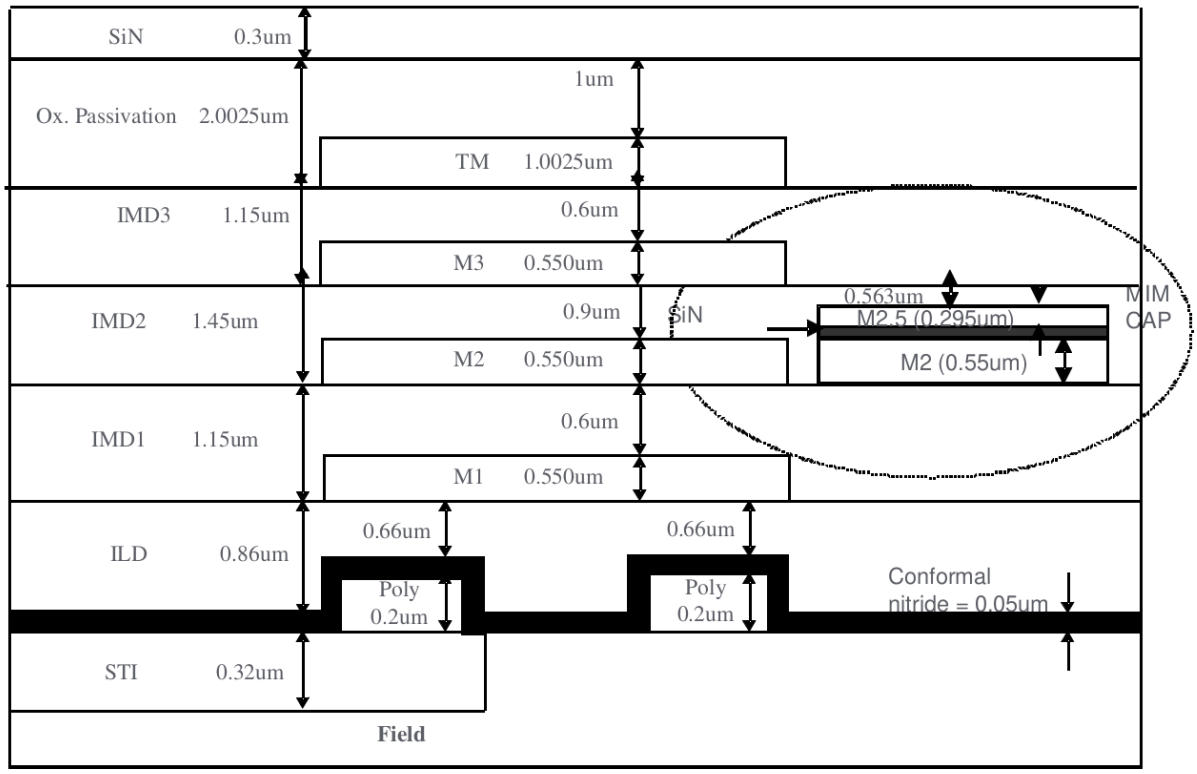

3.9 1P5M (TM 6KA without MIM) Structure

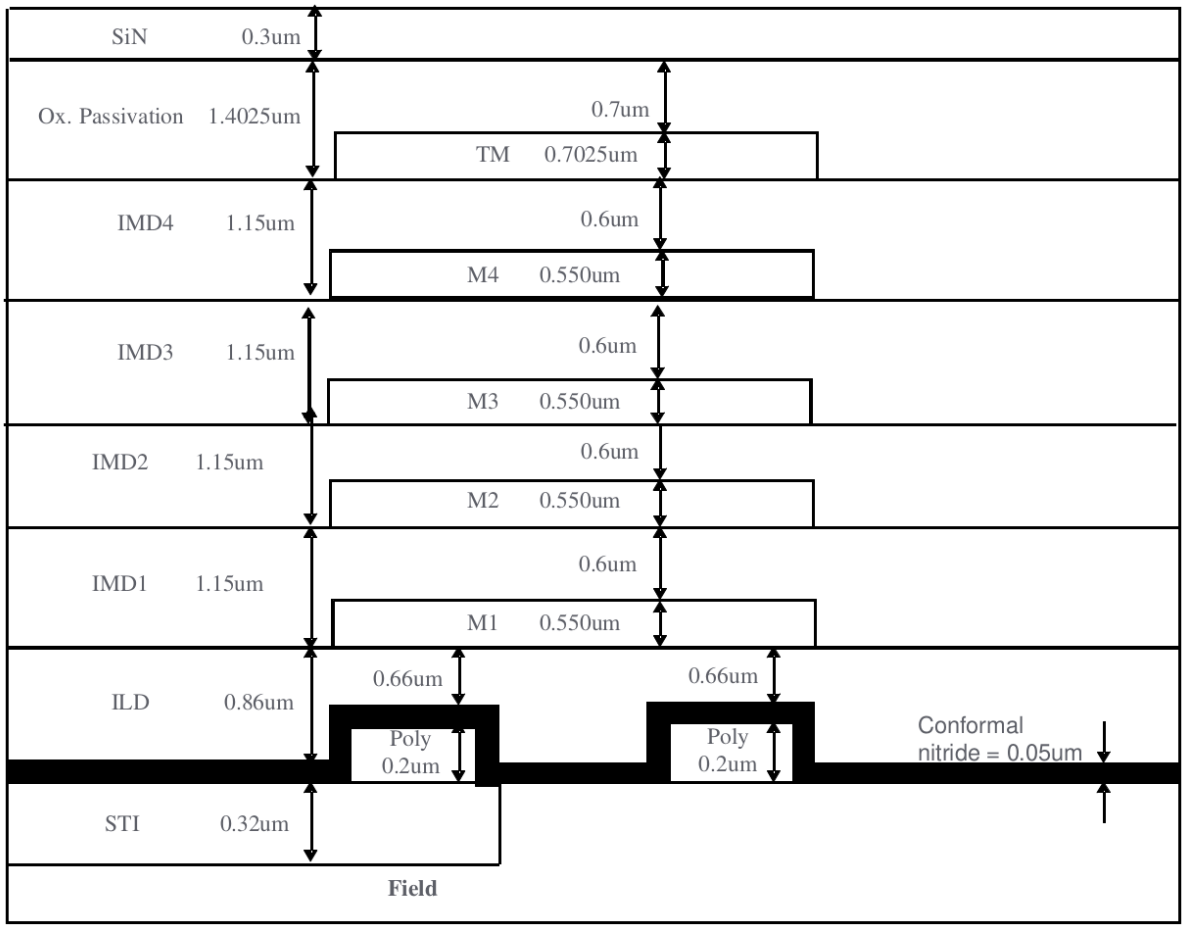

3.10 1P5M (TM 6KA with MIM) Structure

MIM was placed in between Metal2 and Metal3; SIN=0.042um for 1.5fF, SIN=0.062um for 1.0fF

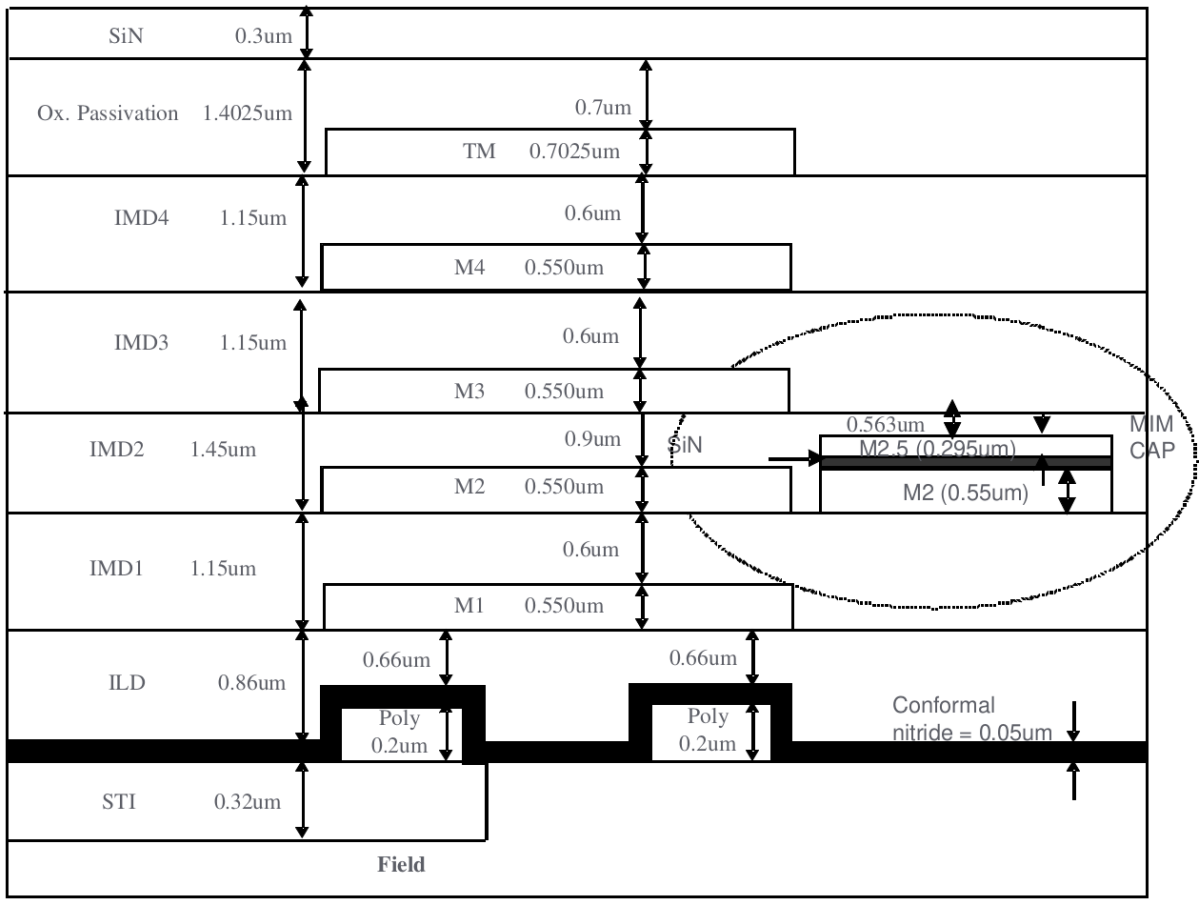
SiN 0.3um
Ox. Passivation 1.4025um
0.7um
TM 0.7025um
IMD4 1.15um
0.6um
M4 0.550um
IMD3 1.15um
0.6um
M3 0.550um
IMD2 1.45um
0.9um
SiN
0.563um
M2.5 (0.295um)
MIM CAP
M2 0.550um
M2 (0.55um)
IMD1 1.15um
0.6um
M1 0.550um
ILD 0.86um
0.66um
0.66um
Poly 0.2um
Poly 0.2um
Conformal nitride = 0.05um
STI 0.32um
Field

3.11 1P5M (TM 9KA without MIM) Structure

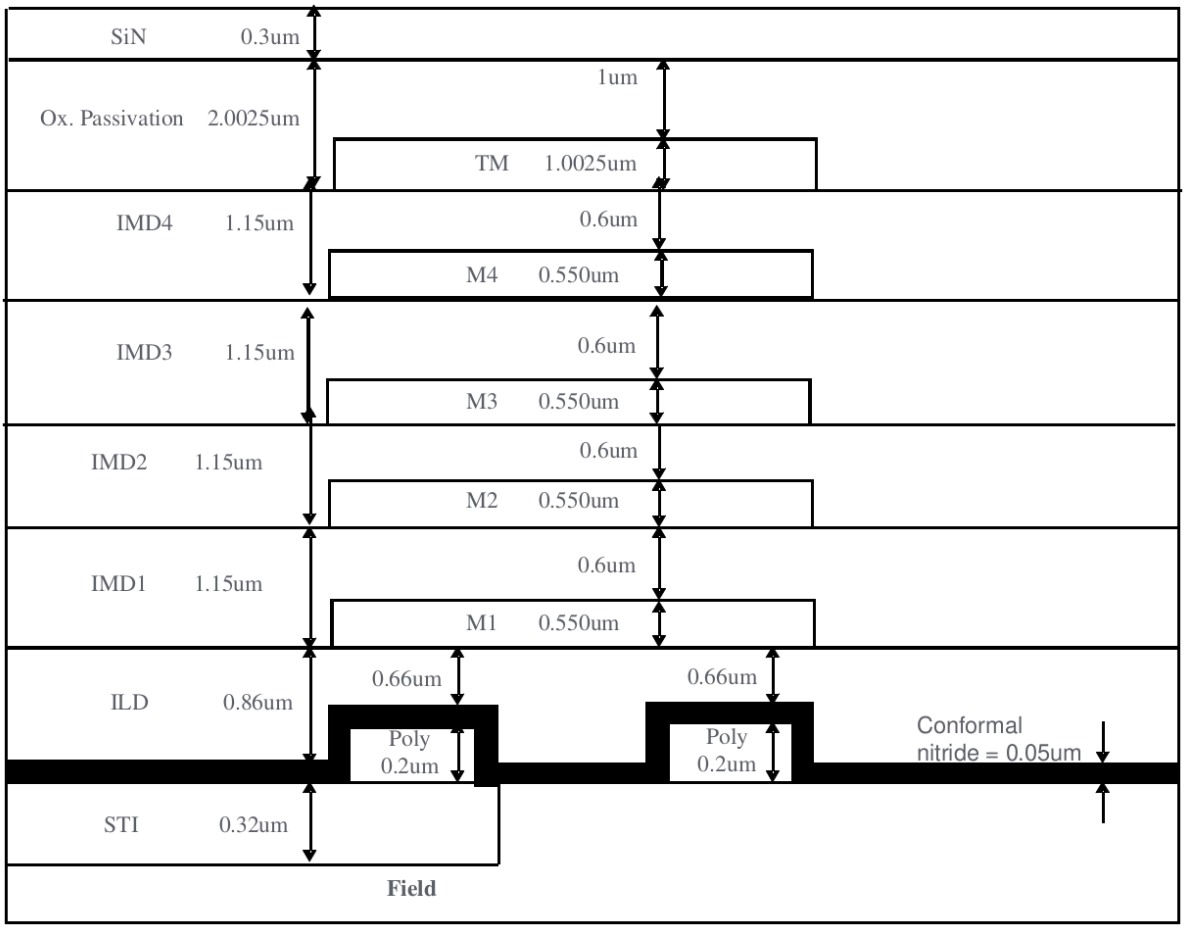

3.12 1P5M (TM 9KA with MIM) Structure

MIM was placed in between Metal2 and Metal3; SIN=0.042um for 1.5fF, SIN=0.062um for 1.0fF

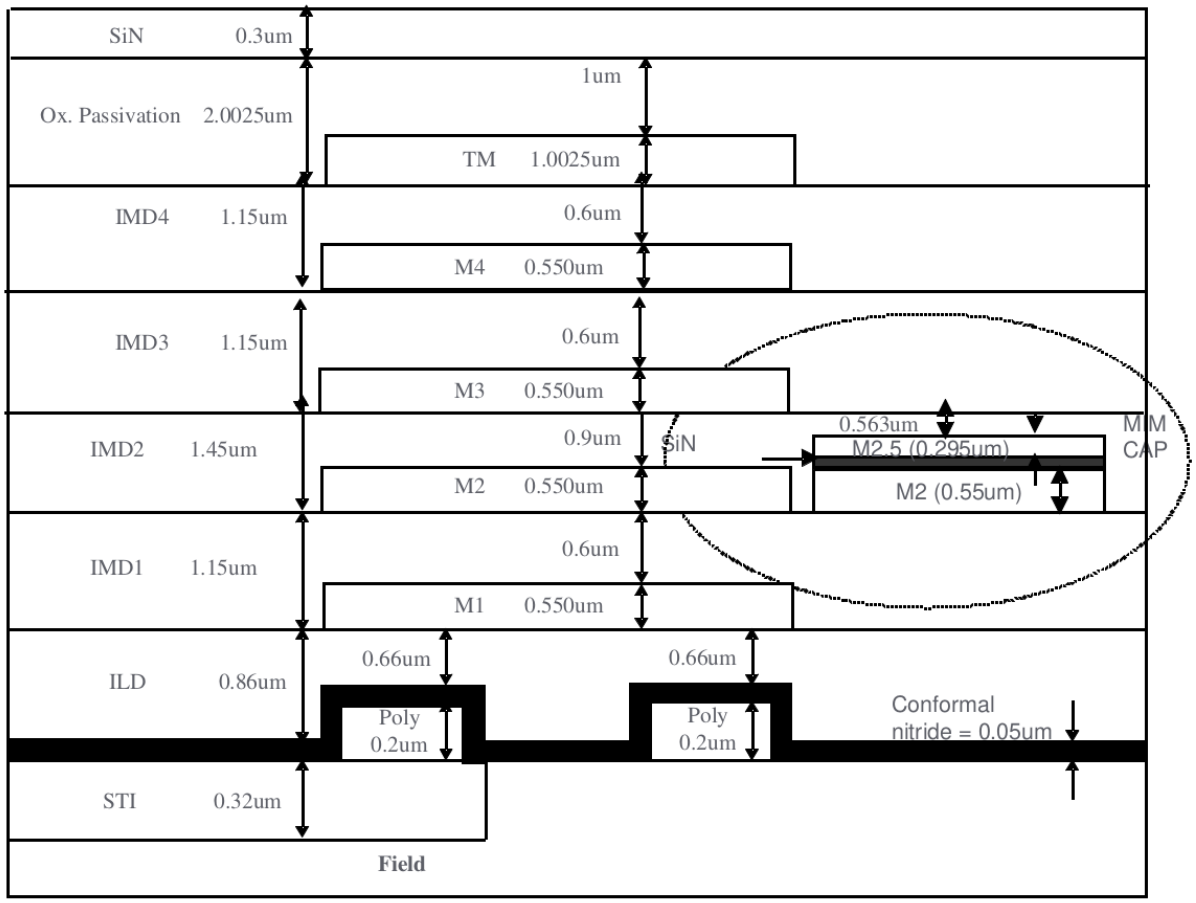
SiN 0.3um
Ox. Passivation 2.0025um
1um
TM 1.0025um
IMD4 1.15um
0.6um
M4 0.550um
IMD3 1.15um
0.6um
M3 0.550um
IMD2 1.45um
0.9um
SiN
0.563um
M2.5 (0.295um)
MIM CAP
M2 0.550um
M2 (0.55um)
IMD1 1.15um
0.6um
M1 0.550um
ILD 0.86um
0.66um
0.66um
Poly 0.2um
Poly 0.2um
Conformal nitride = 0.05um
STI 0.32um
Field

3.13 1P6M (TM 6KA without MIM) Structure

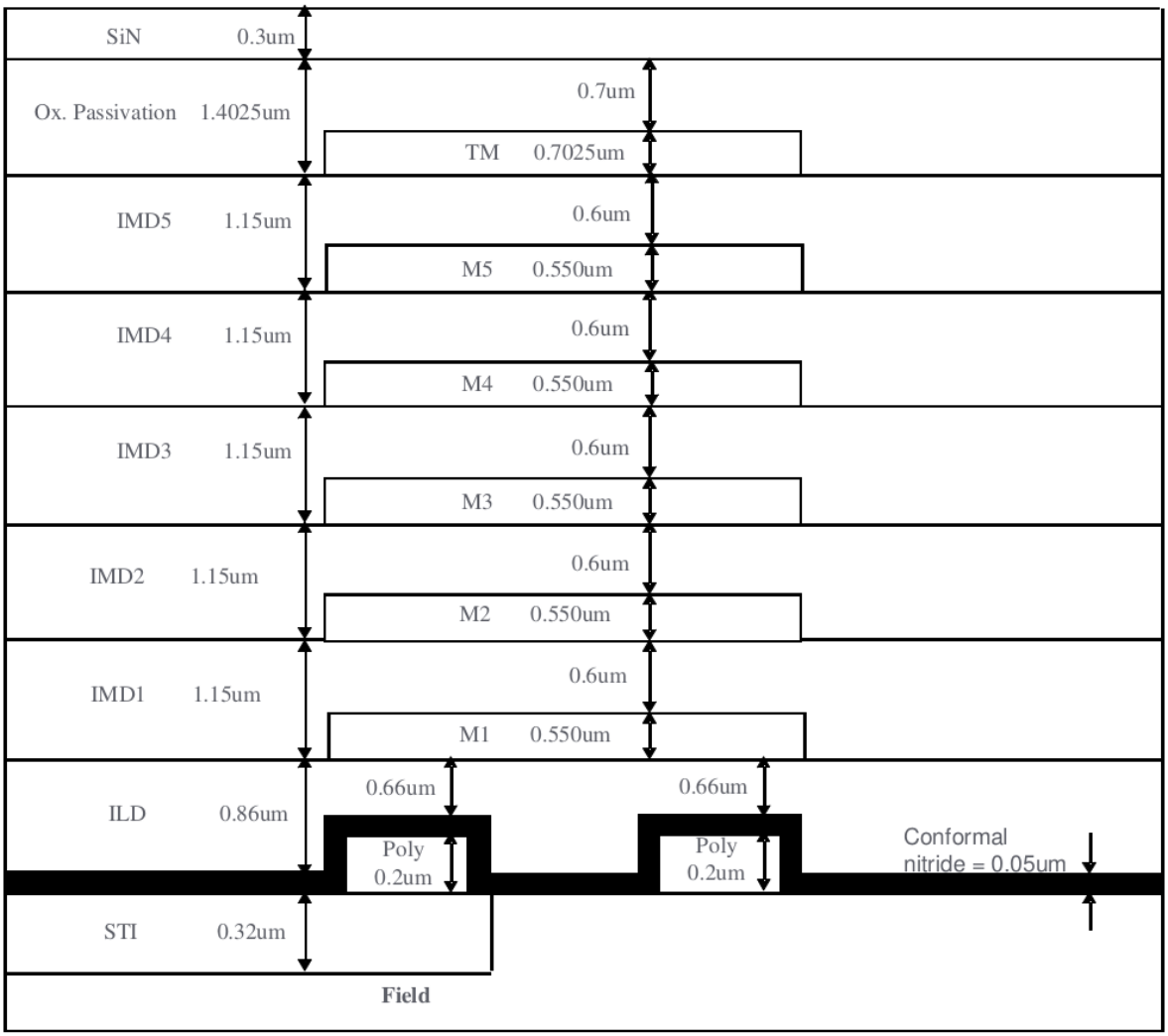

3.14 1P6M (TM 6KA with MIM) Structure

MIM was placed in between Metal2 and Metal3; SIN=0.042um for 1.5fF, SIN=0.062um for 1.0fF

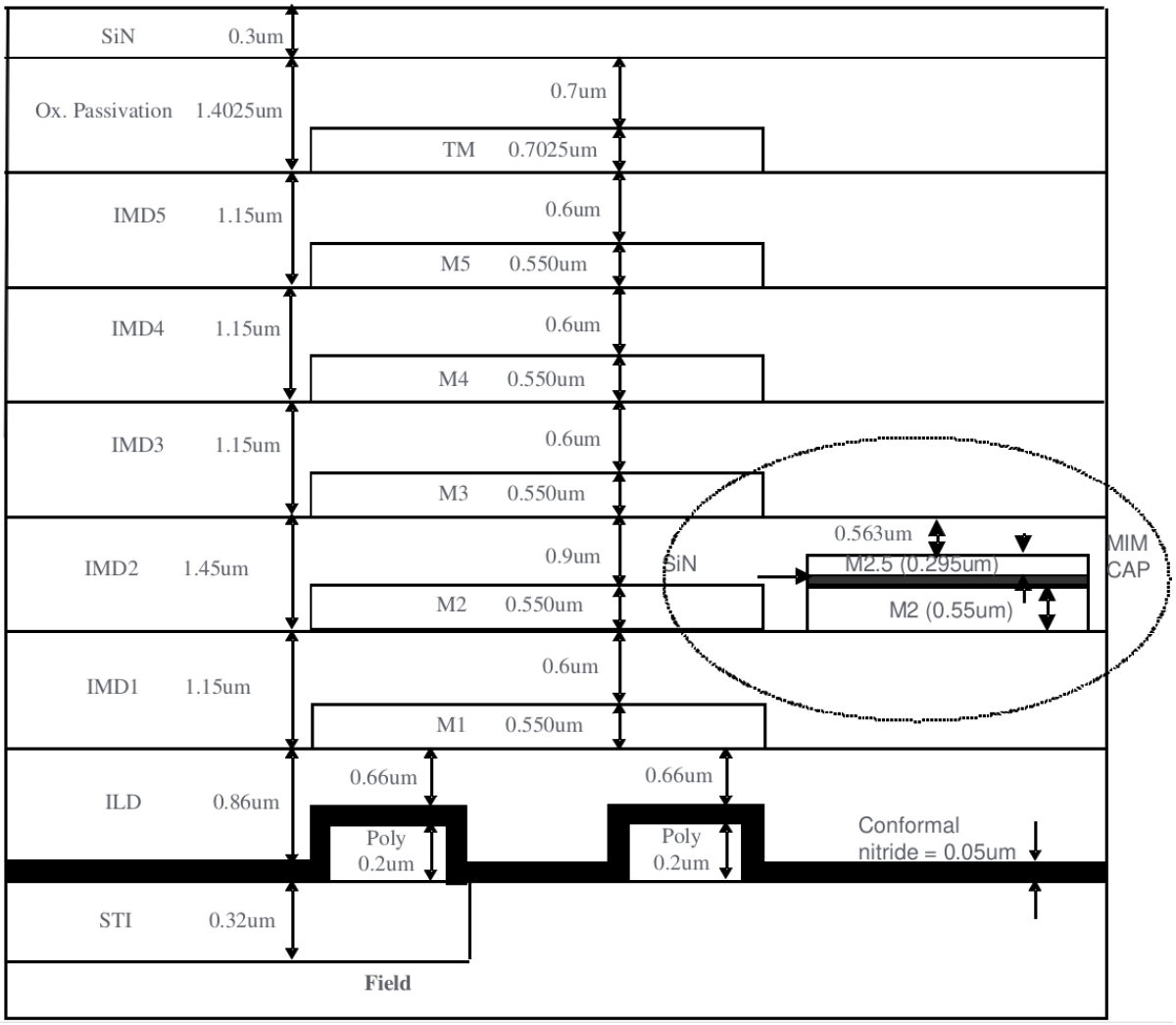
SiN 0.3um
Ox. Passivation 1.4025um
0.7um
TM 0.7025um
IMD5 1.15um
0.6um
M5 0.550um
IMD4 1.15um
0.6um
M4 0.550um
IMD3 1.15um
0.6um
M3 0.550um
IMD2 1.45um
0.9um
M2 0.550um
0.563um
SiN
M2.5 (0.295um)
M2 (0.55um)
MIM CAP
IMD1 1.15um
0.6um
M1 0.550um
ILD 0.86um
0.66um
Poly 0.2um
0.66um
Poly 0.2um
Conformal nitride = 0.05um
STI 0.32um
Field

3.15 1P6M (TM 9KA without MIM) Structure

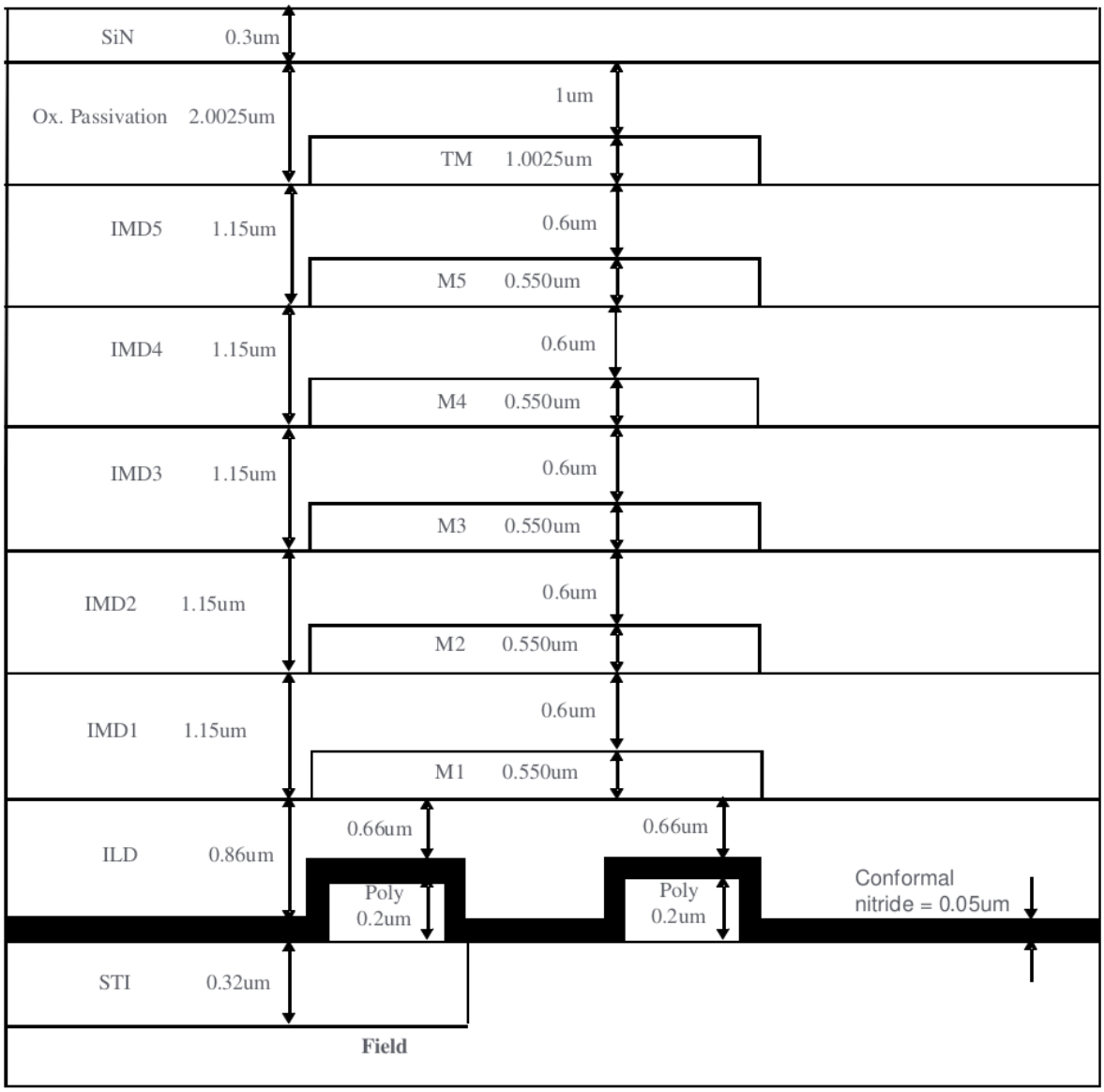

3.16 1P6M (TM 9KA with MIM) Structure

MIM was placed in between Metal2 and Metal3; SIN=0.042um for 1.5fF, SIN=0.062um for 1.0fF

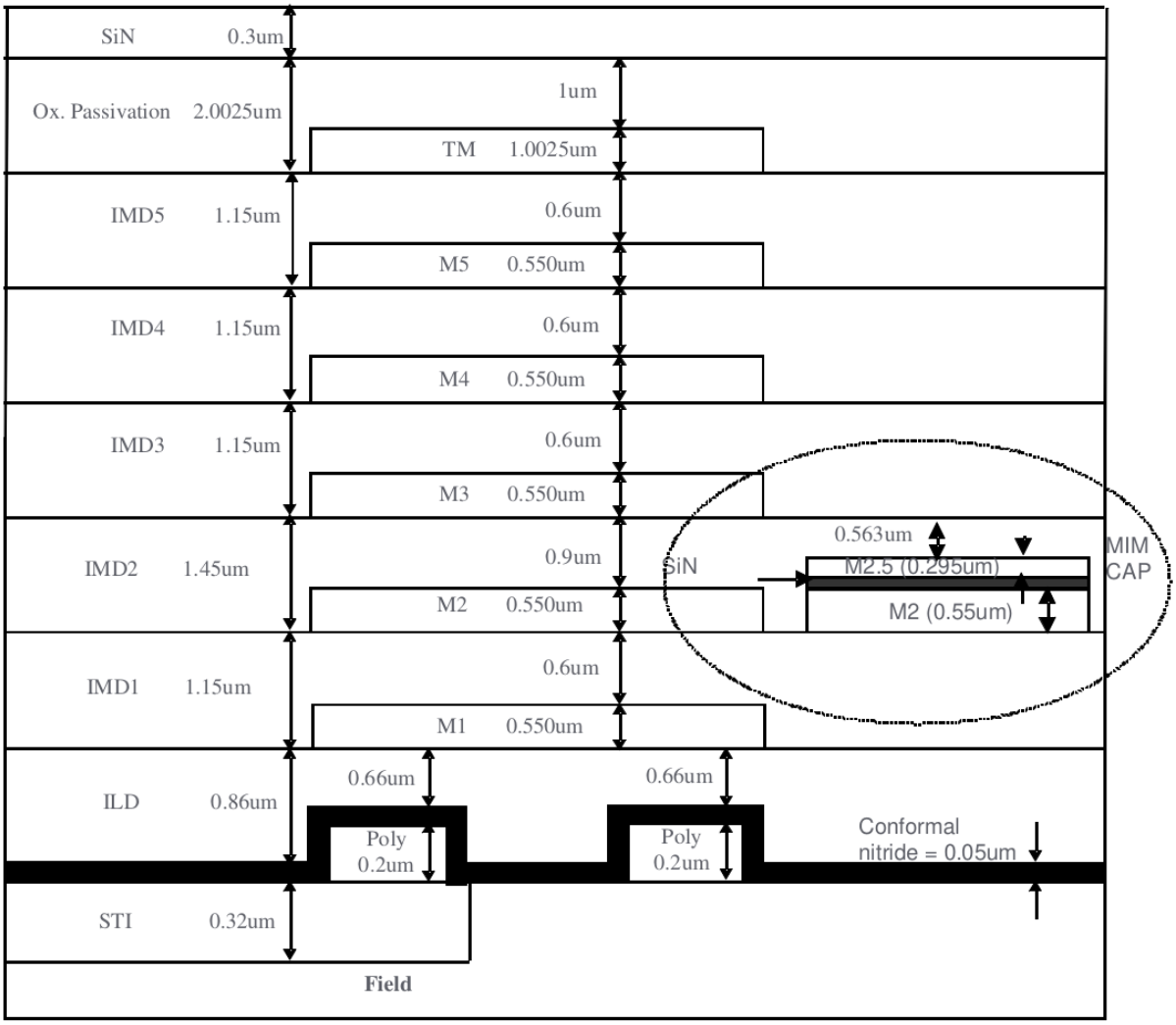

3.17 1P4M (TM 6KA with MIM Option B) Structure

MIM was placed in between Metal3 and Metal4 (TOP Metal); SIN=0.042um for 1.5fF, SIN=0.062um for 1.0fF

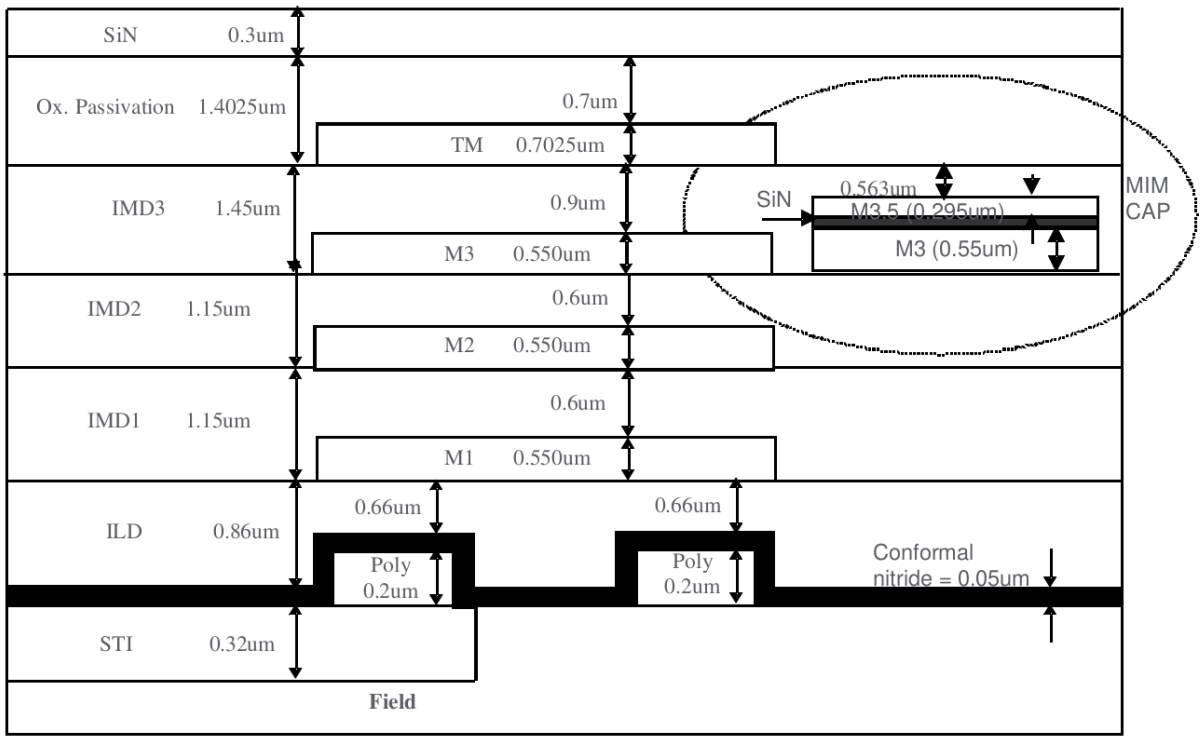

3.18 1P4M (TM 9KA with MIM Option B) Structure

MIM was placed in between Metal3 and Metal4 (TOP Metal); SIN=0.042um for 1.5fF, SIN=0.062um for 1.0fF

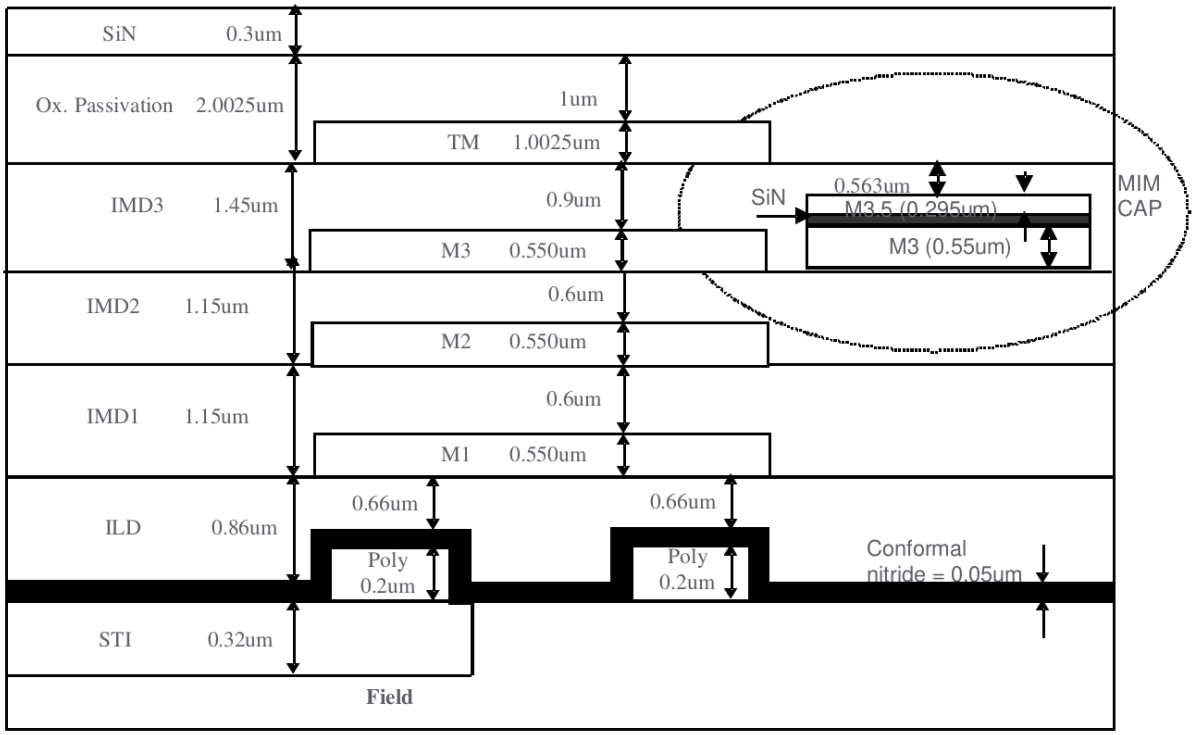

3.19 1P5M (TM 6KA with MIM Option B) Structure

MIM was placed in between Metal4 and Metal5 (TOP Metal); SIN=0.042um for 1.5fF, SIN=0.062um for 1.0fF

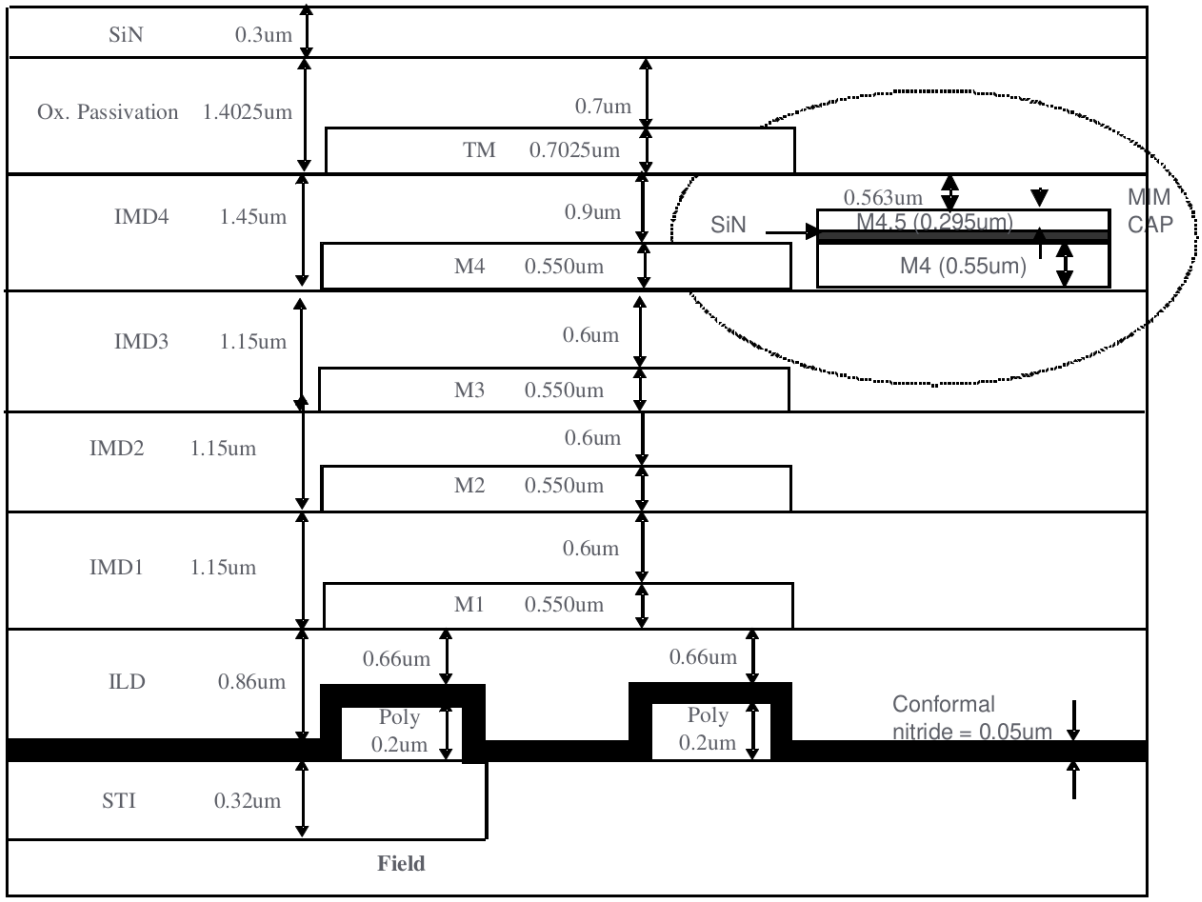

3.20 1P5M (TM 9KA with MIM Option B) Structure

MIM was placed in between Metal4 and Metal5 (TOP Metal); SIN=0.042um for 1.5fF, SIN=0.062um for 1.0fF

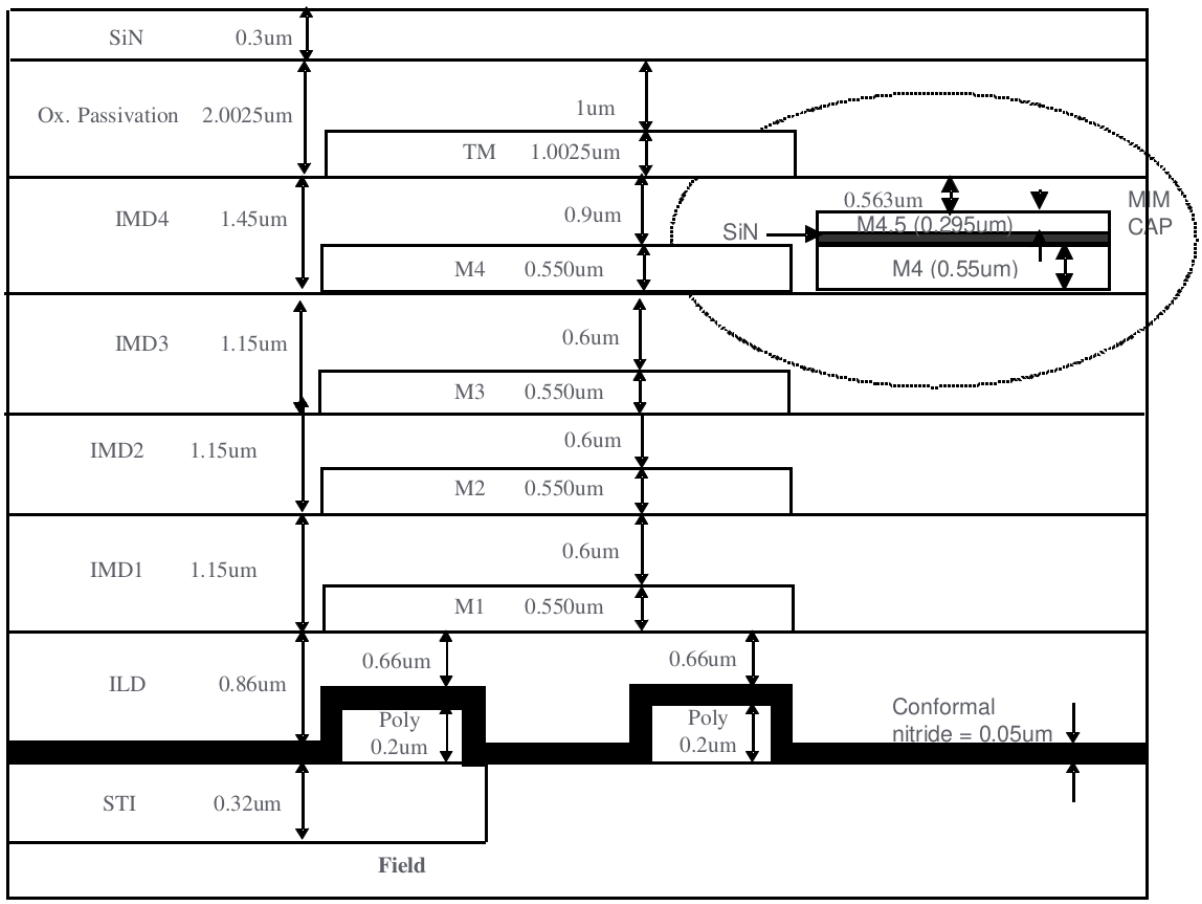

3.21 1P6M (TM 6KA with MIM Option B) Structure

MIM was placed in between Metal5 and Metal6 (TOP Metal); SIN=0.042um for 1.5fF, SIN=0.062um for 1.0fF

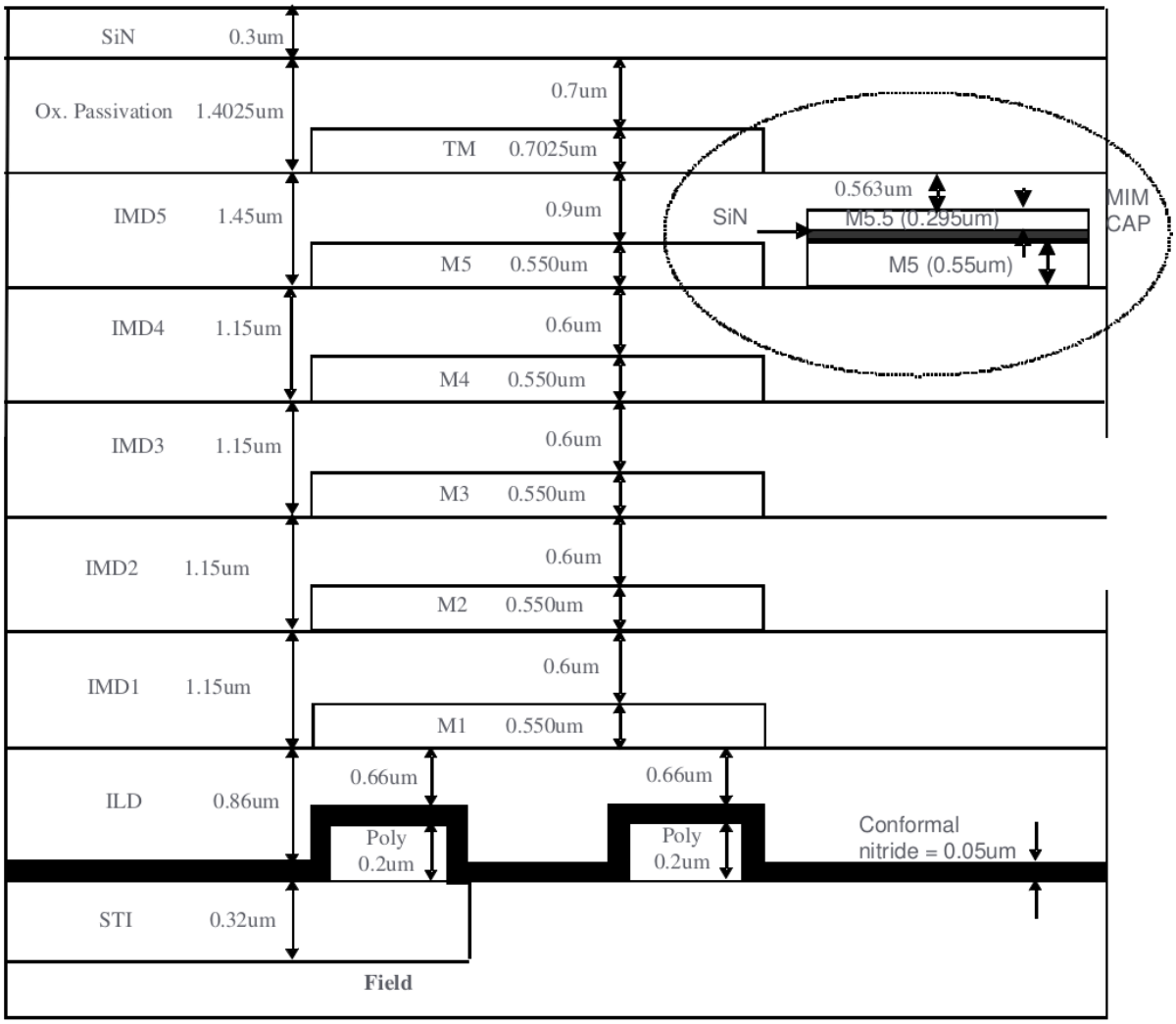

3.22 1P6M (TM 9KA with MIM Option B) Structure

MIM was placed in between Metal5 and Metal6 (TOP Metal); SIN=0.042um for 1.5fF, SIN=0.062um for 1.0fF

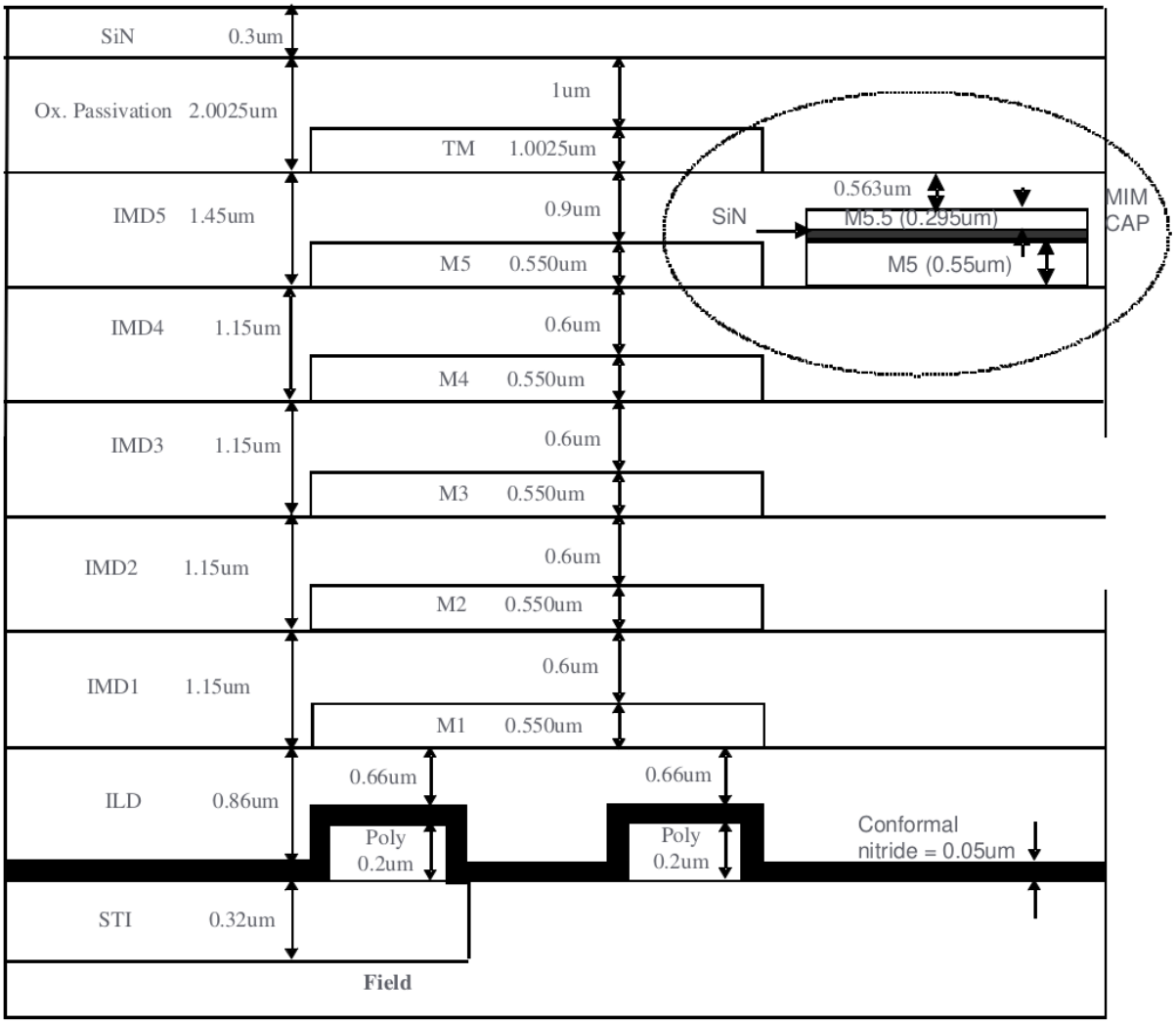
SiN 0.3um
Ox. Passivation 2.0025um
1um
TM 1.0025um
IMD5 1.45um
0.9um
M5 0.550um
0.563um
SiN
M5.5 (0.295um)
M5 (0.55um)
MIM CAP
IMD4 1.15um
0.6um
M4 0.550um
IMD3 1.15um
0.6um
M3 0.550um
IMD2 1.15um
0.6um
M2 0.550um
IMD1 1.15um
0.6um
M1 0.550um
ILD 0.86um
0.66um
Poly 0.2um
0.66um
Poly 0.2um
Conformal nitride = 0.05um
STI 0.32um
Field

3.23 1P3M (TM 30KA without MIM) Structure

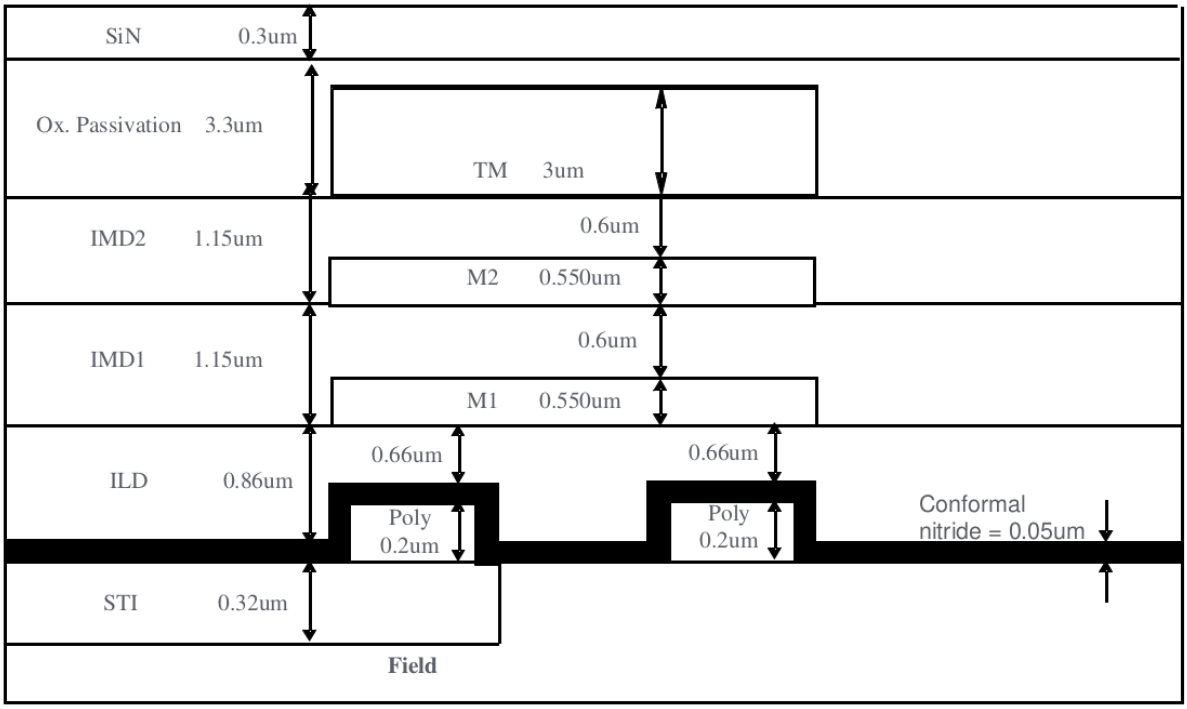

3.24 1P3M (TM 30KA with MIM) Structure

MIM was placed in between Metal2 and Metal3 (Top Metal); SIN=0.042um for 1.5fF, SIN=0.062um for 1.0fF

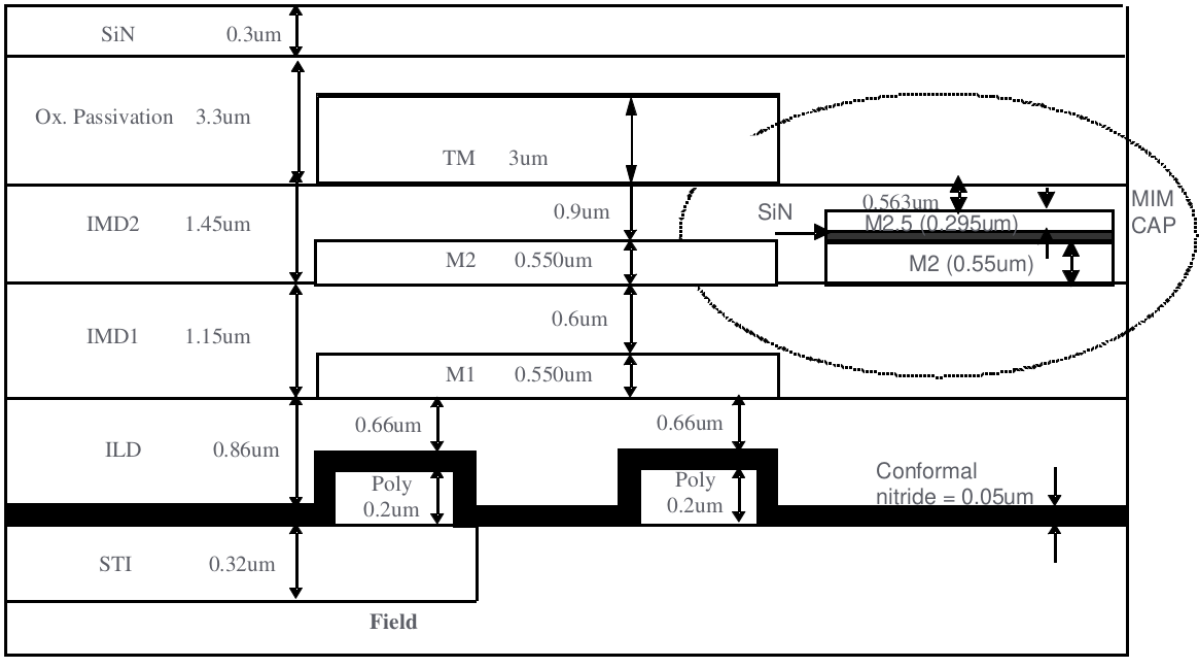

3.25 1P4M (TM 30KA without MIM) Structure

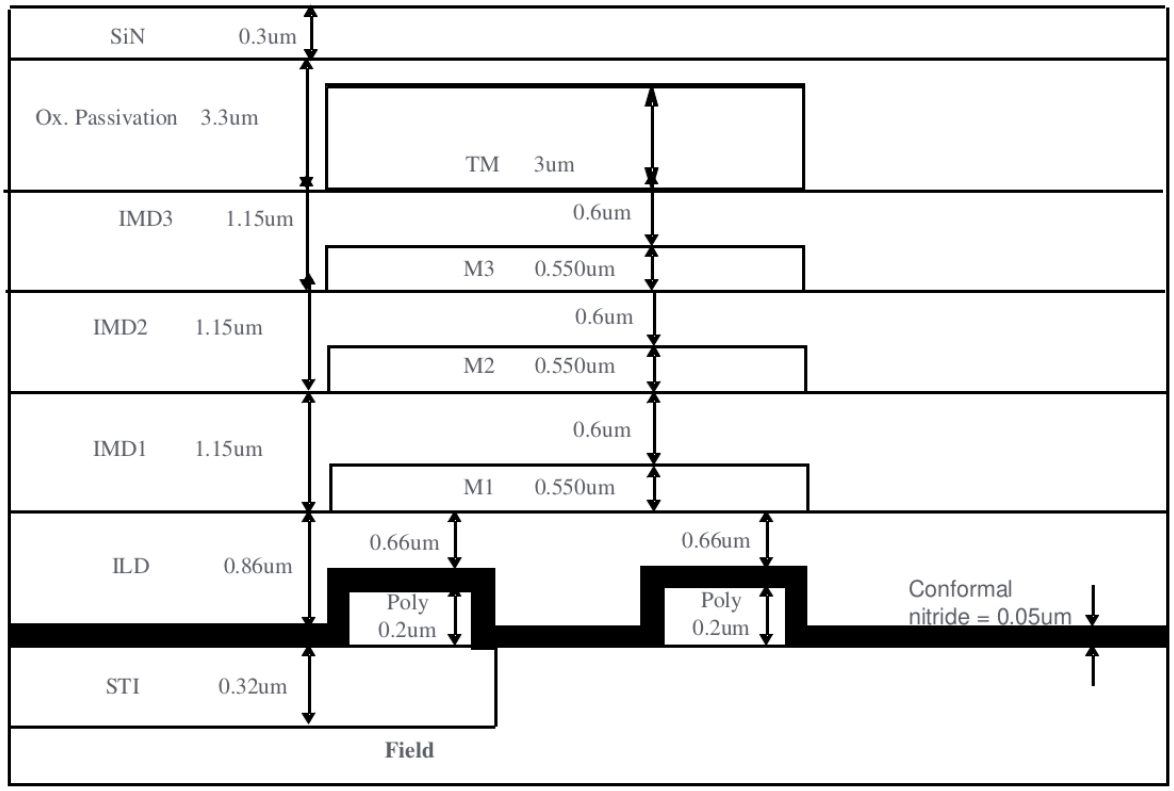

3.26 1P4M (TM 30KA with MIM) Structure

MIM was placed in between Metal2 and Metal3; SIN=0.042um for 1.5fF, SIN=0.062um for 1.0fF

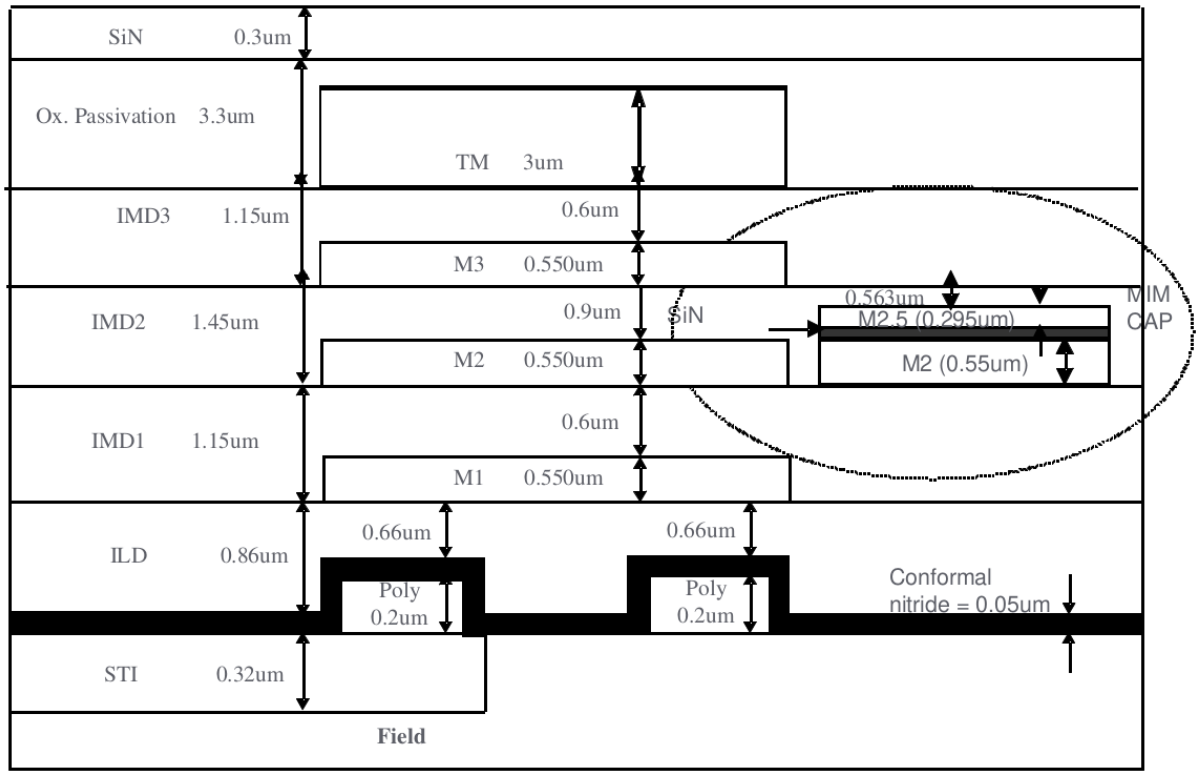

3.27 1P4M (TM 30KA with MIM Option B) Structure

MIM was placed in between Metal3 and Metal4 (TOP Metal); SIN=0.042um for 1.5fF, SIN=0.062um for 1.0fF

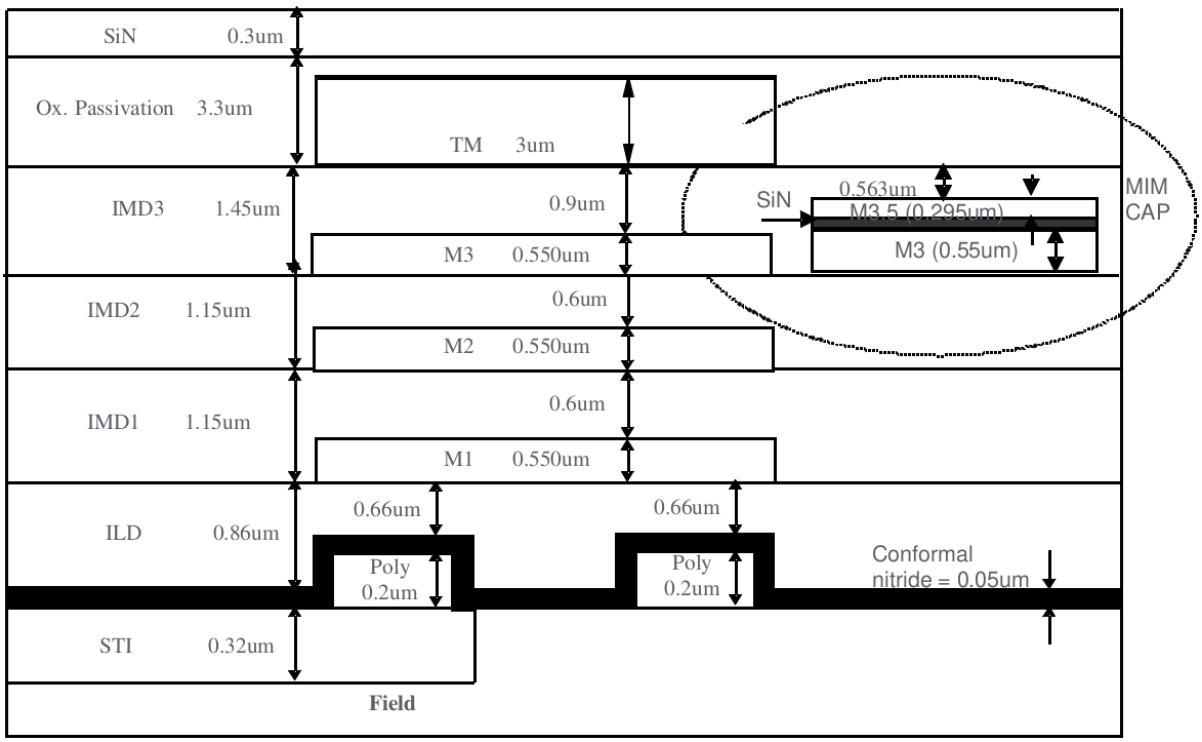

3.28 1P5M (TM 30KA without MIM) Structure

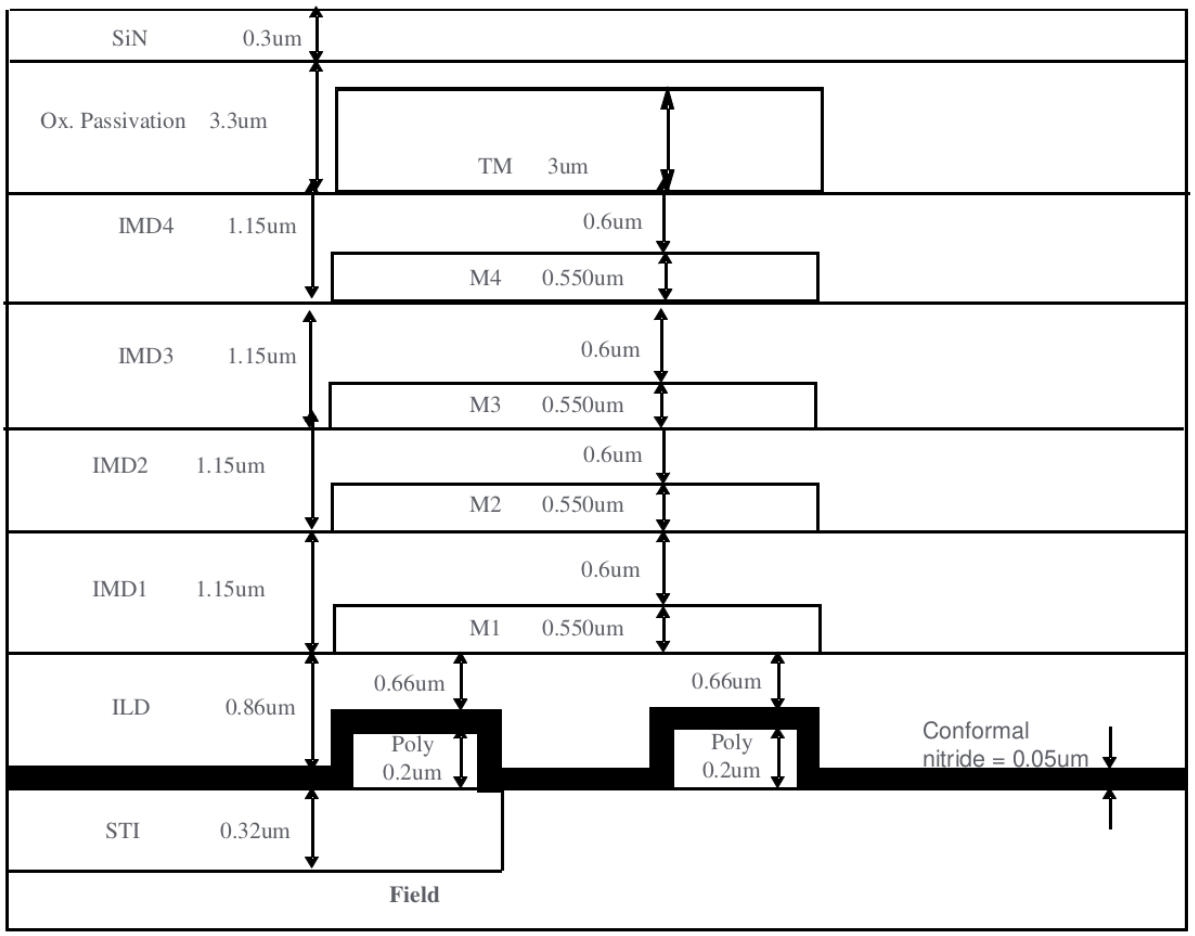

3.29 1P5M (TM 30KA with MIM) Structure

MIM was placed in between Metal2 and Metal3; SIN=0.042um for 1.5fF, SIN=0.062um for 1.0fF

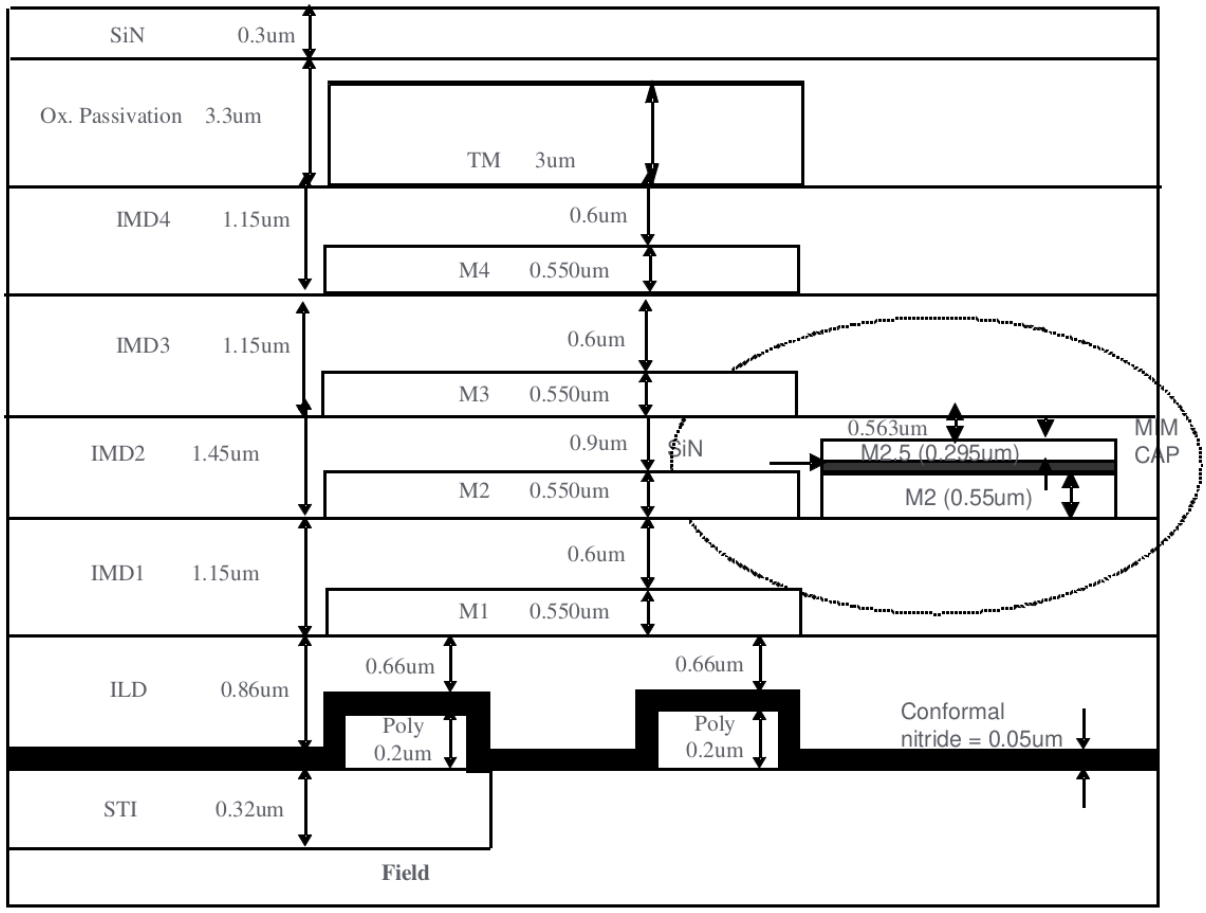

3.30 1P5M (TM 30KA with MIM Option B) Structure

MIM was placed in between Metal4 and Metal5 (TOP Metal); SIN=0.042um for 1.5fF, SIN=0.062um for 1.0fF

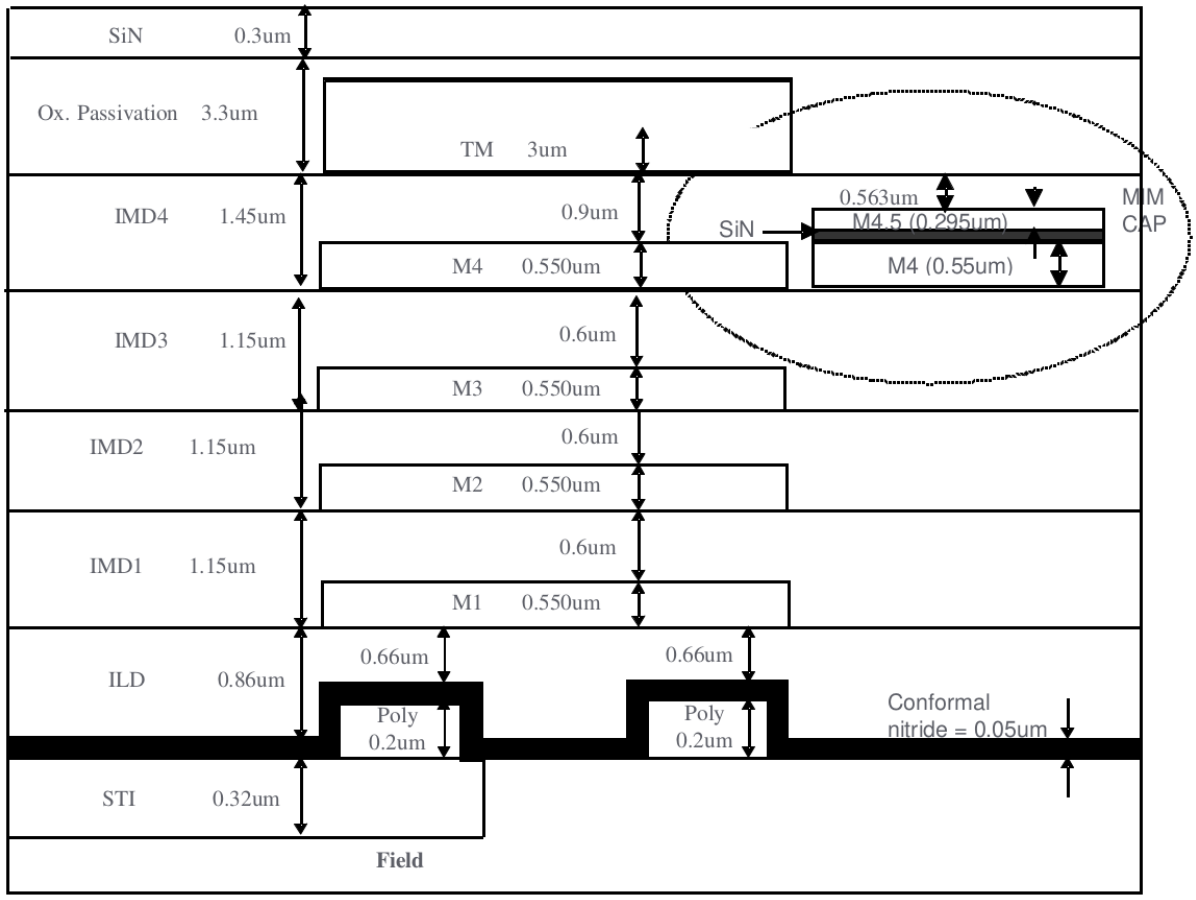
SiN 0.3um
Ox. Passivation 3.3um
TM 3um
IMD4 1.45um
0.9um
0.563um
MIM CAP
SiN
M4.5 (0.295um)
M4 0.550um
M4 (0.55um)
IMD3 1.15um
0.6um
M3 0.550um
IMD2 1.15um
0.6um
M2 0.550um
IMD1 1.15um
0.6um
M1 0.550um
ILD 0.86um
0.66um
0.66um
Poly 0.2um
Poly 0.2um
Conformal nitride = 0.05um
STI 0.32um
Field

3.31 1P6M (TM 30KA without MIM) Structure

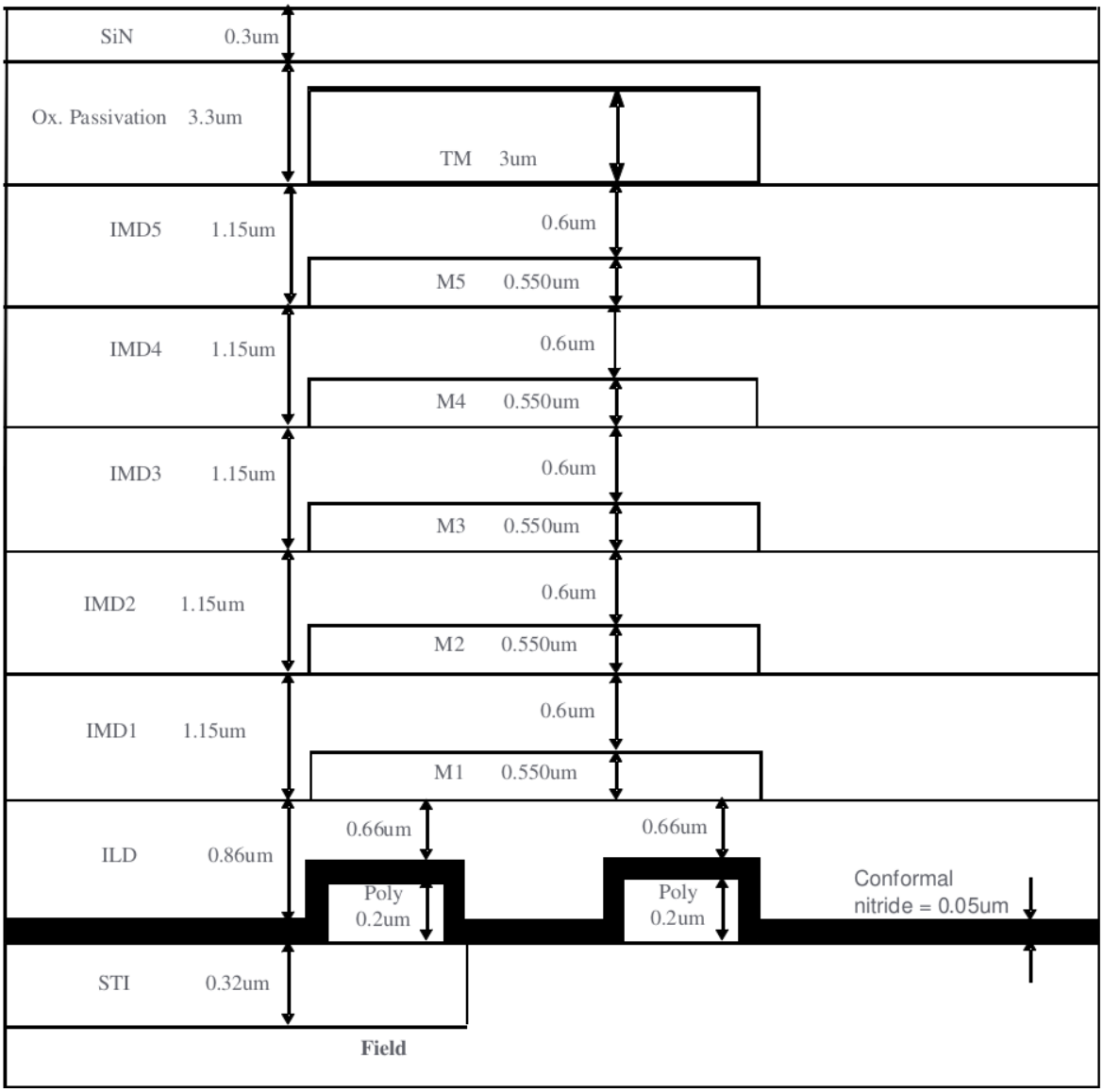

3.32 1P6M (TM 30KA with MIM) Structure

MIM was placed in between Metal2 and Metal3; SIN=0.042um for 1.5fF, SIN=0.062um for 1.0fF

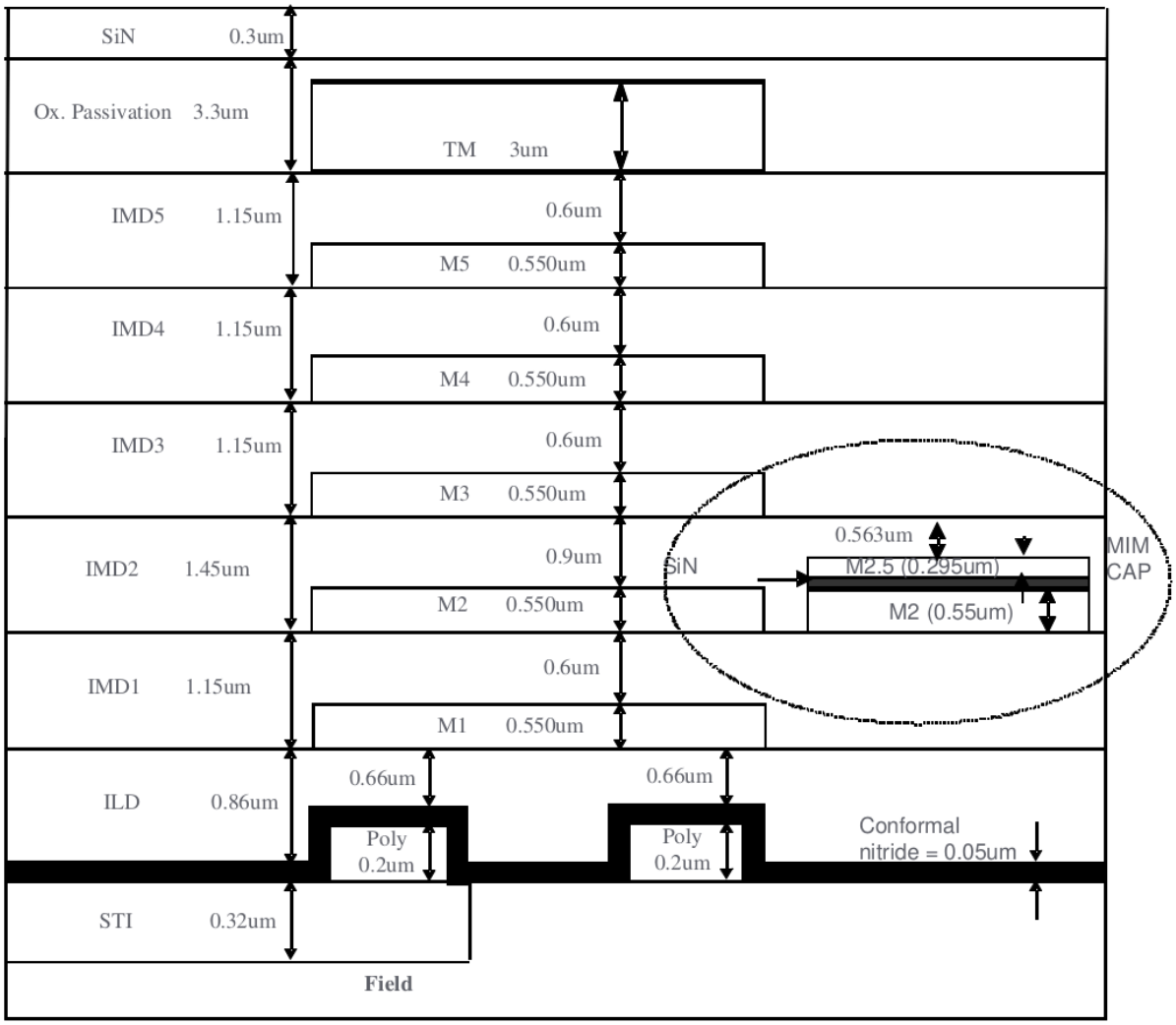

3.33 1P6M (TM 30KA with MIM Option B) Structure

MIM was placed in between Metal5 and Metal6 (TOP Metal); SIN=0.042um for 1.5fF, SIN=0.062um for 1.0fF

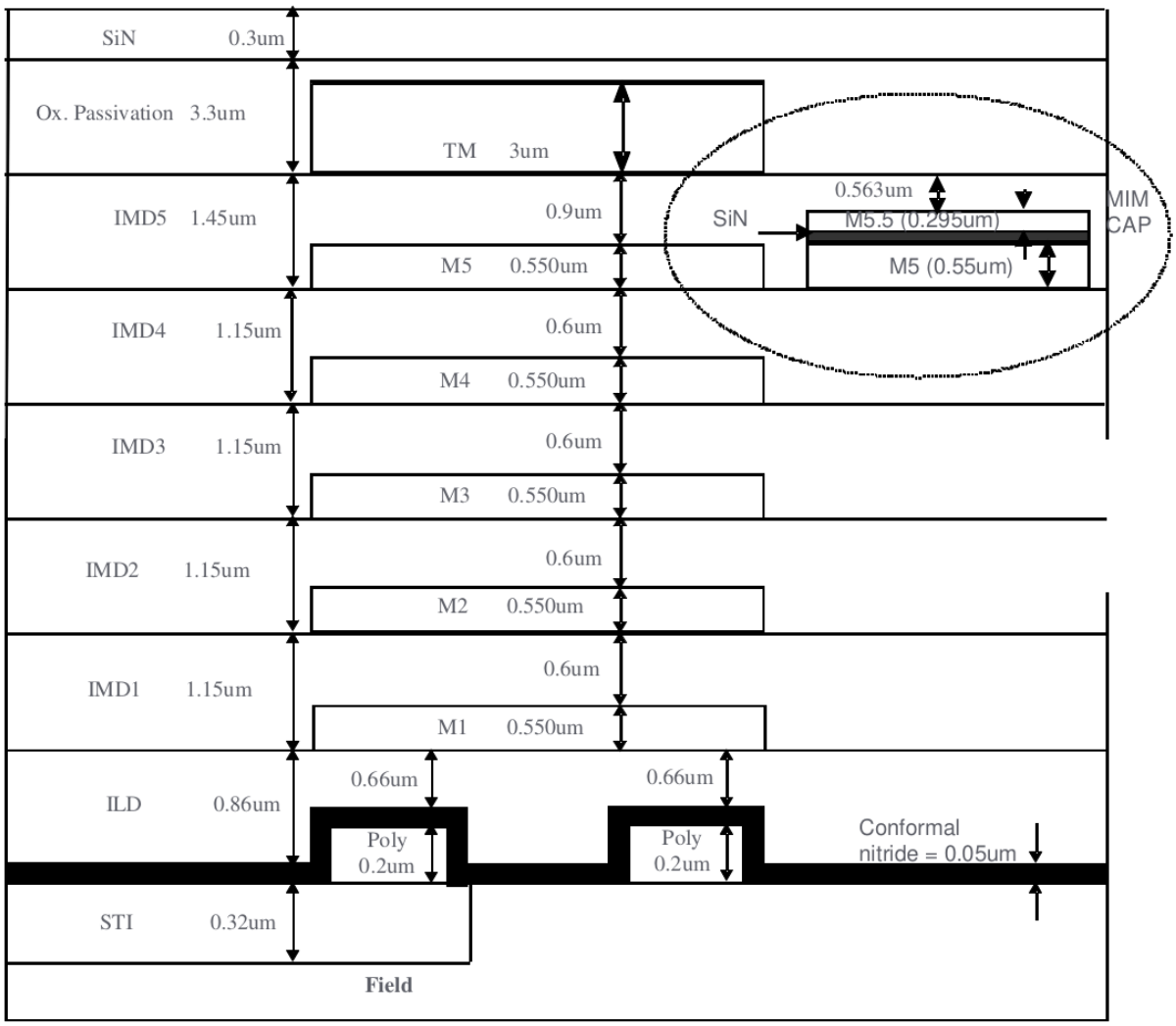
SiN 0.3um
Ox. Passivation 3.3um
TM 3um
IMD5 1.45um
0.9um
M5 0.550um
0.563um
SiN
M5.5 (0.295um)
M5 (0.55um)
MIM CAP
IMD4 1.15um
0.6um
M4 0.550um
IMD3 1.15um
0.6um
M3 0.550um
IMD2 1.15um
0.6um
M2 0.550um
IMD1 1.15um
0.6um
M1 0.550um
ILD 0.86um
0.66um
Poly 0.2um
0.66um
Poly 0.2um
Conformal nitride = 0.05um
STI 0.32um
Field

3.34 1P3M (TM 11KA without MIM) Structure

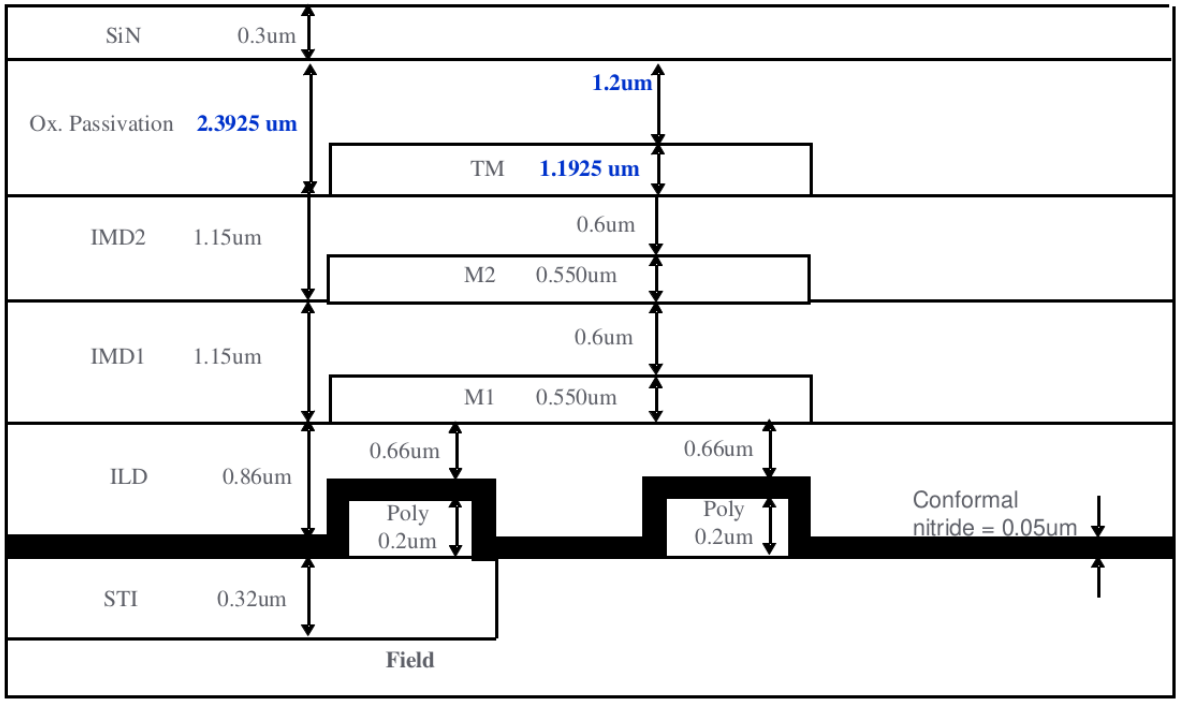

3.35 1P3M (TM 11KA with MIM) Structure

MIM was placed in between Metal2 and Metal3 (Top Metal); SIN=0.042um for 1.5fF, SIN=0.062um for 1.0fF

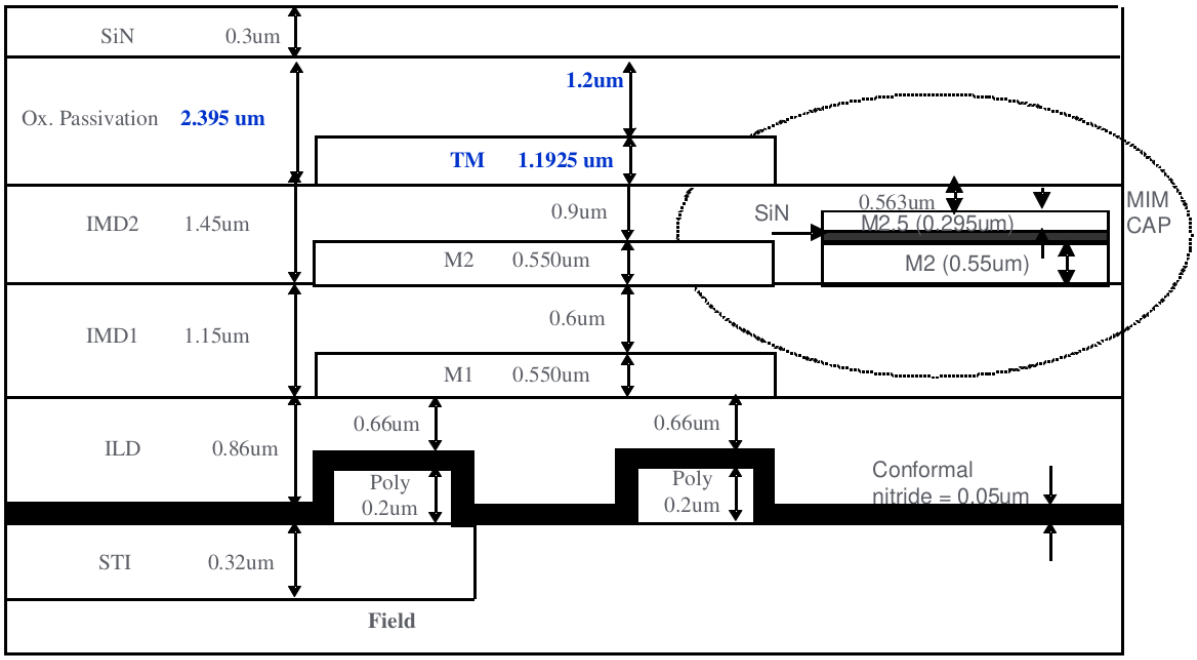

3.36 1P4M (TM 11KA without MIM) Structure

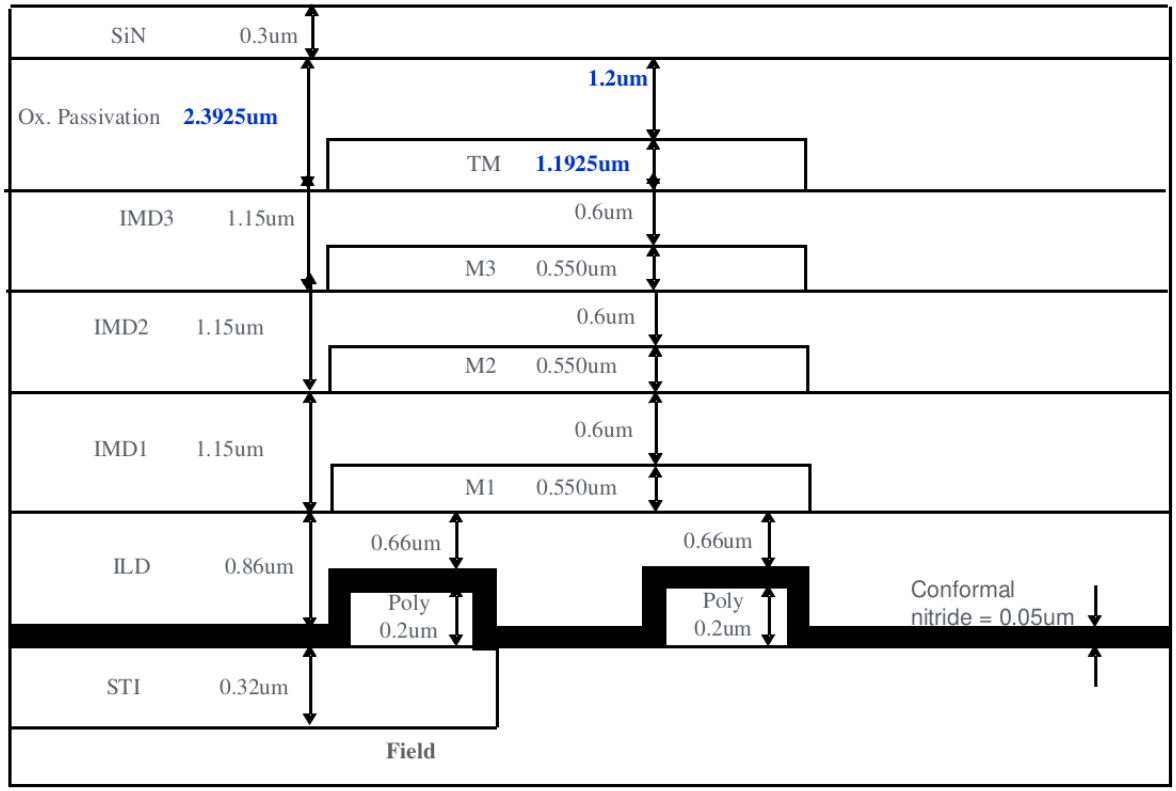

3.37 1P4M (TM 11KA with MIM) Structure

MIM was placed in between Metal2 and Metal3; SIN=0.042um for 1.5fF, SIN=0.062um for 1.0fF

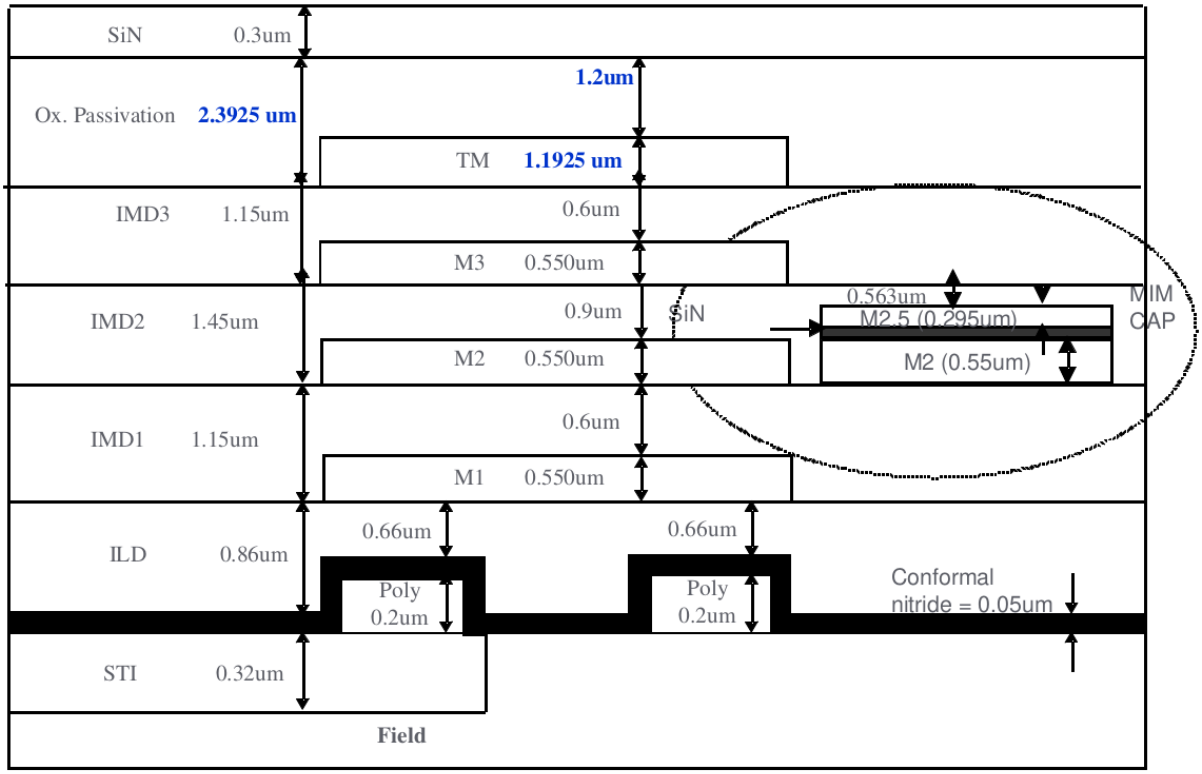
SiN 0.3um
Ox. Passivation 2.3925 um
1.2um
TM 1.1925 um
IMD3 1.15um
0.6um
M3 0.550um
IMD2 1.45um
0.9um
SiN
0.563um
M2.5 (0.295um)
MIM CAP
M2 0.550um
M2 (0.55um)
IMD1 1.15um
0.6um
M1 0.550um
ILD 0.86um
0.66um
0.66um
Poly 0.2um
Poly 0.2um
Conformal nitride = 0.05um
STI 0.32um
Field

3.38 1P5M (TM 11KA without MIM) Structure

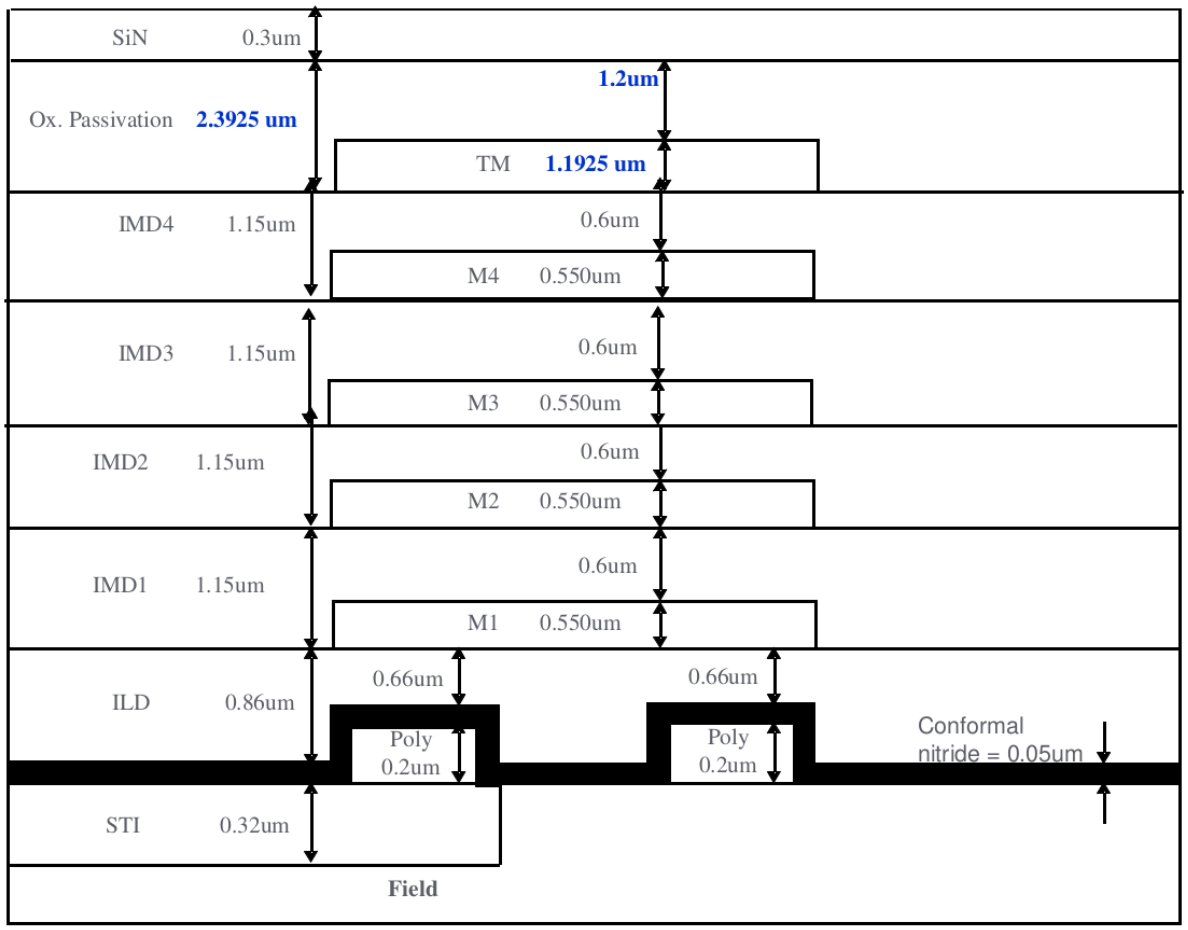

3.39 1P5M (TM 11KA with MIM) Structure

MIM was placed in between Metal2 and Metal3; SIN=0.042um for 1.5fF, SIN=0.062um for 1.0fF

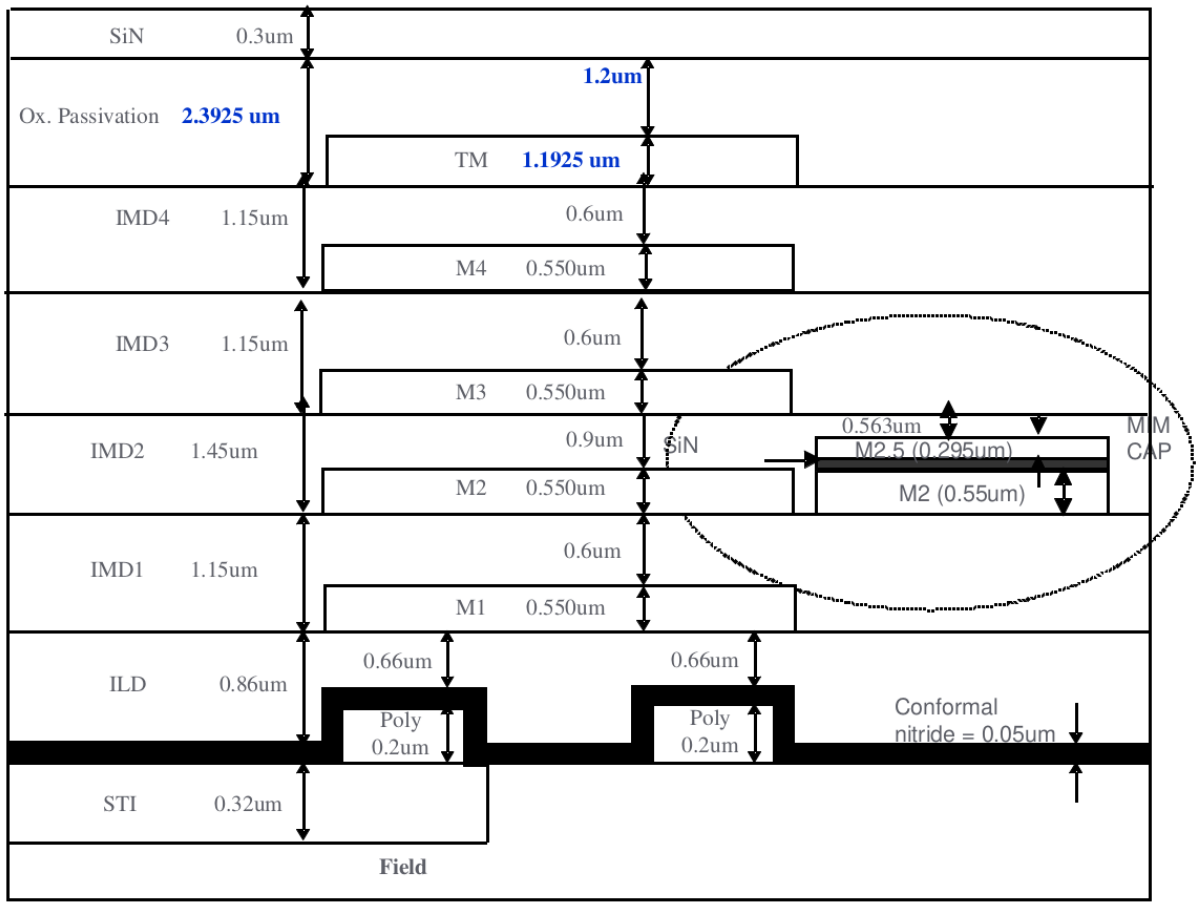
SiN 0.3um
1.2um
Ox. Passivation 2.3925 um
TM 1.1925 um
IMD4 1.15um
0.6um
M4 0.550um
IMD3 1.15um
0.6um
M3 0.550um
IMD2 1.45um
0.9um
SiN
0.563um
M2.5 (0.295um)
MIM CAP
M2 0.550um
M2 (0.55um)
IMD1 1.15um
0.6um
M1 0.550um
ILD 0.86um
0.66um
0.66um
Poly 0.2um
Poly 0.2um
Conformal nitride = 0.05um
STI 0.32um
Field

3.40 1P6M (TM 11KA without MIM) Structure

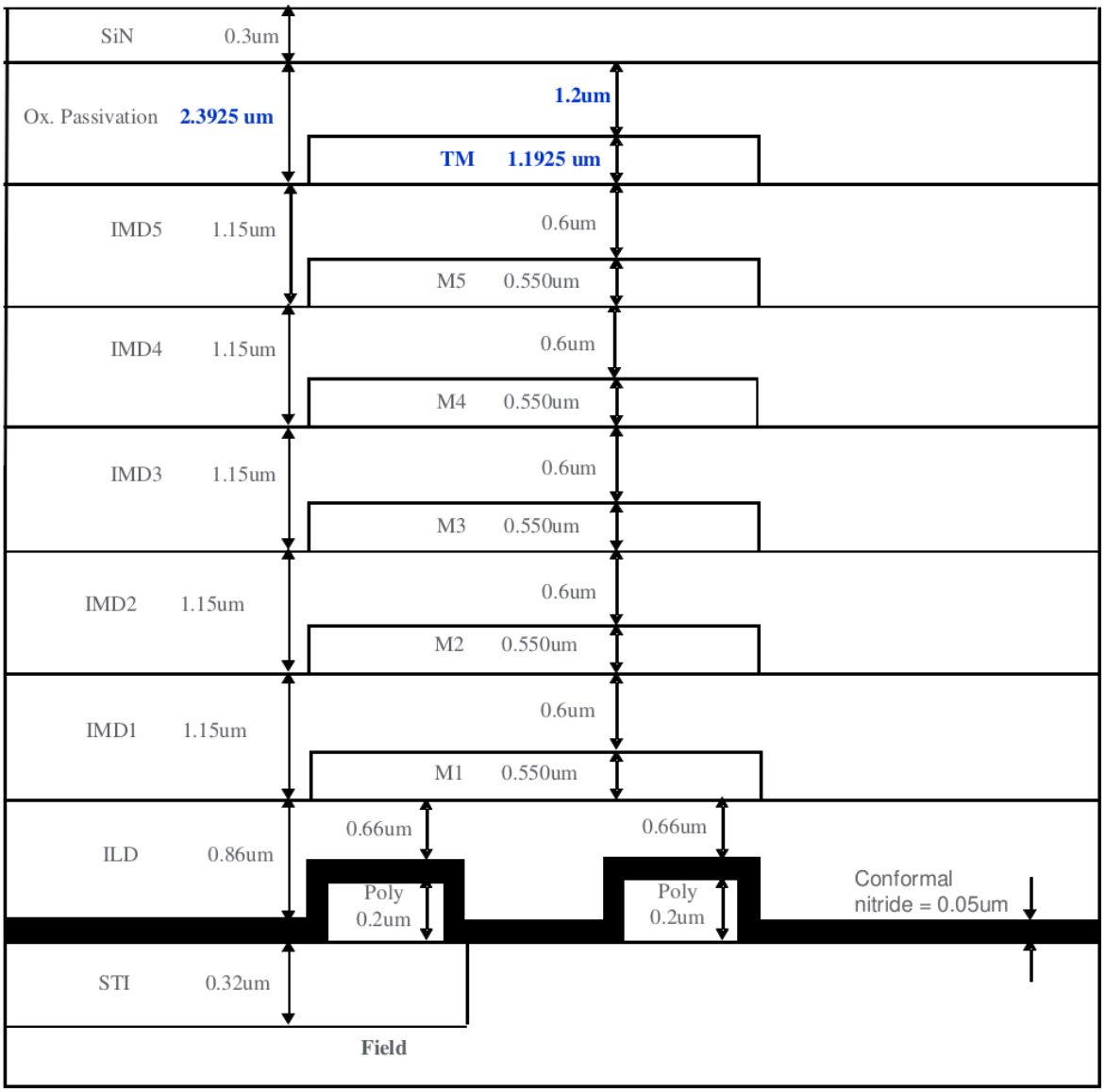

3.41 1P6M (TM 11KA with MIM) Structure

MIM was placed in between Metal2 and Metal3; SIN=0.042um for 1.5fF, SIN=0.062um for 1.0fF

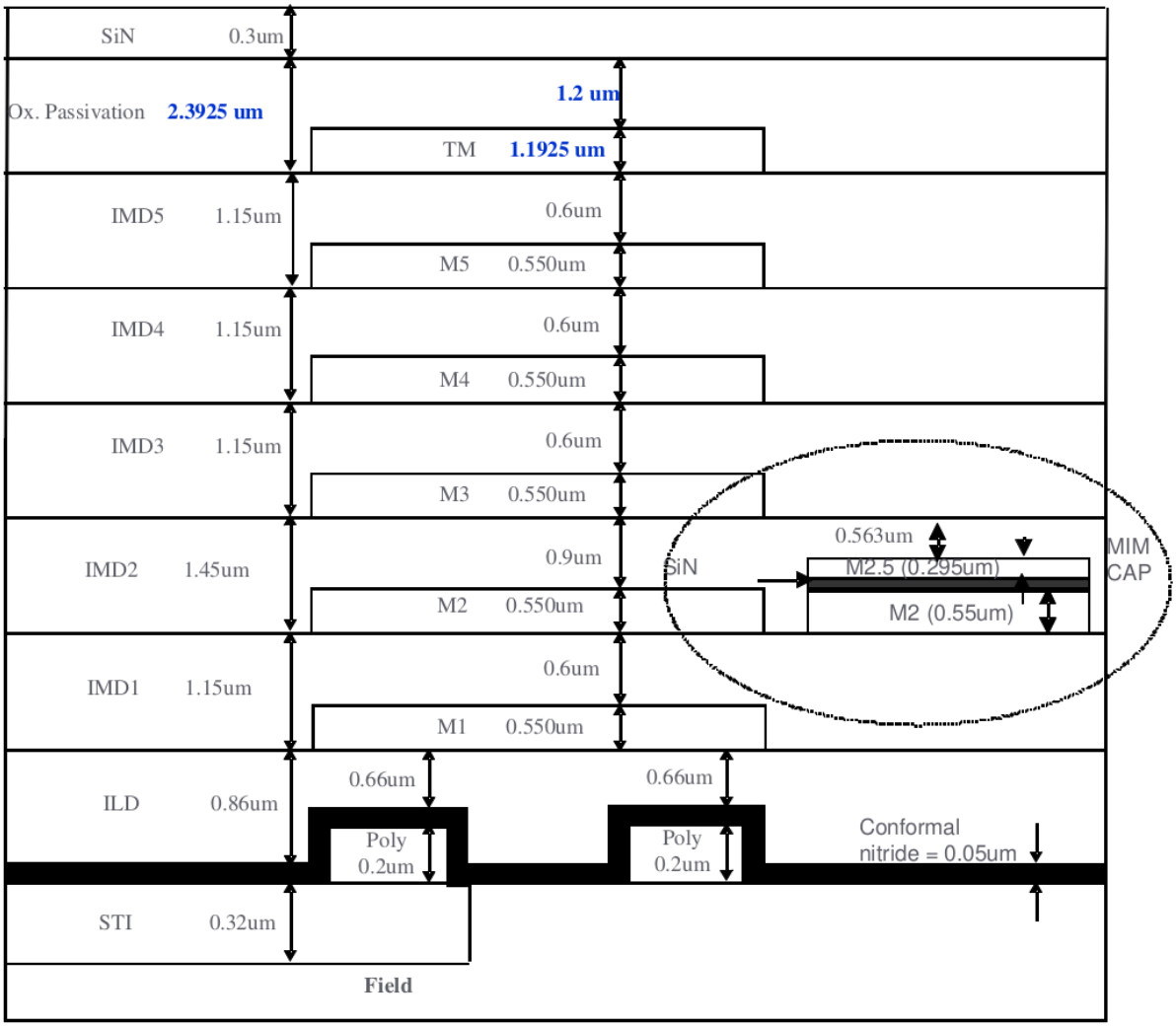

3.42 1P4M (TM 11KA with MIM Option B) Structure

MIM was placed in between Metal3 and Metal4 (TOP Metal); SIN=0.042um for 1.5fF, SIN=0.062um for 1.0fF

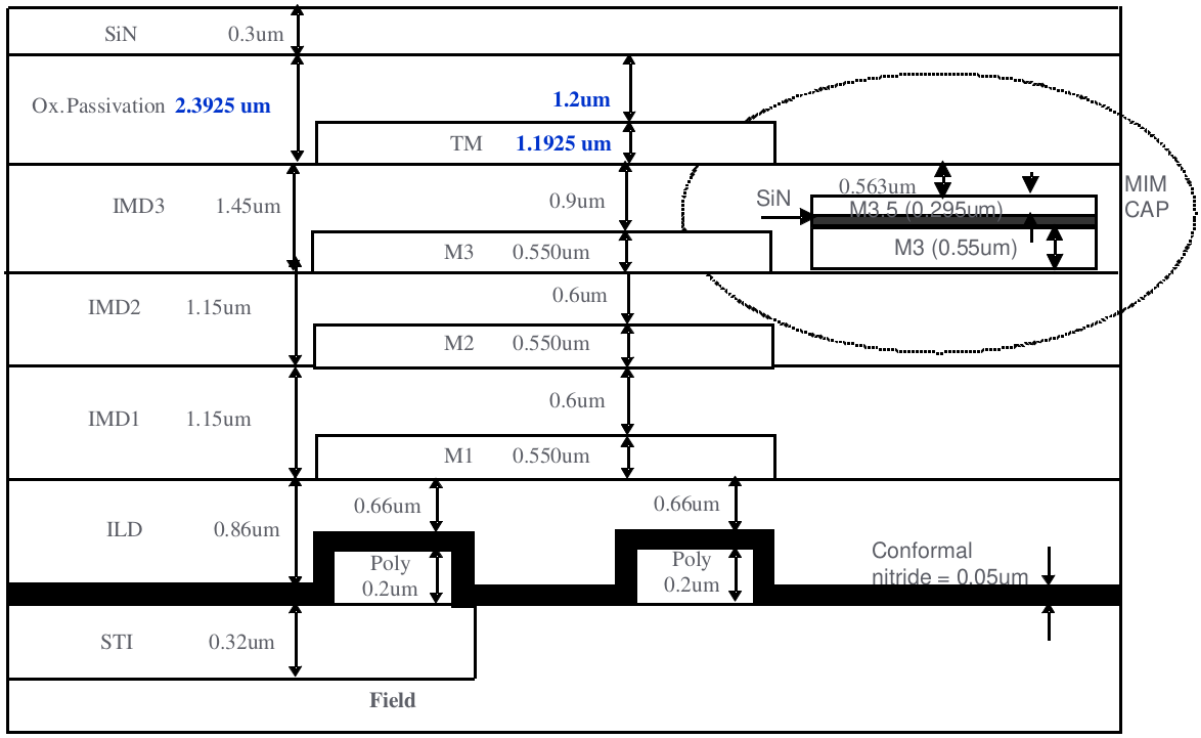

3.43 1P5M (TM 11KA with MIM Option B) Structure

MIM was placed in between Metal4 and Metal5 (TOP Metal); SIN=0.042um for 1.5fF, SIN=0.062um for 1.0fF

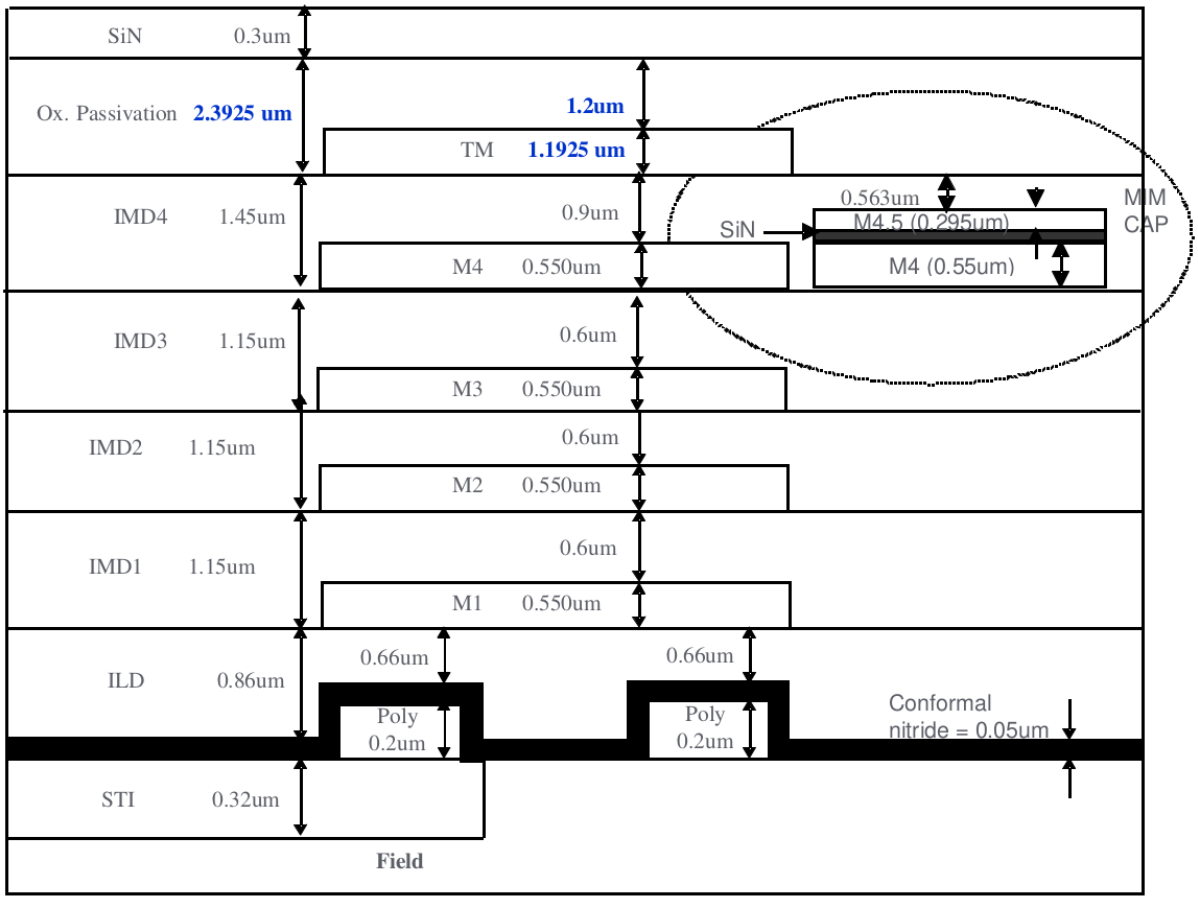

3.44 1P6M (TM 11KA with MIM Option B) Structure

MIM was placed in between Metal5 and Metal6 (TOP Metal); SIN=0.042um for 1.5fF, SIN=0.062um for 1.0fF

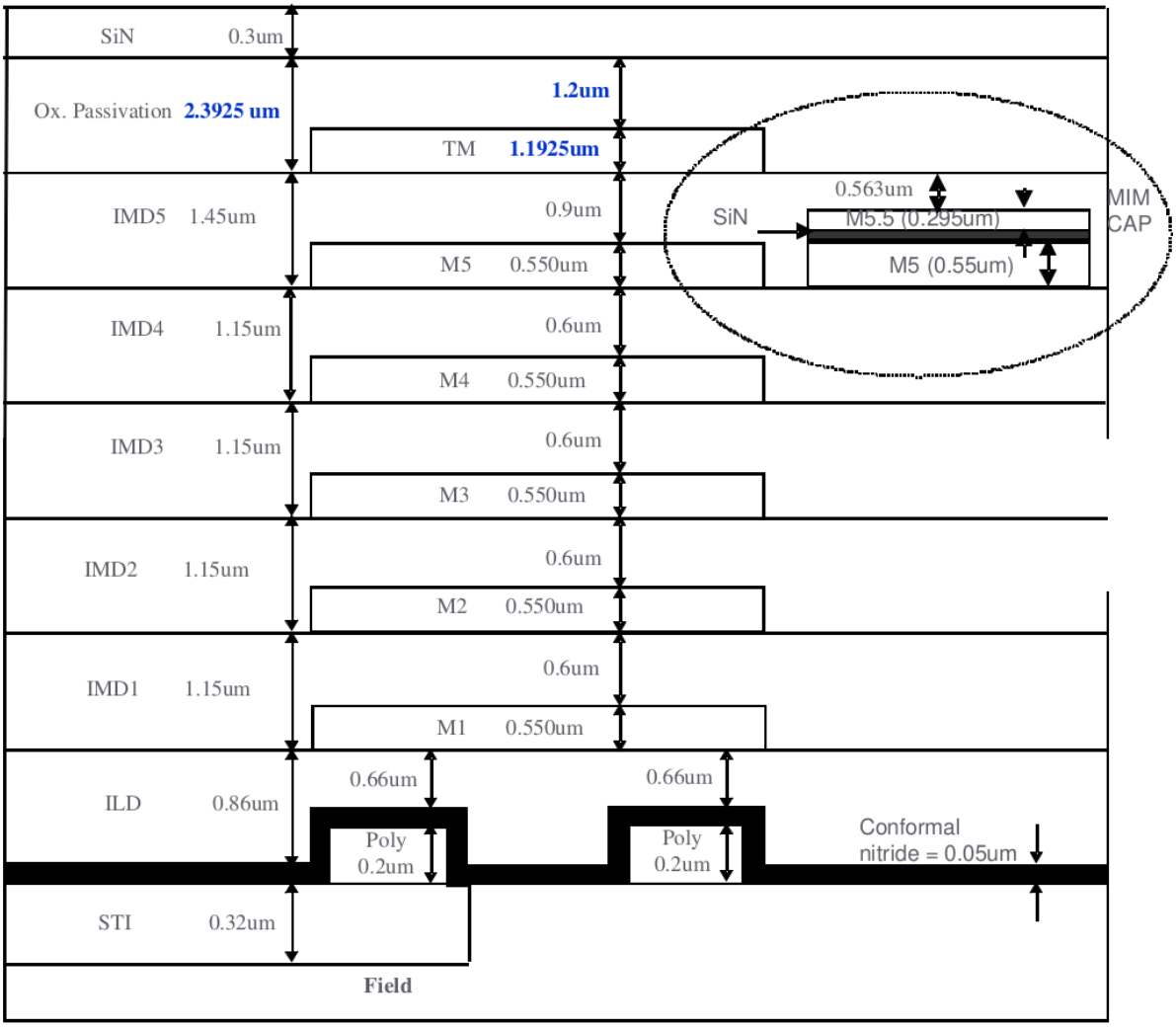
SiN 0.3um
Ox. Passivation 2.3925 um
1.2um
TM 1.1925um
IMD5 1.45um
0.9um
M5 0.550um
0.563um
SiN
M5.5 (0.295um)
M5 (0.55um)
MIM CAP
IMD4 1.15um
0.6um
M4 0.550um
IMD3 1.15um
0.6um
M3 0.550um
IMD2 1.15um
0.6um
M2 0.550um
IMD1 1.15um
0.6um
M1 0.550um
ILD 0.86um
0.66um
Poly 0.2um
0.66um
Poly 0.2um
Conformal nitride = 0.05um
STI 0.32um
Field

3.45 1P2M (without MIM, 30KA TM)

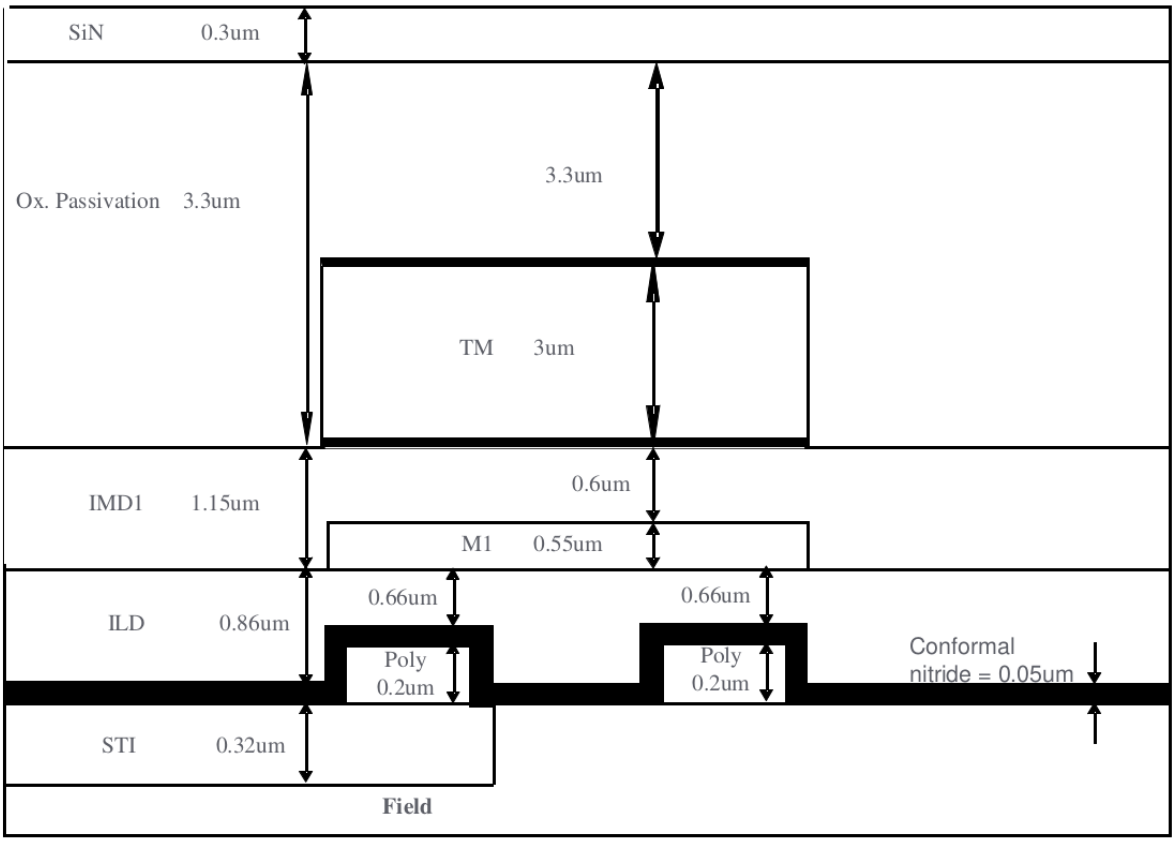

4.0 Sheet Rho table

Layer	Stack	Rs(ohm/Squre)
M1	375IMPTi/300A 101TiN/4.5KAL 10.6KW/100F_Ti/500TiN	0.090+/-0.014
M2	375IMPTi/300A 101TiN/4.5KAL 10.6KW/100F_Ti/500TiN	0.090+/-0.014
M3	375IMPTi/300A 101TiN/4.5KAL 10.6KW/100F_Ti/500TiN	0.090+/-0.014
M4	375IMPTi/300A 101TiN/4.5KAL 10.6KW/100F_Ti/500TiN	0.090+/-0.014
M5	375IMPTi/300A 101TiN/4.5KAL 10.6KW/100F_Ti/500TiN	0.090+/-0.014
MIM Top Plate	TiN600AMIMAL2000ATiN350A	0.18+/-0.027
TM(6KA)	375IMPTi/300A101TiN/6KAL 10.6KW/50FTI250TIN	0.060+/-0.012
TM(9KA)	375IMPTi/300A101TiN/9KAL 10.6KW/50FTI250TIN	0.04+/-0.009
TM(11KA)	375IMPTi/300A101TiN/11KAL/250TIN	0.04+/-0.009
TM(30KA)	375IMPTi/300A101TiN/30KAL /250TIN	0.0083+/-0.004

2.3 Model Parameters

2.3.1 FAB3E Spice Model For 0.18um 3.3v/6v High Voltage MCU Process

FAB3E Spice Models For 0.18um

3.3V/6V High Voltage MCU Process

Model Reference Guide

1.0 Introduction

This application note is intended as a user guide for GlobalFoundries's 0.18um 3.3V/6V high voltage MCU process.

1.1 Scope

This documentation contains the following types of information:

- GlobalFoundries CMOS modeling methodology overview
- Model features, limitations and/or restrictions
- Conditions used for device characterization or model extraction
- Model-to-Hardware correlation plots

1.2 Reference Document

Other modeling information shall be found in the following sources:

Electrical Specifications

Design Manual

1.3 Model Overview

GlobalFoundries's models are physics-based, scalable compact models, in contrast to models based on fitting a discrete device. This allows the greatest amount of flexibility for designers and provides good model accuracy over a broad range of applications.

1.4 Device List

1.4.1 MOSFETs

Model Name	Description	Scal-able	Corner Model	Global Statistical	Local Statistical
nfet_03v3	BSIM4 model for 0.18um 3.3V NMOS	Y	Y	Y	Y
pfet_03v3	BSIM4 model for 0.18um 3.3V PMOS	Y	Y	Y	Y
nfet_06v0	BSIM4 model for 0.18um 6V NMOS	Y	Y	Y	Y
pfet_06v0	BSIM4 model for 0.18um 6V PMOS	Y	Y	Y	Y
nfet_03v3_dss	Subcircuit model for 3.3V NMOS with SAB	Y	Y	Y	Y
pfet_03v3_dss	Subcircuit model for 3.3V PMOS with SAB	Y	Y	Y	Y
nfet_06v0_dss	Subcircuit model for 6.0V NMOS with SAB	Y	Y	Y	Y
pfet_06v0_dss	Subcircuit model for 6.0V PMOS with SAB	Y	Y	Y	Y
nfet_06v0_nvt	BSIM4 model for 0.18um 6V native NMOS	Y	Y	Y	N

1.4.2 Diodes

Model Name	Description	Scalable	Corner Model	Global Statistical
diode_nd2ps_03v3	Model for thin gate N+/Psub diode	Y	Y	N
diode_pd2nw_03v3	Model for thin gate P+/Nwell diode	Y	Y	N
diode_nd2ps_06v0	Model for thin gate N+/Psub diode	Y	Y	N
diode_pd2nw_06v0	Model for thin gate P+/Nwell diode	Y	Y	N
diode_nw2ps_03v3	Model for 3.3V Nwell/Psub diode	Y	Y	N
diode_nw2ps_06v0	Model for 6V Nwell/Psub diode	Y	Y	N
diode_pw2dw	Model for PWELL/DNWELL diode	Y	Y	N
diode_dw2ps	Model for DNWELL/Psub diode	Y	Y	N
sc_diode	Model for Schottky diode	Y	Y	N

1.4.3 BJTs

Model Name	Description	Scal-able	Corner Model	Global Statistical	Local Statistical
pnp_10p00x10	GP model for vertical PNP with emitter size of 10um x 10um	N	Y	Y	Y
pnp_05p00x05	GP model for vertical PNP with emitter size of 5um x 5um	N	Y	Y	Y
vpnp_0.42x10	GP model for vertical PNP with emitter size of 0.42um x 10um	N	Y	Y	Y
vpnp_0.42x5	GP model for vertical PNP with Emitter size of 0.42um x 5um	N	Y	Y	Y
npn_10p00x10	GP model for vertical NPN with emitter size of 10umx10um	N	Y	Y	N
npn_05p00x05	GP model for vertical NPN with emitter size of 5umx5um	N	Y	Y	N
npn_00p54x16	GP model for VNPN with emitter size of 0.54umx16um	N	Y	Y	N
npn_00p54x08	GP model for VNPN with emitter size of 0.54umx8um	N	Y	Y	N
npn_00p54x04	GP model for VNPN with emitter size of 0.54umx4um	N	Y	Y	N
npn_00p54x02	GP model for VNPN with emitter size of 0.54umx2um	N	Y	Y	N

1.4.4 Resistors

Model Name	Description	Scal-able	Corner Model	Global Statistical	Local Statistical
npolyf_u	3-T Model for unsalicided N+ poly resistor	Y	Y	Y	Y
ppolyf_u	3-T Model for unsalicided P+ poly resistor	Y	Y	Y	Y
ppolyf_u_1k	3-T Model for 1k ohm hi sheet rho P poly resistor (3.3V)	Y	Y	Y	N
ppolyf_u_2k	3-T Model for 2k ohm hi sheet rho P poly resistor (3.3V)	Y	Y	Y	N
ppolyf_u_1k_6	3-T Model for 1k ohm hi Sheet rho P poly resistor (6.0V)	Y	Y	Y	N
ppolyf_u_2k_6	3-T Model for 2k ohm hi sheet rho P poly resistor (6.0V)	Y	Y	Y	N
ppolyf_u_3k	3-T Model for 3k ohm hi sheet rho P poly resistor (3.3V)	Y	Y	Y	N
nplus_u	3-T Model for unsalicided N+ diffusion resistor	Y	Y	Y	Y
pplus_u	3-T Model for unsalicided P+ diffusion resistor	Y	Y	Y	Y
npolyf_s	3-T Model for salicided N+ poly resistor	Y	Y	Y	N
ppolyf_s	3-T Model for salicided P+ poly resistor	Y	Y	Y	N
nplus_s	3-T Model for salicided N+ diffusion resistor	Y	Y	Y	N
pplus_s	3-T Model for salicided P+ diffusion resistor	Y	Y	Y	N
nwell	3-T Model for Nwell resistor	Y	Y	N	N
rm1	2-T Model for metal 1 resistor	Y	Y	N	N
rm2	2-T Model for metal 2 resistor	Y	Y	N	N
rm3	2-T Model for metal 3 resistor	Y	Y	N	N
tm6k	2-T Model for top metal 6k resistor	Y	Y	N	N
tm9k	2-T Model for top metal 9k resistor	Y	Y	N	N
tm11k	2-T Model for top metal 11k resistor	Y	Y	N	N
tm30k	2-T Model for top metal 30k resistor	Y	Y	N	N
efuse	model for 6V(5V) efuse	N	N	N	N

1.4.5 MOSCAP

Model Name	Description	Scal-able	Corner Model	Statistical Model
cap_nmos_03v3	Model for nominal IO 3.3V inversion-mode NMOS capacitor	Y	Y	N
cap_pmos_03v3	Model for nominal IO 3.3V inversion-mode PMOS capacitor	Y	Y	N
cap_nmos_06v0	Model for nominal IO 6V inversion -mode NMOS capacitor	Y	Y	N
cap_pmos_06v0	Model for nominal IO 6V inversion -mode PMOS capacitor	Y	Y	N
cap_nmos_03v3_	Model for nominal IO 3.3V NMOS in Nwell capacitor	Y	Y	N
cap_pmos_03v3_	Model for nominal IO 3.3V PMOS in Pwell capacitor	Y	Y	N
cap_nmos_06v0_	Model for nominal IO 6V NMOS in Nwell capacitor	Y	Y	N
cap_pmos_06v0_	Model for nominal IO 6V PMOS in Pwell capacitor	Y	Y	N

1.4.6 MIM

Model Name	Description	Scal-able	Corner Model	Global Statistical	Local Statistical
cap_nmos_0	Model for 1.5fF/um2 MIM (*)-usable for Volt <=6V across capacitor	Y	Y	Y	N
cap_pmos_0	Model for 1.0fF/um2 MIM (*)-usable for Volt <=6V across capacitor	Y	Y	Y	N
cap_nmos_0	Model for 2.0fF/um2 MIM (*)-usable for Volt <=6V across capacitor	Y	Y	Y	N

1.5 Instance Parameters List

This section describes the instance parameters to be used in the net list for all the devices

1.5.1 MOSFET Instance parameters

The MOSFET instance parameters shall be used in the netlist are described below with their default values: -

Parameter	Description
w	Device width in meter
l	Device length in meter
nf	Number of PC (gate) fingers
as	Source diffusion area in meter^2
ad	Drain diffusion area in meter^2
ps	Source diffusion perimeter in meter
pd	Drain diffusion perimeter in meter
nrs	Number of squares in source
nrd	Number of squares in drain

1.5.1.1 LV NMOS (3.3V) and LV PMOS (3.3V) & NMOS SAB (3.3V) and PMOS SAB (3.3V)

Model Name & (BSIM Version)	Parameter Value	W	L	nf	as	ad	ps	pd	nrs	nrd	dtemp
nfet_03v (BSIM 4.5)	Min	0.22	0.28	1	•	•	•	•	•	•	•
	Max	100	50	•	•	•	•	•	•	•	•
	Default	0	0	1	0	0	0	0	0	0	0
pfet_03v (BSIM 4.5)	Min	0.22	0.28	1	•	•	•	•	•	•	•
	Max	50	100	•	•	•	•	•	•	•	•
	Default	0	0	1	0	0	0	0	0	0	0

1.5.1.2 MV NMOS (5V/6V), MV PMOS (5V/6V), NMOS SAB (5V/6V), PMOS SAB (5V/6V) and native NMOS (6V)

Model Name & (BSIM Version)	Parameter Value	W	L	nf	as	ad	ps	pd	nrs	nrd	dtemp
nfet_06v (BSIM 4.5)	Min	0.3	0.6	1	•	•	•	•	•	•	•
	Max	100	50	•	•	•	•	•	•	•	•
	Default	0	0	1	0	0	0	0	0	0	0
pfet_06v (BSIM 4.5)	Min	0.3	0.5	1	•	•	•	•	•	•	•
	Max	100	50	•	•	•	•	•	•	•	•
	Default	0	0	1	0	0	0	0	0	0	0
nfet_06v (BSIM 4.6)	Min	0.8	1.8	1	•	•	•	•	•	•	•
	Max	100	50	•	•	•	•	•	•	•	•
	Default	0	0	1	0	0	0	0	0	0	0

1.5.2 Diode Instance parameters

The Diode instance parameters shall be used in the netlist are described below with their default values: -

- area : Junction area of diode
- pj : Junction perimeter of diode
- w : Width of diode (meter)
- l: Length of diode (meter)

User may use either area & pj or w&l to define diode junction geometries.

Model Name	Instance Parameters	
	Parameter	Default
	area	1
	pj	0
All diode Models	w	0
	l	0
	m	1

1.5.3 Resistor Instance parameters

The resistor instance parameters shall be used in the netlist are described below with their default values: -

- w : Width of resistor (meter)
- l : Length of resistor (meter)
- m : Device multiplicity factor

Model Name	Instance Parameters	
	Parameter	Default
	w	0
All Resistor Models	l	0
	m	1

1.5.4 MOSCAP Instance parameters

The resistor instance parameters shall be used in the netlist are described below with their default values: -

- w : Width of MOS Capacitor (meter)
- l : Length of MOS Capacitor (meter)
- m : Device multiplicity factor

Model Name	Instance Parameters	
	Parameter	Default
	w	0
All MOSCAP Models	l	0
	m	1

1.5.5 MIM Capacitor Instance parameters

The resistor instance parameters shall be used in the netlist are described below with their default values: -

- w : Width of MIM Capacitor (meter)
- l : Length of MIM Capacitor (meter)
- m : Device multiplicity factor

Model Name	Instance Parameters	
	Parameter	Default
	w	0
All MOSCAP Models	l	0
	m	1

2.0 MOSFET Models

2.1 MOSFET Model Extraction

The models were extracted based on DC I-V data taken from a matrix of width and length devices at three temperatures, -40C, 25C, and 125C, under zero and different biases for body, gate and drain.

The models were fitted to the hardware first, and then re-centered to match the EP specification nominal target. During the model build, the device I-V characteristics were measured on both the isolated and the nested devices. Careful calibration of gate length was required to ensure correct relationship of device parameters (current, vt, dibl, gds, etc) to gate capacitance.

The process tolerance, such as tox, delta L and delta W etc, based on the EP specs were added to the models for process skew simulation.

2.2 Model Features and Limitations

Device width and length in a FET call

During a FET netlist call, users should use design dimension for W and L, not effective width and length. In this release, the BSIM model parameter Lmin is set to the nominal drawn gate length. This may cause warnings to be generated during corner simulations when the biased gate length becomes less than Lmin. This warning has no effect on the simulation results.

2.2.1 LV NMOS and LV PMOS (3.3V)

Device size (unit - um)

W X L	100	10	1	0.5	0.28
50	+	+	+	+	+
10	+	x	x	x	x
1.2	+	x	x	x	x
0.5	+	x	x	x	x
0.22	+	x	x	x	x

Note:

- x - device with measured data and used for binned model extraction
- – ∗ Pseudo device

2.3 1/f Noise Measurement conditions

Flicker noise model in this release uses the unified flicker noise model provided in BSIM model. The 1/f noise measurement was taken from the typical DC chip by using Noise Analyzer with a frequency sweep of 10Hz to 100 KHz. Measurement was taken from several dies and the median noise data is used for model fitting. The BSIM flicker noise parameters are then extracted for linear-to-saturation and weak-to-strong inversion regions. The DC model parameters, which are used in noise model extraction, are the as-fit parameters tuned for the chip in order to reduce error in DC characteristics, drain current as well as transconductance.

The bias conditions and the devices used for measuring 1/f noise are summarized in the following table.

Device	Vds (V)	Vgs (V)	W x L (um x um)
nfet_03v3	0.1, 1.8, 3.3	0.8, 1.8, 3.3	10x0.28
pfet_03v3	-0.1, -1.8, -3.3	-0.8, -1.8, -3.3	10x0.28
nfet_06v0	0.1, 3, 6	1, 3, 6	10x0.7
pfet_06v0	-0.1, -3, -6	-1, -3, -6	10x0.55
nfet_06v0_nvt	0.1, 3, 6	0.3, 3, 6	10x1.8

2.4 MOSFET Fixed Corner Models

2.4.1 Fixed Corner Methodology

This section discusses the definition of the fixed corners supplied with GlobalFoundries MOSFET models. There are many ways to define the process skew corners. Process corners of a circuit are related to the circuit design sensitivities to the process parameters, particularly in analog circuits. We are in no position to cover all the possible corners. The provided corner models are primarily for predicting static logic delay.

Corner models for these devices are based entirely on line data and EP specifications of the devices.

A fixed corner model is selected by including the appropriate corner library models as described in the below table. Each corner model has some parameters set to appropriate defined values for each corner. Currently ability to customize corner models by over-riding the defined values is not supported in this release.

2.4.2 Corner Model Definitions

Corner/Library Name	Definition Purpose
typical	Nominal process/Estimate typical performance
ff	Bound EP specifications extreme Idsat and Vt for wide and narrow short channel FETs. Verify circuit robustness under extreme process condition with fast NFET and fast PFET
ss	Bound EP specifications extreme Idsat and Vt for wide and narrow short channel FETs. Verify circuit robustness under extreme process condition with slow NFET and slow PFET
fs	Match Idsat and Vt skew between NFETs and PFETs based on line data and EP specifications. Circuit operation under N to P mismatch, for fast NFET and slow PFET
sf	Match Idsat and Vt skew between NFETs and PFETs based on line data and EP specifications. Circuit operation under N to P mismatch, for slow NFET and fast PFET

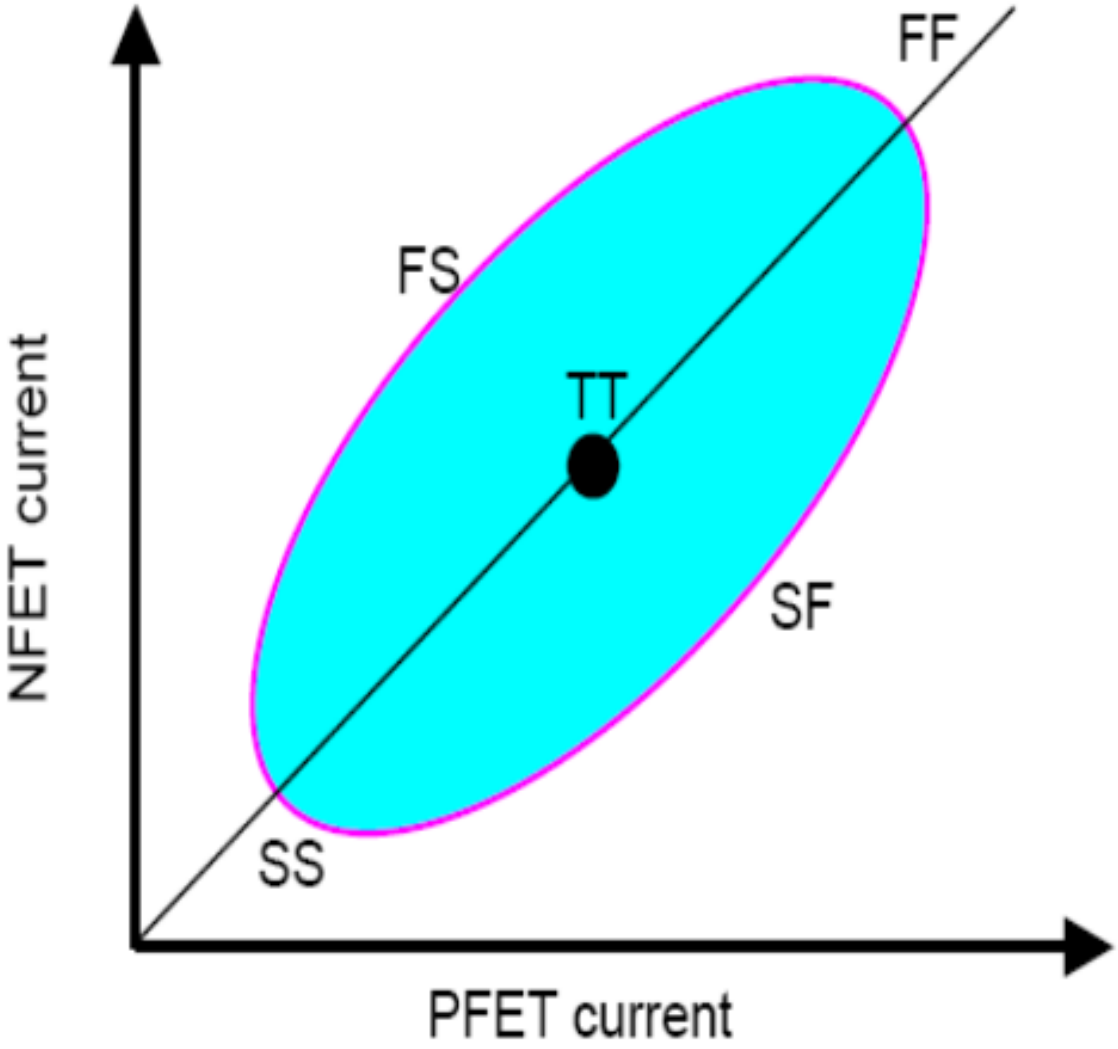

2.5 Model vs. EP Nominal Target

In the following sections, the comparison of the key device parameters between the models and EP targets (YI-141-EP059) are listed for each device. The values are for 25C unless specified otherwise.

The measured and simulated results are obtained using the following bias conditions: Idsat @ Vbs = 0 and Vds = Vgs = Vdd (NMOS) / -Vdd (PMOS)

where

- Vdd = 3.3V for nfet_03v3
- Vdd =-3.3V for pfet_03v3
- Vdd = 6V for nfet_06v0
- Vdd =-6V for pfet_06v0
- Vdd = 6V for nfet_06v0_nvt

Note: Vth0 is the measured or simulated threshold voltage obtained using the max Gm method at Vd = 0.05V. For 6.0V native NMOS, Vth0 is measured and simulated at Vd=0.1V. Vth1 is the simulated threshold voltage obtained using the BSIM equation. These two values may have a difference.

2.5.1 nfet_03v3 and pfet_03v3 (3.3V)

EP Specification				Measurement	
Device (W/L)	Model	Idsat (uA/um)	Vth0 (V)	Idsat (uA/um)	Vth0 (V)
nfet_03v3 (10/0.28)	slow	430	0.73	-	-
	typical	510	0.63	508	0.644
	fast	590	0.53	-	-
pfet_03v3 (10/0.28)	slow	-210	-0.85	-	-
	typical	-250	-0.73	-254.1	-0.733
	fast	-290	-0.61	-	-

2.5.2 NMOS 3p3 SAB PMOS 3p3 SAB

EP Specification				
Device (W/L)	Model	Idsat (uA/um)	Vth0 (V)	Idlin (uA/um)
nfet_03v3_dss * (10/0.28)	slow	426	0.73	52
	typical	505	0.63	57
	fast	586	0.53	63
pfet_03v3_dss (10/0.28)	slow	-206	-0.84	-18
	typical	-245	-0.72	-20
	fast	-286	-0.6	-23

Note:

- nfet_03v3_dss SAB Length on Drain side SAB DOP: 1.78um , Source Side SAB SOP: 0.48um
- pfet_03v3_dss SAB Length on Drain side SAB DOP: 1.78um, Source Side SAB SOP: 0.48um

2.5.3 nfet_06v0 and pfet_06v0 (6V)

EP Specification				Measurement	
Device (W/L)	Model	Idsat (uA/um)	Vth0 (V)	Idsat (uA/um)	Vth0 (V)
nfet_06v0 (10/0.7)	slow	480	0.85	-	-
	typical	570	0.73	579.6	0.738
	fast	660	0.61	-	-
nfet_06v0_nvt (10/1.8)	slow	430	0.08	-	-
	typical	535	-0.12	543	-0.12
	fast	640	-0.32	-	-
pfet_06v0 (10/0.55)	slow	-240	-0.98	-	-
	typical	-290	-0.85	-297.4	-0.849
	fast	-340	-0.72	-	-

Note:

- nfet_06v0_dss Length of SAB on Drain side : 3.78um, Length of SAB on Source side: 0.28um
- pfet_06v0_dss Length of SAB on Drain side : 2.78um, Length of SAB on Source side: 0.28um

2.5.4 nfet_06v0 and pfet_06v0 (5V)

EP Specification				Measurement	
Device (W/L)	Model	Idsat (uA/um)	Vth0 (V)	Idsat (uA/um)	Vth0 (V)
nfet_06v0 (10/0.6)	slow	400	0.82	-	-
	typical	500	0.7		
	fast	600	0.58	-	-
pfet_06v0 (10/0.5)	slow	-200	-0.96	-	-
	typical	-240	-0.83		
	fast	-280	-0.7	-	-

EP Specification				
Device (W/L)	Model	Idsat (uA/um)	Vth0 (V)	Idlin (uA/um)
nfet_06v0_dss (10/0.6)	Slow	398	0.84	39
	typical	498	0.72	46
	fast	598	0.58	53
pfet_06v0_dss (10/0.5)	slow	-187	-0.97	-12
	typical	-233	-0.84	-14
	fast	-280	-0.71	-17

2.6 How to Use the Models

2.6.1 For NGSPICE Users

To be added

2.6.2 For XYCE Users

To be added

3.0 Diode Models

3.1 Model description and limitation

Temperature characteristics are measured form -40 to 125 C for IV and CV it is taken @ 25C and 125C.The diodes are modeled with Level 3 diode model. The forward bias behavior and the reverse breakdown behavior are modeled for different temperatures.

Schottky Diode Breakdown Temperature dependence is not modelled.

Diode	CV Measurement		IV Measurement	
	Area(um^2)	Perimeter(um)	Area(um^2)	Perimeter(um)
3.3V N+/Psub Area diode	80000	1140	1600	160
3.3V N+/Psub Peri diode	50000	25400	1600	3280
3.3V P+/Nwell Area diode	80000	1140	1600	160
3.3V P+/Nwell Peri diode	50000	25400	1600	3280
6V N+/Psub Area diode	80000	1140	1600	160
6V N+/Psub Peri diode	50000	25400	1600	3280
6V P+/Nwell Area diode	80000	1140	1600	160
6V P+/Nwell Peri diode	50000	25400	1600	3280
Pwell/Dnwell Area diode	10000	400	100	40
Pwell/Dnwell Peri diode	1750	5070	2000	2080
Dnwell/Psub Area diode	10000	400	100	40
Dnwell/Psub Peri diode	4250	5170	5000	2200
Schottky Diode/ Area diode	Wf/L=0.62u/20u Nf=4		Wf/L=0.62u/20u Nf=4	

3.2 Model vs EP Nominal Target

EP Specification						Measurement		
Device (W/L/m)	Model	BV (V)	I_leak (nA/um^2)	Von (V)	BV	I_leak (nA/um^2)	(V)	Von (V)
sc_diode (W/L/m) =(0.62u/20u/4)	Min	-10	-	0.22	-	-		-
	Typ	-17	35	0.32	-17.6	31		0.32
	Max	-	200	0.42	-	-		-

Bias Conditions:

- Von: @Forward current=1uA/um^2
- Reverse Breakdown: @Reverse current =10uA/um^2
- Reverse Leakage current: @Reverse voltage=6.6V

3.3 How to Use the Models

3.3.1 For NGSPICE Users

To be added

3.3.2 For XYCE Users

To be added

4.0 Resistor Models

Resistor Model	Description
npolyf_u	3-T Model for unsalicided N+ poly resistor
ppolyf_u	3-T Model for unsalicided P+ poly resistor
ppolyf_u_1k	3-T Model for 1k ohm hi sheet rho P poly resistor (3.3V)
ppolyf_u_2k	3-T Model for 2k ohm hi sheet rho P poly resistor (3.3V)
ppolyf_u_1k_6p0	3-T Model for 1k ohm hi sheet rho P poly resistor (6.0V)
ppolyf_u_2k_6p0	3-T Model for 2k ohm hi sheet rho P poly resistor (6.0V)
ppolyf_u_3k	3-T Model for 3k ohm hi sheet rho P poly resistor (3.3V & 6V)
nplus_u	3-T Model for unsalicided N+ diffusion resistor
pplus_u	3-T Model for unsalicided P+ diffusion resistor
npolyf_s	3-T Model for salicided N+ poly resistor
ppolyf_s	3-T Model for salicided P+ poly resistor
nplus_s	3-T Model for salicided N+ diffusion resistor
pplus_s	3-T Model for salicided P+ diffusion resistor
nwell	3-T Model for Nwell resistor
rm1	2-T Model for metal 1 resistor
rm2	2-T Model for metal 2 resistor
rm3	2-T Model for metal 3 resistor
tm6k	2-T Model for top metal 6k resistor
tm9k	2-T Model for top metal 9k resistor
tm30k	2-T Model for top metal 30k resistor
efuse	Model for 5V(6V) efuse

4.1 Model Features

The NGSPICE and XYCE resistor models include:

- Multiple lumped element R-C sub-circuit.
- Separate body and end resistance temperature coefficients.
- Parasitic capacitance between the resistor and substrate is accounted for.
- Device temperature difference with respect to circuit temperature (dtemp).
- Resistors connected in series cannot represented using instance parameter "s"

4.2 Model Limitations and Restrictions

Known limitations of the NGSPICE and XYCE resistor models:

To be added

4.3 Model Syntax for Resistors

Input Parameters:

- w: resistor design width (m)
- l: resistor design length (m)
- s: Number of resistors in series

General Syntax:

Xxx IN OUT SUB resistor_model_name w= l= s=

Examples:

XR1 1 2 3 nwell w=10um l=10um s=2

4.4 How to Use the Models

4.4.1 For NGSPICE Users

To be added

4.4.2 For XYCE Users

To be added

5.0 BJT Models

BJT Model parameters are extracted for the following devices at temperatures (-40, 25 and 125)

- Vertical PNP with emitter size = 10um x 10um
- Vertical PNP with emitter size = 5um x 5um
- Vertical PNP with emitter size = 0.42um x 10um
- Vertical PNP with emitter size = 0.42um x 5um
- Vertical NPN with emitter size = 10um x 10um
- Vertical NPN with emitter size = 5um x 5um
- Vertical NPN with emitter size = 0.54um x 16um
- Vertical NPN with emitter size = 0.54um x 8um
- Vertical NPN with emitter size = 0.54um x 4um
- Vertical NPN with emitter size = 0.54um x 2um

5.1 Model Limitations and Restrictions

Known limitations of the NGSPICE and XYCE vertical BJT models:

To be added

5.2 How to use the Models

5.2.1 For NGSPICE Users

To be added

5.2.2 For XYCE Users

To be added

6.0 MOSCAP Capacitor Models

6.1 Model Limitations and Restrictions

To be added

6.2 Model Syntax For MOS Capacitor

Input Parameters:

- w: Top plate(poly) design width [m].
- l: Top plate(poly) design length [m].

General Syntax:

Xxx node_1 node_2 moscap_model_name w = l=

Examples:

Xc1 1 2 cap_nmos_03v3 w=50u l=50u

6.2 How to use the Models

6.2.1 For NGSPICE Users

To be added

6.2.2 For XYCE Users

To be added

7.0 MIM Capacitor Models

7.1 Model Limitations and Restrictions

To be added

7.2 Model Syntax For MIM Capacitor

Input Parameters:

- w: Top plate design width [m].
- l: Top plate design length [m].

General Syntax:

Xxx node_1 node_2 mimcap_model_name w = l=

Examples:

Xc1 1 2 mimcap_1p0fF w=50u l=50u

7.2 How to use the Models

7.2.1 For NGSPICE Users

To be added

7.2.2 For XYCE Users

To be added

8.0 Model to Hardware Correlation

8.1 MOSFETs

8.1.1 nfet_03v3 (3.3V)

8.1.1.1 CV - Characteristics

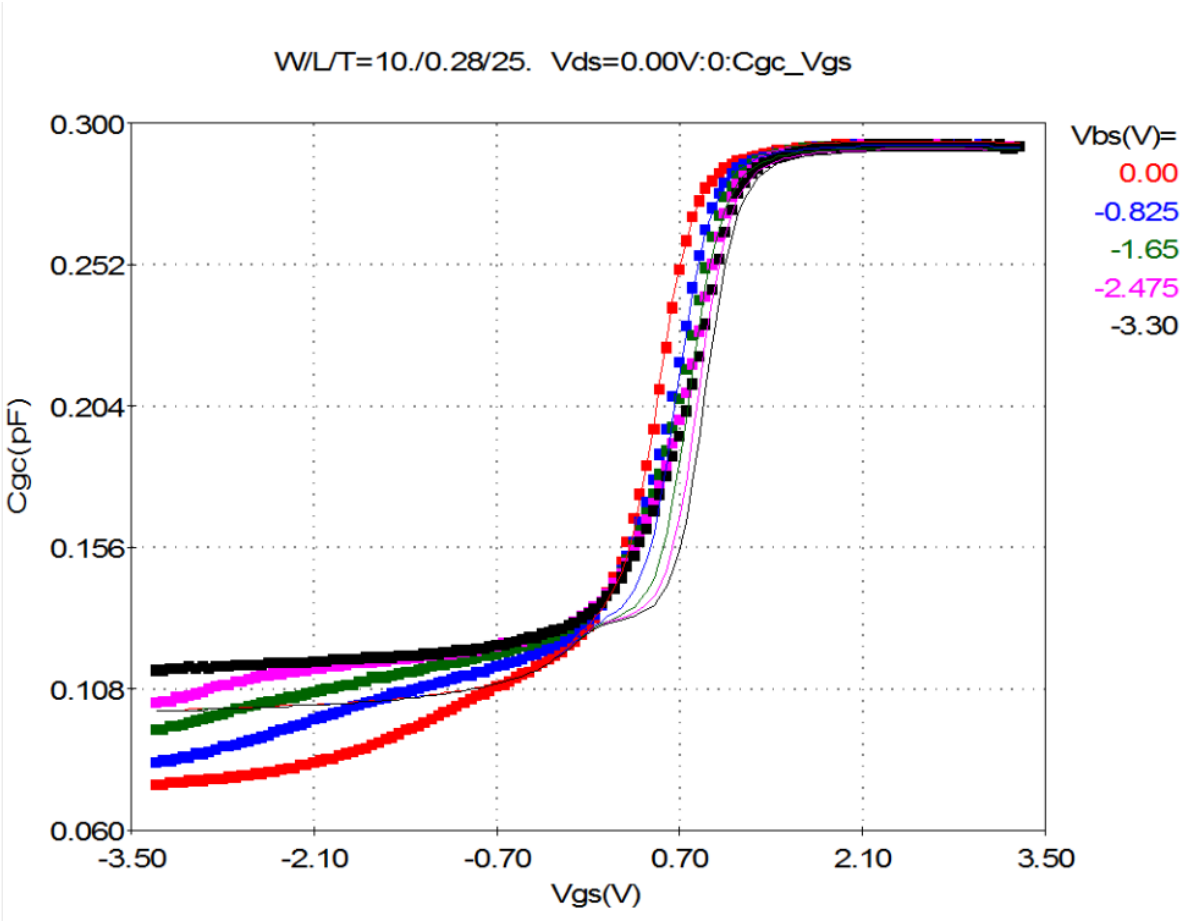

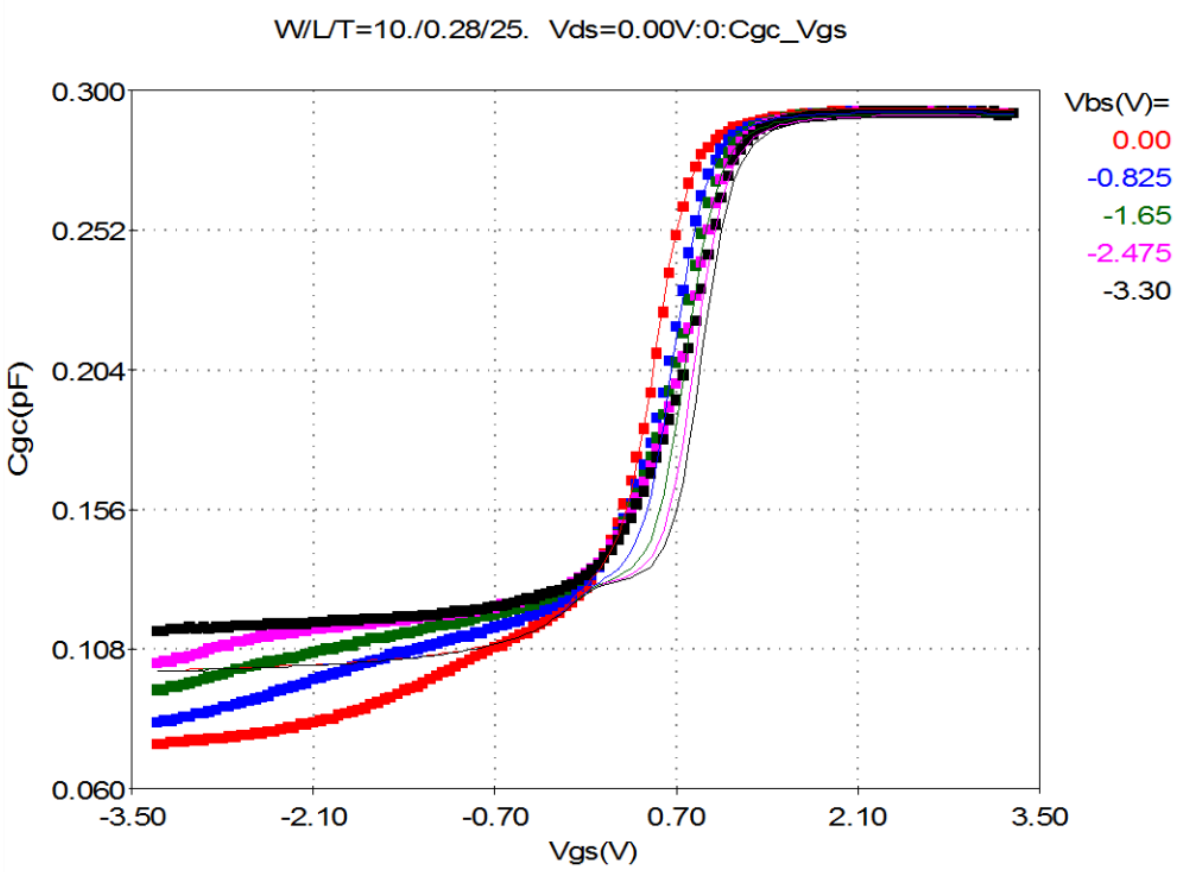
W/L/T=10./0.28/25. Vds=0.00V:0:Cgc_Vgs
Cgc(pF)
0.300
0.252
0.204
0.156
0.108
0.060
-3.50
-2.10
-0.70
0.70
2.10
3.50
Vgs(V)
Vbs(V)=
0.00
-0.825
-1.65
-2.475
-3.30

8.1.1.2 IV - Characteristics

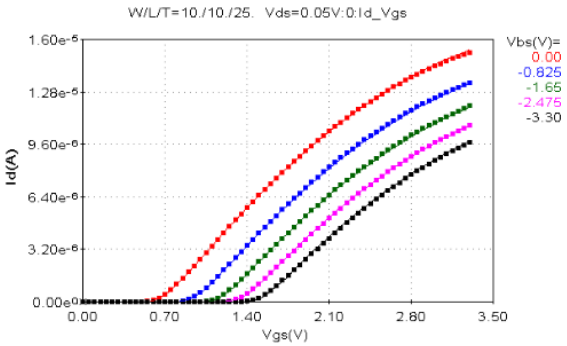

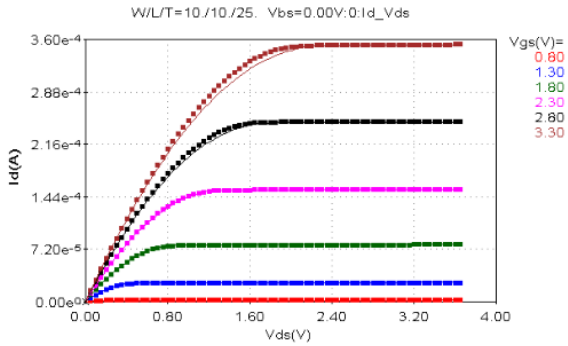

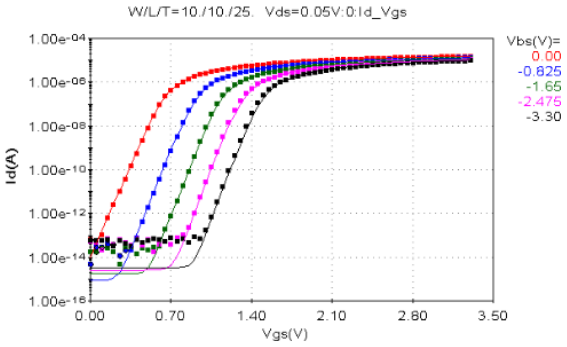

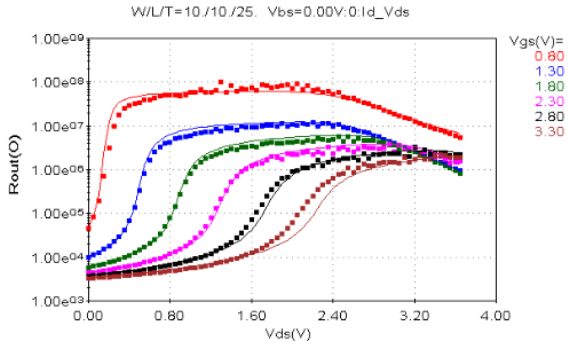

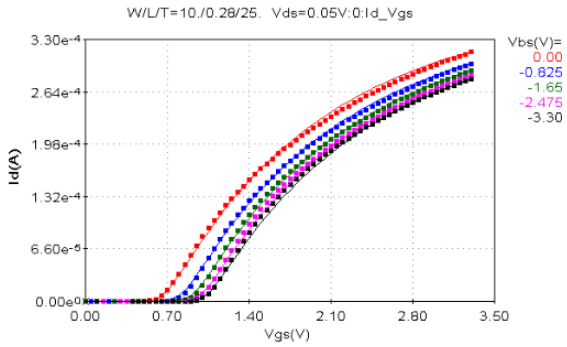

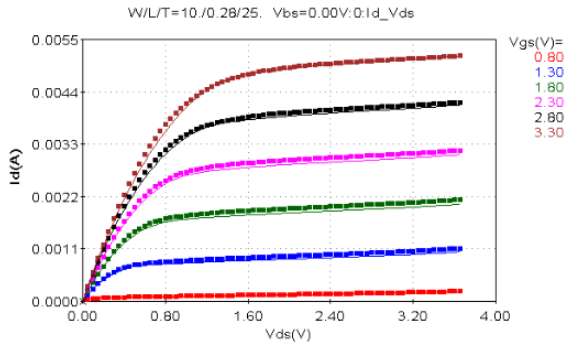

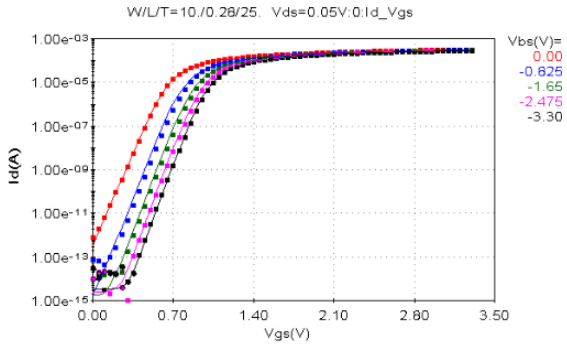

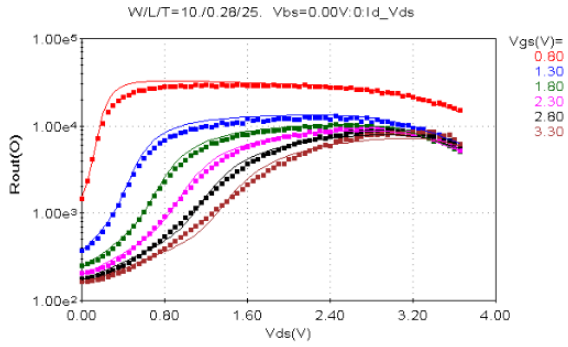

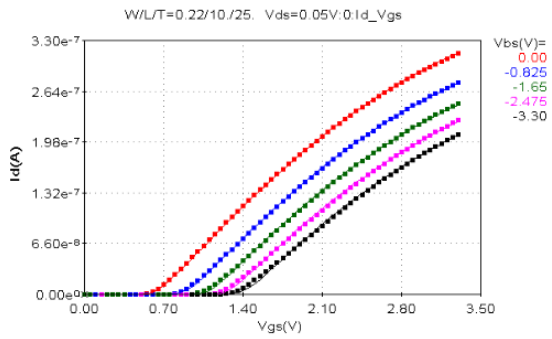
W/L/T=0.22/10./25. Vds=0.05V:0:Id_Vgs
Id(A)
Vgs(V)
Vbs(V)=
0.00
-0.825
-1.65
-2.475
-3.30

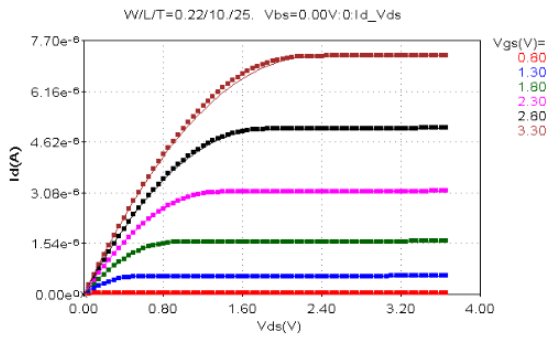
W/L/T=0.22/10./25. Vbs=0.00V:0:Id_Vds
Id(A)
Vds(V)
Vgs(V)=
0.80
1.30
1.80
2.30
2.80
3.30

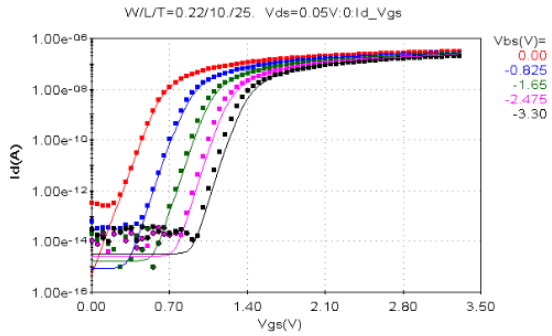
W/L/T=0.22/10./25. Vds=0.05V:0:Id_Vgs
Id(A)
Vgs(V)
Vbs(V)=
0.00
-0.825
-1.65
-2.475
-3.30

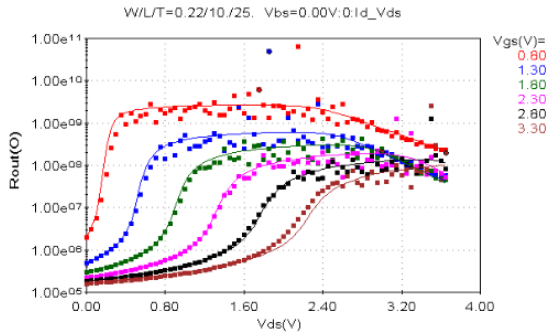
W/L/T=0.22/10./25. Vbs=0.00V:0:Id_Vds
Rout(O)
Vds(V)
Vgs(V)=
0.80
1.30
1.80
2.30
2.80
3.30

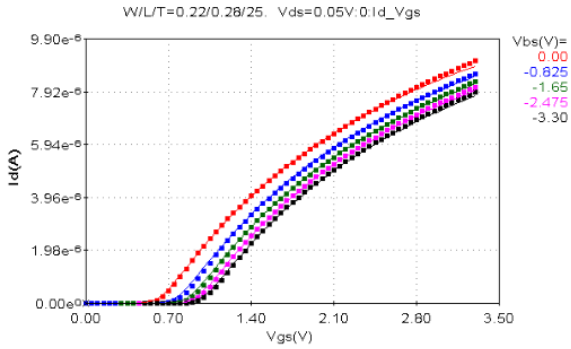
W/L/T=0.22/0.28/25. Vds=0.05V:0:Id_Vgs
Id(A)
Vgs(V)
Vbs(V)=
0.00
-0.825
-1.65
-2.475
-3.30

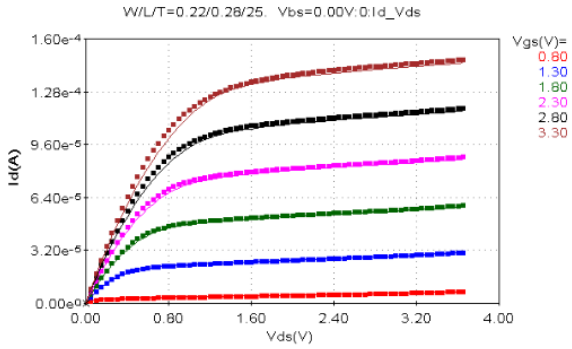
W/L/T=0.22/0.28/25. Vbs=0.00V:0:Id_Vds
Id(A)
Vds(V)
Vgs(V)=
0.80
1.30
1.80
2.30
2.80
3.30

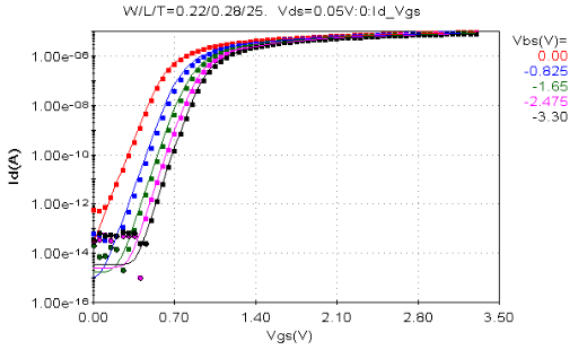
W/L/T=0.22/0.28/25. Vds=0.05V:0:Id_Vgs
Id(A)
Vgs(V)
Vbs(V)=
0.00
-0.825
-1.65
-2.475
-3.30

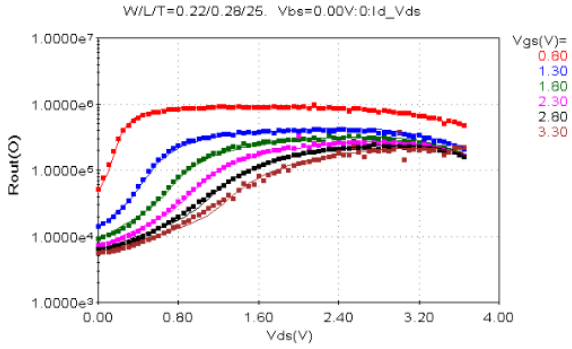
W/L/T=0.22/0.28/25. Vbs=0.00V:0:Id_Vds
Rout(O)
Vds(V)
Vgs(V)=
0.80
1.30
1.80
2.30
2.80
3.30

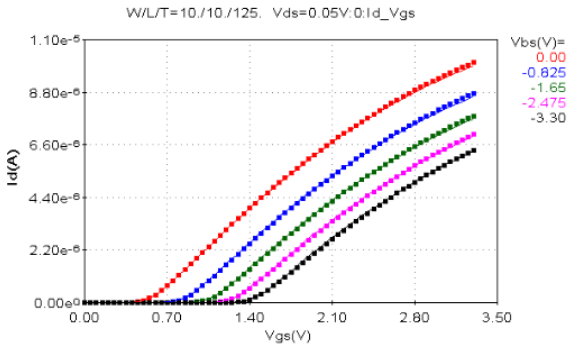
W/L/T=10./10./125. Vds=0.05V:0:Id_Vgs
Id(A)
Vgs(V)
Vbs(V)=
0.00
-0.825
-1.65
-2.475
-3.30

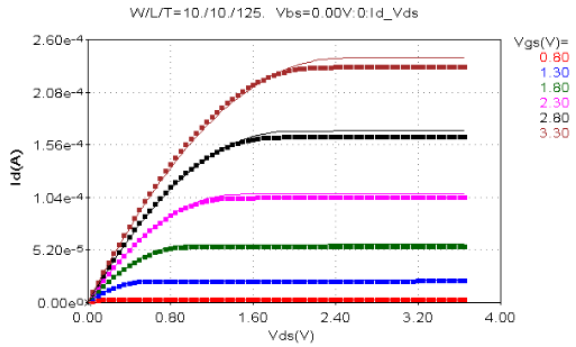
W/L/T=10./10./125. Vbs=0.00V:0:Id_Vds
Id(A)
Vds(V)
Vgs(V)=
0.80
1.30
1.80
2.30
2.80
3.30

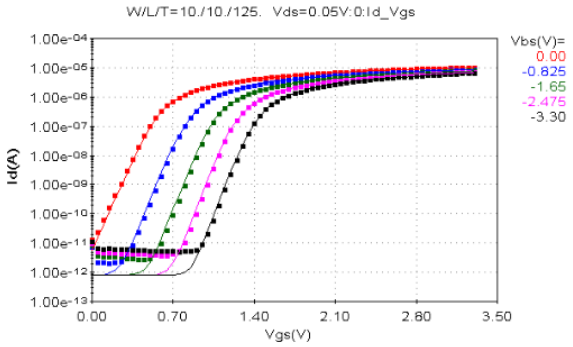
W/L/T=10./10./125. Vds=0.05V:0:Id_Vgs
Id(A)
Vgs(V)
Vbs(V)=
0.00
-0.825
-1.65
-2.475
-3.30

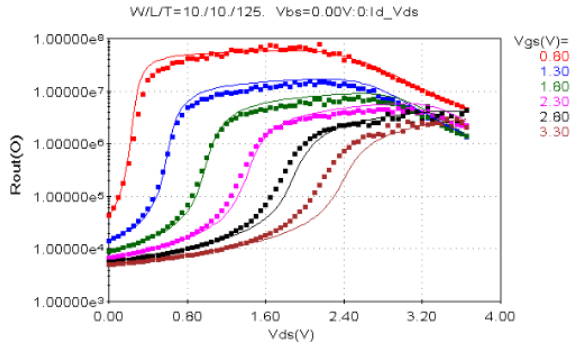
W/L/T=10./10./125. Vbs=0.00V:0:Id_Vds
Rout(O)
Vds(V)
Vgs(V)=
0.80
1.30
1.80
2.30
2.80
3.30

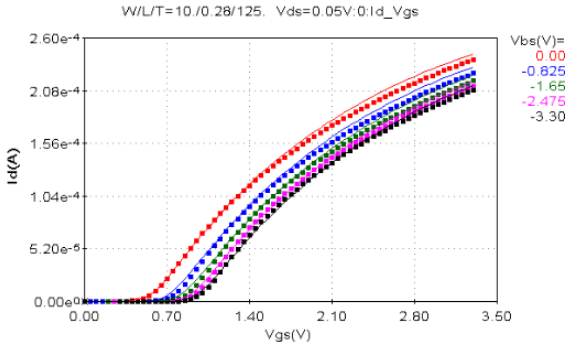
W/L/T=10./0.28/125. Vds=0.05V:0:Id_Vgs
Id(A)
Vgs(V)
Vbs(V)=
0.00
-0.825
-1.65
-2.475
-3.30

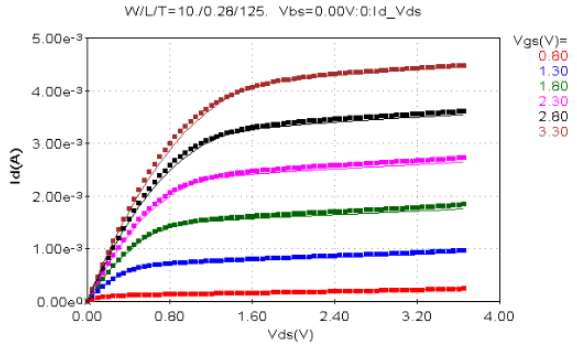
W/L/T=10./0.28/125. Vbs=0.00V:0:Id_Vds
Id(A)
Vds(V)
Vgs(V)=
0.80
1.30
1.80
2.30
2.80
3.30

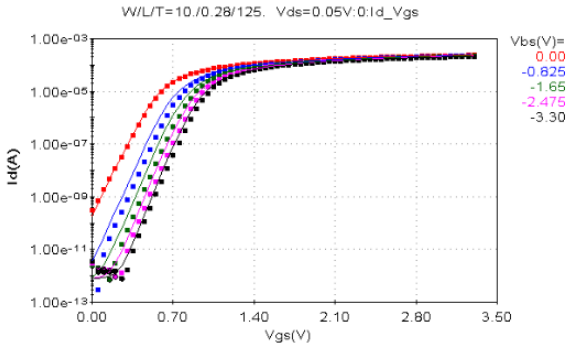
W/L/T=10./0.28/125. Vds=0.05V:0:Id_Vgs
Id(A)
Vgs(V)
Vbs(V)=
0.00
-0.825
-1.65
-2.475
-3.30

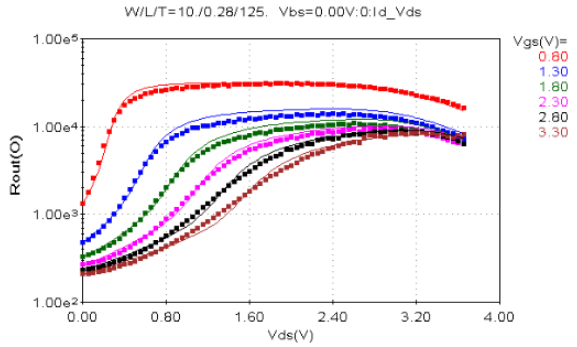
W/L/T=10./0.28/125. Vbs=0.00V:0:Id_Vds
Rout(O)
Vds(V)
Vgs(V)=
0.80
1.30
1.80
2.30
2.80
3.30

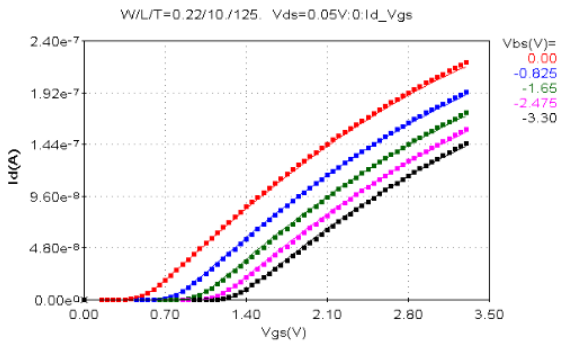
W/L/T=0.22/10./125. Vds=0.05V:0:Id_Vgs
Id(A)
Vgs(V)
Vbs(V)=
0.00
-0.825
-1.65
-2.475
-3.30

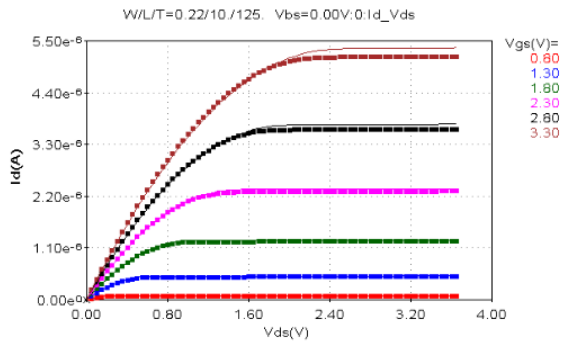
W/L/T=0.22/10./125. Vbs=0.00V:0:Id_Vds
Id(A)
Vds(V)
Vgs(V)=
0.80
1.30
1.80
2.30
2.80
3.30

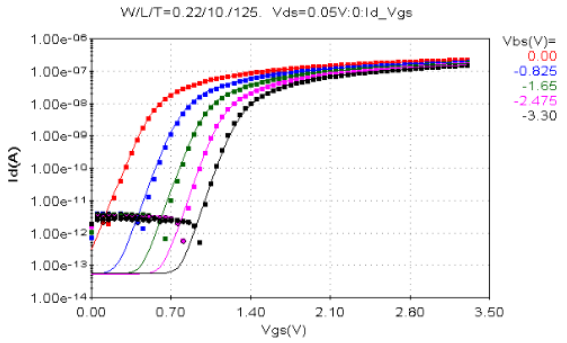
W/L/T=0.22/10./125. Vds=0.05V:0:Id_Vgs
Id(A)
Vgs(V)
Vbs(V)=
0.00
-0.825
-1.65
-2.475
-3.30

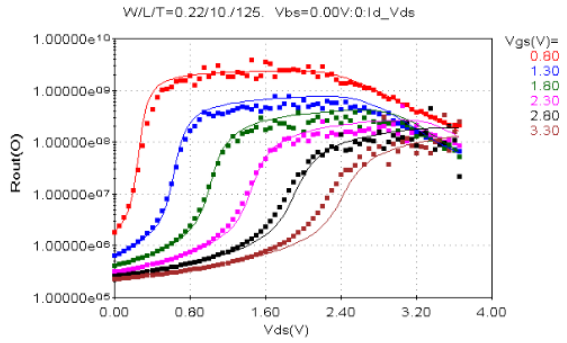
W/L/T=0.22/10./125. Vbs=0.00V:0:Id_Vds
Rout(O)
Vds(V)
Vgs(V)=
0.80
1.30
1.80
2.30
2.80
3.30

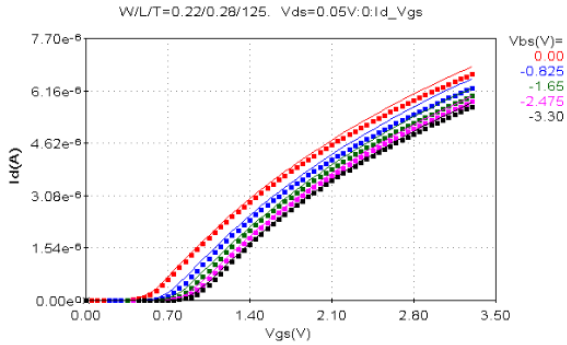
W/L/T=0.22/0.28/125. Vds=0.05V:0:Id_Vgs
Id(A)
Vgs(V)
Vbs(V)=
0.00
-0.825
-1.65
-2.475
-3.30

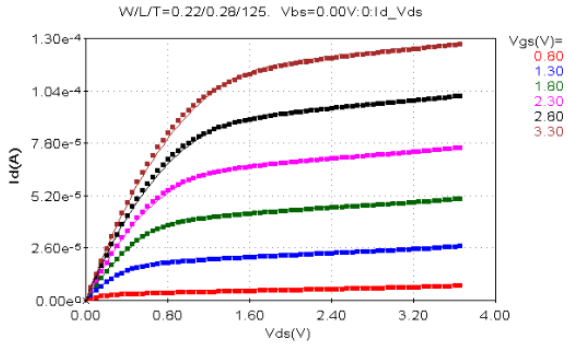
W/L/T=0.22/0.28/125. Vbs=0.00V:0:Id_Vds
Id(A)
Vds(V)
Vgs(V)=
0.80
1.30
1.80
2.30
2.80
3.30

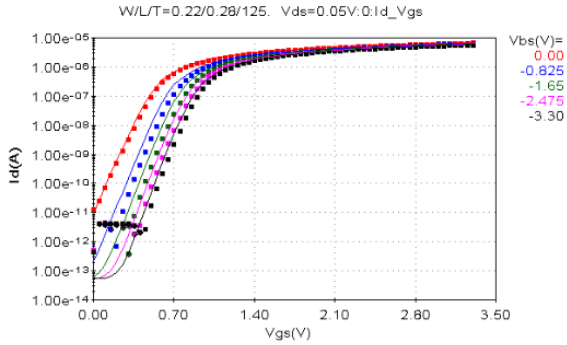
W/L/T=0.22/0.28/125. Vds=0.05V:0:Id_Vgs
Id(A)
Vgs(V)
Vbs(V)=
0.00
-0.825
-1.65
-2.475
-3.30

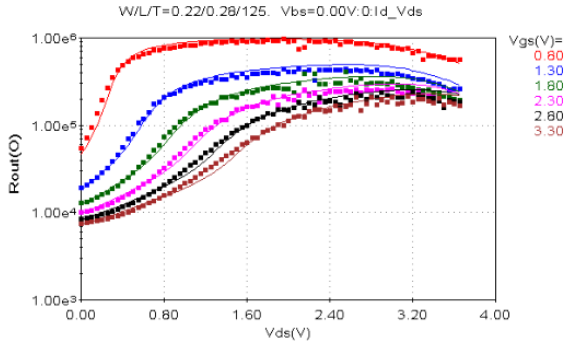
W/L/T=0.22/0.28/125. Vbs=0.00V:0:Id_Vds
Rout(O)
Vds(V)
Vgs(V)=
0.80
1.30
1.80
2.30
2.80
3.30

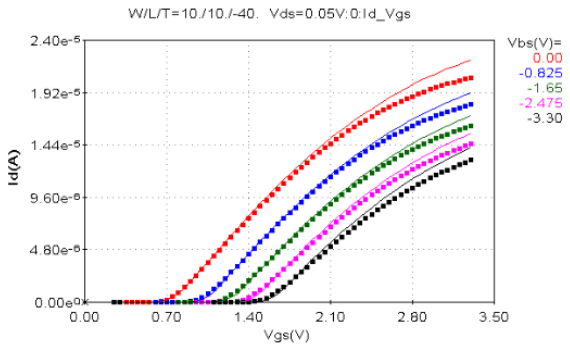
W/L/T=10./10./-40. Vds=0.05V:0:Id_Vgs
Id(A)
Vgs(V)
Vbs(V)=
0.00
-0.825
-1.65
-2.475
-3.30

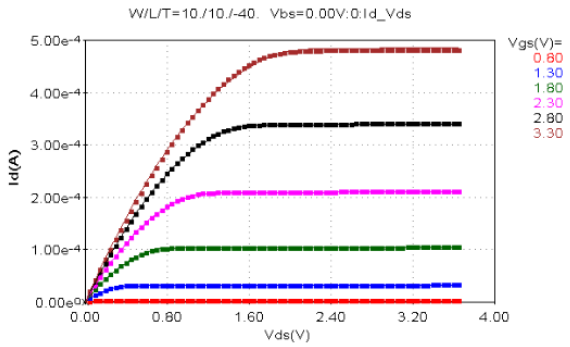
W/L/T=10./10./-40. Vbs=0.00V:0:Id_Vds
Id(A)
Vds(V)
Vgs(V)=
0.80
1.30
1.80
2.30
2.80
3.30

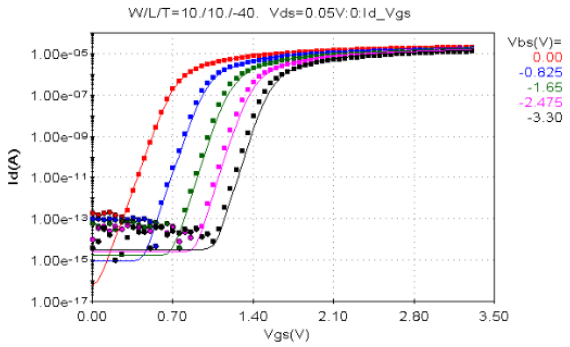
W/L/T=10./10./-40. Vds=0.05V:0:Id_Vgs
Id(A)
Vgs(V)
Vbs(V)=
0.00
-0.825
-1.65
-2.475
-3.30

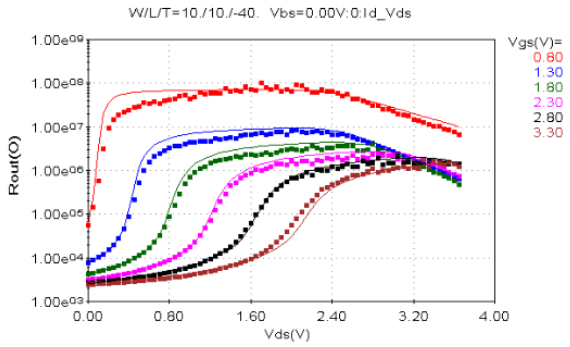
W/L/T=10./10./-40. Vbs=0.00V:0:Id_Vds
Rout(O)
Vds(V)
Vgs(V)=
0.80
1.30
1.80
2.30
2.80
3.30

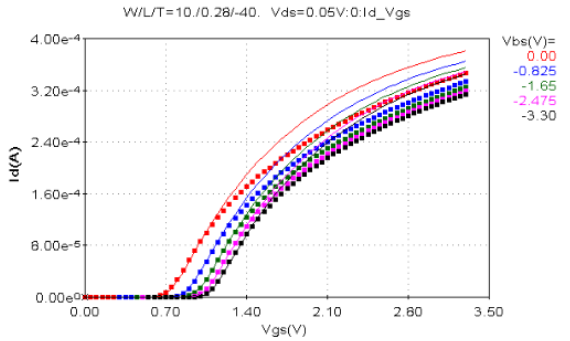
W/L/T=10./0.28/-40. Vds=0.05V:0:Id_Vgs
Id(A)
Vgs(V)
Vbs(V)=
0.00
-0.825
-1.65
-2.475
-3.30

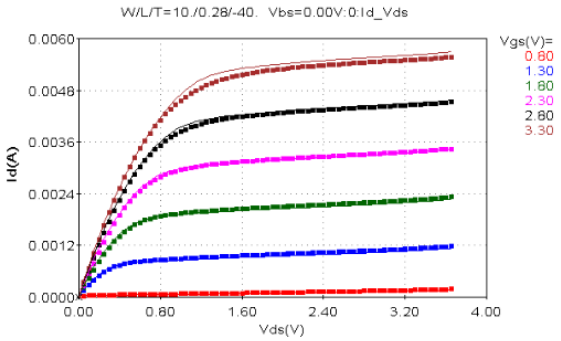
W/L/T=10./0.28/-40. Vbs=0.00V:0:Id_Vds
Id(A)
Vds(V)
Vgs(V)=
0.80
1.30
1.80
2.30
2.80
3.30

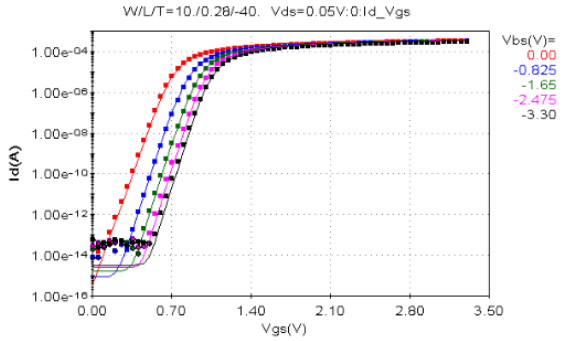
W/L/T=10./0.28/-40. Vds=0.05V:0:Id_Vgs
Id(A)
Vgs(V)
Vbs(V)=
0.00
-0.825
-1.65
-2.475
-3.30

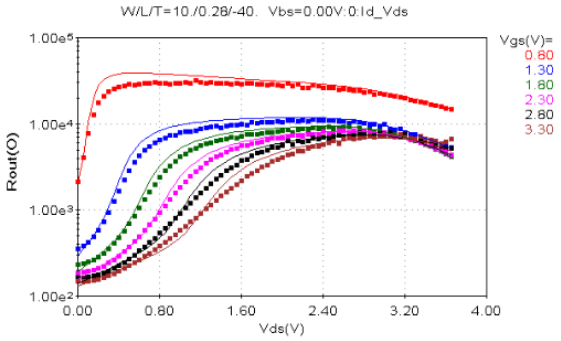
W/L/T=10./0.28/-40. Vbs=0.00V:0:Id_Vds
Rout(O)
Vds(V)
Vgs(V)=
0.80
1.30
1.80
2.30
2.80
3.30

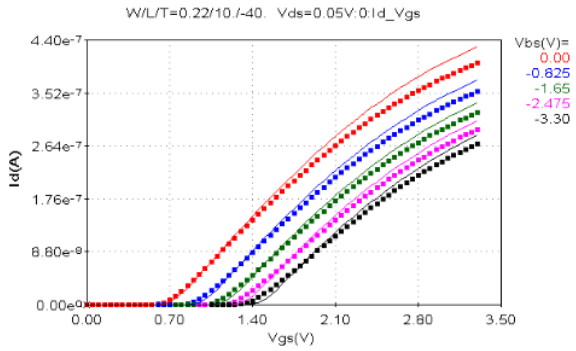
W/L/T=0.22/10./-40. Vds=0.05V:0:Id_Vgs
Id(A)
Vgs(V)
Vbs(V)=
0.00
-0.825
-1.65
-2.475
-3.30

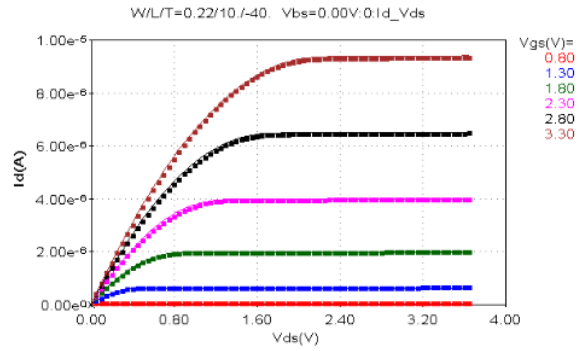
W/L/T=0.22/10./-40. Vbs=0.00V:0:Id_Vds
Id(A)
Vds(V)
Vgs(V)=
0.80
1.30
1.80
2.30
2.80
3.30

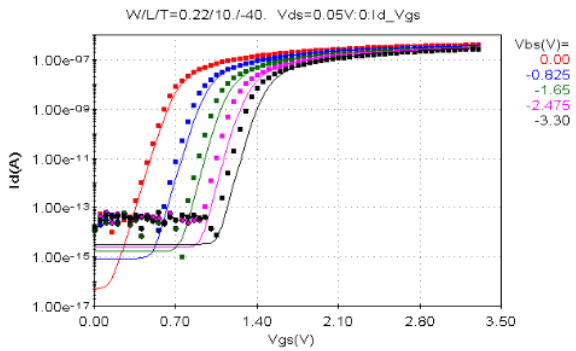
W/L/T=0.22/10./-40. Vds=0.05V:0:Id_Vgs
Id(A)
Vgs(V)
Vbs(V)=
0.00
-0.825
-1.65
-2.475
-3.30

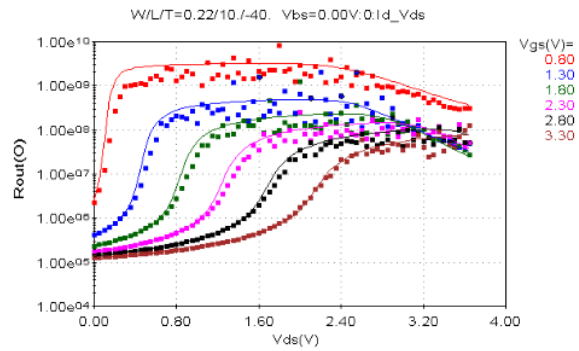
W/L/T=0.22/10./-40. Vbs=0.00V:0:Id_Vds
Rout(O)
Vds(V)
Vgs(V)=
0.80
1.30
1.80
2.30
2.80
3.30

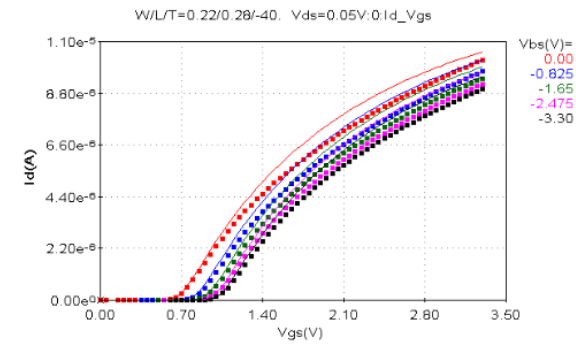
W/L/T=0.22/0.28/-40. Vds=0.05V:0:Id_Vgs
Id(A)
Vgs(V)
Vbs(V)=
0.00
-0.825
-1.65
-2.475
-3.30

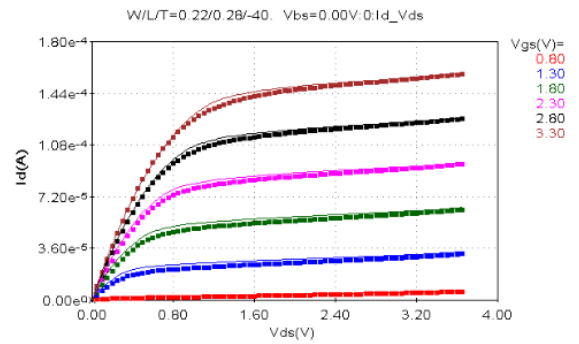
W/L/T=0.22/0.28/-40. Vbs=0.00V:0:Id_Vds
Id(A)
Vds(V)
Vgs(V)=
0.80
1.30
1.80
2.30
2.80
3.30

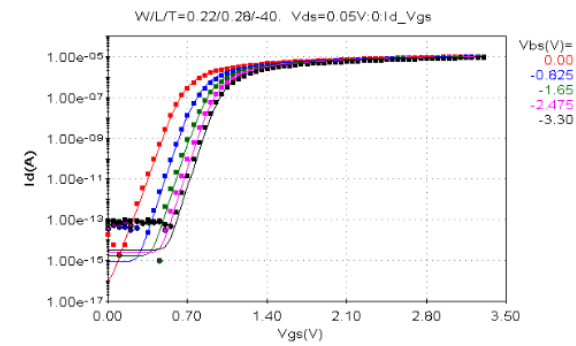
W/L/T=0.22/0.28/-40. Vds=0.05V:0:Id_Vgs
Id(A)
Vgs(V)
Vbs(V)=
0.00
-0.825
-1.65
-2.475
-3.30

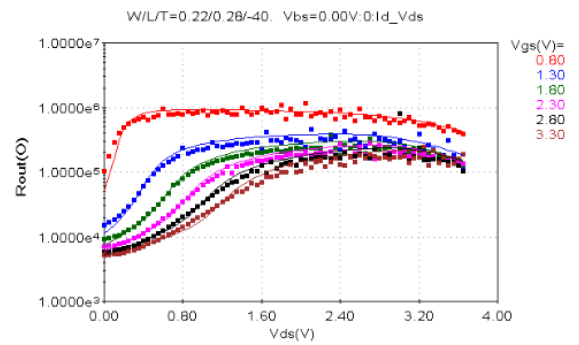
W/L/T=0.22/0.28/-40. Vbs=0.00V:0:Id_Vds
Rout(O)
Vds(V)
Vgs(V)=
0.80
1.30
1.80
2.30
2.80
3.30

8.1.1.3 l/f Noise - Characteristics

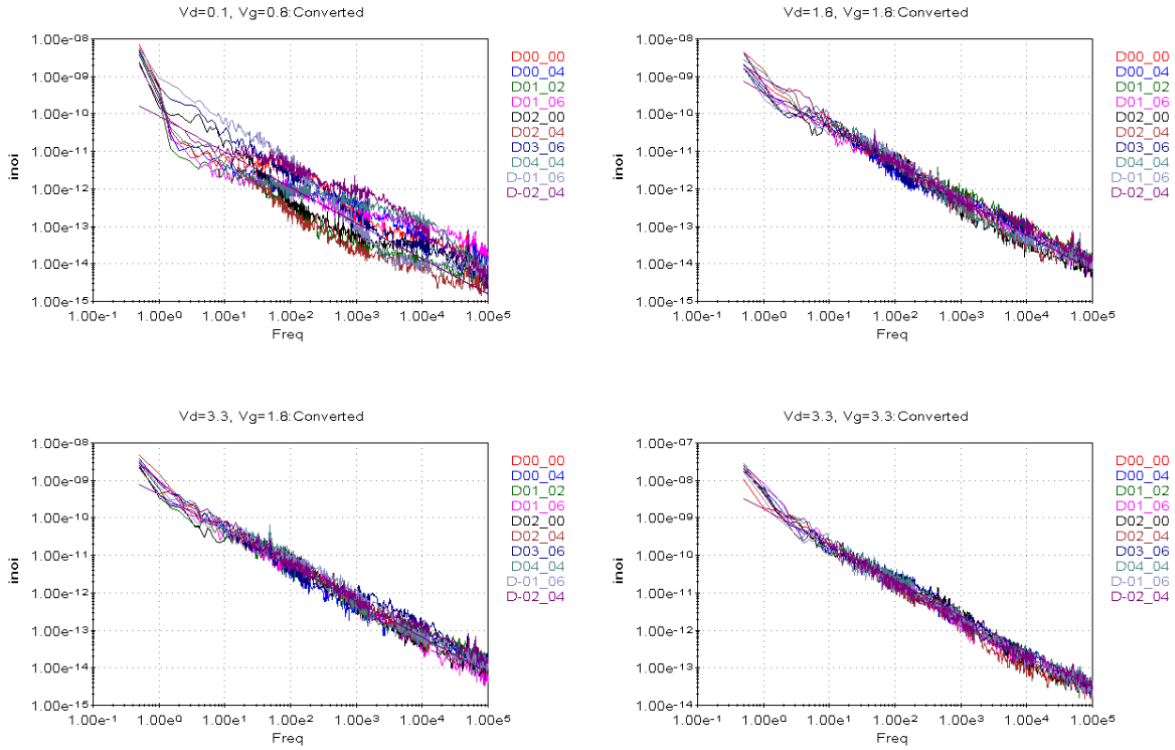

8.1.2 pfet_03v3 (3.3V)

8.1.2.1 CV - Characteristics

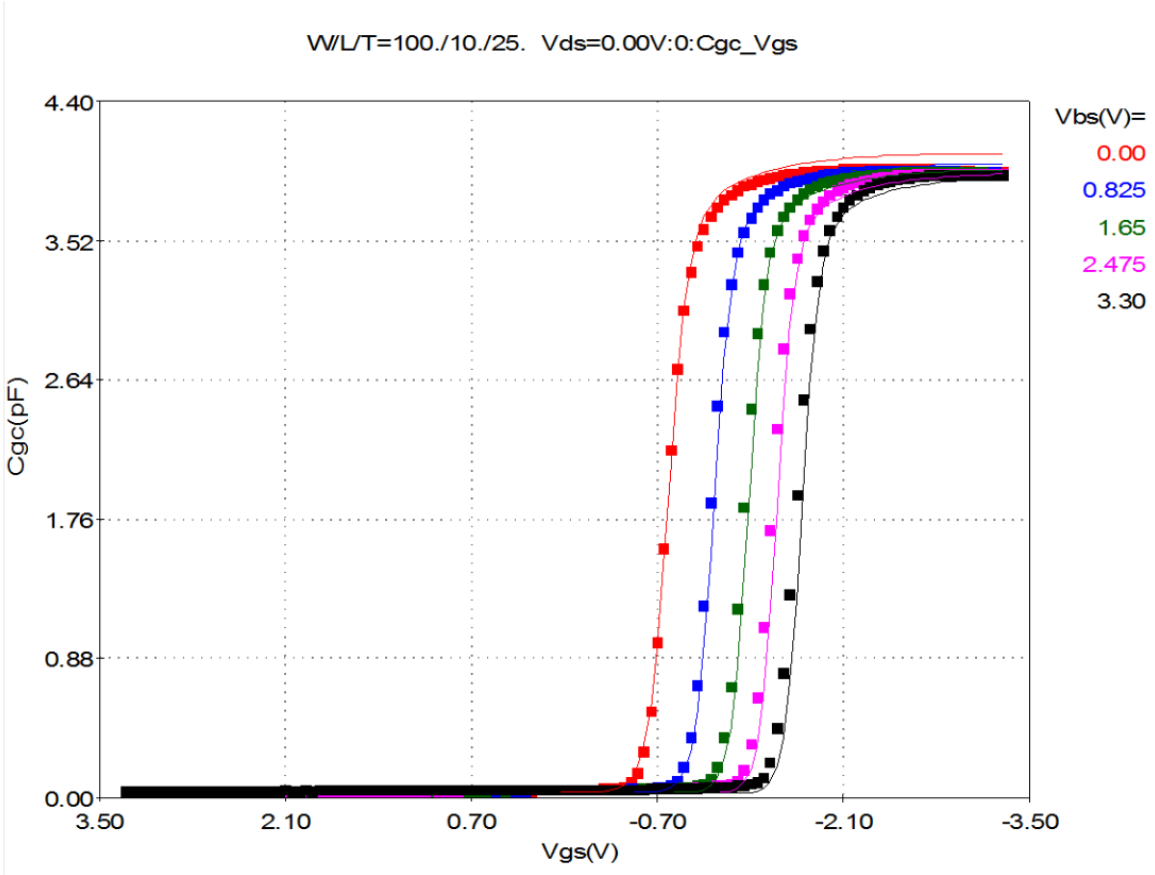

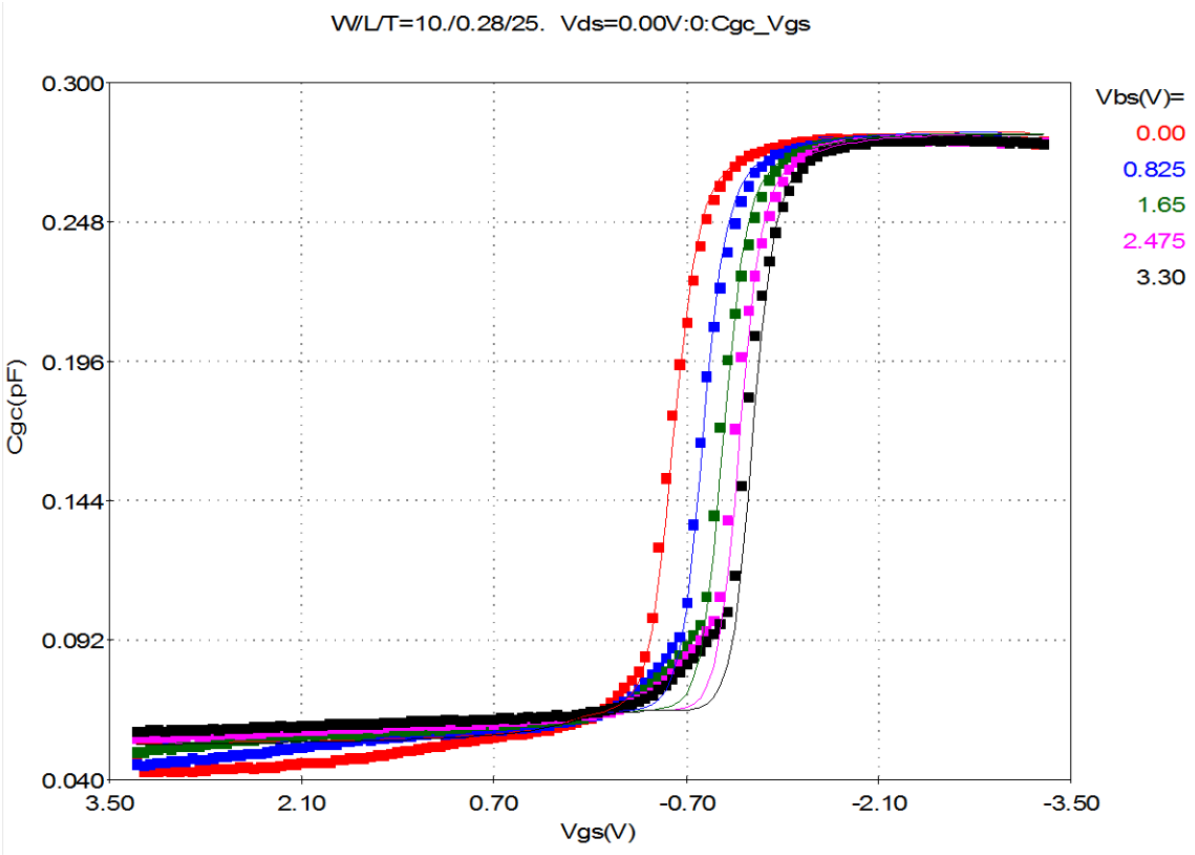
W/L/T=10./0.28/25. Vds=0.00V:0:Cgc_Vgs
0.300
0.248
0.196
0.144
0.092
0.040
Cgc(pF)
3.50
2.10
0.70
-0.70
-2.10
-3.50
Vgs(V)
Vbs(V)=
0.00
0.825
1.65
2.475
3.30

8.1.2.2 IV - Characteristics

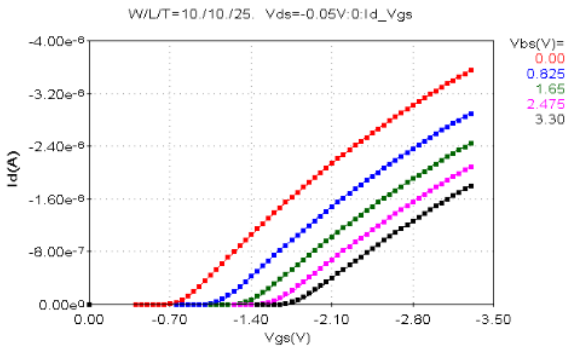

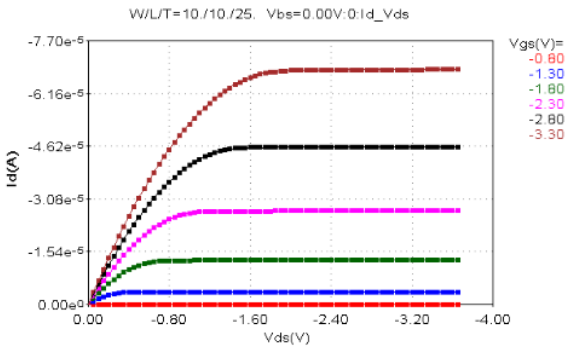

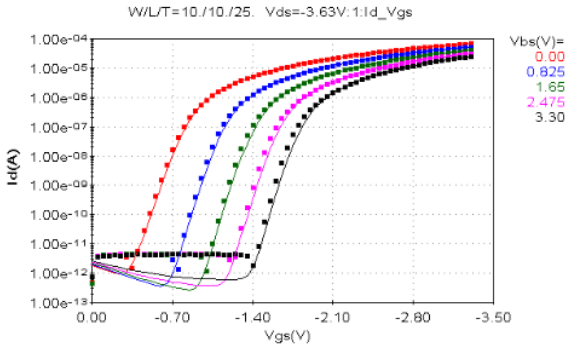

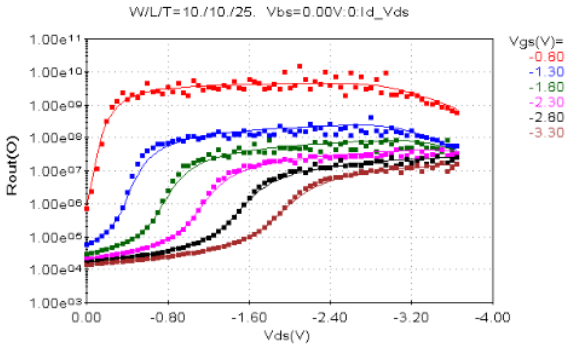

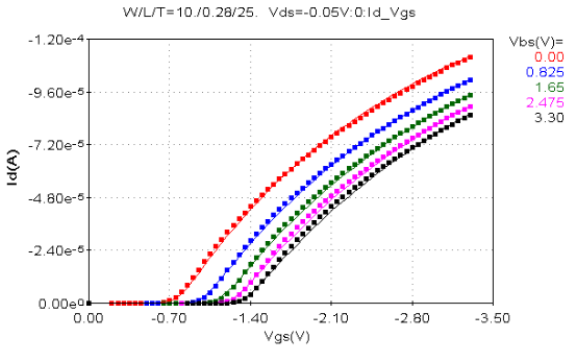

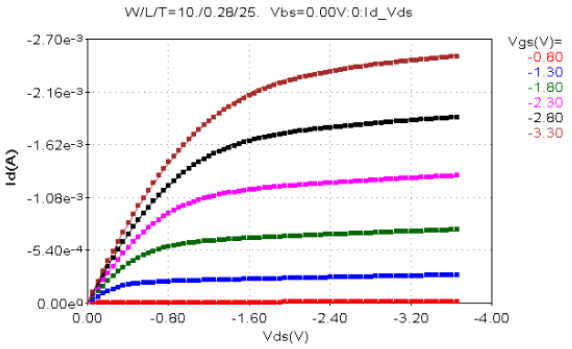

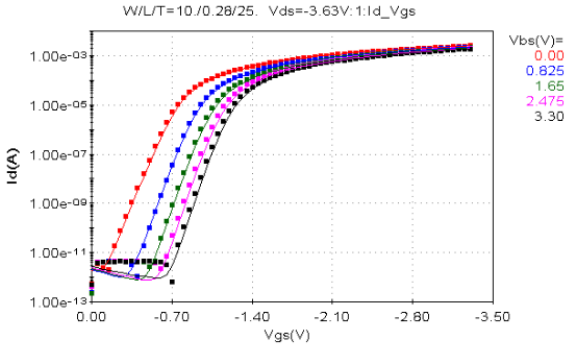

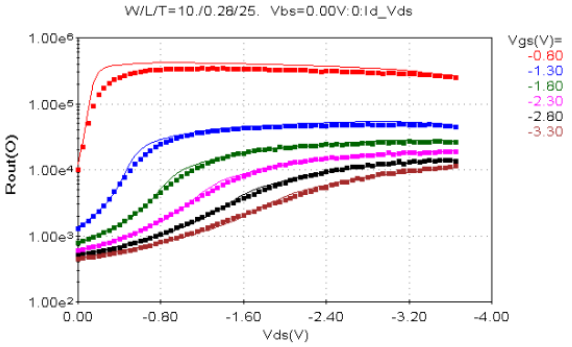

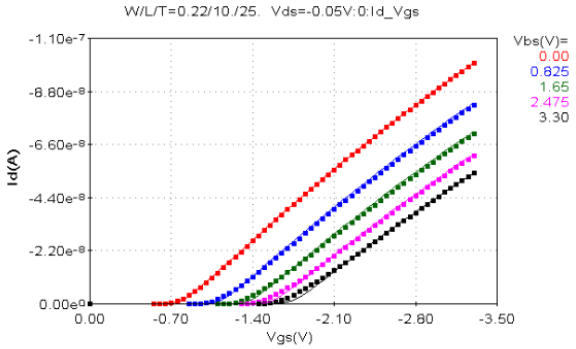
W/L/T=0.22/10./25. Vds=-0.05V:0:Id_Vgs
Id(A)
Vgs(V)
Vbs(V)=
0.00
0.825
1.65
2.475
3.30

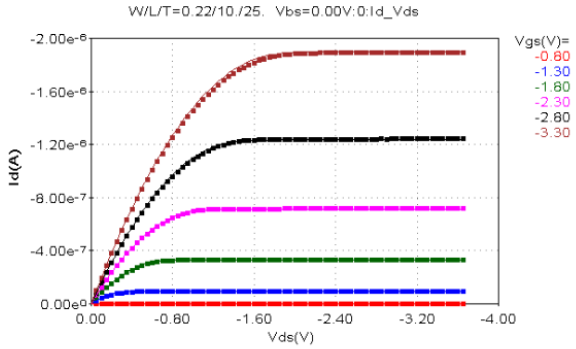
W/L/T=0.22/10./25. Vbs=0.00V:0:Id_Vds
Id(A)
Vds(V)
Vgs(V)=
-0.80
-1.30
-1.80
-2.30
-2.80
-3.30

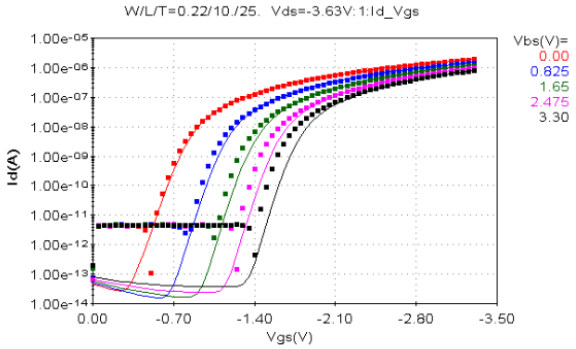
W/L/T=0.22/10./25. Vds=-3.63V:1:Id_Vgs
Id(A)
Vgs(V)
Vbs(V)=
0.00
0.825
1.65
2.475
3.30

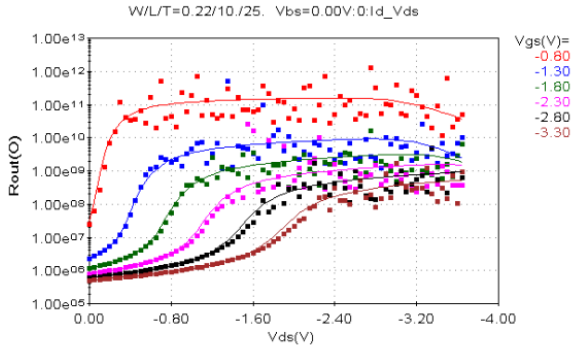
W/L/T=0.22/10./25. Vbs=0.00V:0:Id_Vds
Rout(O)
Vds(V)
Vgs(V)=
-0.80
-1.30
-1.80
-2.30
-2.80
-3.30

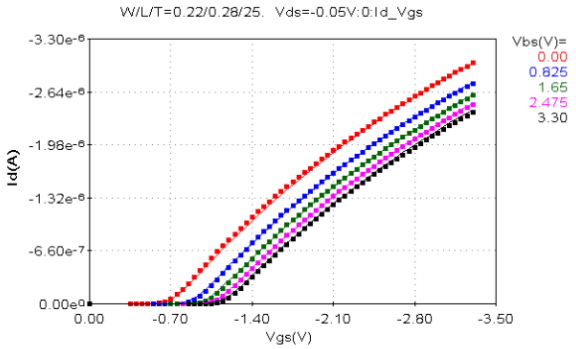
W/L/T=0.22/0.28/25. Vds=-0.05V:0:Id_Vgs
Id(A)
Vgs(V)
Vbs(V)=
0.00
0.825
1.65
2.475
3.30

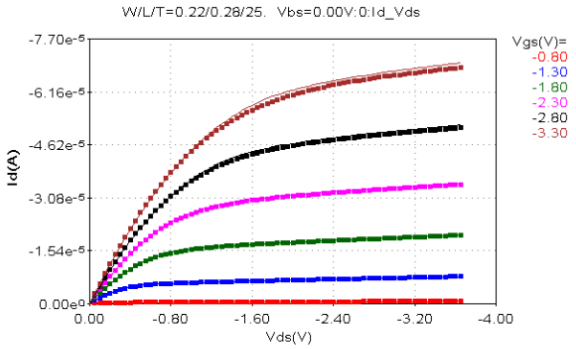
W/L/T=0.22/0.28/25. Vbs=0.00V:0:Id_Vds
Id(A)
Vds(V)
Vgs(V)=
-0.80
-1.30
-1.80
-2.30
-2.80
-3.30

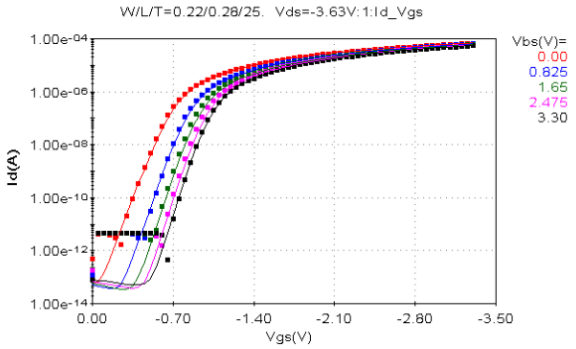
W/L/T=0.22/0.28/25. Vds=-3.63V:1:Id_Vgs
Id(A)
Vgs(V)
Vbs(V)=
0.00
0.825
1.65
2.475
3.30

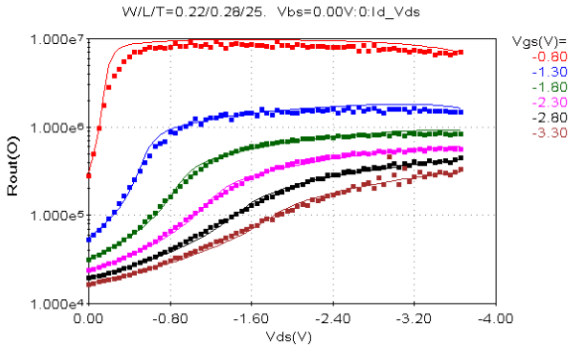
W/L/T=0.22/0.28/25. Vbs=0.00V:0:Id_Vds
Rout(O)
Vds(V)
Vgs(V)=
-0.80
-1.30
-1.80
-2.30
-2.80
-3.30

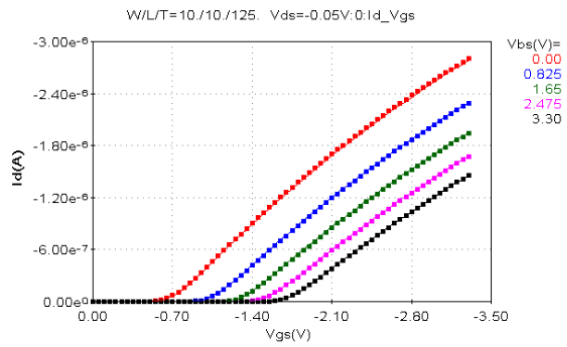
W/L/T=10./10./125. Vds=-0.05V:0:Id_Vgs
Id(A)
Vgs(V)
Vbs(V)=
0.00
0.825
1.65
2.475
3.30

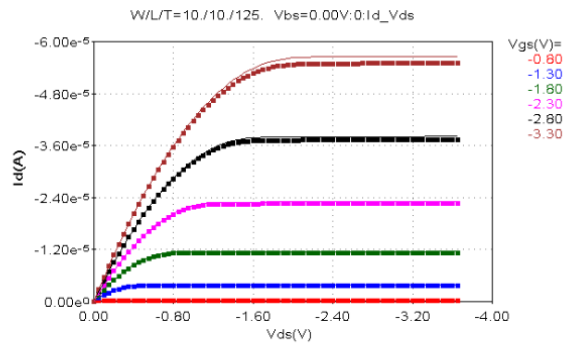
W/L/T=10./10./125. Vbs=0.00V:0:Id_Vds
Id(A)
Vds(V)
Vgs(V)=
-0.80
-1.30
-1.80
-2.30
-2.80
-3.30

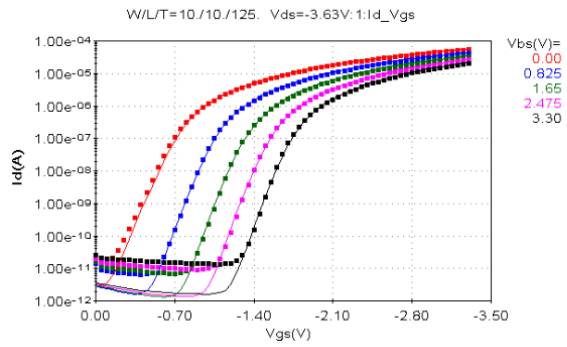
W/L/T=10./10./125. Vds=-3.63V:1:Id_Vgs
Id(A)
Vgs(V)
Vbs(V)=
0.00
0.825
1.65
2.475
3.30

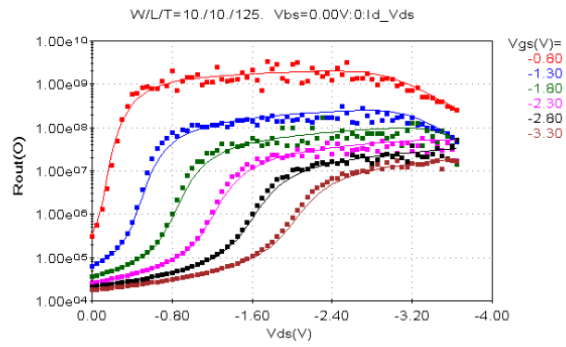
W/L/T=10./10./125. Vbs=0.00V:0:Id_Vds
Rout(O)
Vds(V)
Vgs(V)=
-0.80
-1.30
-1.80
-2.30
-2.80
-3.30

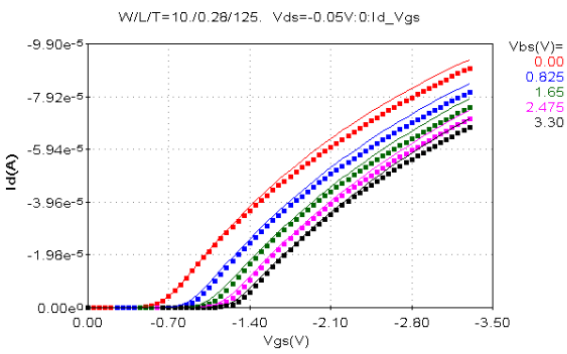
W/L/T=10./0.28/125. Vds=-0.05V:0:Id_Vgs
Id(A)
Vgs(V)
Vbs(V)=
0.00
0.825
1.65
2.475
3.30

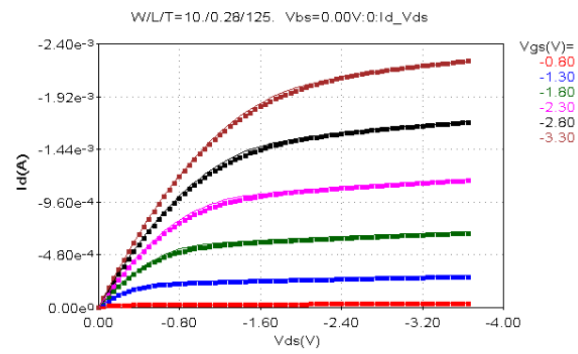
W/L/T=10./0.28/125. Vbs=0.00V:0:Id_Vds
Id(A)
Vds(V)
Vgs(V)=
-0.80
-1.30
-1.80
-2.30
-2.80
-3.30

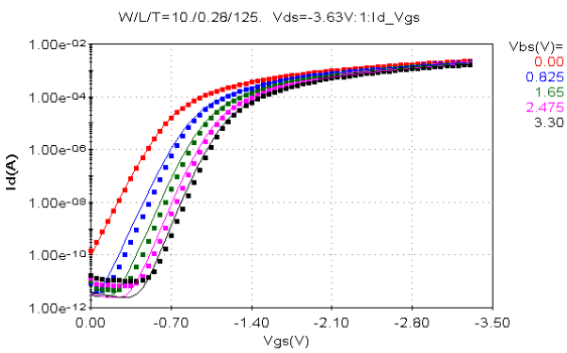
W/L/T=10./0.28/125. Vds=-3.63V:1:Id_Vgs
Id(A)
Vgs(V)
Vbs(V)=
0.00
0.825
1.65
2.475
3.30

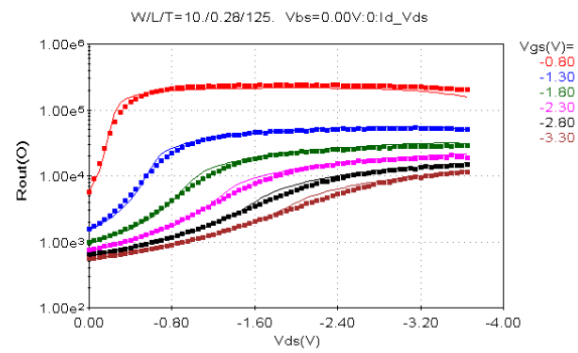
W/L/T=10./0.28/125. Vbs=0.00V:0:Id_Vds
Rout(O)
Vds(V)
Vgs(V)=
-0.80
-1.30
-1.80
-2.30
-2.80
-3.30

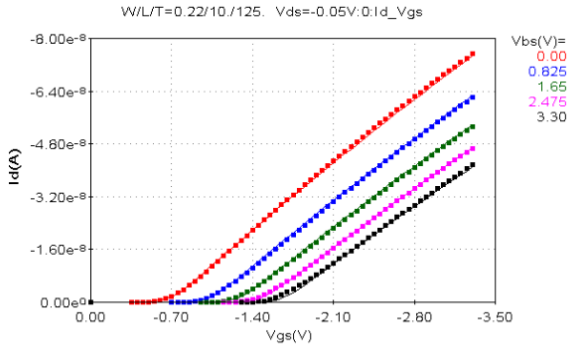
W/L/T=0.22/10./125. Vds=-0.05V:0:Id_Vgs
Id(A)
Vgs(V)
Vbs(V)=
0.00
0.825
1.65
2.475
3.30

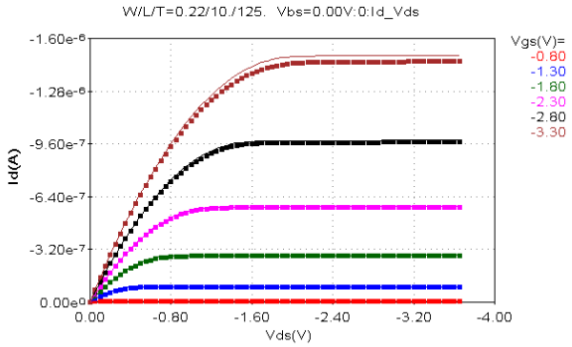
W/L/T=0.22/10./125. Vbs=0.00V:0:Id_Vds
Id(A)
Vds(V)
Vgs(V)=
-0.80
-1.30
-1.80
-2.30
-2.80
-3.30

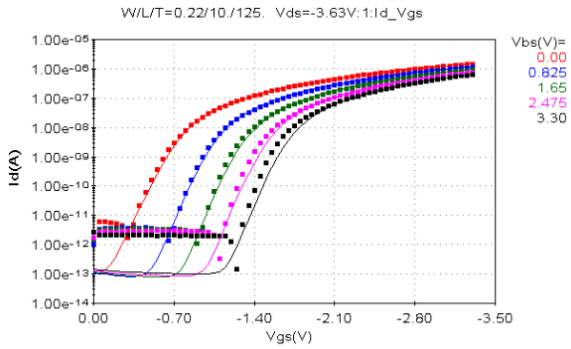
W/L/T=0.22/10./125. Vds=-3.63V:1:Id_Vgs
Id(A)
Vgs(V)
Vbs(V)=
0.00
0.825
1.65
2.475
3.30

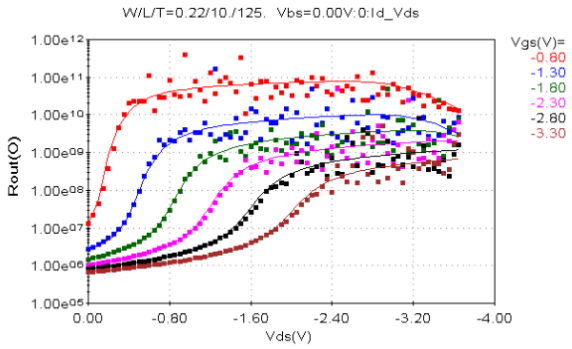
W/L/T=0.22/10./125. Vbs=0.00V:0:Id_Vds
Rout(O)
Vds(V)
Vgs(V)=
-0.80
-1.30
-1.80
-2.30
-2.80
-3.30

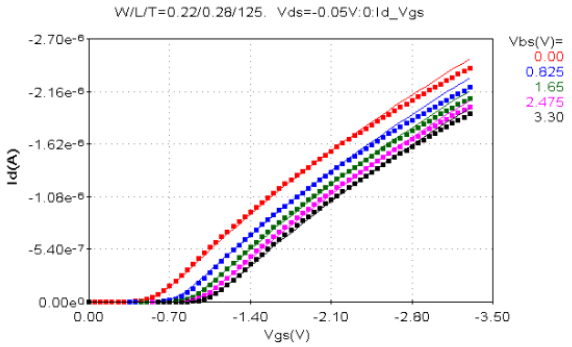
W/L/T=0.22/0.28/125. Vds=-0.05V:0:Id_Vgs
Id(A)
Vgs(V)
Vbs(V)=
0.00
0.825
1.65
2.475
3.30

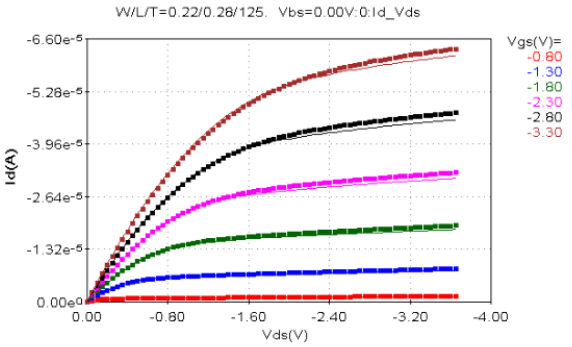
W/L/T=0.22/0.28/125. Vbs=0.00V:0:Id_Vds
Id(A)
Vds(V)
Vgs(V)=
-0.80
-1.30
-1.80
-2.30
-2.80
-3.30

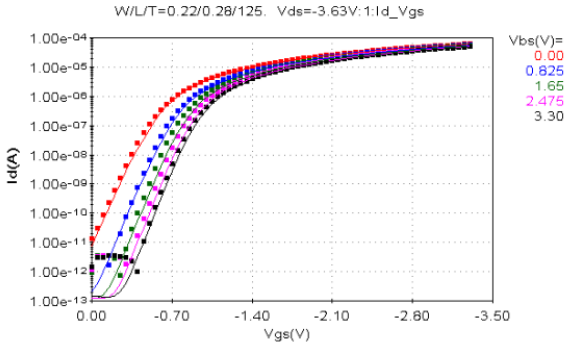
W/L/T=0.22/0.28/125. Vds=-3.63V:1:Id_Vgs
Id(A)
Vgs(V)
Vbs(V)=
0.00
0.825
1.65
2.475
3.30

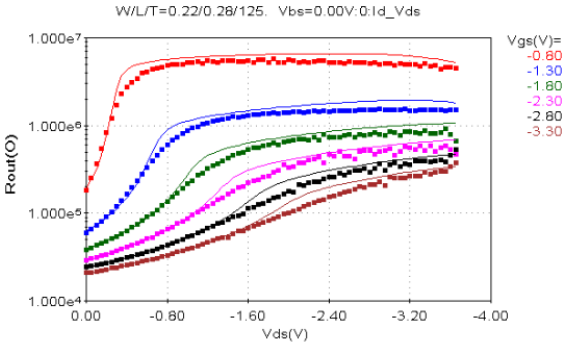
W/L/T=0.22/0.28/125. Vbs=0.00V:0:Id_Vds
Rout(O)
Vds(V)
Vgs(V)=
-0.80
-1.30
-1.80
-2.30
-2.80
-3.30

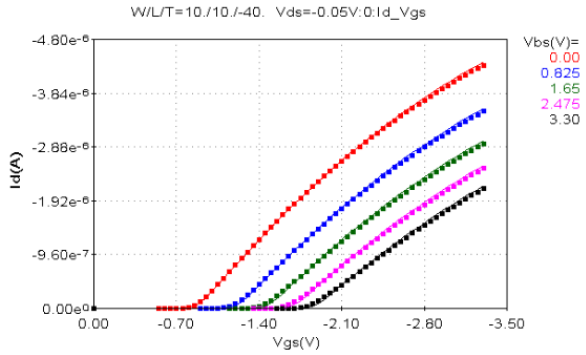
W/L/T=10./10./-40. Vds=-0.05V:0:Id_Vgs
Id(A)
Vgs(V)
Vbs(V)=
0.00
0.825
1.65
2.475
3.30

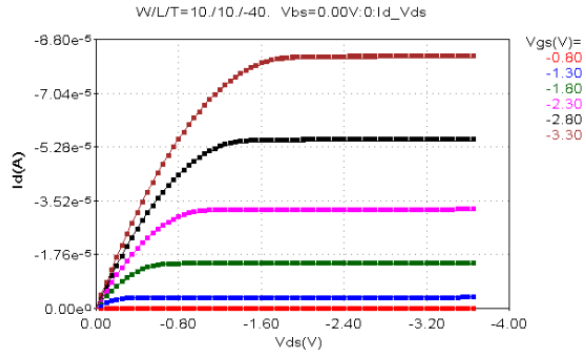
W/L/T=10./10./-40. Vbs=0.00V:0:Id_Vds
Id(A)
Vds(V)
Vgs(V)=
-0.80
-1.30
-1.80
-2.30
-2.80
-3.30

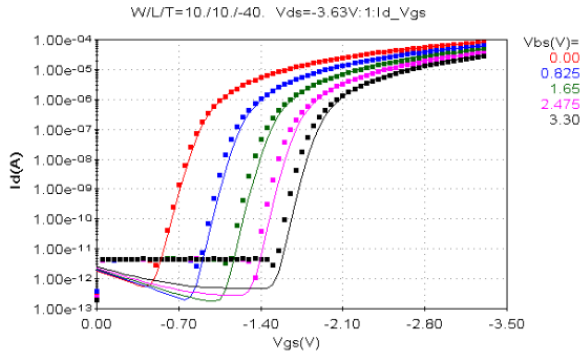
W/L/T=10./10./-40. Vds=-3.63V:1:Id_Vgs
Id(A)
Vgs(V)
Vbs(V)=
0.00
0.825
1.65
2.475
3.30

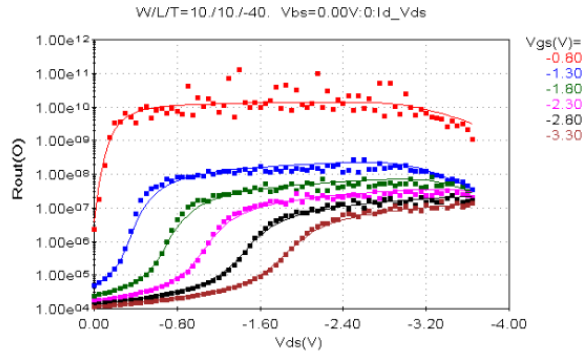
W/L/T=10./10./-40. Vbs=0.00V:0:Id_Vds
Rout(O)
Vds(V)
Vgs(V)=
-0.80
-1.30
-1.80
-2.30
-2.80
-3.30

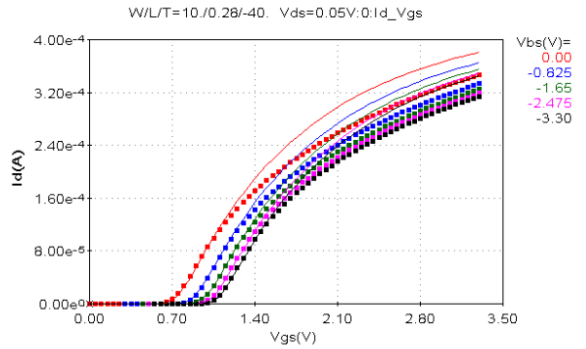
W/L/T=10./0.28/-40. Vds=0.05V:0:Id_Vgs
Id(A)
Vgs(V)
Vbs(V)=
0.00
-0.825
-1.65
-2.475
-3.30

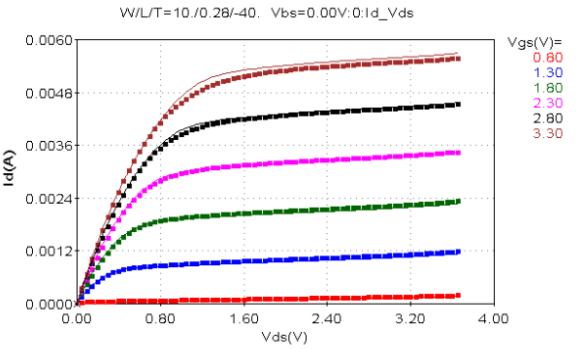
W/L/T=10./0.28/-40. Vbs=0.00V:0:Id_Vds
Id(A)
Vds(V)
Vgs(V)=
0.80
1.30
1.80
2.30
2.80
3.30

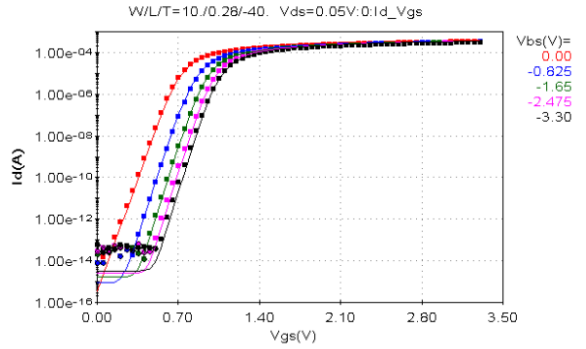
W/L/T=10./0.28/-40. Vds=0.05V:0:Id_Vgs
Id(A)
Vgs(V)
Vbs(V)=
0.00
-0.825
-1.65
-2.475
-3.30

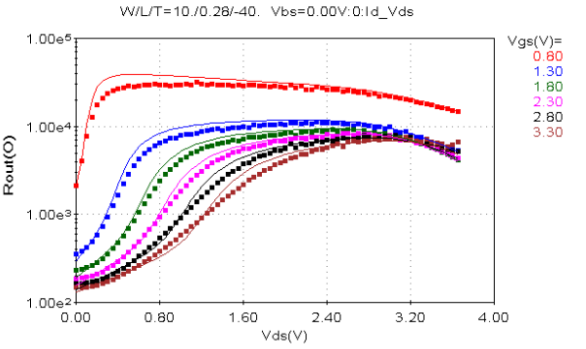
W/L/T=10./0.28/-40. Vbs=0.00V:0:Id_Vds
Rout(O)
Vds(V)
Vgs(V)=
0.80
1.30
1.80
2.30
2.80
3.30

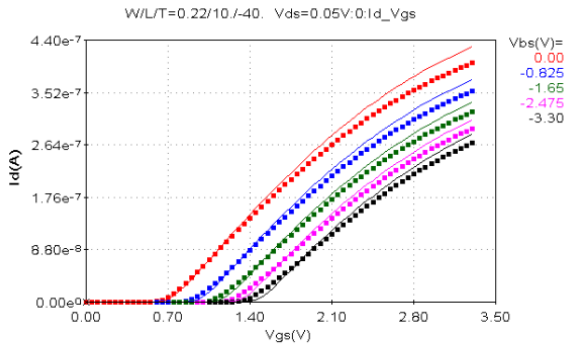
W/L/T=0.22/10./-40. Vds=0.05V:0:Id_Vgs
Id(A)
Vgs(V)
Vbs(V)=
0.00
-0.825
-1.65
-2.475
-3.30

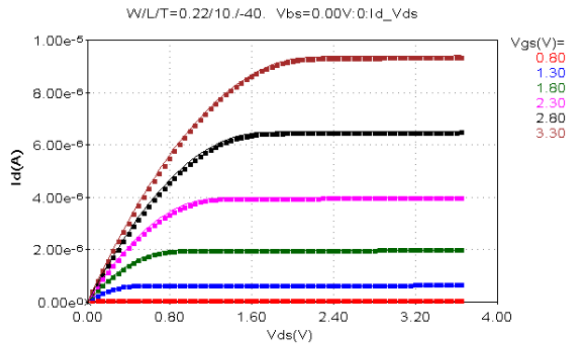
W/L/T=0.22/10./-40. Vbs=0.00V:0:Id_Vds
Id(A)
Vds(V)
Vgs(V)=
0.80
1.30
1.80
2.30
2.80
3.30

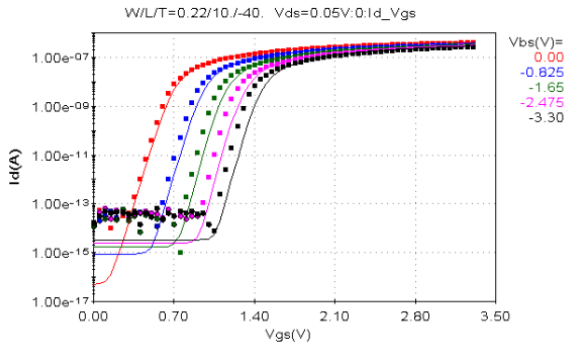
W/L/T=0.22/10./-40. Vds=0.05V:0:Id_Vgs
Id(A)
Vgs(V)
Vbs(V)=
0.00
-0.825
-1.65
-2.475
-3.30

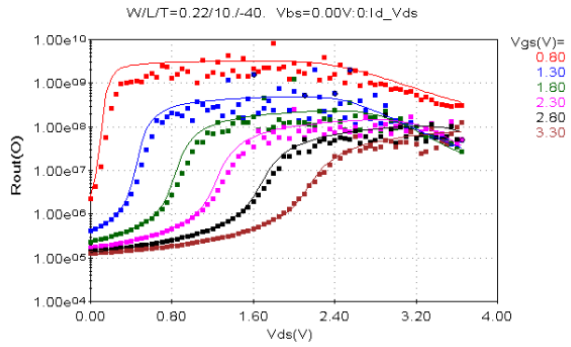
W/L/T=0.22/10./-40. Vbs=0.00V:0:Id_Vds
Rout(O)
Vds(V)
Vgs(V)=
0.80
1.30
1.80
2.30
2.80
3.30

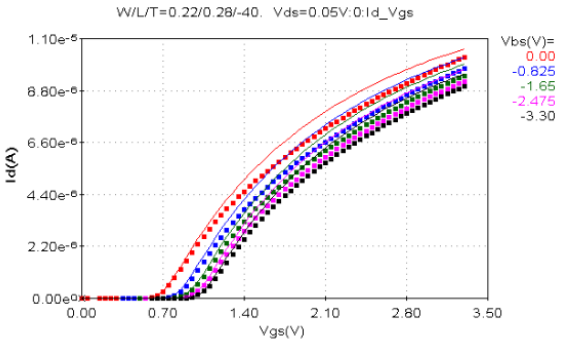
W/L/T=0.22/0.28/-40. Vds=0.05V:0:Id_Vgs
Id(A)
Vgs(V)
Vbs(V)=
0.00
-0.825
-1.65
-2.475
-3.30

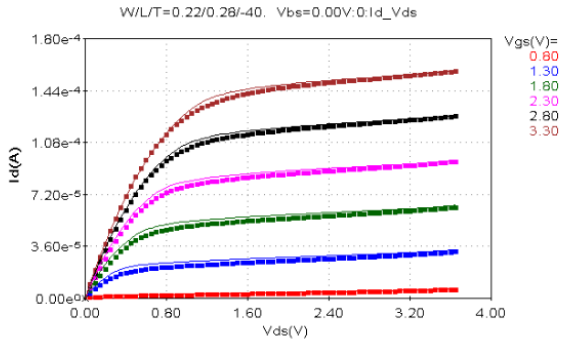
W/L/T=0.22/0.28/-40. Vbs=0.00V:0:Id_Vds
Id(A)
Vds(V)
Vgs(V)=
0.80
1.30
1.80
2.30
2.80
3.30

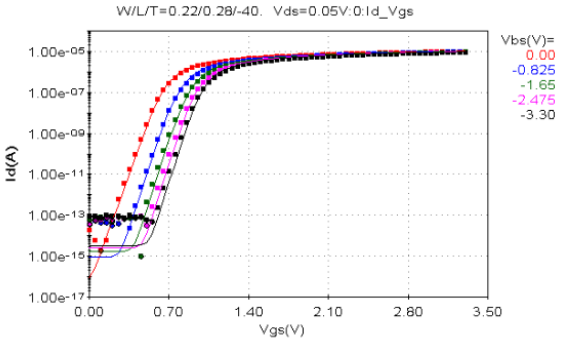
W/L/T=0.22/0.28/-40. Vds=0.05V:0:Id_Vgs
Id(A)
Vgs(V)
Vbs(V)=
0.00
-0.825
-1.65
-2.475
-3.30

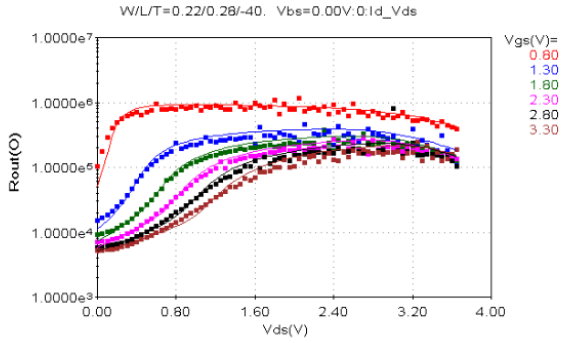
W/L/T=0.22/0.28/-40. Vbs=0.00V:0:Id_Vds
Rout(O)
Vds(V)
Vgs(V)=
0.80
1.30
1.80
2.30
2.80
3.30

8.1.2.3 I/f Noise - Characteristics

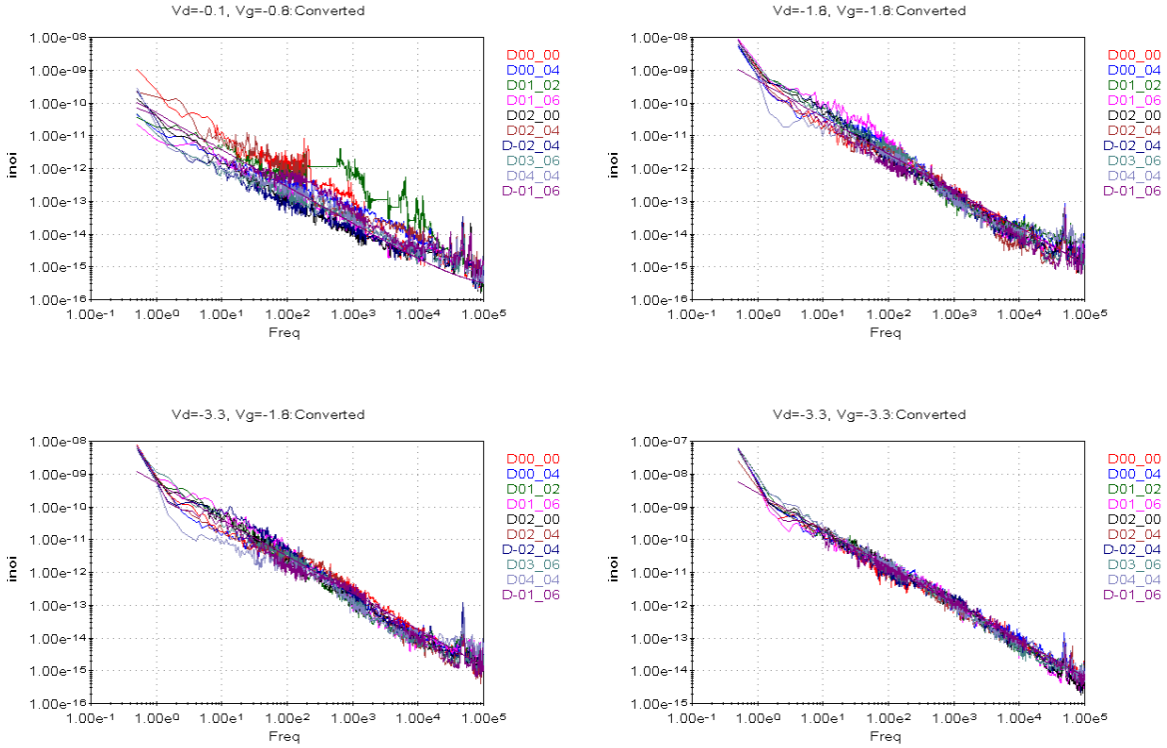

8.1.3 nfet_06v0 (6.0V)

8.1.3.1 CV - Characteristics

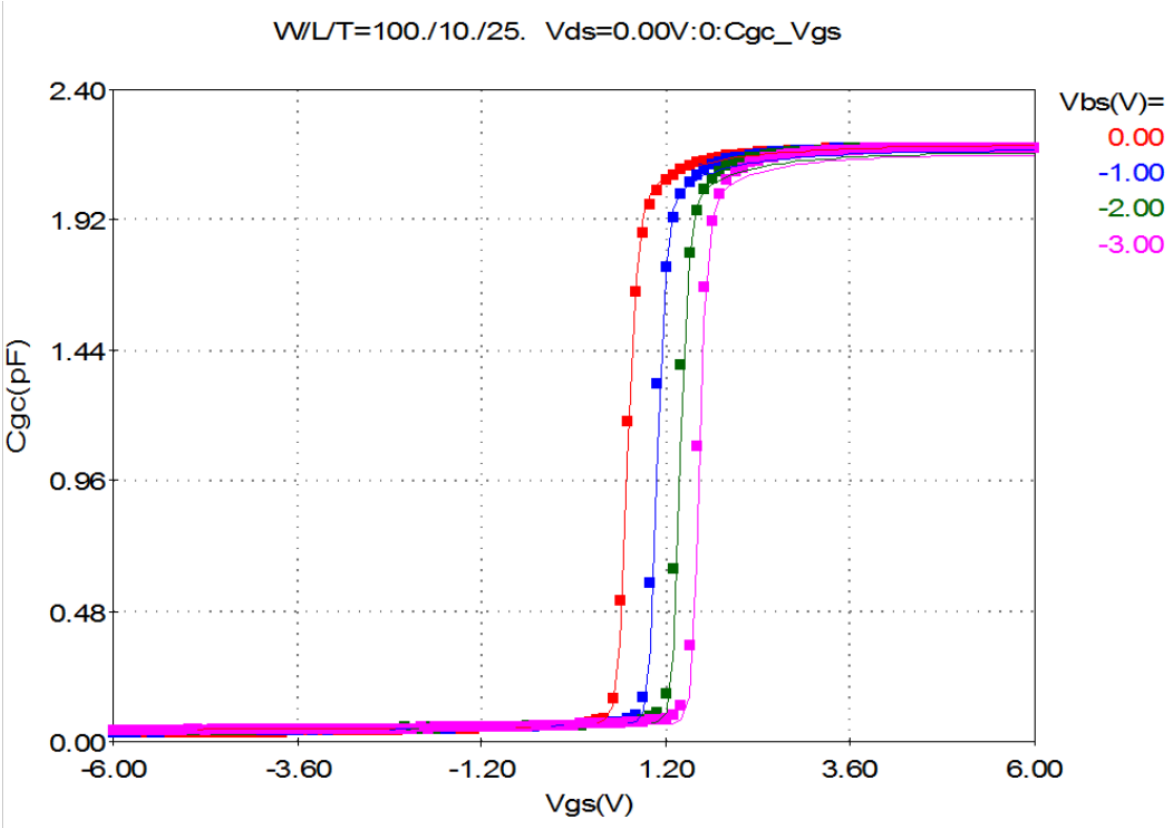

8.1.3.2 IV - Characteristics

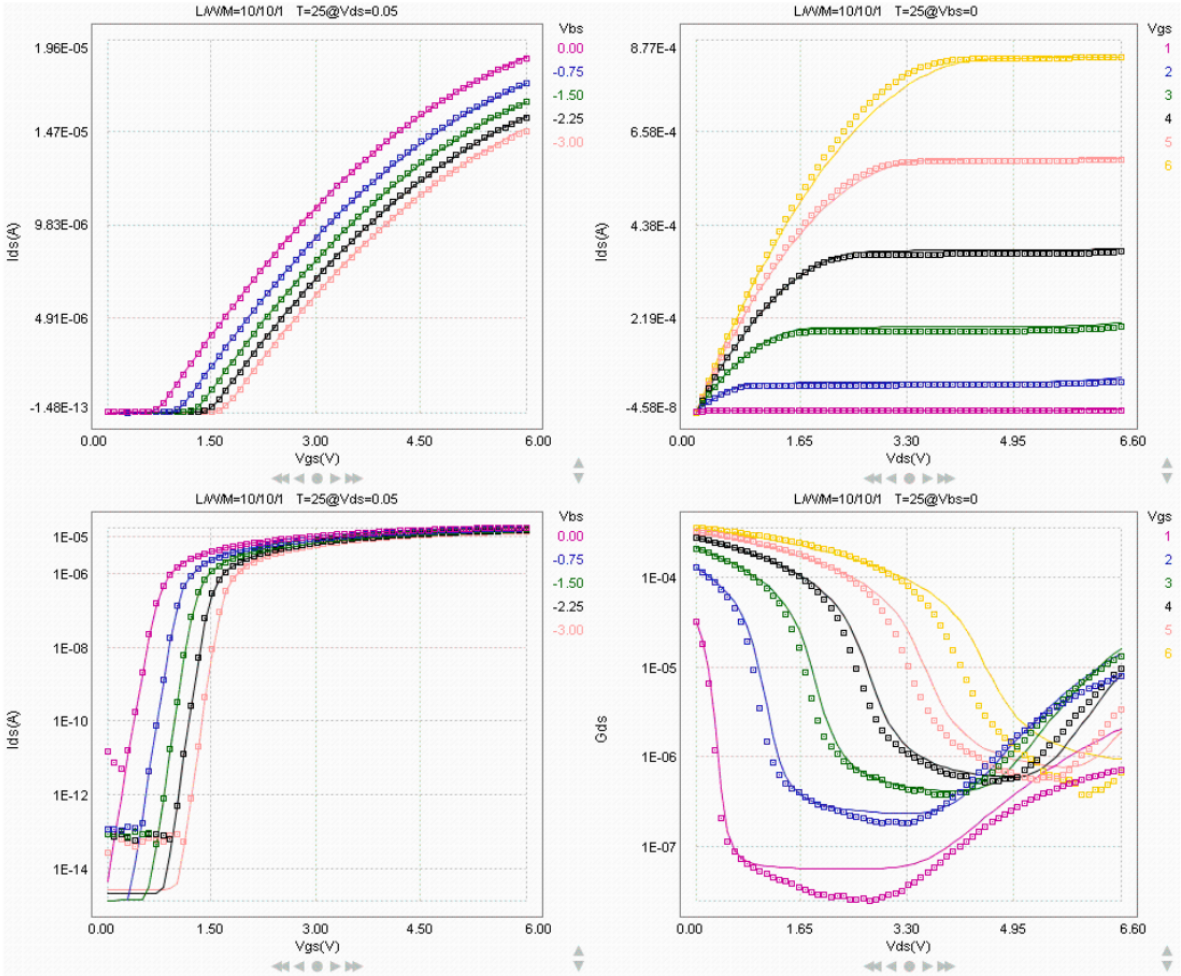

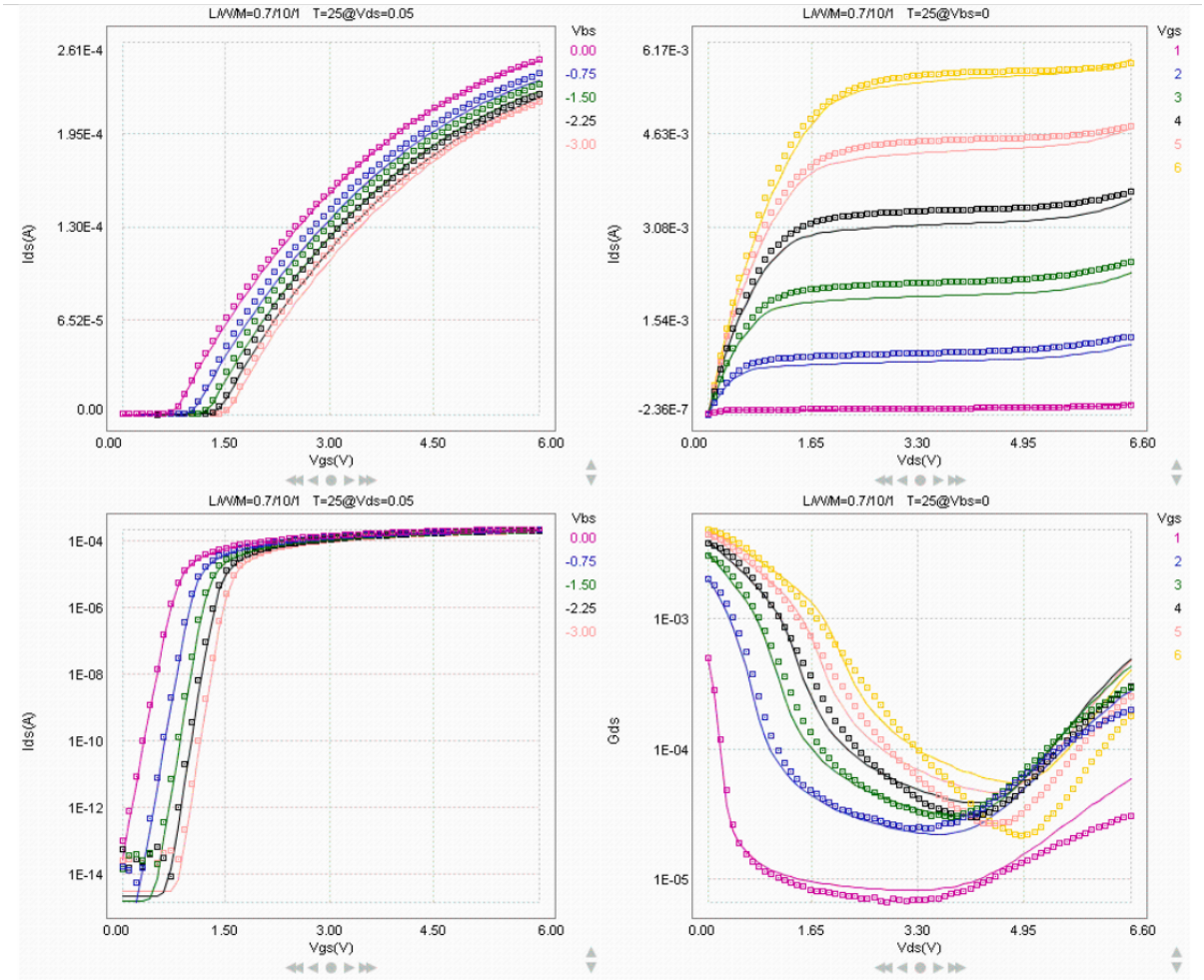
L/W/M=0.7/10/1 T=25@Vds=0.05
Vbs
0.00
-0.75
-1.50
-2.25
-3.00
Ids(A)
2.61E-4
1.95E-4
1.30E-4
6.52E-5
0.00
0.00
1.50
3.00
4.50
6.00
Vgs(V)
L/W/M=0.7/10/1 T=25@Vbs=0
Vgs
1
2
3
4
5
6
Ids(A)
6.17E-3
4.63E-3
3.08E-3
1.54E-3
-2.36E-7
0.00
1.65
3.30
4.95
6.60
Vds(V)
L/W/M=0.7/10/1 T=25@Vds=0.05
Vbs
0.00
-0.75
-1.50
-2.25
-3.00
Ids(A)
1E-04
1E-06
1E-08
1E-10
1E-12
1E-14
0.00
1.50
3.00
4.50
6.00
Vgs(V)
L/W/M=0.7/10/1 T=25@Vbs=0
Vgs
1
2
3
4
5
6
Gds
1E-03
1E-04
1E-05
0.00
1.65
3.30
4.95
6.60
Vds(V)

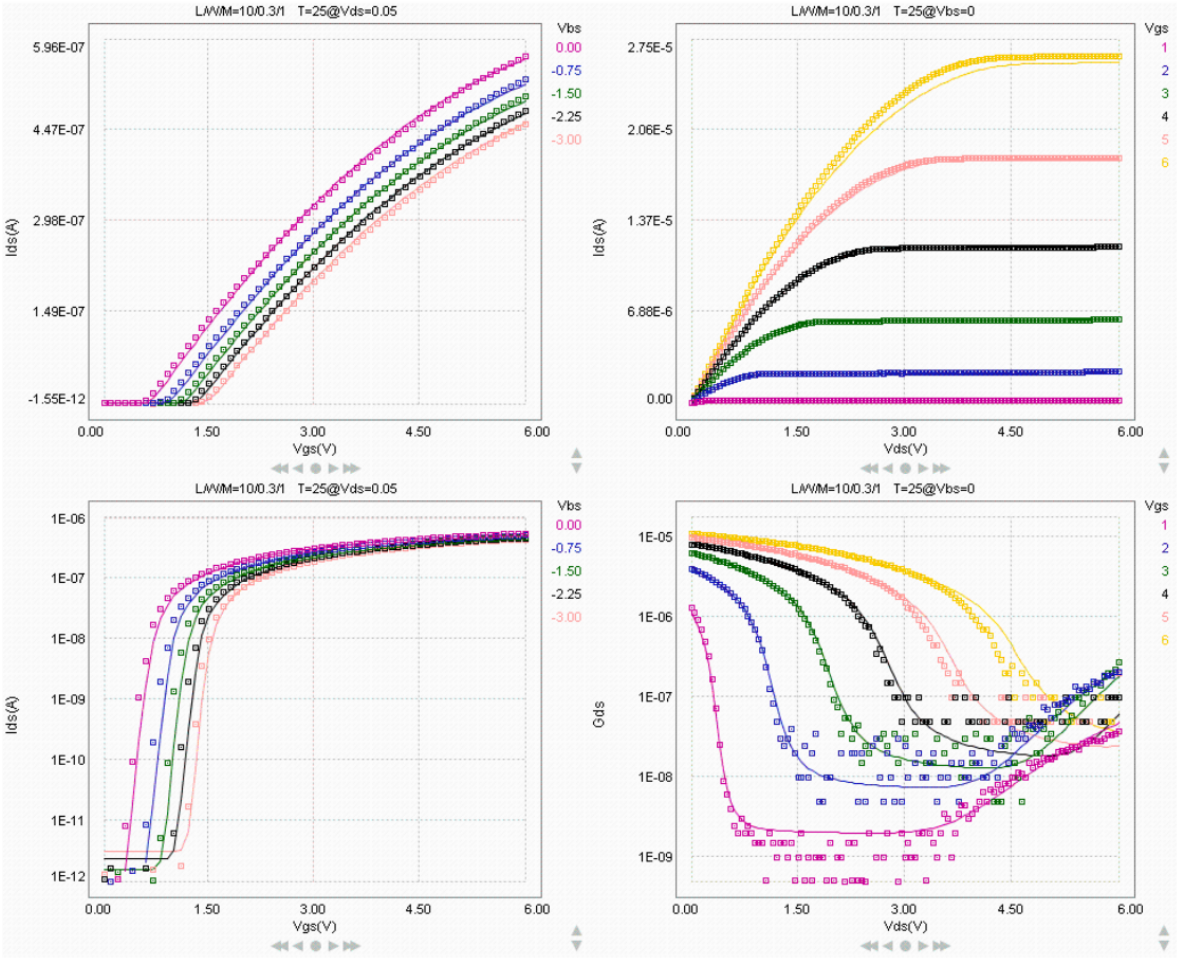
L/W/M=10/0.3/1 T=25@Vds=0.05
Vbs
0.00
-0.75
-1.50
-2.25
-3.00
Ids(A)
5.96E-07
4.47E-07
2.98E-07
1.49E-07
-1.55E-12
0.00
1.50
3.00
4.50
6.00
Vgs(V)
L/W/M=10/0.3/1 T=25@Vbs=0
Vgs
1
2
3
4
5
6
Ids(A)
2.75E-5
2.06E-5
1.37E-5
6.88E-6
0.00
Vds(V)
L/W/M=10/0.3/1 T=25@Vds=0.05
Vbs
0.00
-0.75
-1.50
-2.25
-3.00
Ids(A)
1E-06
1E-07
1E-08
1E-09
1E-10
1E-11
1E-12
Vgs(V)
L/W/M=10/0.3/1 T=25@Vbs=0
Vgs
1
2
3
4
5
6
Gds
1E-05
1E-06
1E-07
1E-08
1E-09
Vds(V)

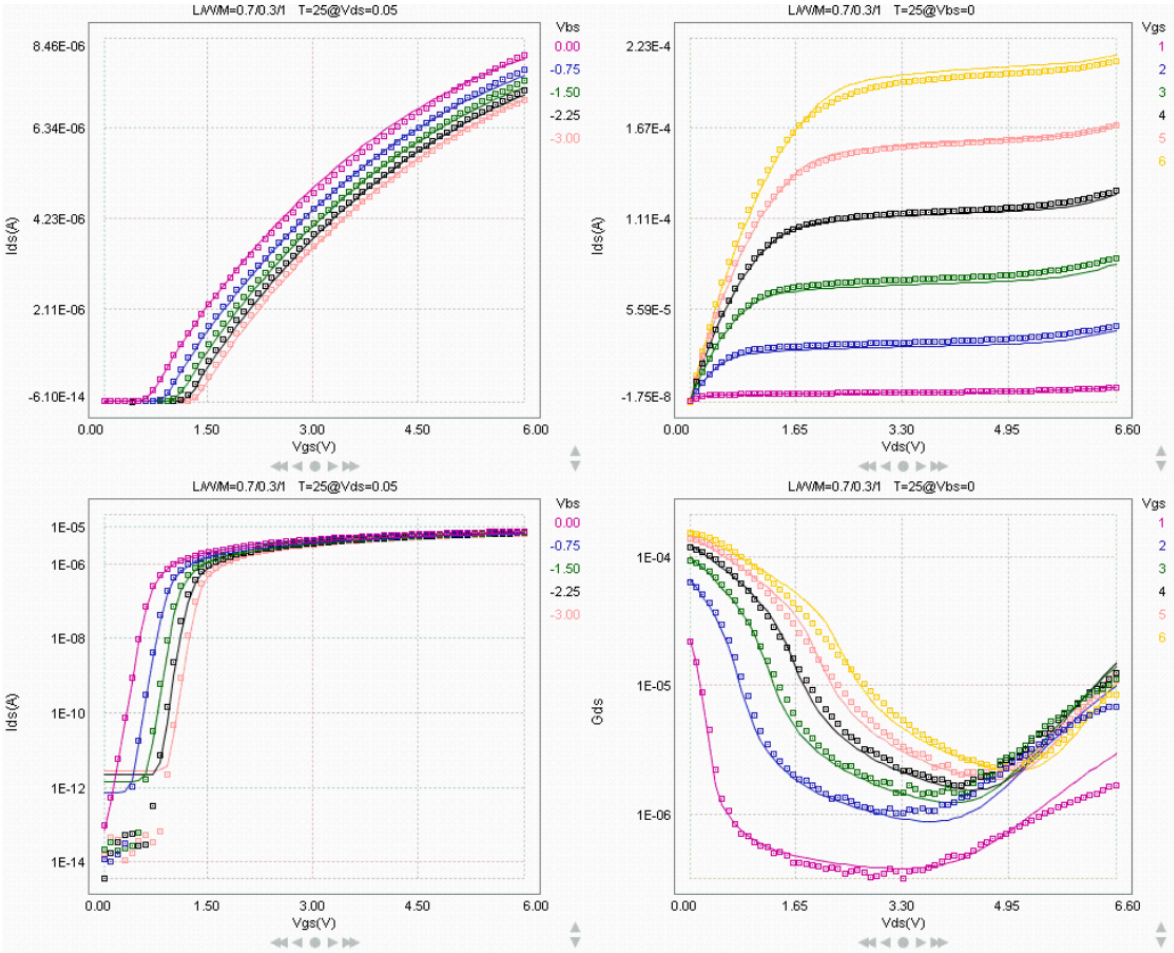
L/W/M=0.7/0.3/1 T=25@Vds=0.05
Vbs
0.00
-0.75
-1.50
-2.25
-3.00
Ids(A)
8.46E-06
6.34E-06
4.23E-06
2.11E-06
-6.10E-14
0.00
1.50
3.00
4.50
6.00
Vgs(V)
L/W/M=0.7/0.3/1 T=25@Vbs=0
Vgs
1
2
3
4
5
6
Ids(A)
2.23E-4
1.67E-4
1.11E-4
5.59E-5
-1.75E-8
0.00
1.65
3.30
4.95
6.60
Vds(V)
L/W/M=0.7/0.3/1 T=25@Vds=0.05
Vbs
0.00
-0.75
-1.50
-2.25
-3.00
Ids(A)
1E-05
1E-06
1E-08
1E-10
1E-12
1E-14
0.00
1.50
3.00
4.50
6.00
Vgs(V)
L/W/M=0.7/0.3/1 T=25@Vbs=0
Vgs
1
2
3
4
5
6
Gds
1E-04
1E-05
1E-06
0.00
1.65
3.30
4.95
6.60
Vds(V)

8.1.3.3 I/f Noise - Characteristics

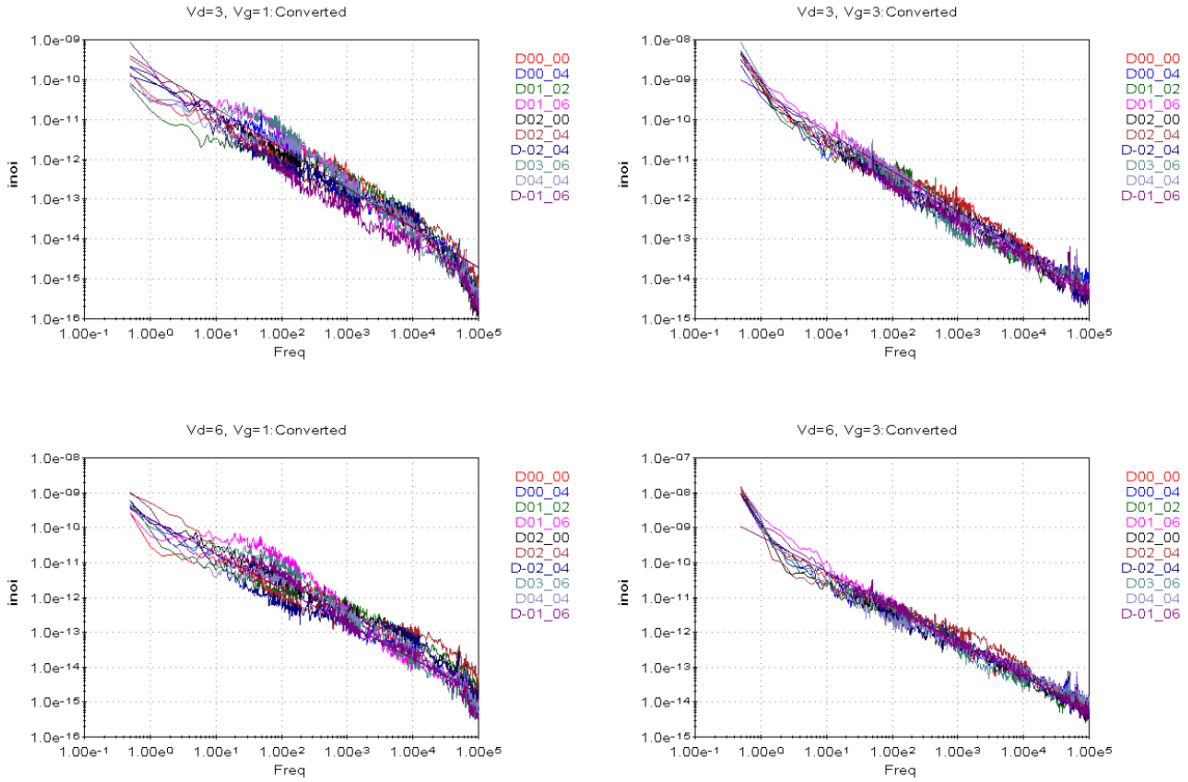

8.1.4 pfet_06v0 (6.0V)

8.1.4.1 CV - Characteristics

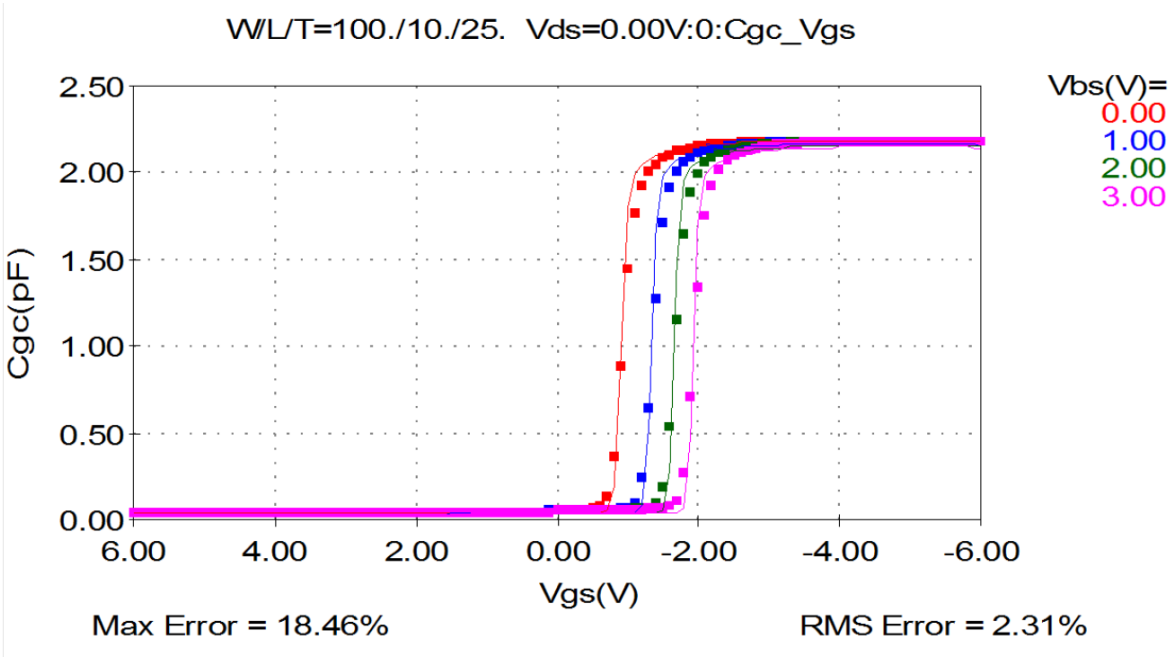

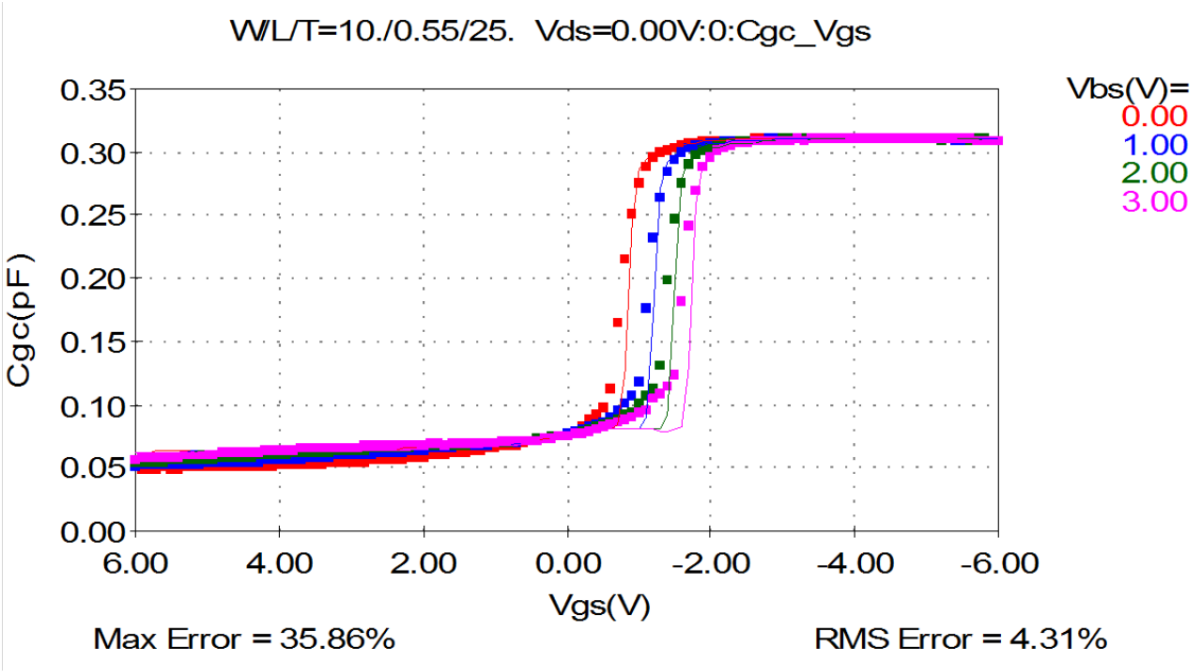

8.1.4.2 IV - Characteristics

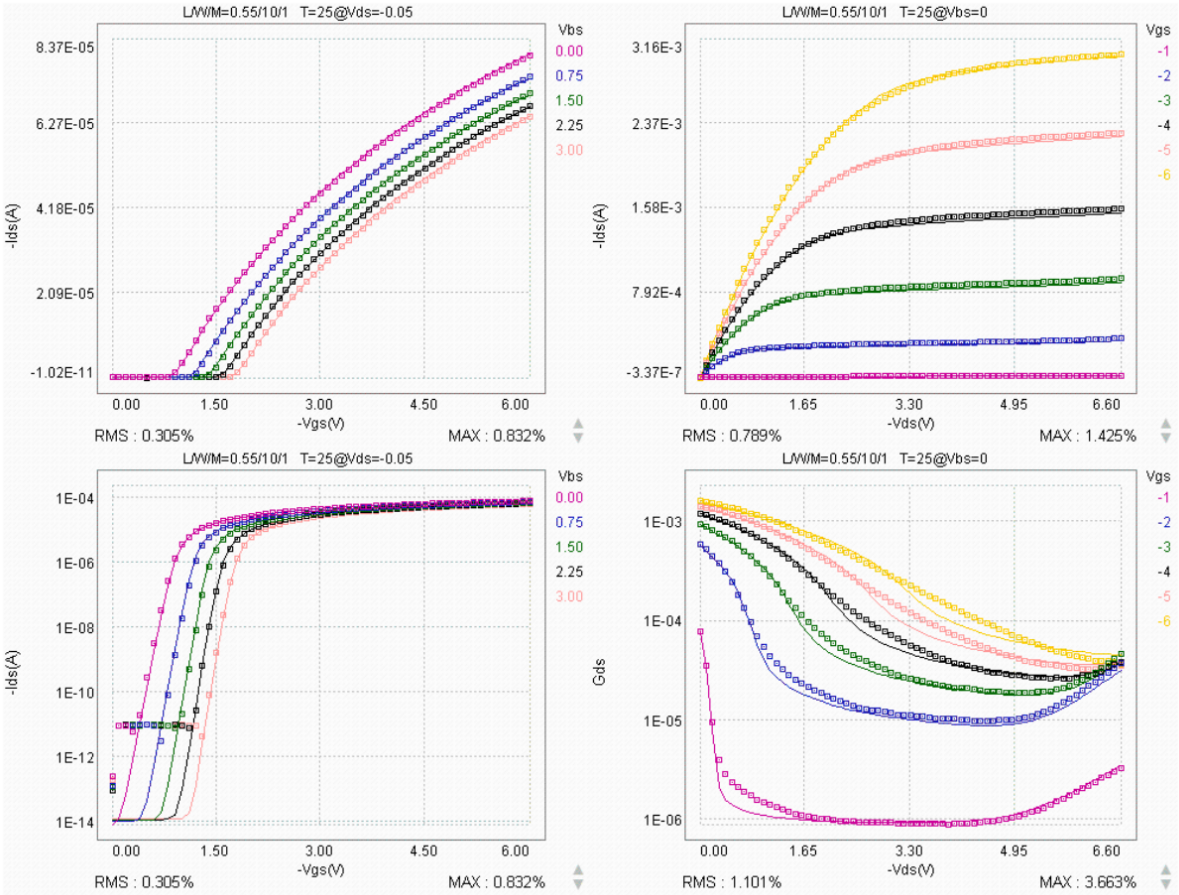

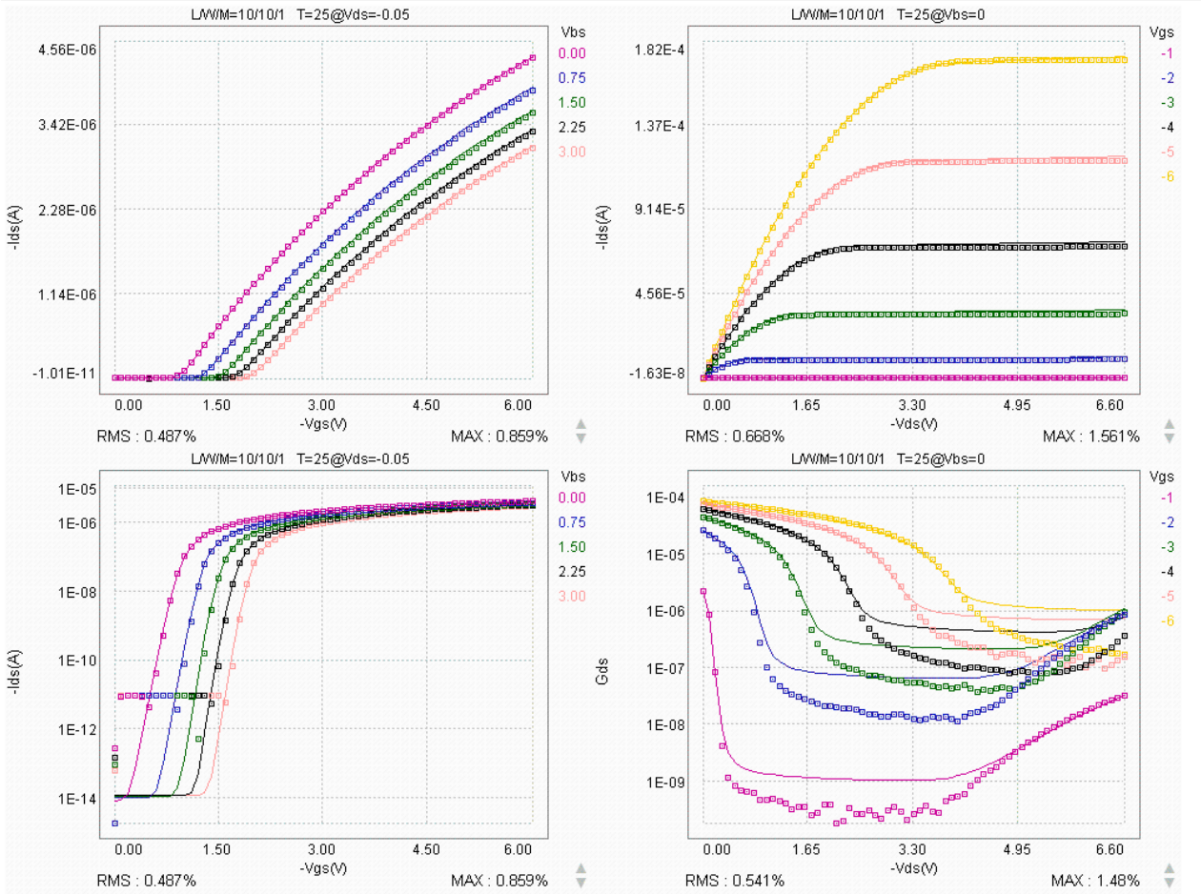
L/W/M=10/10/1 T=25@Vds=-0.05
-Ids(A)
-Vgs(V)
Vbs
0.00
0.75
1.50
2.25
3.00
RMS : 0.487%
MAX : 0.859%
L/W/M=10/10/1 T=25@Vbs=0
-Ids(A)
-Vds(V)
Vgs
-1
-2
-3
-4
-5
-6
RMS : 0.668%
MAX : 1.561%
L/W/M=10/10/1 T=25@Vds=-0.05
-Ids(A)
-Vgs(V)
Vbs
0.00
0.75
1.50
2.25
3.00
RMS : 0.487%
MAX : 0.859%
L/W/M=10/10/1 T=25@Vbs=0
Gds
-Vds(V)
Vgs
-1
-2
-3
-4
-5
-6
RMS : 0.541%
MAX : 1.48%

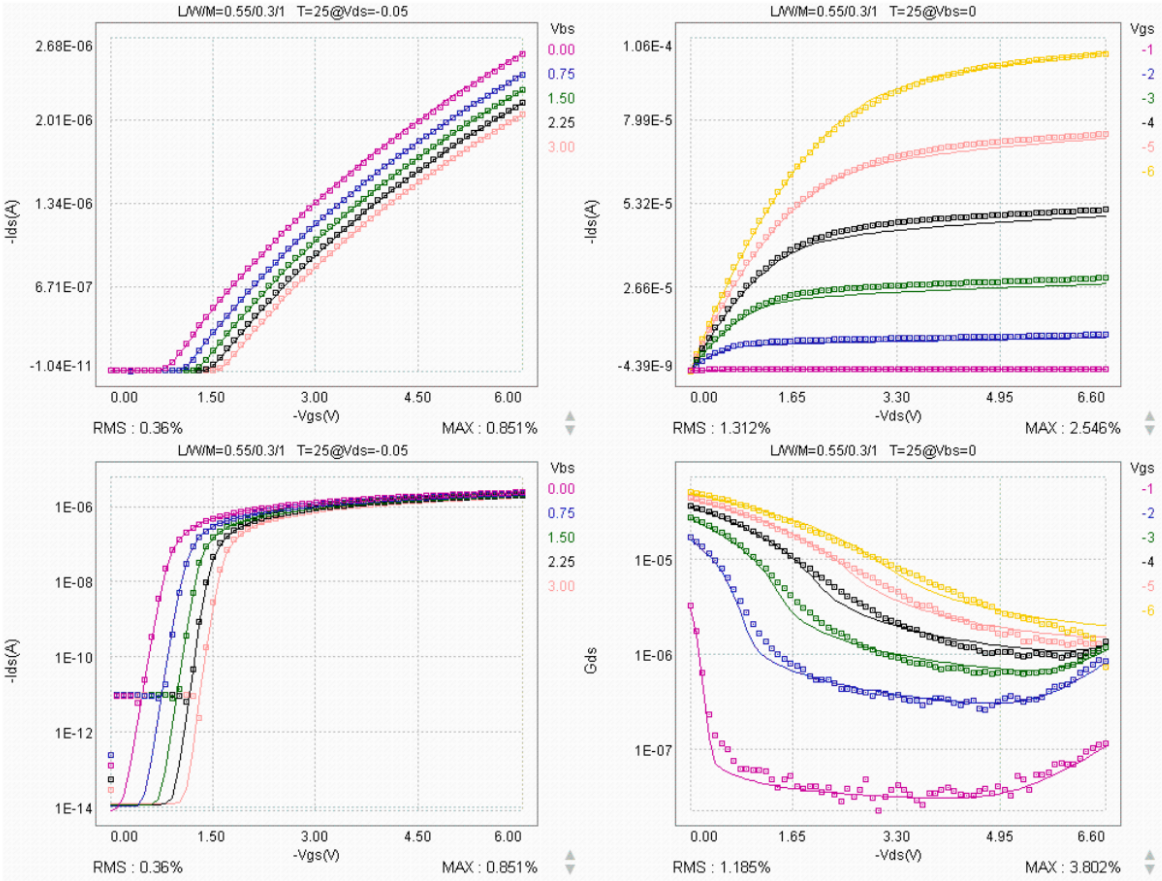
L/W/M=0.55/0.3/1 T=25@Vds=-0.05
Vbs
0.00
0.75
1.50
2.25
3.00
-Ids(A)
2.68E-06
2.01E-06
1.34E-06
6.71E-07
-1.04E-11
0.00
1.50
3.00
4.50
6.00
-Vgs(V)
RMS : 0.36%
MAX : 0.851%
L/W/M=0.55/0.3/1 T=25@Vbs=0
Vgs
-1
-2
-3
-4
-5
-6
-Ids(A)
1.06E-4
7.99E-5
5.32E-5
2.66E-5
-4.39E-9
0.00
1.65
3.30
4.95
6.60
-Vds(V)
RMS : 1.312%
MAX : 2.546%
L/W/M=0.55/0.3/1 T=25@Vds=-0.05
Vbs
0.00
0.75
1.50
2.25
3.00
-Ids(A)
1E-06
1E-08
1E-10
1E-12
1E-14
0.00
1.50
3.00
4.50
6.00
-Vgs(V)
RMS : 0.36%
MAX : 0.851%
L/W/M=0.55/0.3/1 T=25@Vbs=0
Vgs
-1
-2
-3
-4
-5
-6
Gds
1E-05
1E-06
1E-07
0.00
1.65
3.30
4.95
6.60
-Vds(V)
RMS : 1.185%
MAX : 3.802%

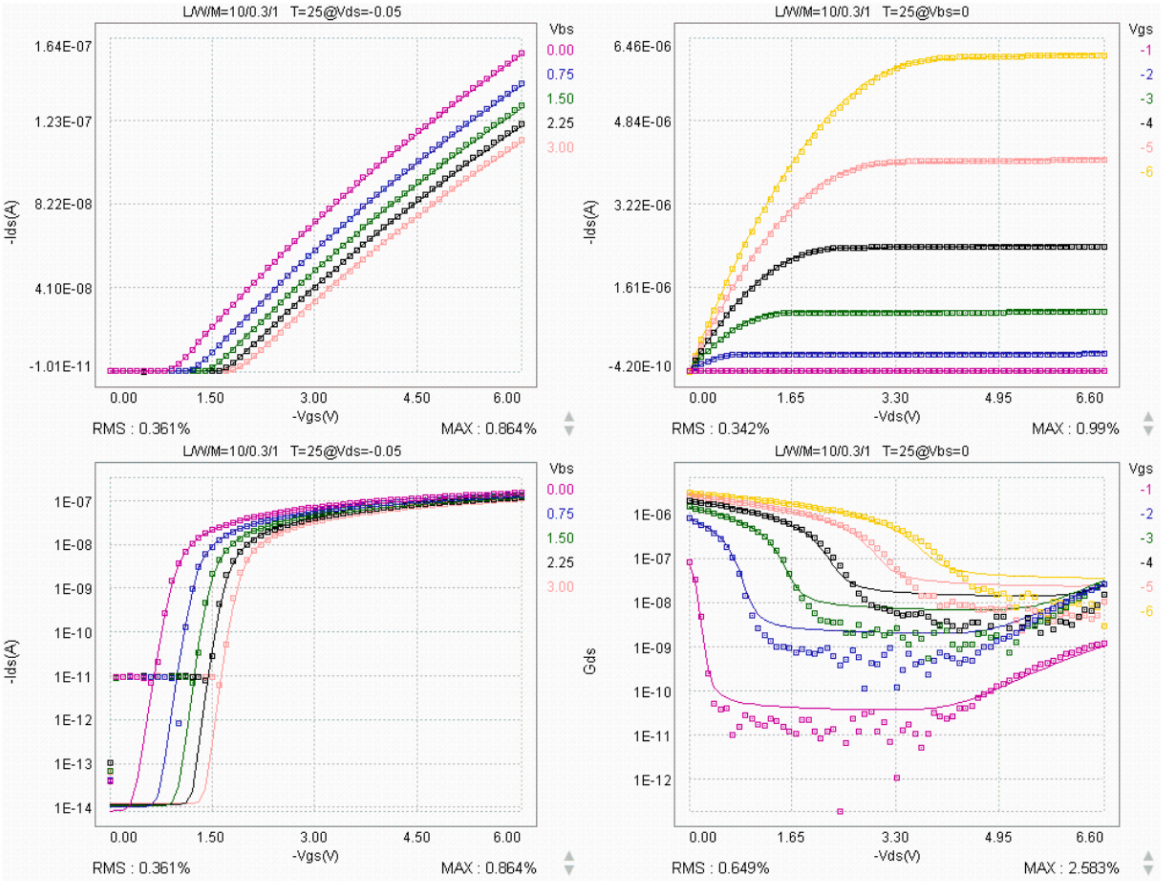
L/W/M=10/0.3/1 T=25@Vds=-0.05
Vbs
0.00
0.75
1.50
2.25
3.00
-Ids(A)
1.64E-07
1.23E-07
8.22E-08
4.10E-08
-1.01E-11
0.00
1.50
3.00
4.50
6.00
-Vgs(V)
RMS : 0.361%
MAX : 0.864%
L/W/M=10/0.3/1 T=25@Vbs=0
Vgs
-1
-2
-3
-4
-5
-6
-Ids(A)
6.46E-06
4.84E-06
3.22E-06
1.61E-06
-4.20E-10
0.00
1.65
3.30
4.95
6.60
-Vds(V)
RMS : 0.342%
MAX : 0.99%
L/W/M=10/0.3/1 T=25@Vds=-0.05
Vbs
0.00
0.75
1.50
2.25
3.00
-Ids(A)
1E-07
1E-08
1E-09
1E-10
1E-11
1E-12
1E-13
1E-14
0.00
1.50
3.00
4.50
6.00
-Vgs(V)
RMS : 0.361%
MAX : 0.864%
L/W/M=10/0.3/1 T=25@Vbs=0
Vgs
-1
-2
-3
-4
-5
-6
Gds
1E-06
1E-07
1E-08
1E-09
1E-10
1E-11
1E-12
0.00
1.65
3.30
4.95
6.60
-Vds(V)
RMS : 0.649%
MAX : 2.583%

8.1.4.3 I/f Noise - Characteristics

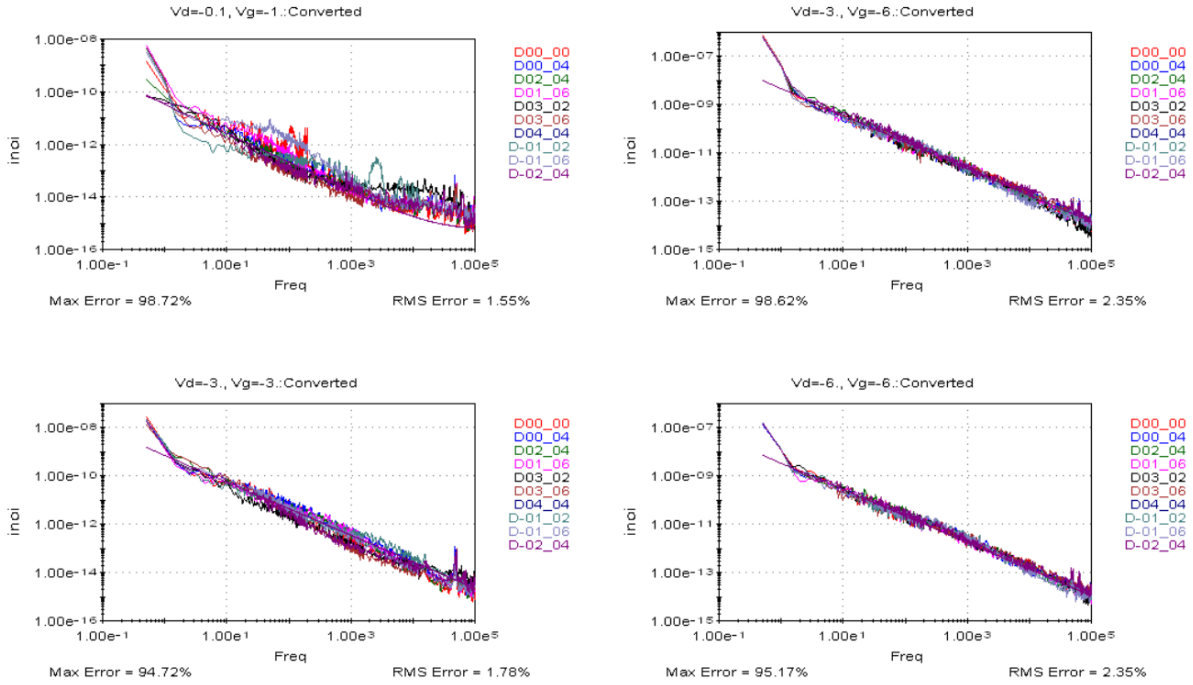

8.1.5 nfet_06v0_nvt (6.0V)

8.1.5.1 IV - Characteristics

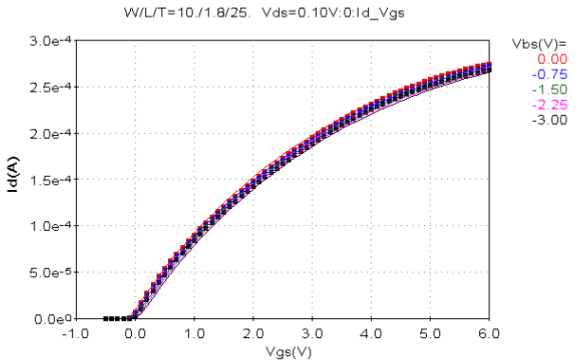

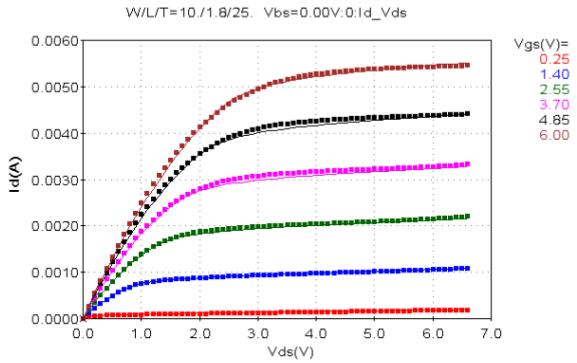

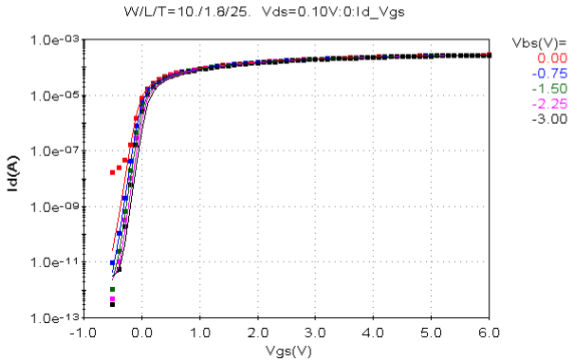

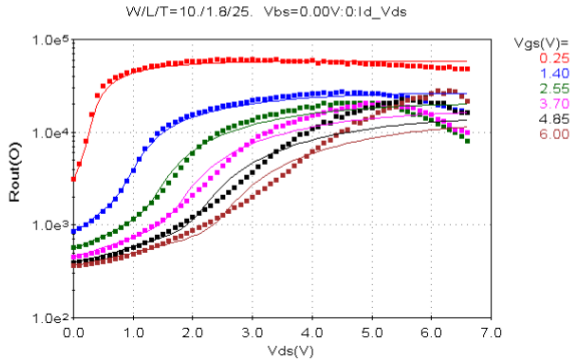

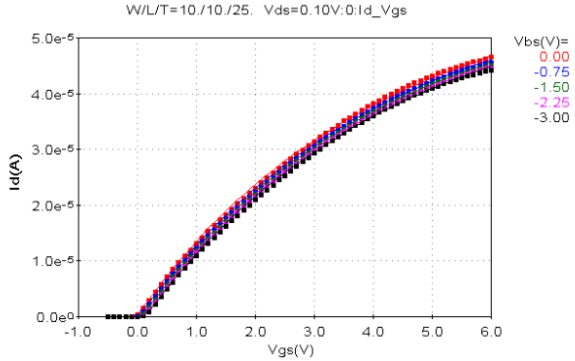

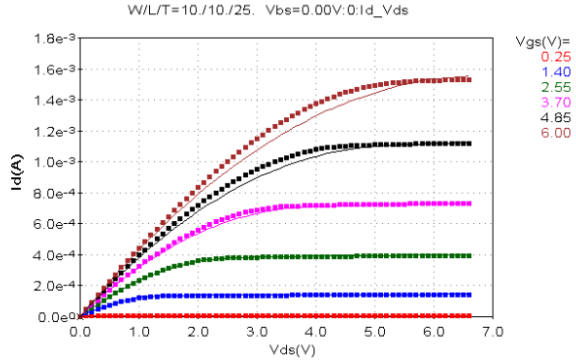

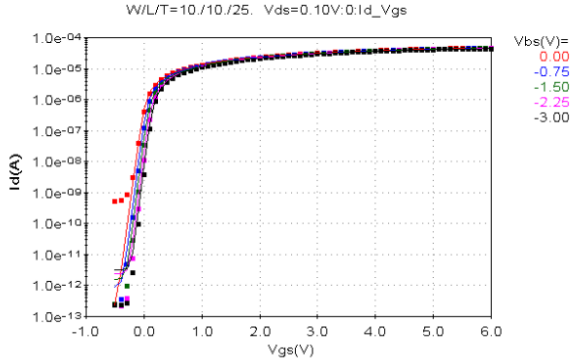

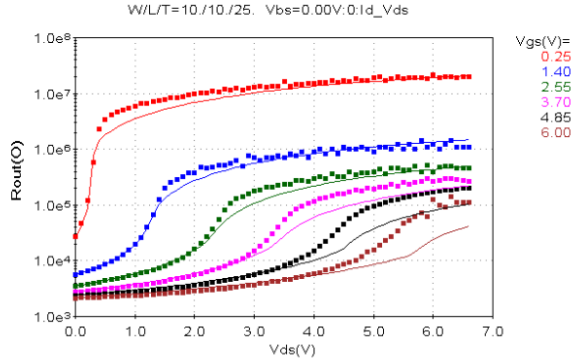

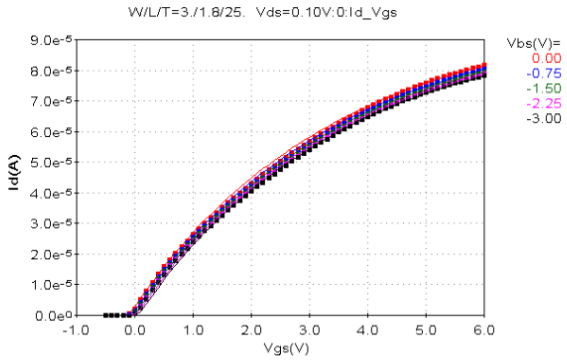
W/L/T=3./1.8/25. Vds=0.10V:0:Id_Vgs
Id(A)
Vgs(V)
Vbs(V)=
0.00
-0.75
-1.50
-2.25
-3.00

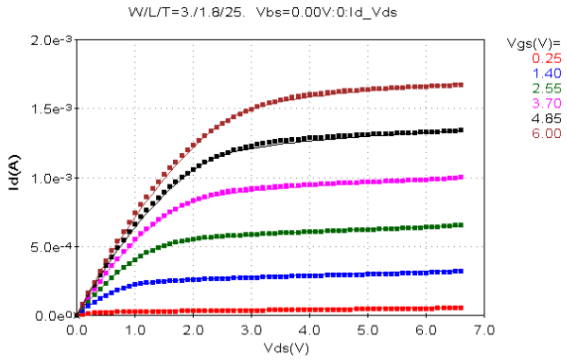
W/L/T=3./1.8/25. Vbs=0.00V:0:Id_Vds
Id(A)
Vds(V)
Vgs(V)=
0.25
1.40
2.55
3.70
4.85
6.00

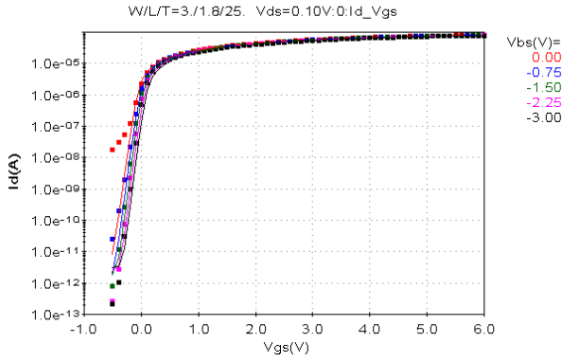
W/L/T=3./1.8/25. Vds=0.10V:0:Id_Vgs
Id(A)
Vgs(V)
Vbs(V)=
0.00
-0.75
-1.50
-2.25
-3.00

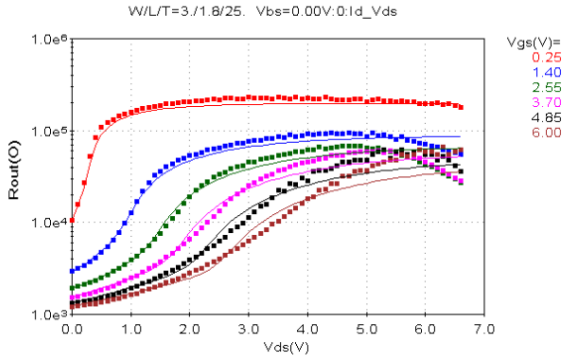
W/L/T=3./1.8/25. Vbs=0.00V:0:Id_Vds
Rout(O)
Vds(V)
Vgs(V)=
0.25
1.40
2.55
3.70
4.85
6.00

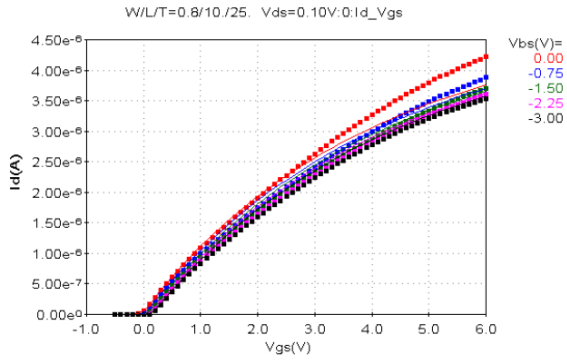
W/L/T=0.8/10./25. Vds=0.10V:0:Id_Vgs
Id(A)
Vgs(V)
Vbs(V)=
0.00
-0.75
-1.50
-2.25
-3.00

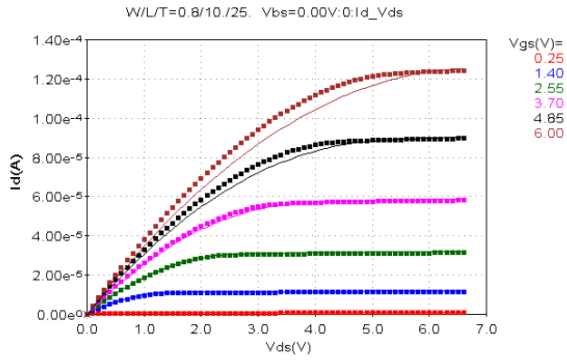
W/L/T=0.8/10./25. Vbs=0.00V:0:Id_Vds
Id(A)
Vds(V)
Vgs(V)=
0.25
1.40
2.55
3.70
4.85
6.00

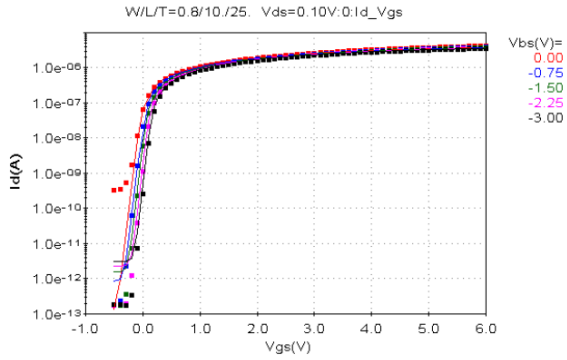
W/L/T=0.8/10./25. Vds=0.10V:0:Id_Vgs
Id(A)
Vgs(V)
Vbs(V)=
0.00
-0.75
-1.50
-2.25
-3.00

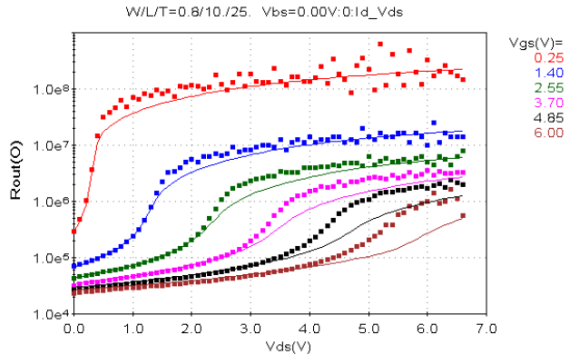
W/L/T=0.8/10./25. Vbs=0.00V:0:Id_Vds
Rout(O)
Vds(V)
Vgs(V)=
0.25
1.40
2.55
3.70
4.85
6.00

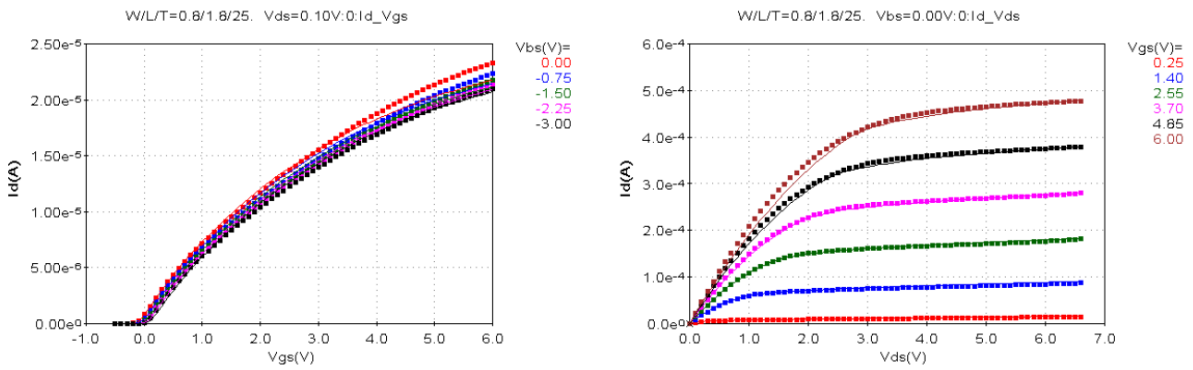

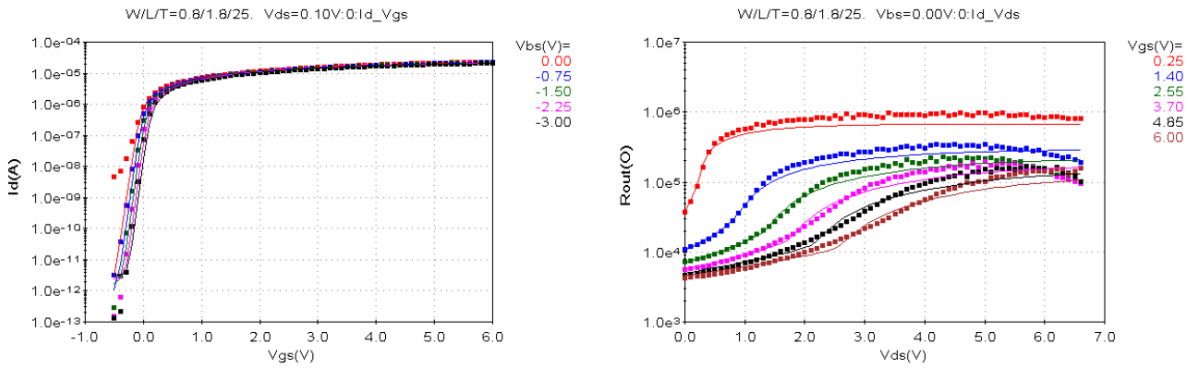

8.1.5.2 I/f Noise - Characteristics

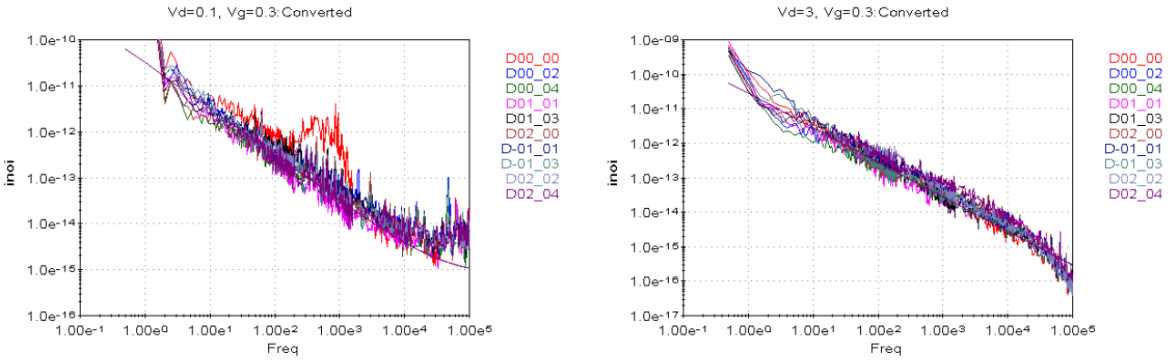

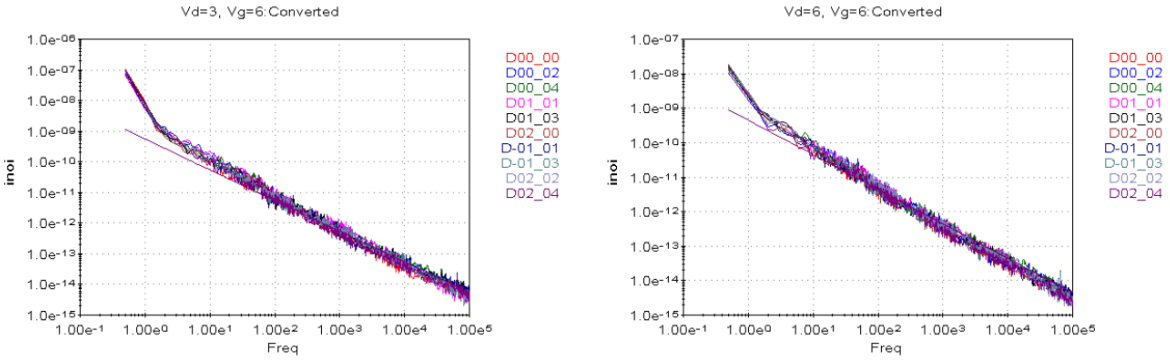

8.2 BJTs

8.2.1 Vertical PNP

8.2.1.1 VPNP-Emitter Size 10um x 10um

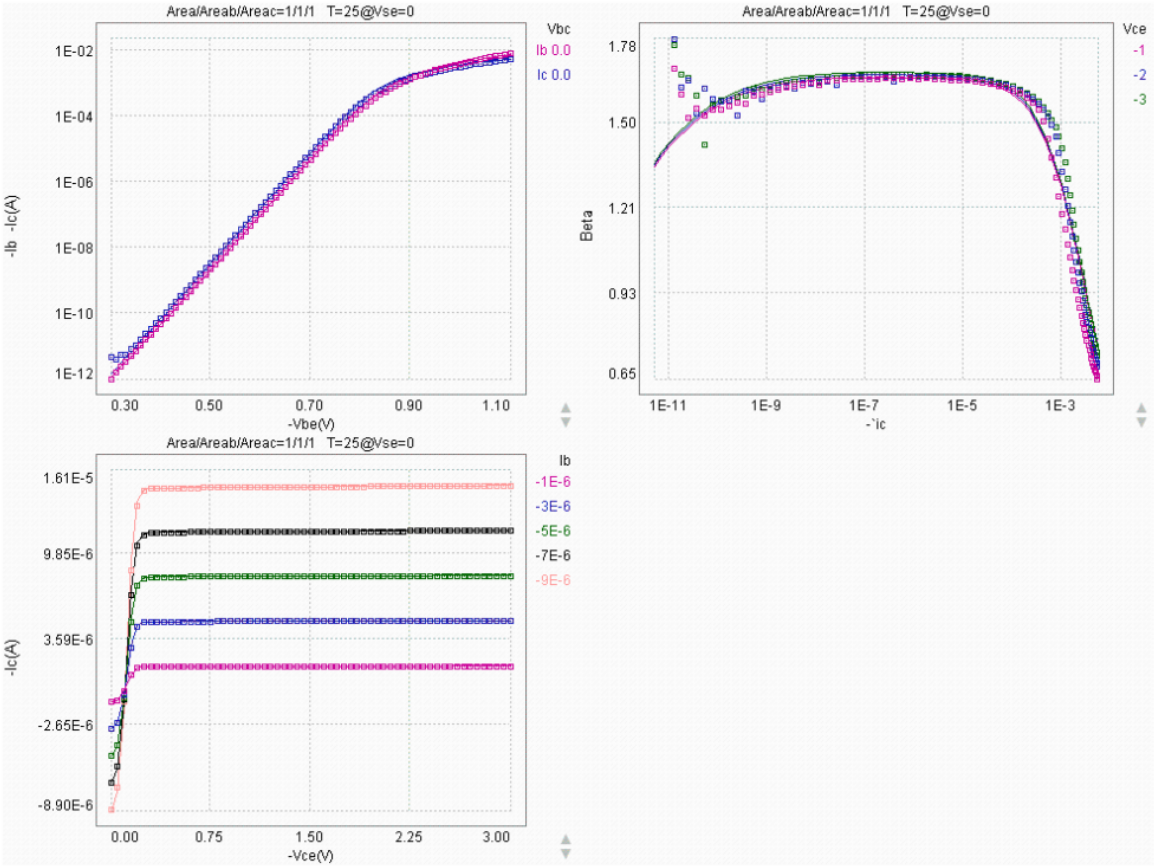

8.2.1.2 VPNP-Emitter Size 5um x 5um

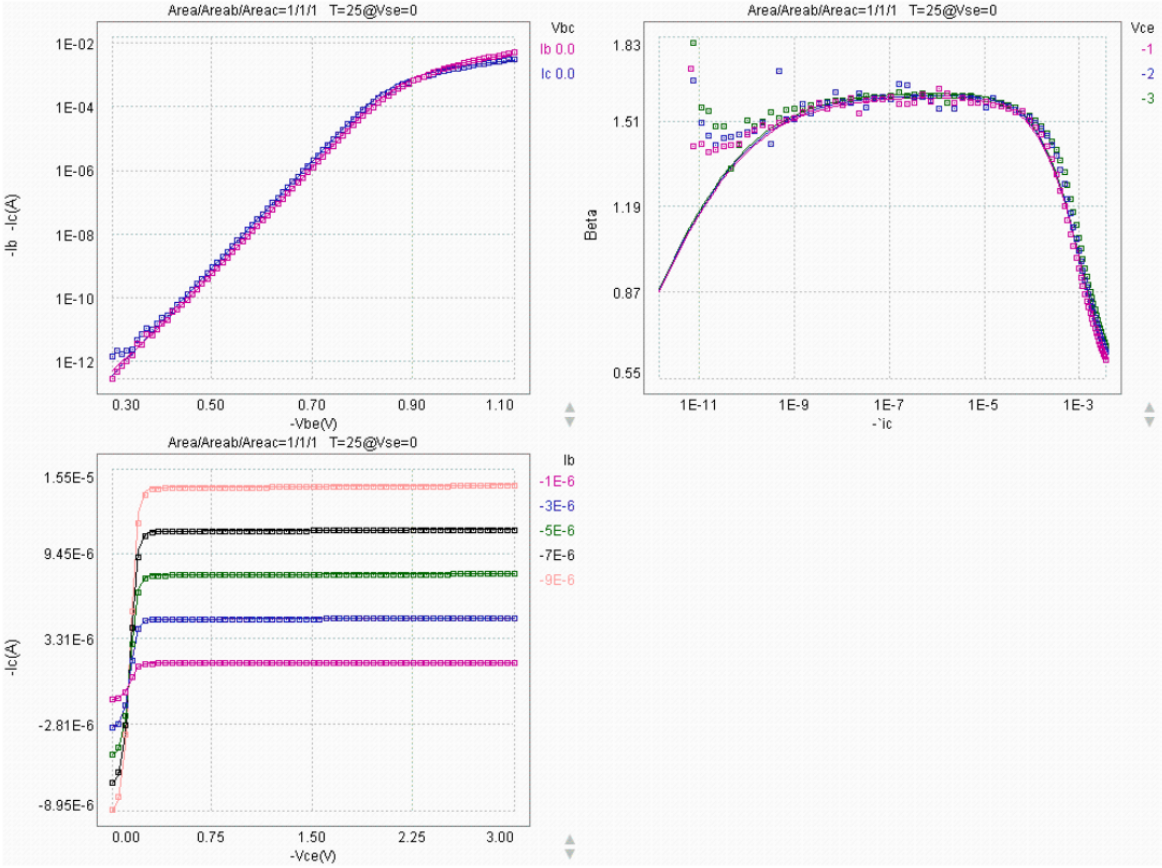

8.2.1.3 VPNP-Emitter Size 0.42um x 10um

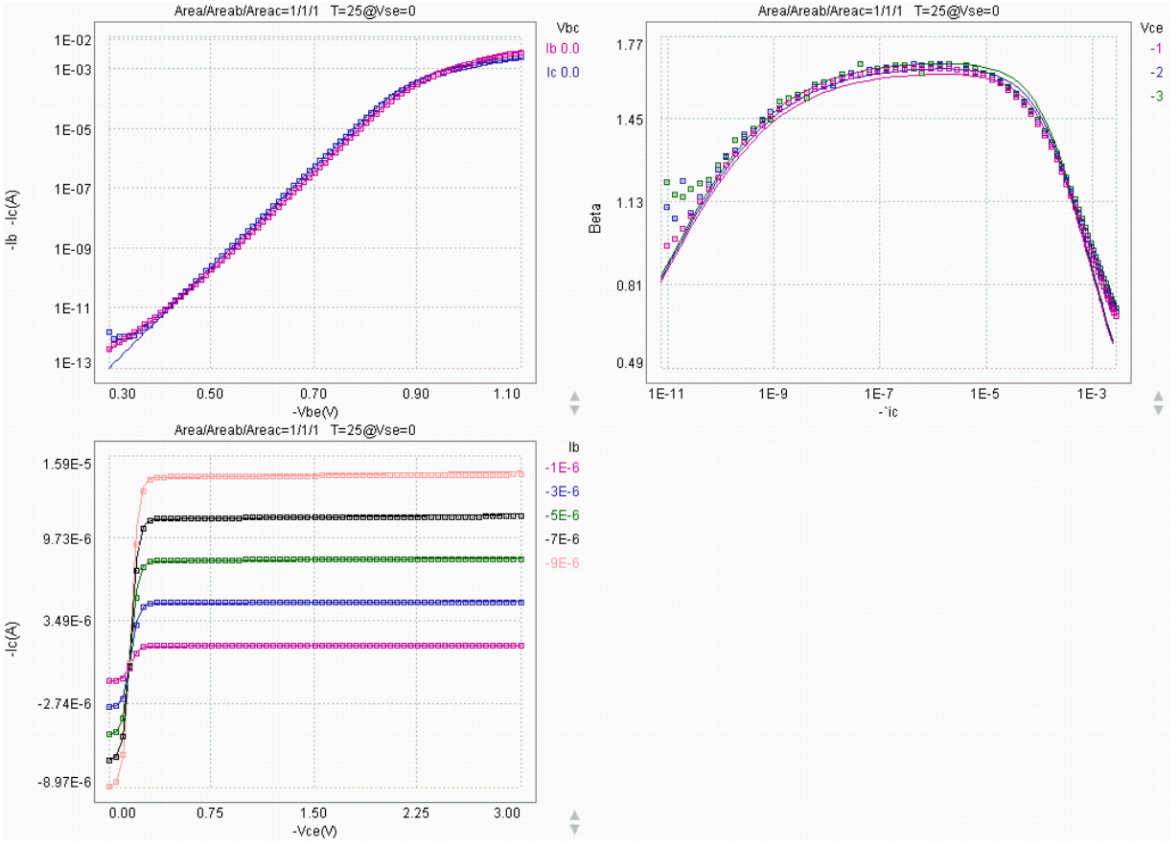

8.2.1.4 VPNP-Emitter Size 0.42um x 5um

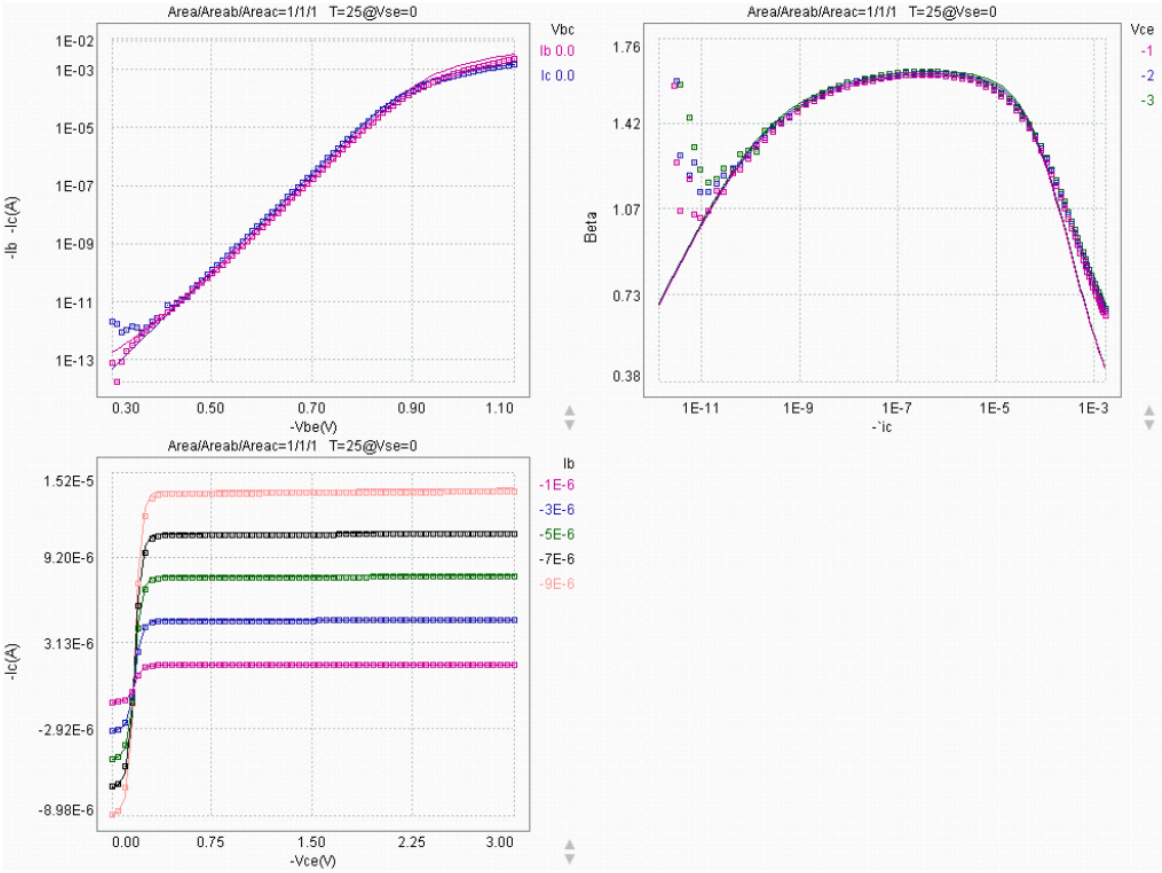

8.2.1.5 VNPN-Emitter Size 10um x 10um

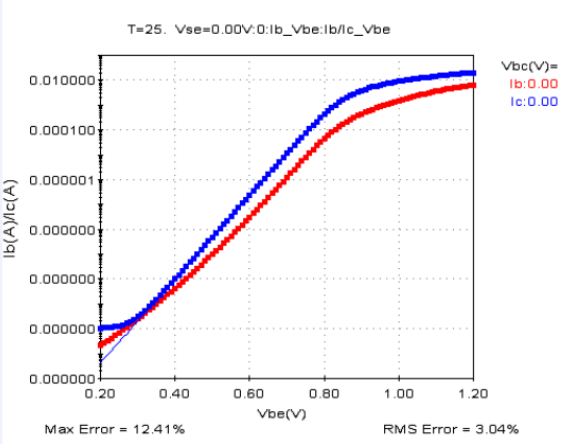

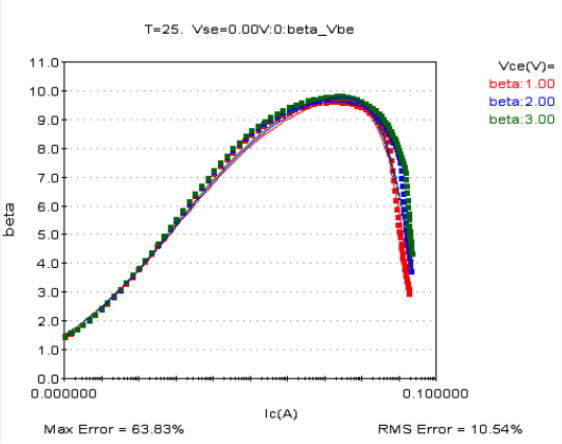

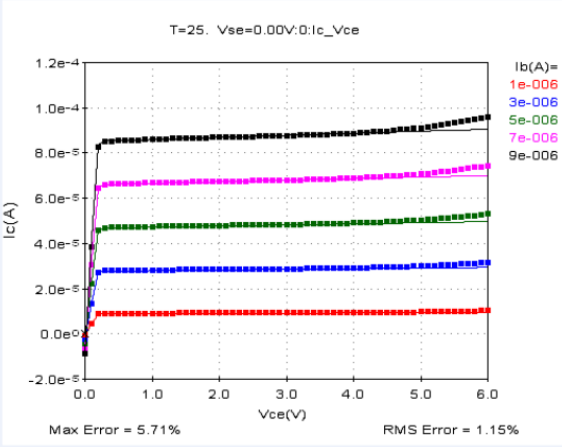

8.2.1.6 VNPN-Emitter Size 5um x 5um

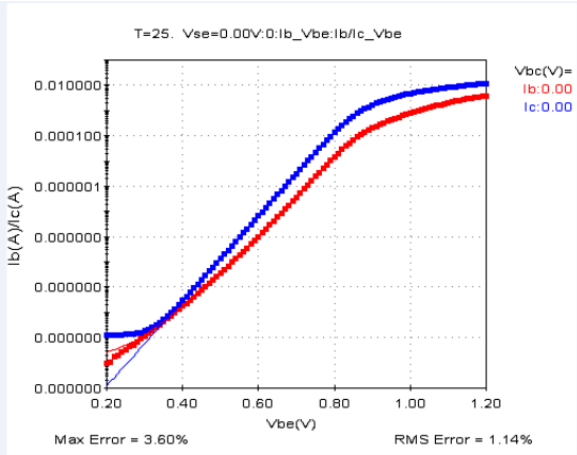

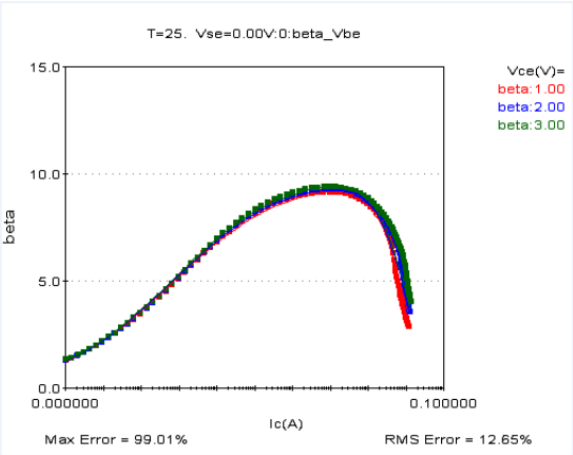

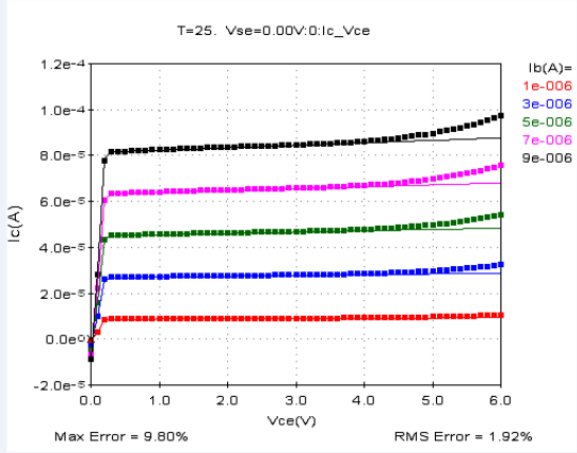

8.2.1.7 VNPN-Emitter Size 0.54um x 16um

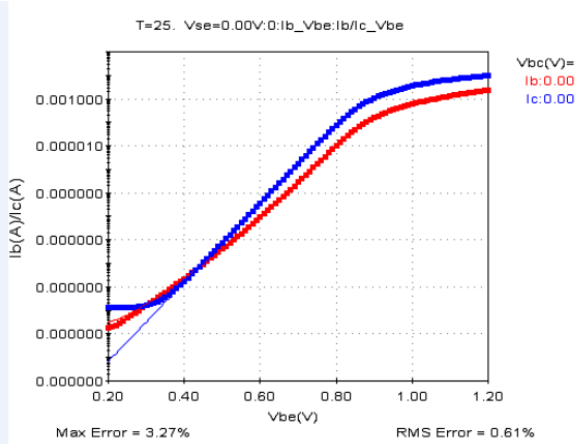

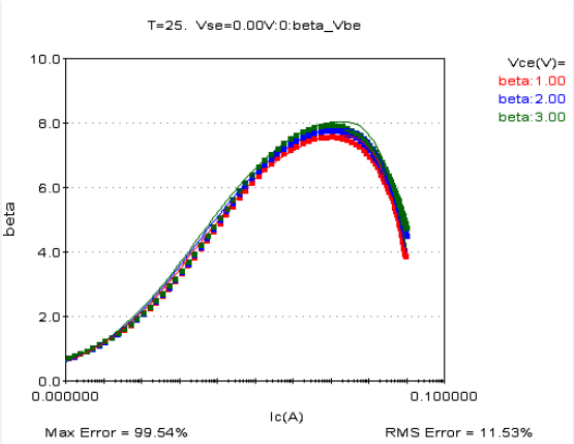

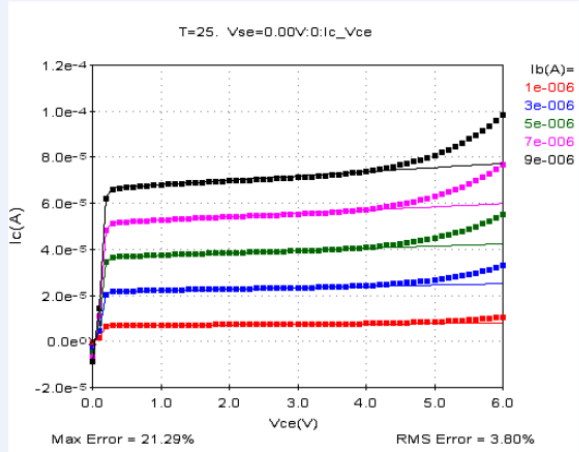

8.2.1.8 VNPN-Emitter Size 0.54um x 8um

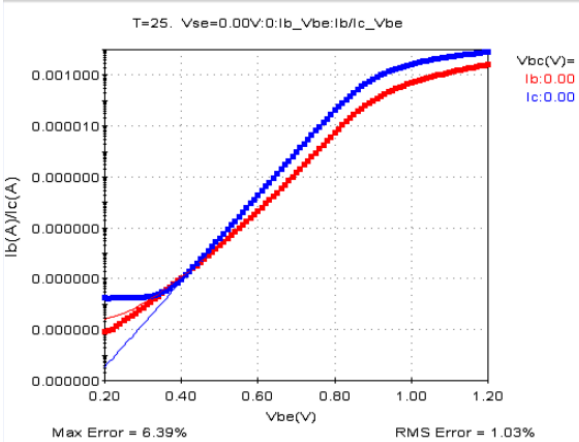

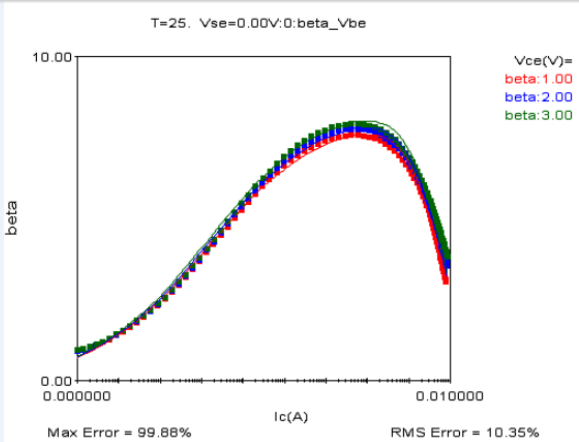

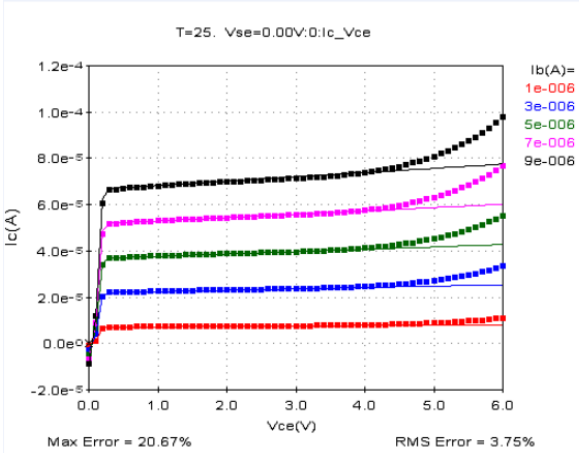

8.2.1.9 VNPN-Emitter Size 0.54um x 4um

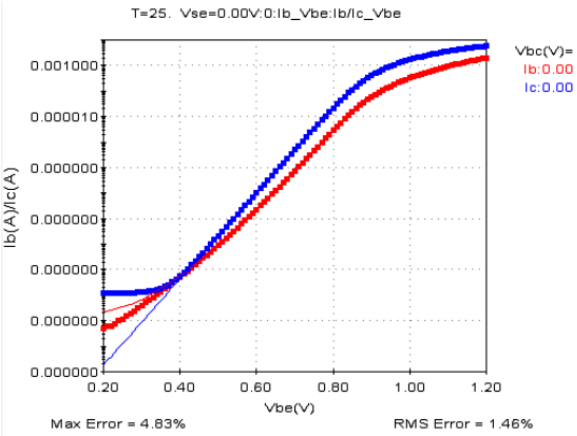

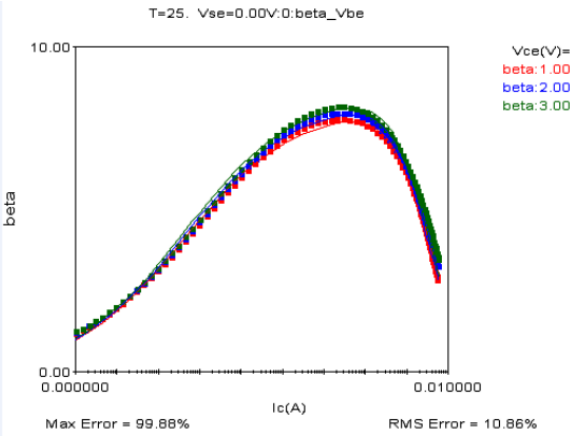

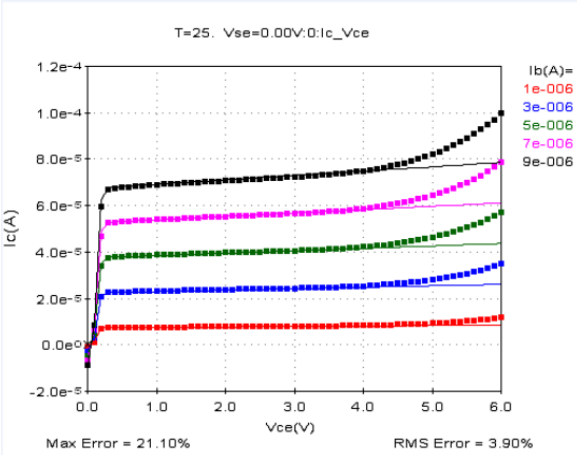

8.2.1.10 VNPN-Emitter Size 0.54um x 2um

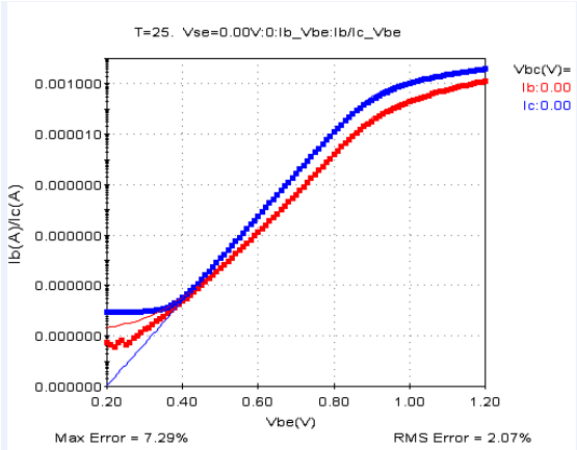

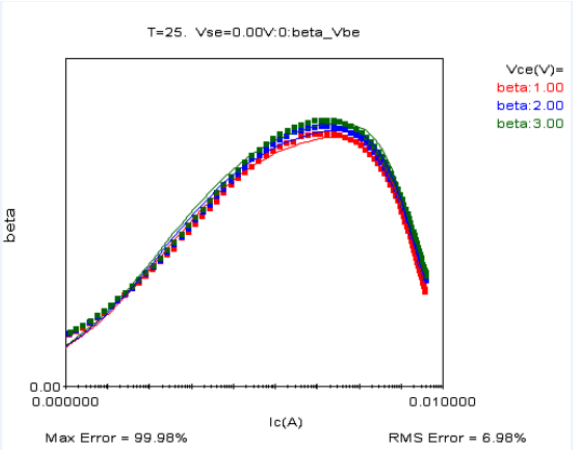

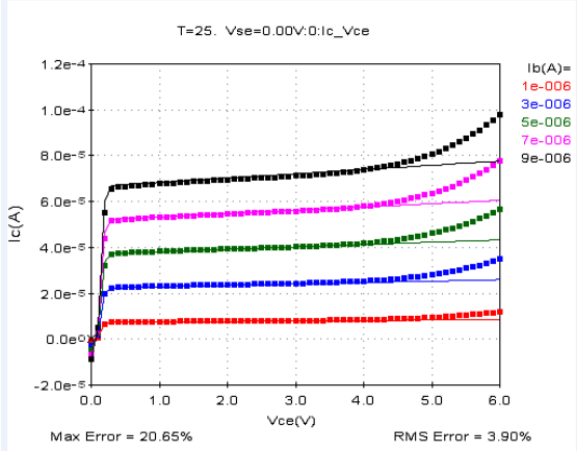

8.3 Diodes

8.3.1 Schottky Diode

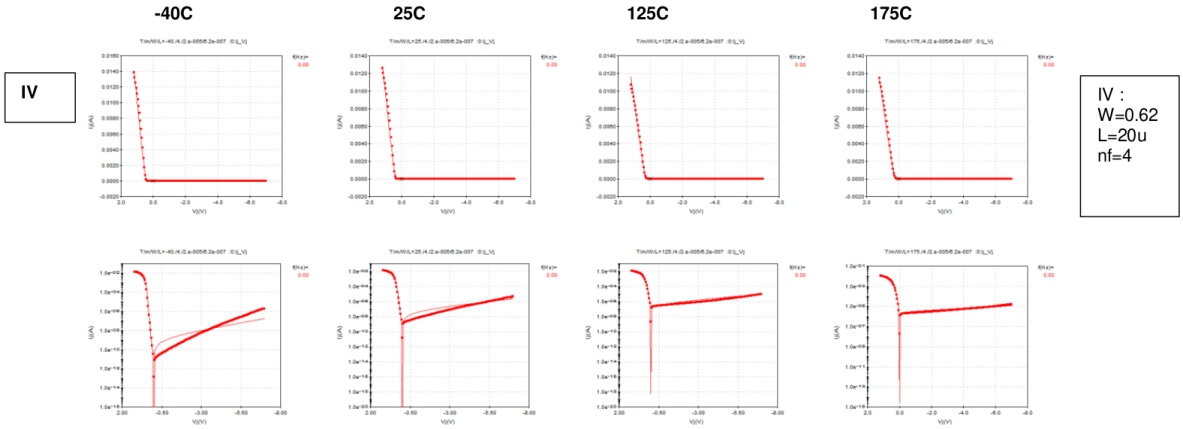

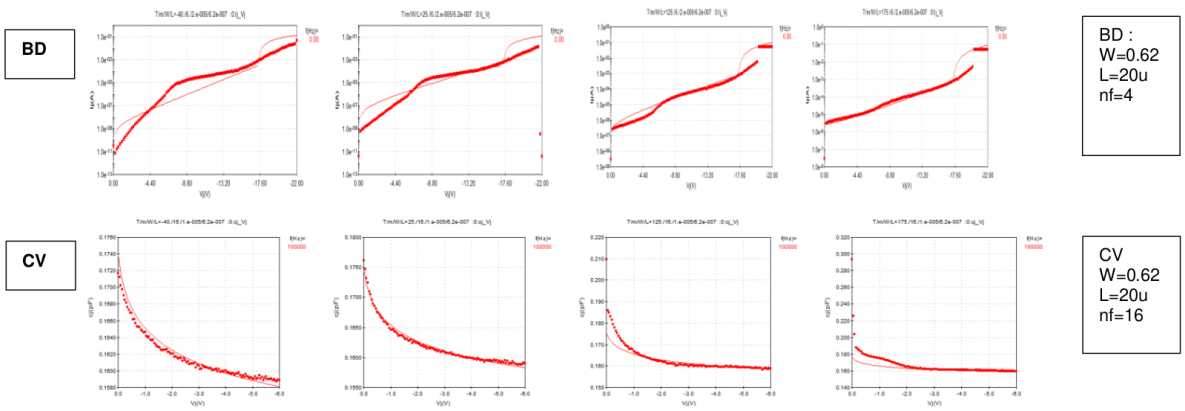

9.0 Statistical Model Reference guide

9.1 Introduction

Uncertainties are inherent in the fabrication of transistors. The same transistor design can show different performance when fabricated using different equipment, at different locations, or during different times. In order to capture these variations of performance, a statistical model is necessary.

The statistical models described here are based on the EP corner spec. Each MOSFET model is capable of generating global statistical variation.

9.2 Model Usage and Syntax

The general model syntax is described below.

To run Monte Carlo simulations, designers are required to include the following elements in their netlist.

9.2.1 Library invocation

To be added

9.2.2 Transistor declaration

To be added

9.2.3 Switch definitions

To be added

9.3 Statistical MOSFETs Modeling Results

To verify the model, Monte Carlo simulations were run and the output was compared with the measured data.

The verification plots below compare the NMOS data with the PMOS data. This plot captures 3 pieces of information: the variance of the NMOS data, the variance of the PMOS data, and the covariance of the NMOS data vs. the PMOS data.

The number of runs for each model type is 1000 runs. In normal usage though, such a large number of runs is not necessary. 100 to 200 runs would be a typical number. Certainly, for a large circuit, it may not be feasible to make a large number of Monte Carlo simulations. The following plots compare the measurement results and the simulation results. Results shown are for fet_mc_skew = 3.

9.3.1 3.3V NMOS and PMOS PROCESS MC

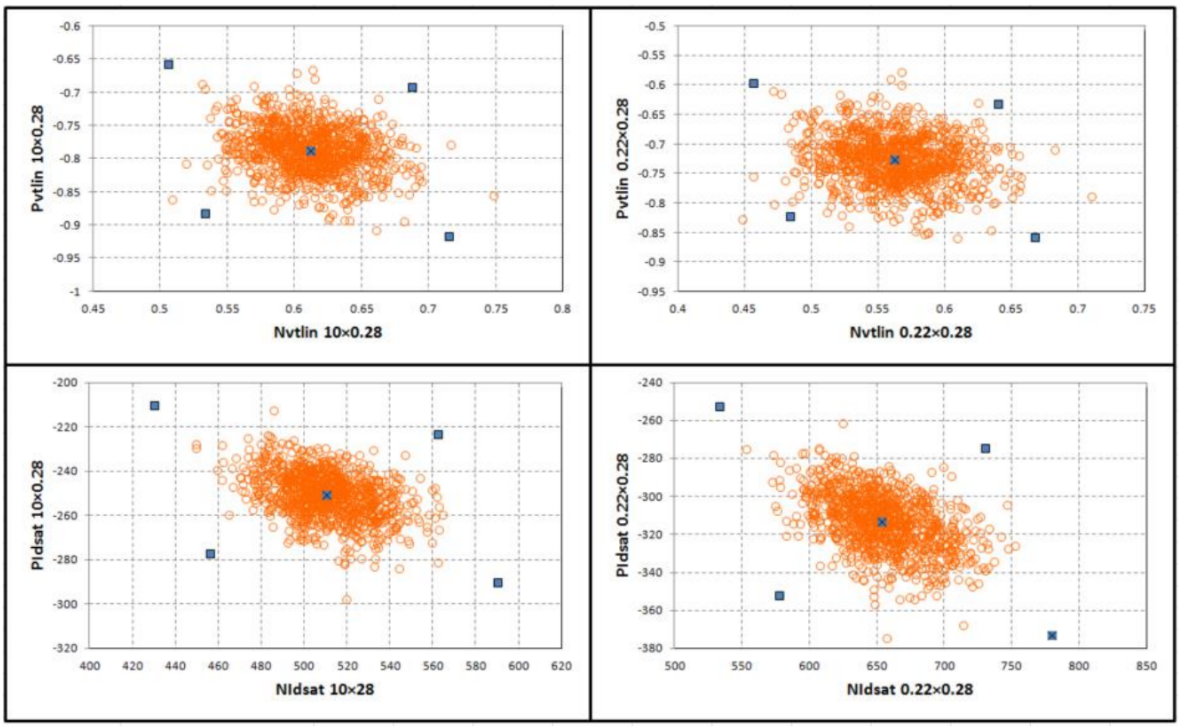

9.3.2 6V NMOS and PMOS PROCESS MC

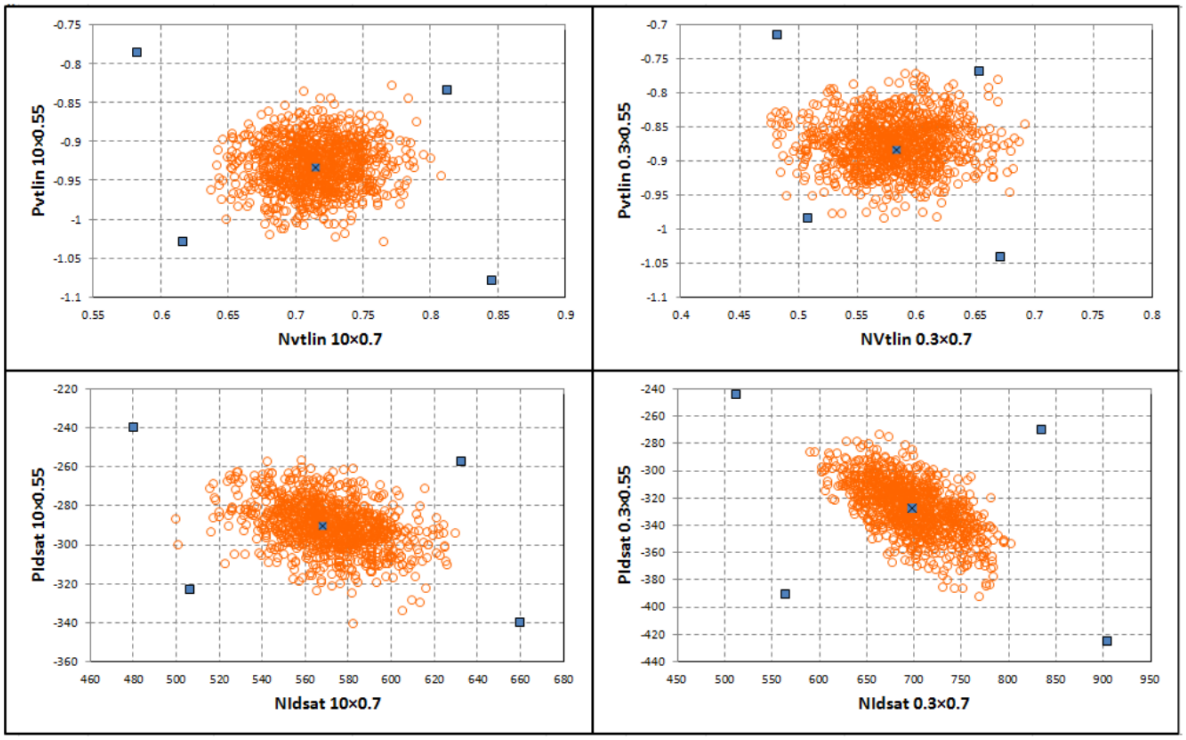

9.3.3 3.3V SAB NMOS and SAB PMOS PROCESS MC

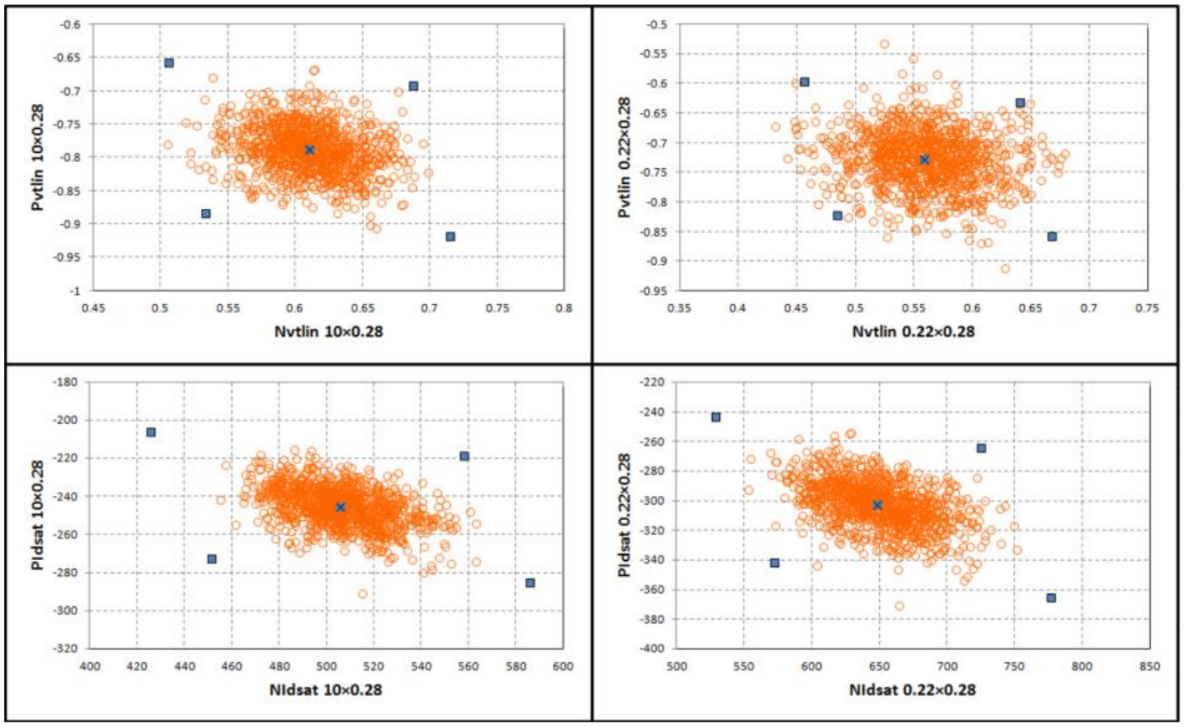

9.3.4 6V SAB NMOS and SAB PMOS PROCESS MC

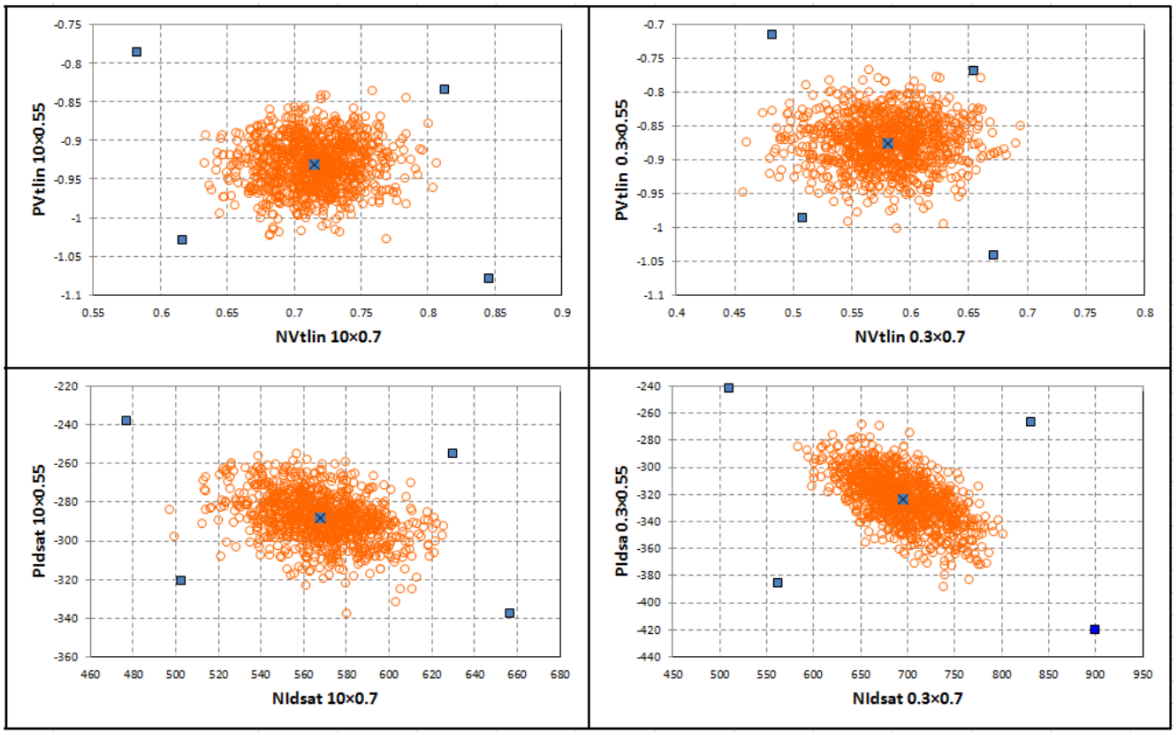

9.4 Mismatch MOSFET Modeling Results

9.4.1 3.3V NMOS and PMOS mismatch verification plots

Biasing Conditions (positive sign for NMOS, negative for PMOS):

- Vtlin=Vg@ Vds= 0.1V; Vt @ Id= 0.1μA*(W/L)
- Idsat=Id @Vg=3.3V, Vd= 3.3V, where Vbulk = 0V

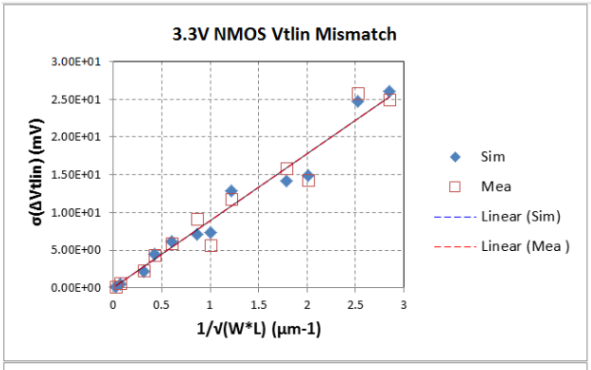

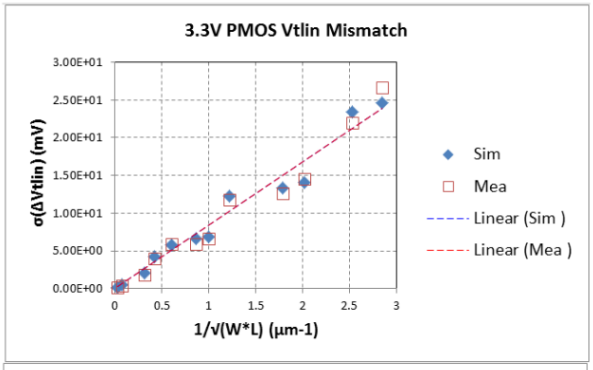

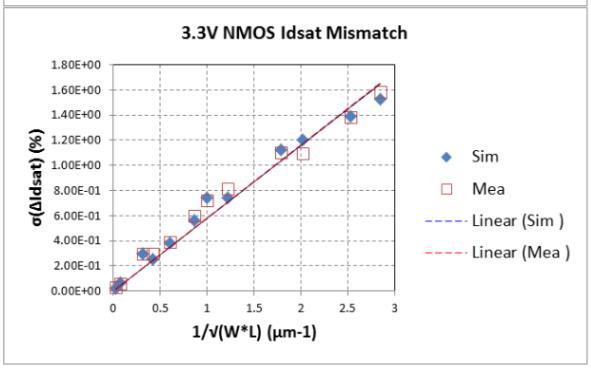

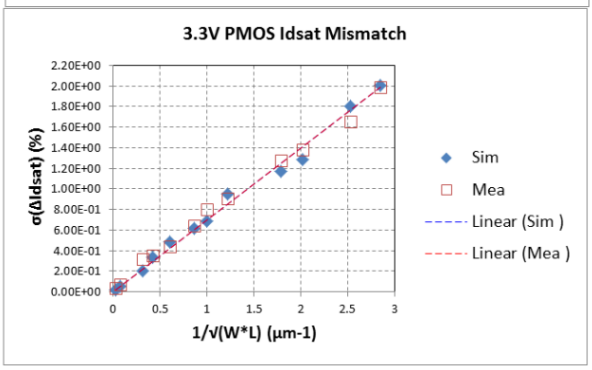

9.4.2 6V NMOS and PMOS mismatch verification plots

Biasing Conditions (positive sign for NMOS, negative for PMOS):

- Vtlin@ Vds= 0.1V; Vt @ Id= 0.1μA*(W/L)
- Idsat @Vg=6V, Vd= 6V, where Vbulk = 0V

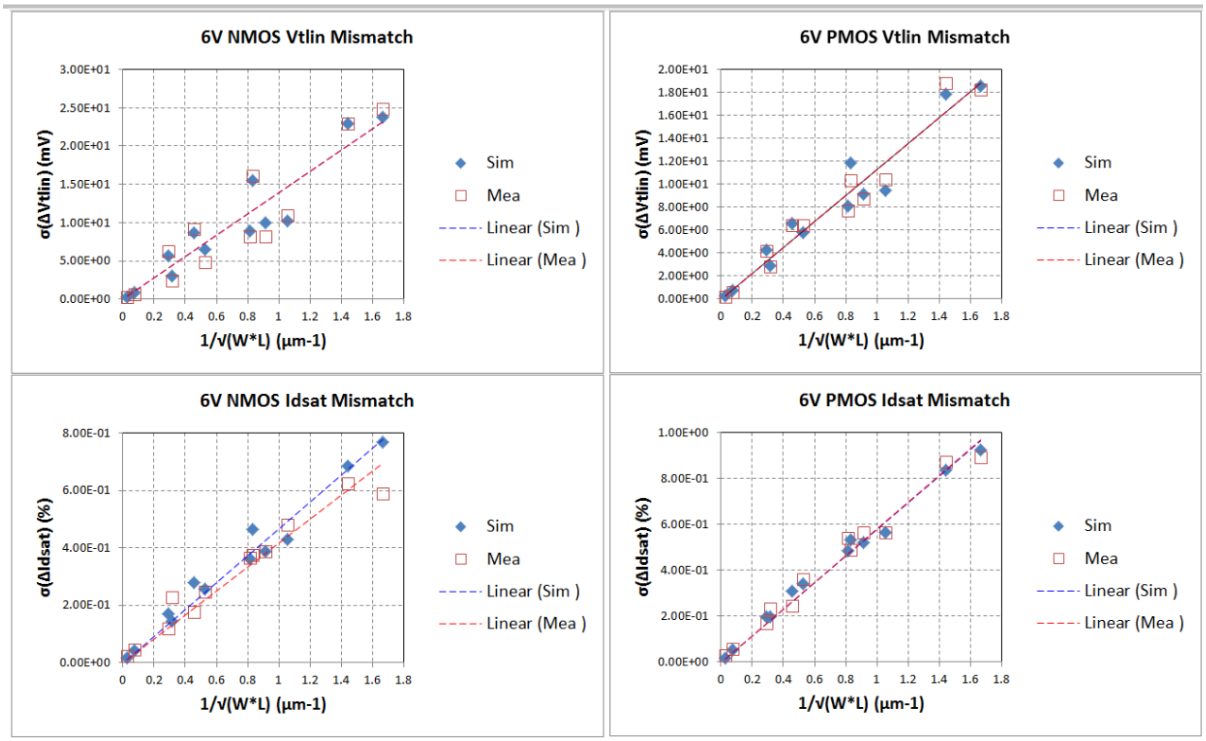

9.5 Mismatch Resistor Modeling Results

The number of runs for each model type is 1000 runs. Current density used for measurement is 100uA/um.

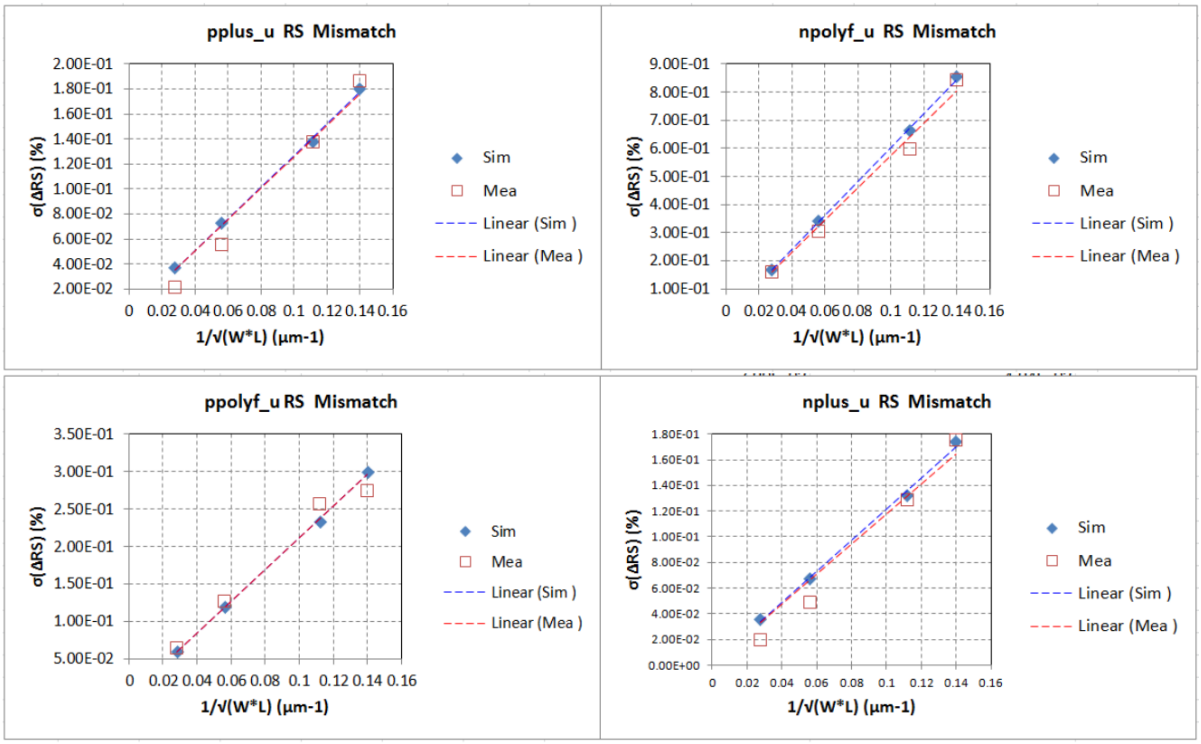

9.6 Mismatch BJT Modeling Results

The number of runs for each model type is 1000 runs. The measurement condition for Vbe is: Vc=Vb=Vsub=GND, Ie=10uA, while for Ib it is Vc=Vb=Vsub=GND, Ve = 0.7V.

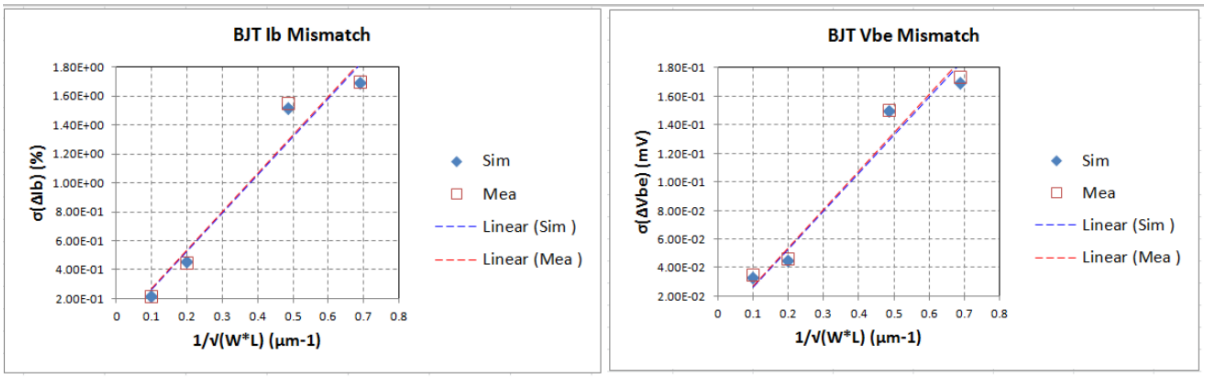

2.3.2 FAB3E Spice Model For 0.18um 10v High Voltage MCU Process

FAB3E Spice Models For 0.18um

10V High Voltage MCU Process

Model Reference Guide

1.0 Introduction

The main purpose of this reference guide is to provide designers with information on GlobalFoundries 0.18um 10V High Voltage MCU Process SPICE models, beyond which is currently available in other documentation (see "Additional References"below).

1.1 Scope

This documentation contains the following types of information:

- GlobalFoundries CMOS modeling methodology overview
- Model features, limitations and/or restrictions
- Conditions used for device characterization or model extraction

1.2 Model Overview

GlobalFoundries' models are physics-based, scalable compact models, in contrast to models based on fitting a discrete device. This allows the greatest amount of flexibility for designers and provides good model accuracy over a broad range of applications.

Within the model files, a complete set of parameters for arbitrary device geometries is generated from a single set of technology specific electrical and process data. For this, each value of the required model elements is related to a function describing the dependence on the specific electrical data (such as capacitance per area, sheet resistivity), technology data (layout design rules), operating point and temperature. This type of physics- based model allows us to leverage the large volumes of in-line test data and provides a realistic approach to statistical modeling.

Other important features:

1. Electrical data is extracted using near-nominal process hardware
2. Statistical variation is measured using either process split hardware or distributions from in-line data
3. The electrical data comes from DC characterization (over voltage and temperature) and CV characterization.

1.4 Device List

The following table lists the basic models and their corresponding names in the design manual.

1.4.1 MOSFETs

Model Name	Device Description	BSIM Version	Scalable	Corner Model Available	Global Statistical	NF scaling
nfet_10v0_asy	Asymmetrical LDNMOS (10V)	4.6	Y	Y	Y	N
pfet_10v0_asy	Asymmetrical LDPMOS (10V)	4.6	Y	Y	Y	N

1.5 Instance Parameters List

This section describes the instance parameters to be used in the net list for all the devices

1.5.1 MOSFET Instance parameters

The MOSFET instance parameters shall be used in the netlist are described below with their default values: -

Parameter	Description
w	Device width in meter
l	Device length in meter
m	Device multiplicity factor
nf	Number of PC (gate) fingers
as	Source diffusion area in meter^2
ad	Drain diffusion area in meter^2
ps	Source diffusion perimeter in meter
pd	Drain diffusion perimeter in meter
par	Device multiplicity factor used for mismatch simulation only

Note: All the instance parameters are case insensitive for HSPICE. For SPECTRE, the lower case should be used for the above parameters.

2.0 MOSFET Models

2.1 MOSFET Model Extraction

The models were extracted based on DC I-V data taken from a matrix of width and length devices at three temperatures, -40C, 25C, and 125C & verified up to 175C, under zero and different biases for body, gate and drain.

The models were fitted to the hardware first, and then re-centered to match the design manual nominal target. During the model build, the devices' I-V was measured on both the isolated and the nested devices. Careful calibration of gate length was required to ensure correct relationship of device parameters (current, vt, gds, etc) to gate capacitance.

The process tolerance, such as tox, delta L and delta W etc, based on the design manual specs were added to the models for process skew simulation.

The Tox values used in this model file are based on the electrical measurements of the devices in inversion i.e. at Vgs = Vdd, Vds = Vbs = 0. This can result in the Tox values to be different from the EP specifications. Centering criteria have been used for matching design manual targets with the compact models. A large difference between the centered model and the design manual targets may indicate:

1. A problem with running the model,
2. A model that is not up to date with the design manual,
3. Design manual update lags behind the model,
4. Spec was not available during the model build,
5. Hardware used in the model building is different for non-critical device dimension from ones used in the spec setting.

2.2 Model Features and Limitations

Model Features:

1. BSIM4.6 is used for FET modeling.
2. STI stress model was not used to fit the data.

Device width and length in a FET call:

During a FET netlist call, users should use design dimension for W and L, not effective width and length. In this release, the BSIM model parameter Lmin is set to the nominal drawn gate length. This may cause warnings to be generated during corner simulations when the biased gate length becomes less than Lmin. This warning has no effect on the simulation results.

Model Limitations:

1. All global statistical models are EP target based (not silicon verified).
2. Drain side & source side diode of LDNMOS are leveraged from NWell/PSUB & N+/PSUB diode from 0.18um 3.3V/(6V) MCU HV Process respectively.
3. Drain side & source side diode of LDPMOS are leveraged from PWell/DNWell & P+/NWell diode from 0.18um 3.3V/(6V) MCU HV Process respectively.

2.3 Notes

Minimum & Maximum Channel Width and Length Allowed

The minimum and maximum channel width allowed in a design should be commanded by the design rule of the process. The parameters wmax, wmin, lmax & lmin are used to define SPICE models' extraction range only.

Device width and length in a FET call

During a FET netlist call, users should use design dimension for W and L, not effective width and length. In this release, the BSIM3 model parameter Lmin is set to the nominal drawn gate length. This may cause warnings to be generated during Monte Carlo and corner simulations when the biased gate length becomes less than Lmin. This warning has no effect on the simulation results.

2.3.1 Recommened Instance Parameter Range

Model Name & (BSIM Version)	Parameter Value	W (um)	L (um)	M	as (m^2)	ad (m^2)	ps(m)	pd (m)
nfet_10v0_ (BSIM 4.6)	Min	4	0.6	1	•	•	•	•
	Max	50	20	100	•	•	•	•
	Default	25	0.6	1	1.2E-11	3.7E-11	5.10E-05	5.30E-05
pfet_10v0_ (BSIM 4.6)	Min	4	0.6	1	•	•	•	•
	Max	50	20	100	•	•	•	•
	Default	25	0.6	1	1.2E-11	4.45E-11	5.10E-05	5.36E-05

2.4 MOSFET Fixed Corner Models

2.4.1 Fixed Corner Methodology

This section discusses the definition of the fixed corners supplied with GlobalFoundries MOSFET models. There are many ways to define the process skew corners. Process corners of a circuit are related to the circuit design sensitivities to the process parameters, particularly in analog circuits. We are in no position to cover all the possible corners. The provided corner models are primarily for predicting static logic delay. Corner models for these devices are based entirely on line data and EP specifications of the devices. A fixed corner model is selected by including the appropriate corner library models as described and illustrated in Section 3.4.2. Each corner model has some parameters set to appropriate defined values for each corner. Currently ability to customize corner models by over-riding the defined values is not supported in this release.

2.4.2 Corner Model Definitions

Corner/Library Name	Definition Purpose
typical	Nominal process/Estimate typical performance
ff	Bound EP specifications extreme Idsat, Vt & Idlin (LDNMOS only) for wide and narrow short channel FETs. Verify circuit robustness under extreme process condition with fast NFET and fast PFET
ss	Bound EP specifications extreme Idsat, Vt & Idlin (LDNMOS only) for wide and narrow short channel FETs. Verify circuit robustness under extreme process condition with slow NFET and slow PFET
fs	Match Idsat, Vt & Idlin (LDNMOS only) skew between NFETs and PFETs based on line data and EP specifications. Circuit operation under N to P mismatch, for fast NFET and slow PFET
sf	Match Idsat, Vt & Idlin (LDNMOS only) skew between NFETs and PFETs based on line data and EP specifications. Circuit operation under N to P mismatch, for slow NFET and fast PFET

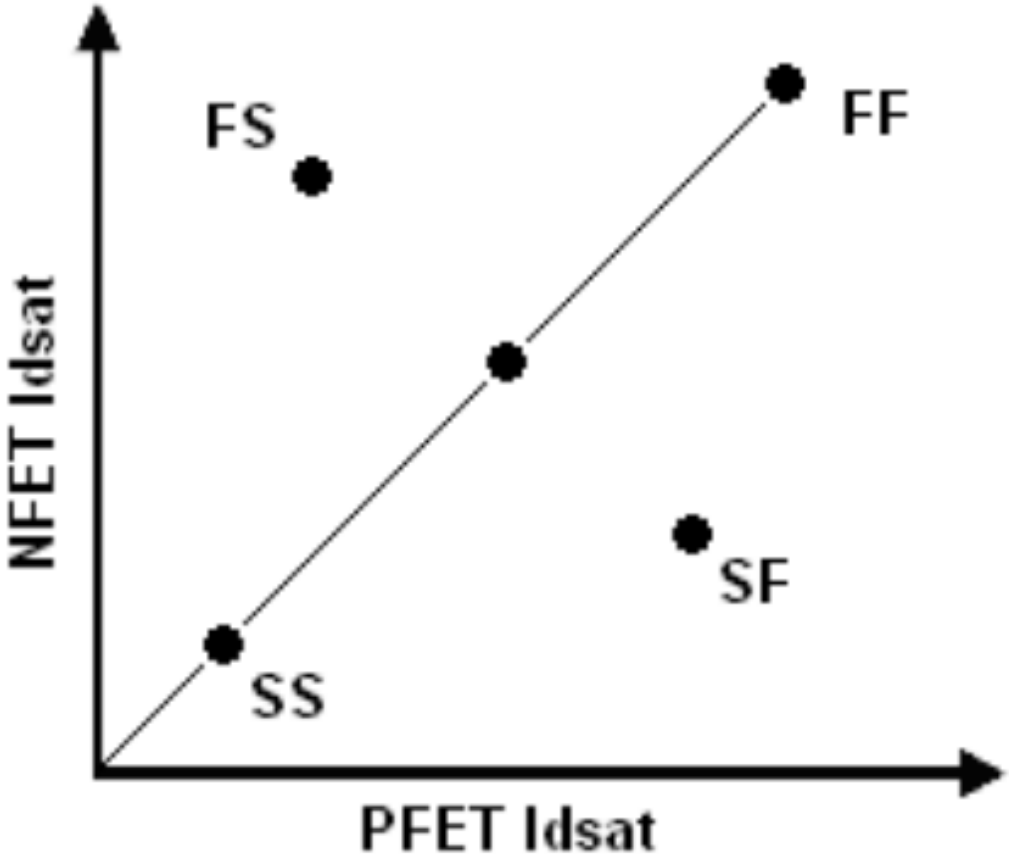

2.5 Model vs. EP Nominal Target

In the following sections, the comparison of the key device parameters between the models and EP targets are listed for each device. The values are for temperature at 25 C unless specified otherwise.

2.5.1 10V LDNMOS & LDPMOS

EP Specification				Measurement	
Device (W/L)	Model	Idsat (uA/um)	Vtlin	Idsat (uA/um)	Vtlin (V)
nfet_10v0_asym (25/0.6),nf=	slow	444	0.97	-	-
	typical	535	0.84	543	0.83
	fast	626	0.71	-	-
pfet_10v0_asym (25/0.6),nf=	slow	-200	-0.88	-	-
	typical	-260	-1.02	-268	-1.02
	fast	-320	-1.16	-	-

Conditions:

Conditions	Idsat	Vtlin
10V LDNMOS	Vds = 10V, Vgs = 6V	Vds = 0.05V @Id=0.1*(W/L) uA
10V LDPMOS	Vds = -10V, Vgs = -6V	Vds = -0.05V @Id=-0.1*(W/L) uA

2.6 How to Use the Models

2.6.1 For NGSPICE Users

To be added

2.6.2 For XYCE Users

To be added

3.0 Model to Hardware Correlation

3.1 MOSFETS

3.1.1 10V Asym LDNMOS

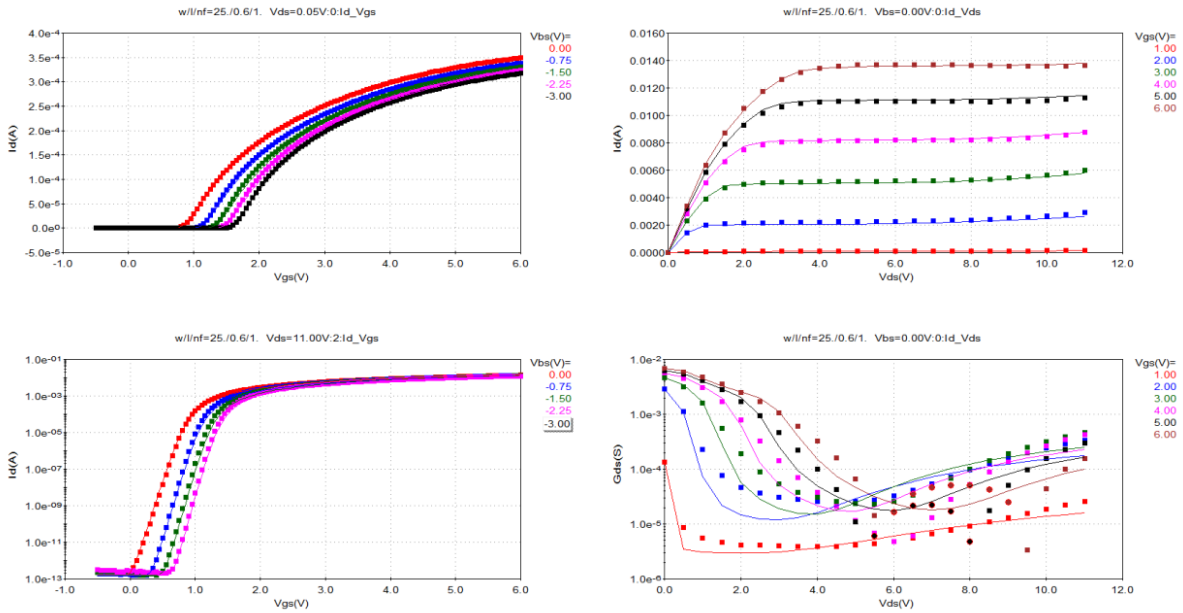

Figure 1: Plot of 10V Asym LDNMOS W/L=25/0.6, nf=1 @ T=25C

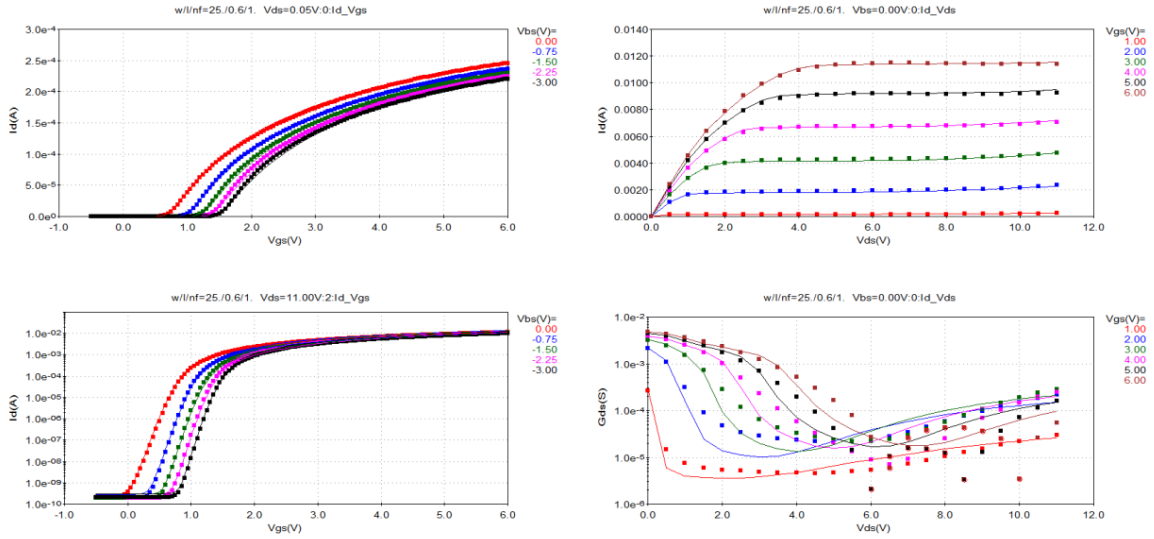

Figure 2: Plot of 10V Asym LDNMOS W/L=25/0.6 @T=125C

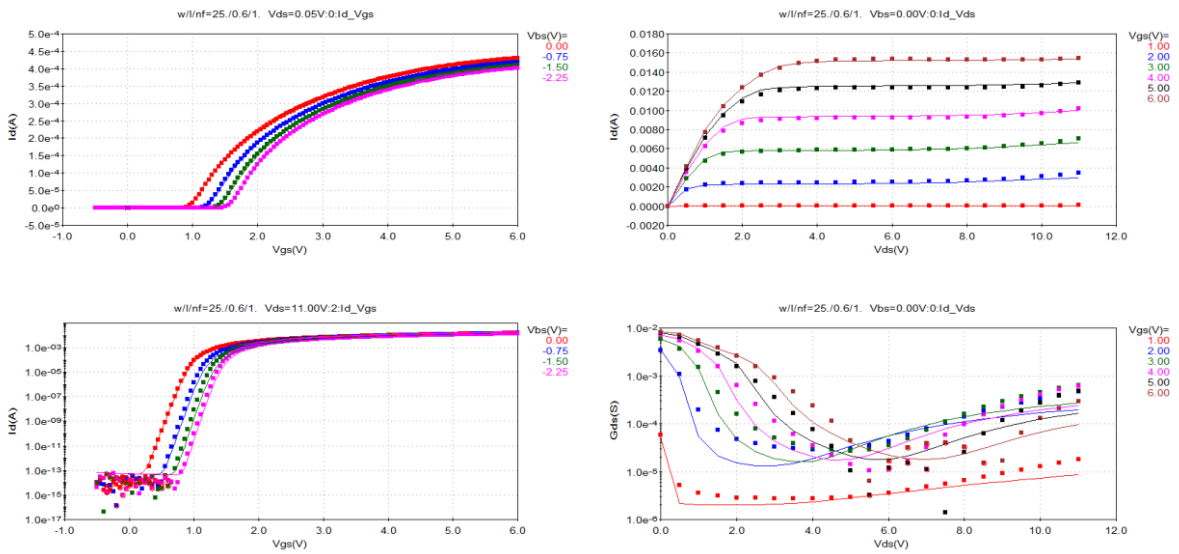

Figure 3: Plot of 10V Asym LDNMOS W/L=25/0.6 @ T=-40C

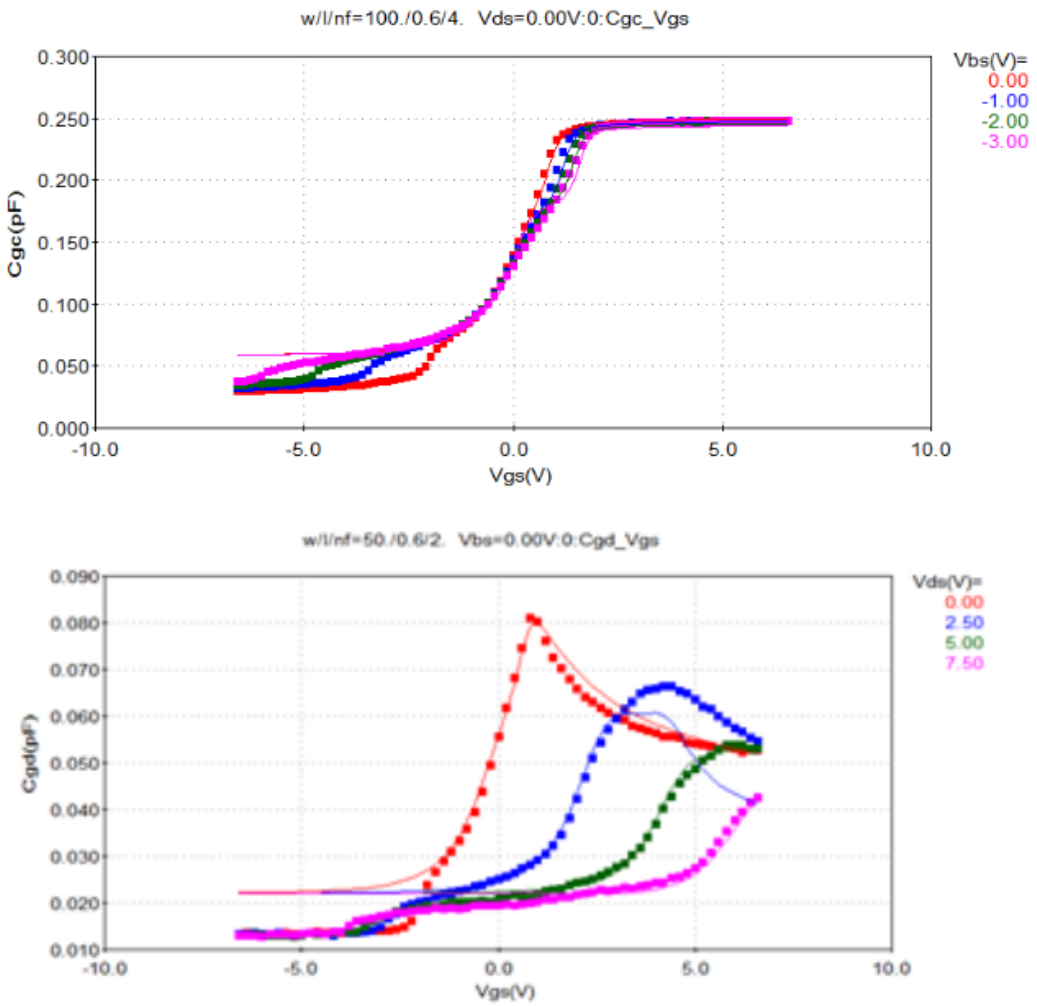

Figure 4: Plot of 10V Asym LDNMOS CV, W/L=100/0.6, nf=4 @ T=25C

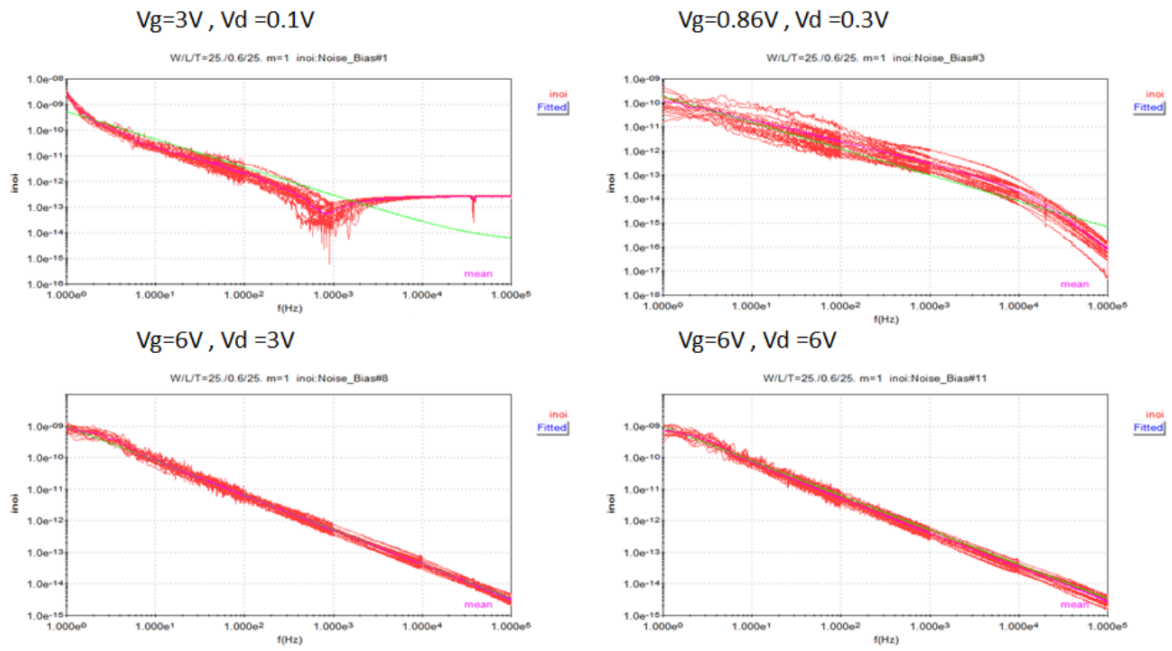

Figure 5: Plot of 1/f noise W/L/nf=25/0.6/1 @ T=25C

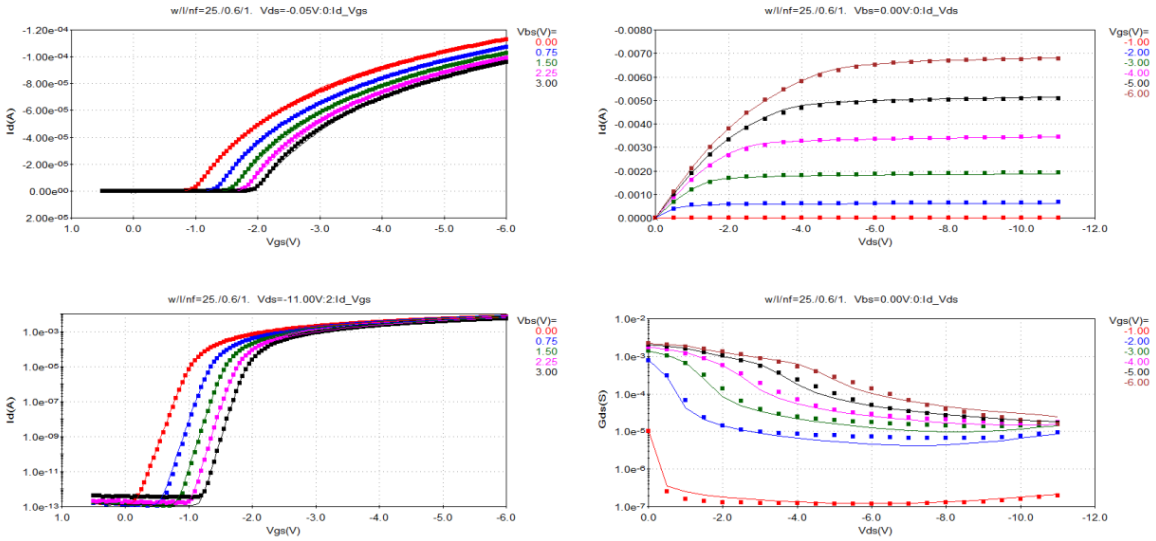

Figure 6 Plot of 10V Asym LDPMOS W/L/nf=25/0.6/1 @ T=25C

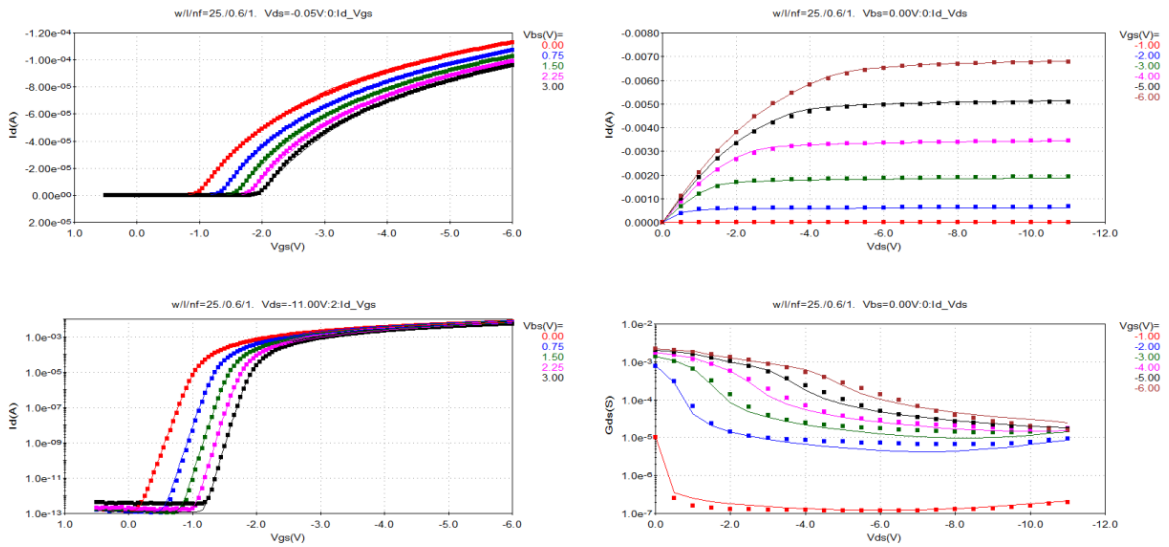

Figure 7: Plot of 10V Asym LDPMOS W/L/nf=25/0.6/1 @ T=125C

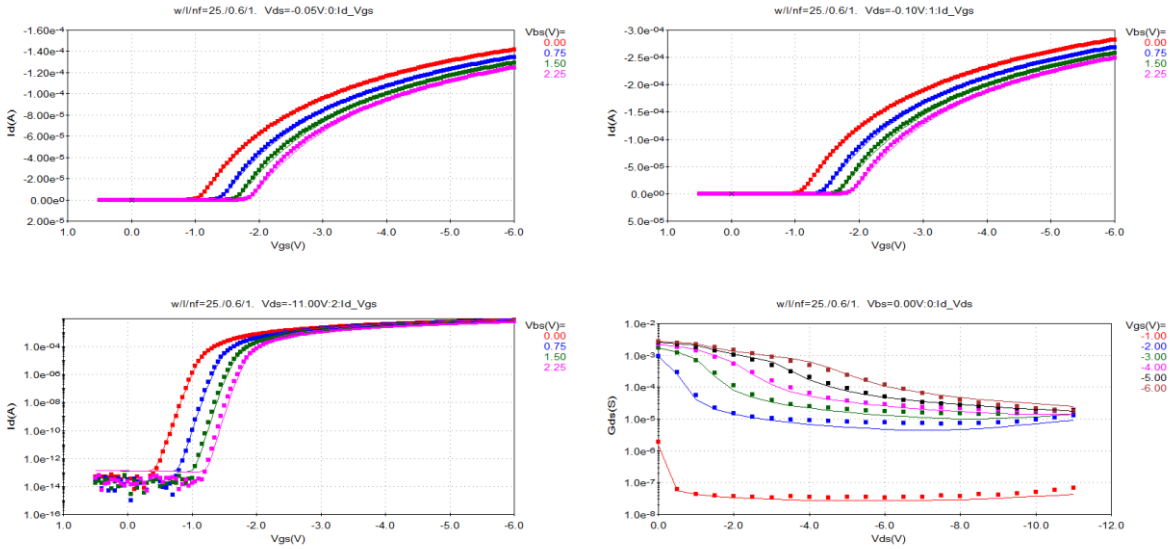

Figure 8: Plot of 10V Asym LDPMOS W/L/nf=25/0.6/1 @ T=-40C

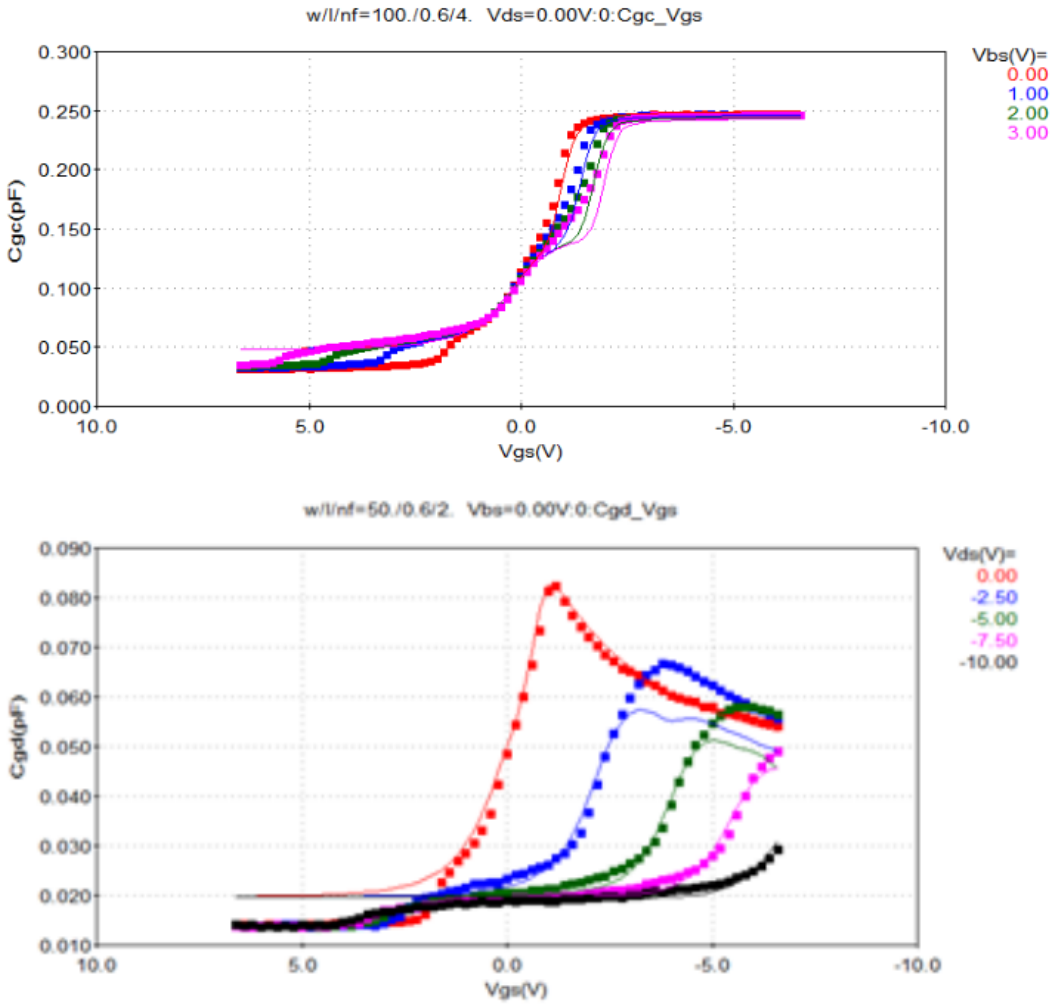

Figure 9 : Plot of of 10V Asym LDPMOS CV W/L/nf=100/0.6/4

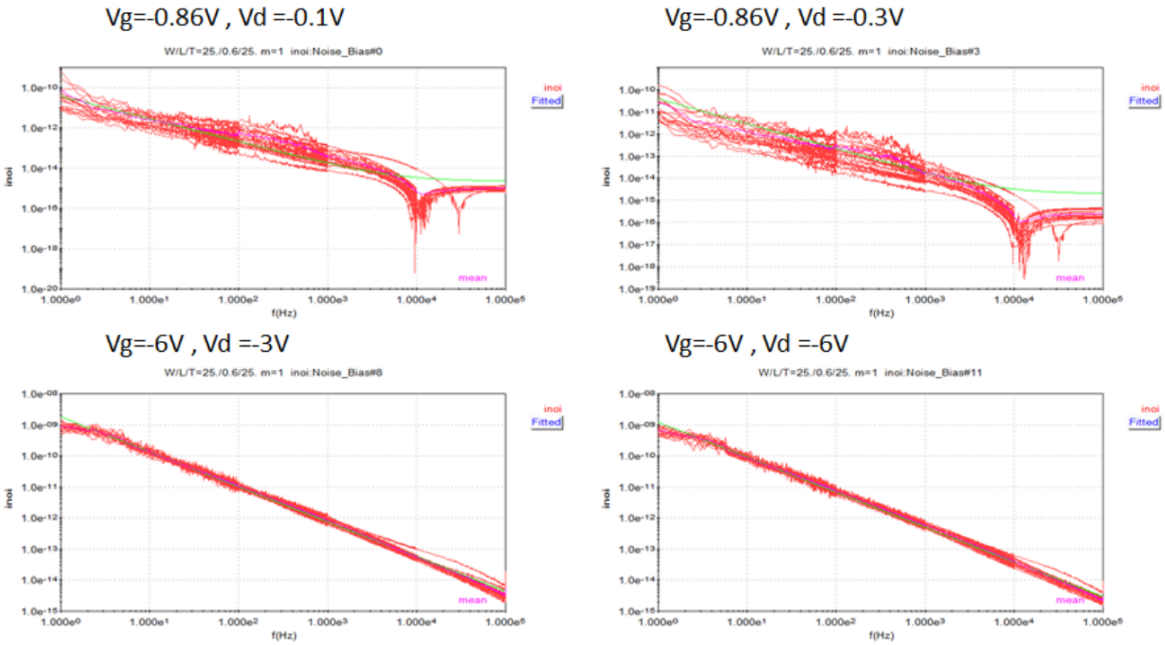

Figure 10 : Plot of 10V Asym LDPMOS 1/f noise W/L/nf=25/0.6/1 @ T=25C

4.0 Statistical Models

Uncertainties are inherent in the fabrication of transistors. The same transistor design can show different performance when fabricated using different equipment, at different locations, or during different times. In order to capture these variations of performance, a statistical model is necessary.

The following table lists statistical models that are available in this release.

List of Available Statistical Models

MOSFET Model	Both Local and Global	Description
nfet_10v0_asym	global only	Statistical BSIM4 model for Asym 10 V LDNMOS
pfet_10v0_asym	global only	Statistical BSIM4 model for Asym 10V LDPMOS

Note: * All MOSFET global statistical models are EP target based model

4.1 Statistical Models Syntax & Usage

4.1.1 General Syntax

The general model syntax is described below.

To run Monte Carlo simulations, designers are required to include the following elements in their netlist.

Library invocation:

To be added

Transistor declaration:

To be added

4.1.2 Parameter switches

To be added

4.1.3 MC skew limit parameter

To be added

The skew parameter is used to model the tightening or loosening of manufacturing process variation. The default value of fet_mc_skew/ res_mc_skew/ cap_mc_skew is 3. Hence in the case of EP spec bound statistical (MC) models, if the actual manufacturing variation is smaller than the EP spec limit, a skew value < 3 can be used to produce a tighter Monte Carlo simulation.

The fet_mc_skew/ res_mc_skew/ cap_mc_skew parameter affects global variation only. It does not affect the mismatch simulation.

The following plots show an example of the results when fet_mc_skew is set to different values:

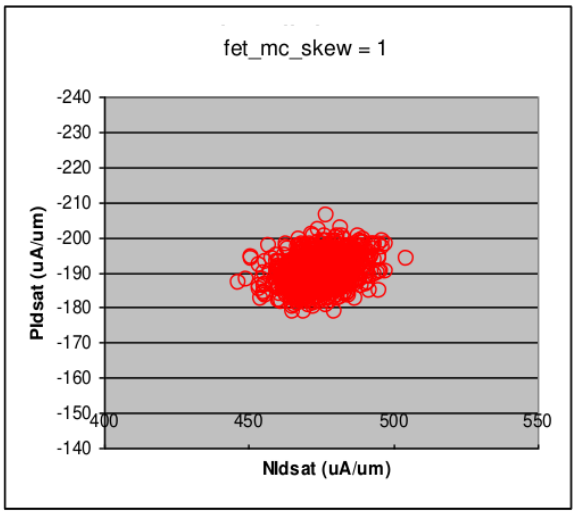

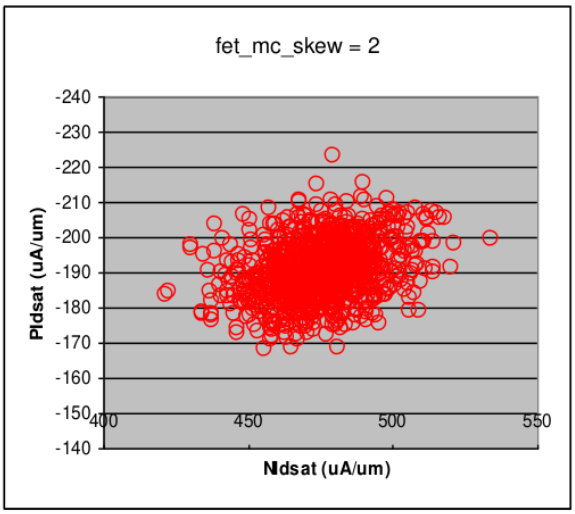

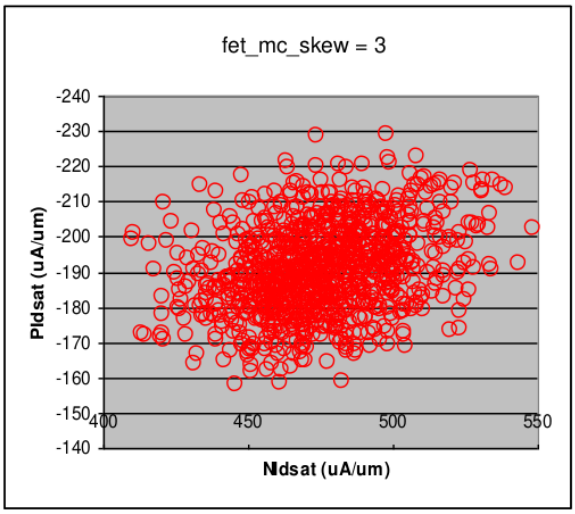

The value of the fet_mc_skew parameter can be any real number greater than 0. When simulating MC parallel device, in order to get consistent mismatch results, both “m” and “par” multiplicity factors parameters are needed. It must instantiated as follows:

- Xm11 2 0 0nfet_10v0_asymw=10u l=10u m=10
- Xm21 2 0 0pfet_10v0_asymw=10u l=10u m=10

4.2 Global Statistical Modeling Results

To verify the model, Monte Carlo simulations were run and the output was compared with the measured data.

The verification plots below compare the NMOS data with the PMOS data (except for native devices). This plot captures 3 pieces of information: the variance of the NMOS data, the variance of the PMOS data, and the covariance of the NMOS data vs. the PMOS data.

The number of runs for each model type is 500 runs. In normal usage though, such a large number of runs is not necessary. 100 to 200 runs would be a typical number. Certainly, for a large circuit, it may not be feasible to make a large number of Monte Carlo simulations. The following plots compare the measurement results and the simulation results. Results shown are for fet_mc_skew = 3.

4.2.1 Isolated 10V LDMOS Process MC

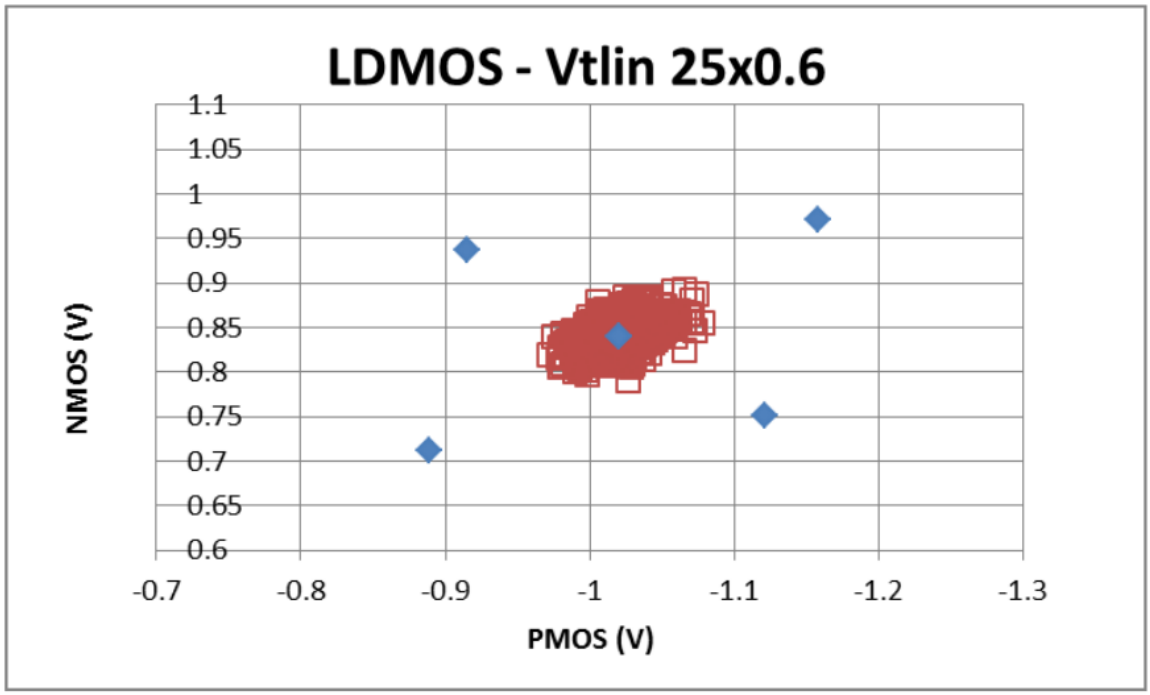

Figure 11: Plot of 10V LDMOS Vtlin global distribution (W/L=25/0.6)

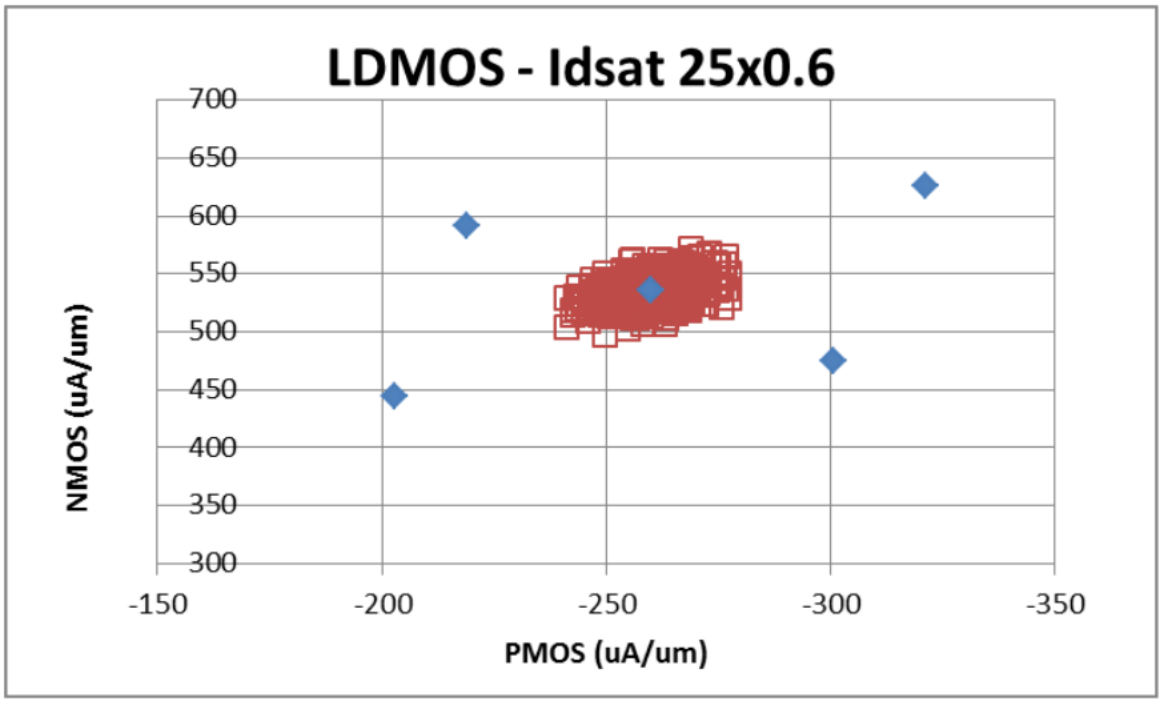

Figure 12: Plot of 10V LDMOS Idsat global distribution (W/L=25/0.6)

CHAPTER

THREE

IPS / MACROS

3.1 I/O

3.1.1 gf180mcu_fd_io 5V Inline non-CUP GPIO

GlobalFoundries 0.18µm Green Process

5V Wide-Range Inline non-CUP GPIO Library

Datasheet

1.0 Introduction

This document serves as the data sheet for **GlobalFoundries 0.18µm Green (5.0V) Process 5V Wide-Range Inline non-CUP GPIO Library.** This I/O cell library consists of bidirectional and input only I/O pad cells; analogue signal pad cells; I/O supply and ground pad cells; core supply and ground pad cells; corner, filler and breaker pad cells.

1.1 Cell List

Cell Type	Cell Name	Description
Bidirectional	gf180mcu_fd_	5V WR bidirectional pad with programmable drive strength of 4mA, 8mA, 12mA and 16mA tri-state output buffer, fast/slow slew rate control, pull-up/down and selectable CMOS/Schmitt input.
	gf180mcu_fd_	5V WR bidirectional pad with 24mA drive strength tri-state output buffer, fast/slow slew rate control, pull-up/down and selectable CMOS/Schmitt input.
Input	gf180mcu_fd_	5V WR CMOS input only pad with pull-up/down
	gf180mcu_fd_	5V WR Schmitt Trigger input only pad with pull-up/down
Analog	gf180mcu_fd_	5V WR analogue signal pad with double diode protection (DC current carrying capability 10mA)
Power Supply	gf180mcu_fd_	Power supply cell (DC current carrying capability 60mA)
	gf180mcu_fd_	Ground cell (DC current carrying capability 60mA)
Corner	gf180mcu_fd_	Corner cell
Filler	gf180mcu_fd_*	Filler for gap width less than 1μm
	gf180mcu_fd_	1μm filler
	gf180mcu_fd_	5μm filler
	gf180mcu_fd_	10μm filler
Breaker	gf180mcu_fd_	2μm Breaker with VSS
	gf180mcu_fd_	5μm Breaker with VSS

Note: gf180mcu_fd_io__fillnc can't be used as a standalone cell and it must be used with gf180mcu_fd_io__filln (n>=2).

1.2 Device List

nmos_6p0, pmos_6p0, pn_6p0, np_6p0, ppolyf_u, nmoscap_6p0, nmos_6p0_sab, pmos_6p0_sab.

1.3 Design Manual

This design is based on *Design Manual*

2.0 Library Features

2.1 Technology Options

The GlobalFoundries 0.18μm Green 5V I/O library is available in 3LM, 4LM, 5LM metal stack options. The bond pad is **non-CUP** due to design manual restriction on 3LM. The top metal thickness is available in 6kÅ and 9kA. The design grid used is 0.005μm.

2.2 Cell Dimensions

Pad Cell Name	Height (est.)	Width (est.)	Unit
gf180mcu_fd_io__bi_t	350	75	μm
gf180mcu_fd_io__bi_24t	350	75	μm
gf180mcu_fd_io__in_c	350	75	μm
gf180mcu_fd_io__in_s	350	75	μm
gf180mcu_fd_io__asig_5p0	350	75	μm
gf180mcu_fd_io__dvdd	350	75	μm
gf180mcu_fd_io__dvss	350	75	μm
gf180mcu_fd_io__cor	355	355	μm
gf180mcu_fd_io__fillnc	350	0.1	μm
gf180mcu_fd_io__fill1	350	1	μm
gf180mcu_fd_io__fill5	350	5	μm
gf180mcu_fd_io__fill10	350	10	μm
gf180mcu_fd_io__brk2	350	2	μm
gf180mcu_fd_io__brk5	350	5	μm

The I/O cell height of 350μm (est.) is inclusive of the bonding pad. The bond pad opening is 60μmx60μm.

3.0 Naming Convention

3.1 Cell Naming Convention

Digital I/O Cell

	Symbol	Description
Cell Type	GF	GF pad cell
I/O Type	_in	Input
I/O Type	_bi	Bidirectional
Output Type	_xt	Tristate with drive strength of x mA

Analogue Signal Cell

	Symbol	Description
Cell Type	GF	GF pad cell
Function	_asig_5p0	Analogue I/O for 5.0V device

Support Cell

	Symbol	Description
Cell Type	GF	GF pad cell
Power	_dvdd	DVDD power cell
	_dvss	DVSS ground cell
Corner	_cor	Corner cell
Filler	_fillx	Filler cell with width = x μm
Filler	_fillnc	Filler cell for gap width less than 1μm
Breaker	_brkx	Breaker cell with width = x μm

3.2 Pin Naming Convention

Digital I/O Cell

PIN	Function
DVDD	5V supply for output drivers
VDD	5V supply for pre-drive in I/O pads
DVSS	Ground for output drivers
VSS	Ground for pre-drive in I/O pads
IE	Input enable
PD	Pull-down enable
PU	Pull-up enable
Y	Data output to core
PAD	Data input from/output to bond pad
OE	Output enable
A	Data input from core
CS	CMOS/Schmitt trigger input select
SL	Fast/Slow slew rate select
PDRV0	Output drive strength selector
PDRV1	Output drive strength selector

Analogue Signal Cell

PIN	Function
ASIG5V	5V analogue signal input from/output to core
PAD	Data input from/output to bond pad

4.0 Functional Description

4.1 Digital I/O Cell Control Pins

IE	OE	Input/Output Control
0	0	Input & Output Disable
0	1	Output Enabled
1	0	Input Enabled
1	1	Disallowed

CS	Input Type
0	CMOS Buffer
1	Schmitt Trigger

PU	PD	Resistive Pulling
0	0	Normal CMOS
0	1	Pull Down
1	0	Pull Up
1	1	Normal CMOS

SL	Output Slew Rate
0	Fast
1	Slow

PDRV1	PDRV0	Output drive strength
0	0	4mA
0	1	8mA
1	0	12mA
1	1	16mA

4.2 Tri-state Programmable Digital I/O Cell

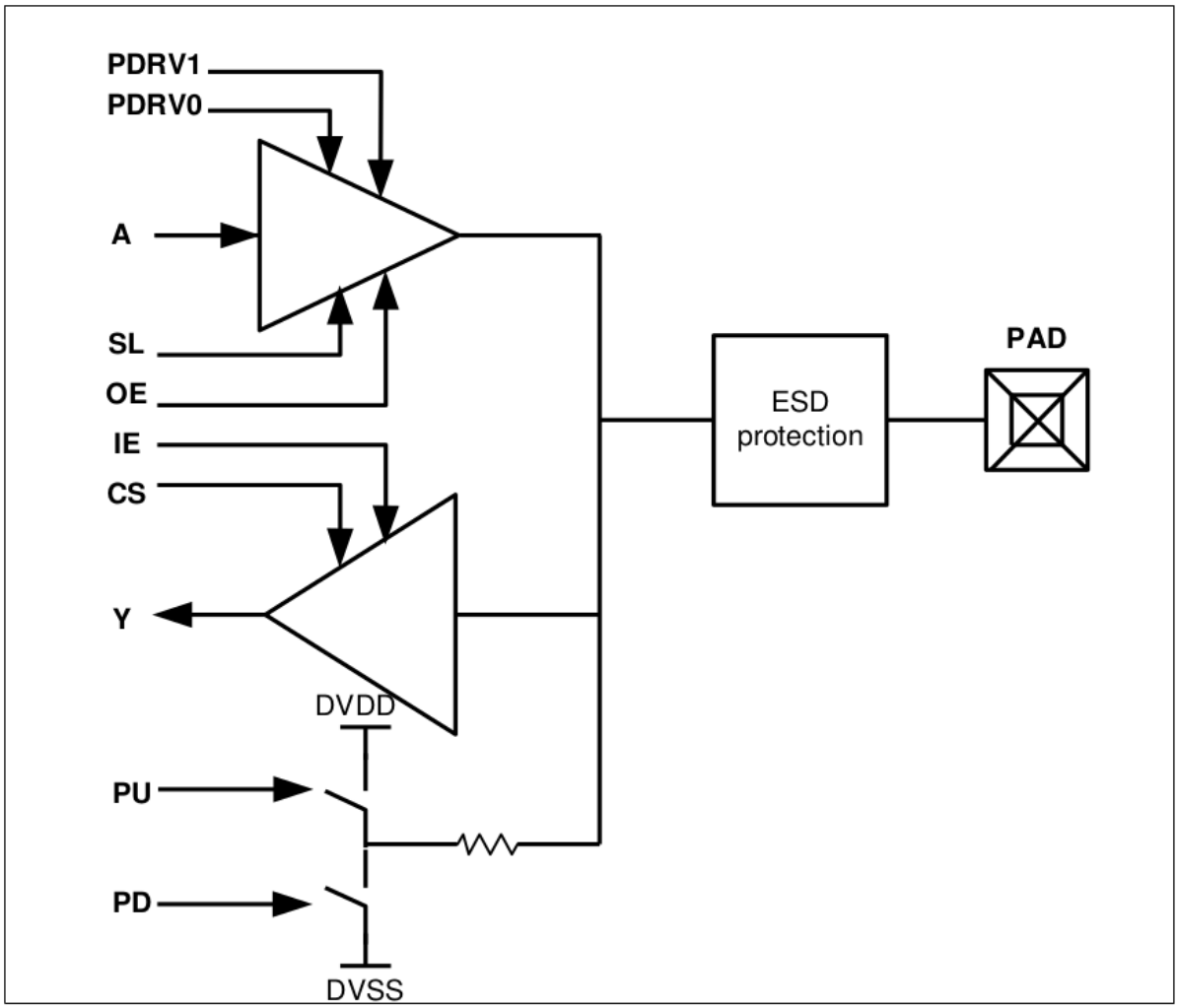

Figure 4.1 Functional Schematic of Tri-state Digital I/O Pad, gf180mcu_fd_io__bi_t

The pad **gf180mcu_fd_io__bi_t** is a 5V tri-state bi-directional I/O pad with programmable output drive strengths of 4mA, 8mA, 12mA and 16mA. It can be programmed as CMOS input or CMOS Schmitt trigger input and with or without pull-up/down. In the fast slew 16mA drive strength mode, it can runs at a frequency of 100MHz with 30pF capacitive load. The use of the control pins PDRV0, PDRV1, SL, CS is as shown in section 4.1. The logical operation of the cell is as shown below.

Driver Function

Input				Output
OE	PU	PD	A	PAD
0	0	0	X	Hi-Z
0	0	1	X	weak 0
0	1	0	X	weak 1
0	1	1	X	Hi-Z
1	X	X	0	0
1	X	X	1	1

Receiver Function

Input				Output
IE	PU	PD	PAD	Y
0	X	X	X	0
1	X	X	0	0
1	X	X	1	1
1	0	1	weak 0	0
1	1	0	weak 1	1

4.3 Tri-state 24mA Programmable Digital I/O Cell

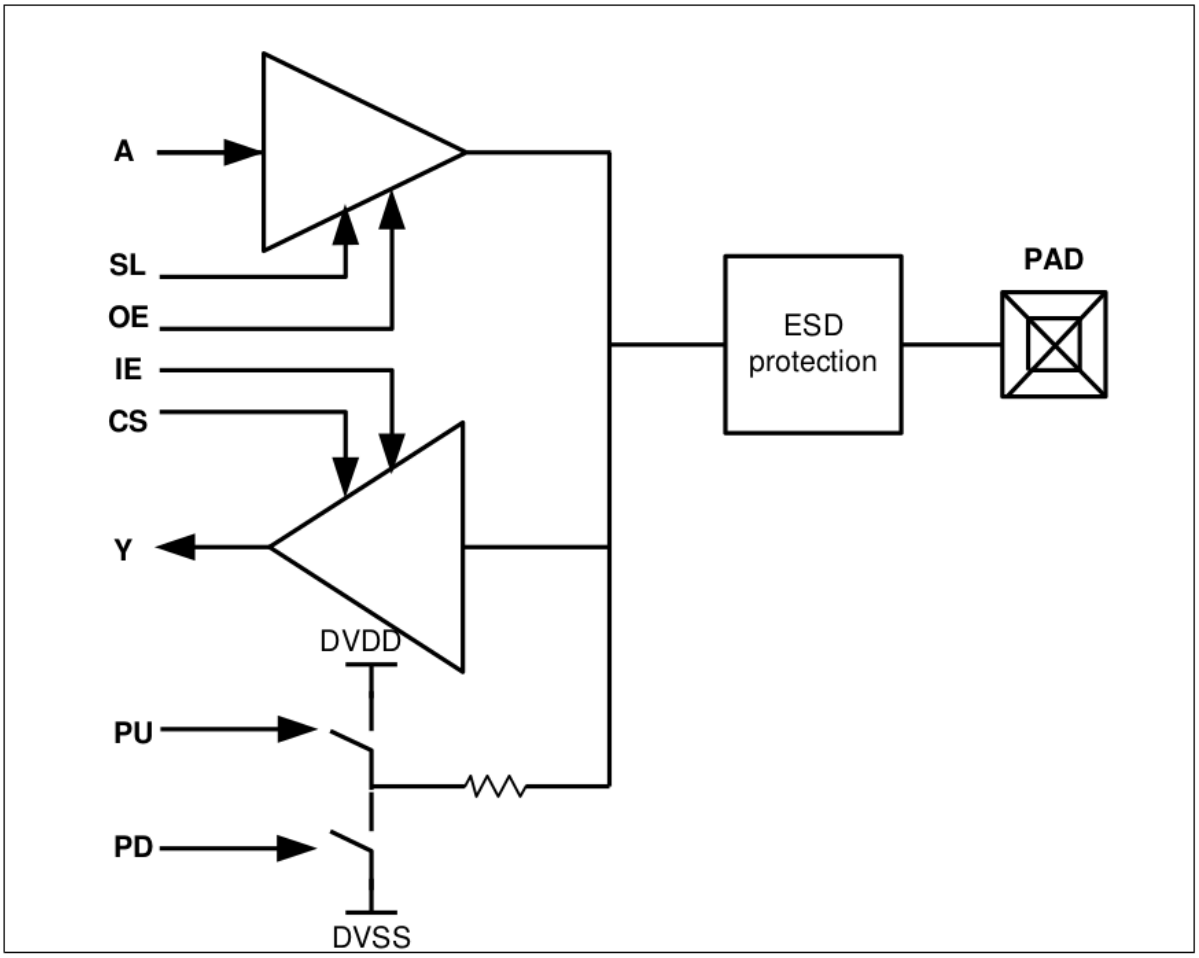

Figure 4.2 Functional Schematic of Tri-state Digital I/O Pad, gf180mcu_fd_io__bi_24t

The pad **gf180mcu_fd_io__bi_24t** is a 5V tri-state bi-directional I/O pad with output drive strength of 24mA. It can be programmed as CMOS input or CMOS Schmitt trigger input and with or without pull-up/down. In the fast slew mode, it can runs at a frequency of 100MHz with 50pF capacitive load. The use of the control pins PDRV0, PDRV1, SL, CS is as shown in section 4.1. The logical operation of the cell is as shown below.

Driver Function

Input				Output
OE	PU	PD	A	PAD
0	0	0	X	Hi-Z
0	0	1	X	weak 0
0	1	0	X	weak 1
0	1	1	X	Hi-Z
1	X	X	0	0
1	X	X	1	1

Receiver Function

Input				Output
IE	PU	PD	PAD	Y
0	X	X	X	0
1	X	X	0	0
1	X	X	1	1
1	0	1	weak 0	0
1	1	0	weak 1	1

4.4 Input Only I/O Cell

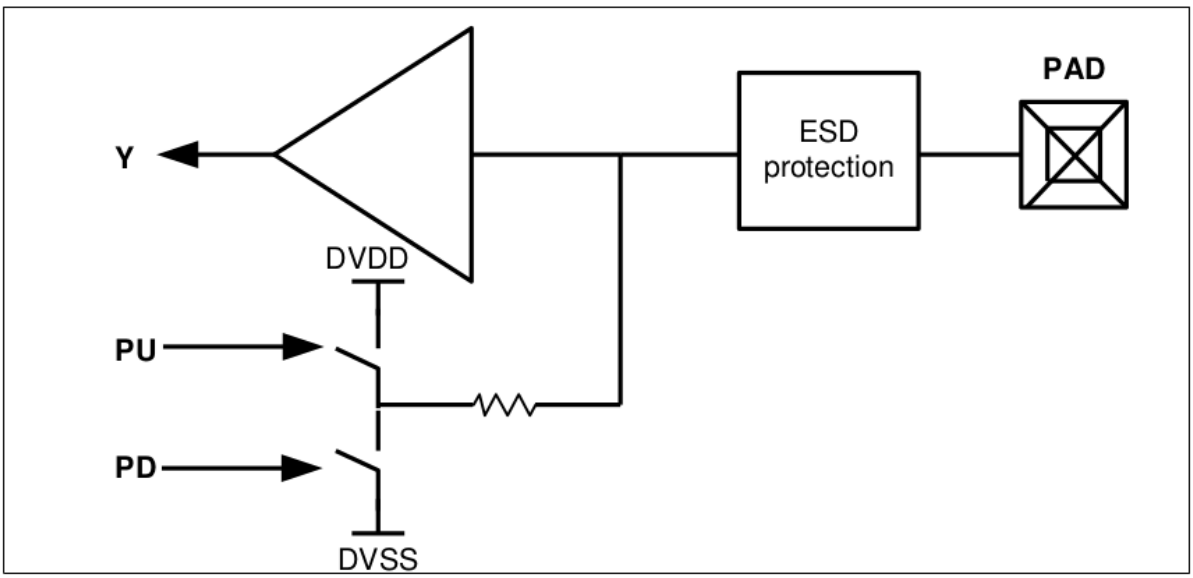

Figure 4.3 Functional Schematic of CMOS Input Only Pad, gf180mcu_fd_io__in_c

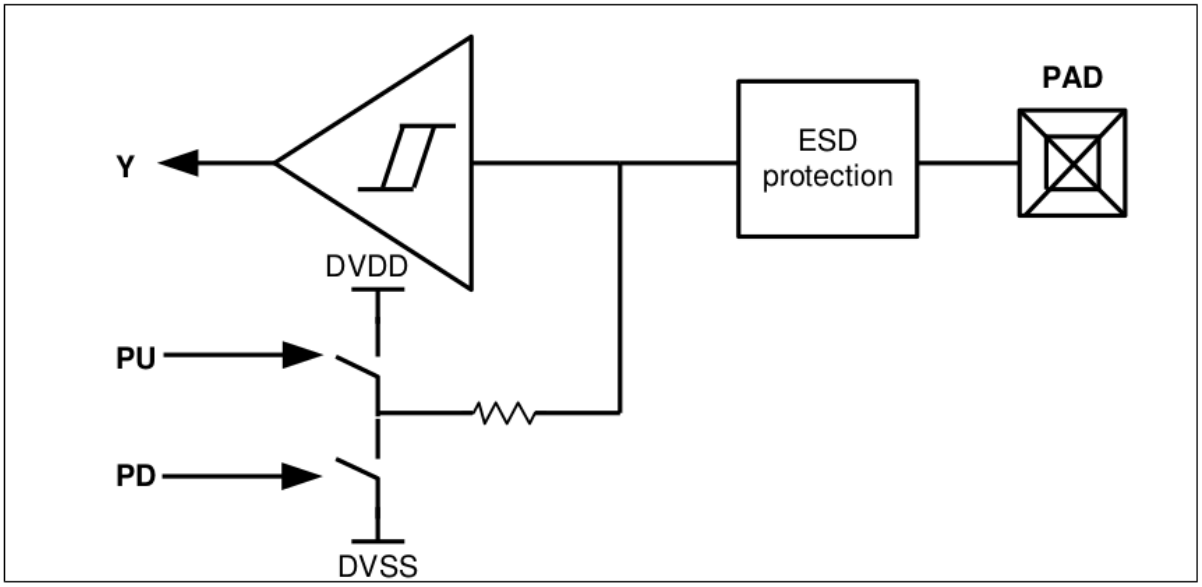

Figure 4.4 Functional Schematic of Schmitt Trigger Input Only Pad, gf180mcu_fd_io__in_s

gf180mcu_fd_io__in_c and **gf180mcu_fd_io__in_s** are input only pads configured in CMOS and Schmitt trigger modes respectively. Both pads are equipped with pull-up/down programmability. The logical operation of the pad is as shown below.

	Input		Output
PU	PD	PAD	Y
X	X	0	0
X	X	1	1
0	1	weak 0	0
1	0	weak 1	1

4.5 Analogue Signal Cells

The schematics for a 5.0V analogue signal pad cell is shown in Figure 5.5. The 5.0V analogue signal pad is meant for analogue circuits that use the thick-gate transistors.

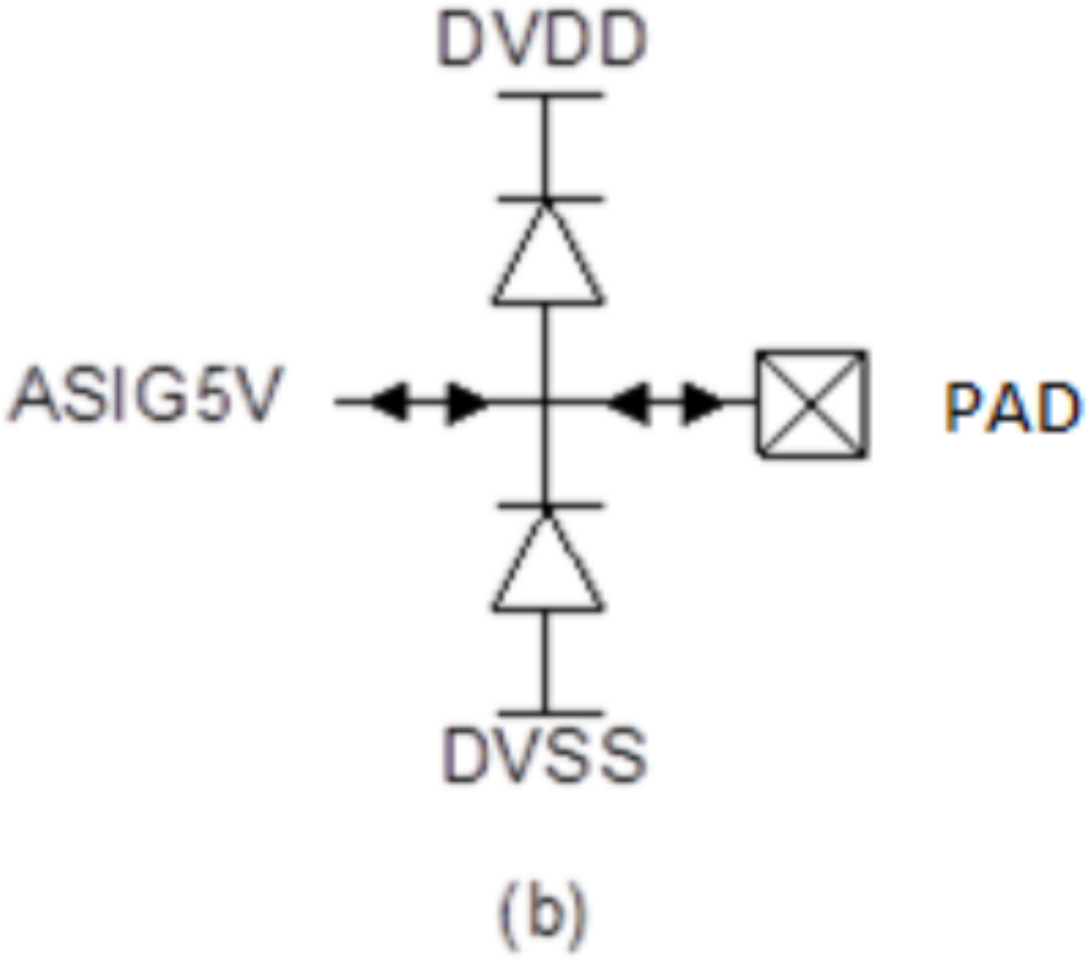

Figure 4.5 Functional schematic of 5V analogue signal pad (b)

Warning: The analogue signal pads contain only HBM protection diodes. If they are connected to input gates, the designer needs to include CDM protection network near to these gates as shown in Figure 4.6.

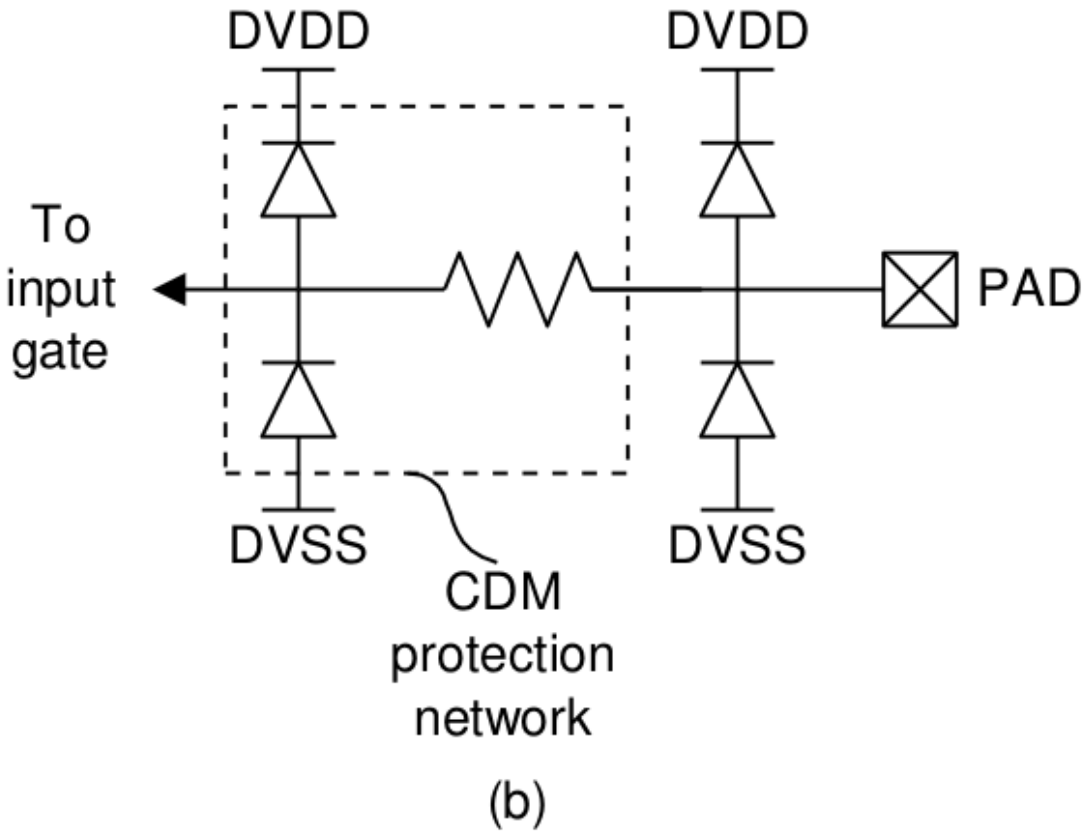

Figure 4.6 Illustration of CDM protection network that may be added to 5V analogue signal pad (b)

If these analog signal pads are used with internal circuit, the user must add their own secondary ESD protection adjacent to the devices of the internal circuit being protected. The perimeter of the CDM diode should be larger than 25µm. The CDM resistor should be larger than 50⊗ and should be realized using appropriate poly resistor.

4.6 Power supply pads and Corner pad

Each power supply pad, DVDD and DVSS has one ESD protection circuit inside. The leakage current of one ESD protection circuit is 648 nA maximum from simulation. Simulation conditions: FF corner, 5.5V at 125C.

Each corner pad has 2 ESD protection circuit inside. So total leakage current for each corner pad is 1296 nA maximum from simulation.

5.0 Specifications

Operating Conditions

Parameter	Min	Typ	Max	Unit
I/O DC Supply Voltage	4.5	5	5.5	V
Junction Temperature	-40	25	125	°C

ESD Protection

ESD Model	Target
Human Body Model (HBM)	2000V
Machine Model (MM)	200V
Charged Device Model (CDM)	500V

Latchup Immunity

Pads	Latch-up Testing Standard	Target
Digital and Analog I/O	JESD78B	+/- 100mA @ 25~125 C

Electrical Characteristics (DVDD = 4.50V to 5.50V, Temp = -40 degC to 125 degC)

Parameter	Condition	Symbol	Min	Max	Unit
Input Low Voltage		VIL	-0.3	0.8	V
Input High Voltage	Normal CMOS/TTL input	VIH	2	DVDD·	V
Input Low Voltage	Schmitt trigger Input	VIL	-0.3	0.8	V
Input High Voltage		V_IH	2	DVDD·	V
Hysteresis		V_HY	0.4	0.6	V
Input High Leakage Current	Vin = DVDD	IIH	-5	5	μA
Input Low Leakage Current	Vin = DVSS	IIL	-5	5	μA
Input Resistance with Pull-Down	Vin = DVDD	RPD	80	210	kΩ
Input Resistance with Pull-Up	Vin = DVSS	RPU	80	210	kΩ
Output Low Current	V_OL = 0.5V	IOL	4	-	mA
(DC drive strength of 4,8,12,16 or			8	-	mA
24mA only @ DVDD 4.5-5.5V)			12	-	mA
			16	-	mA
			24	-	mA
Output High Current	V_OH = DVDD-0.8V	I_OH	4	-	mA
(DC drive strength of 4,8,12,16 or			8	-	mA
24mA only @ DVDD 4.5-5.5V)			12	-	mA
			16	-	mA
			24	-	mA

Input Propagation Delay (DVDD = 4.50V to 5.50V, Temp = -40 degC to 125 degC)

Configuration	Input	Output	Transition	Cload	Min	Typ	Max	Unit
Input (CMOS)	PAD	Y	L to H	0.5pF	-	-	3	ns
	PAD	Y	H to L	0.5pF	-	-	3	ns
Input (Schmitt)	PAD	Y	L to H	0.5pF	-	-	3	ns
	PAD	Y	H to L	0.5pF	-	-	3	ns

Output Propagation Delay (DVDD = 4.50V to 5.50V, Temp = -40 degC to 125 degC)

Configuration	Input	Output	Transition	Cload	Min	Typ	Max	Unit
4mA Drive Strength At Slow Slew	A	PAD	L to H	30pF	-	-	12	ns
	A	PAD	H to L	30pF	-	-	12	ns
4mA Drive Strength At Fast Slew	A	PAD	L to H	30pF	-	-	11	ns
	A	PAD	H to L	30pF	-	-	11	ns
16mA Drive Strength At Slow Slew	A	PAD	L to H	30pF	-	-	10	ns
	A	PAD	H to L	30pF	-	-	10	ns
16mA Drive Strength At Fast Slew	A	PAD	L to H	30pF	-	-	7	ns
	A	PAD	H to L	30pF	-	-	7	ns
24mA Drive Strength At Slow Slew	A	PAD	L to H	50pF	-	-	10	ns
	A	PAD	H to L	50pF	-	-	10	ns
24mA Drive Strength At Fast Slew	A	PAD	L to H	50pF	-	-	7	ns
	A	PAD	H to L	50pF	-	-	7	ns

Characterization Corners

oProcess corner	DVDD(V)	Temperature(C)
SS	4.5	125
FF	5.5	-40
TT	5	25
FF*	5.5	125
SS	2.97	125
FF	3.63	-40
TT	3.3	25
FF*	3.63	125
SS	2.25	125
FF	2.75	-40
TT	2.5	25
FF*	2.75	125

Note: * worst case leakage current

3.2 SRAM

3.2.1 *gf180mcu_fd_ip_sram* - GlobalFoundries provided SRAM for GF180MCU process node

gf180mcu_fd_ip_sram__sram64x8m8wm1

gf180mcu_fd_ip_sram__sram64x8m8wm1

180nm 5V Green synchronous single port SRAM

Memory Macro IP

Datasheet

Features

- Uses 180nm 5V Green CMOS 13.5um2 6 transistors bitcell
- 64 words X 8 bits, mux 8 Instance
- Periphery circuitry uses 5V transistors
- Operating voltage is 1.62V to 5.50V
- Operating temperature is -40 degC to 125 degC
- Minimum 3 layers of metals required: Metal1, Metal2, Metal3
- Bit write mask
- Self timed operation to reduce power
- Separate data in and data out ports
- Macro cell name: gf180mcu_fd_ip_sram__sram64x8m8wm1

1.0 Pins Description

Signal	Direction	Description
CLK	Input	Clock for the memory. Rising edge triggers operation. All inputs are latched at rising edge of the clock signal
CEN	Input	Memory Enable, Active Low. When CEN is Low, the memory is enabled. When CEN input is High, the memory is deactivated but internal states are retained. CEN must be high before 1st running cycle.
A[6:(	Input	Address Input. This Address input port is used to address the location to be written during the write cycle and read during the read cycle.
GWE	Input	Write Enable Input. The RAM is in write cycle when GWEN is low. The RAM is in read cycle when GWEN is high.
WEN	Input	Bit Write Mask, Active Low. When the memory is in the write cycle, selectively write into individual outputs are controlled by WEN[7:0]. For example, if CEN, GWEN, WEN[0] are low and WEN[7:1] are high, only D[0] will write into the addressed location and D[7:1] will be ignored during CLK low to high transition.
D[7:(	Input	Data input bus. The data input bus is used to write data into the memory location specified by address input port during the write cycle.
Q[7:(	output	Data output bus. It outputs the contents of the memory location addressed by the Address Input signals.
VDD	Powe	Power pin.
VSS	Grou	Ground pin.

2.0 Truth Table

CLK	CEN	GWEN	WEN	A	D	Q	status
	H	X	X	X	X	Hold previous data	Standby mode
	L	H	X	A	X	Q	Read mode
	L	L	H	A	D	Hold previous data	Write mode
	L	L	L	A	D	Hold previous data	Mask mode
other	X	X	X	X	X	Hold previous data	Unchanged

Note: X: don't care

3.0 Capacitance loading (fF) @ TT, 25°c

Voltage	CLK	CEN	GWEN	WEN	A	D
5.0v	296.201	17.6988	49.6735	7.84667	34.5188	16.5528
3.3v	291.776	17.7783	48.1872	7.64901	34.5983	16.4468
1.8v	280.919	17.7614	44.4991	7.15847	34.5814	16.1834

4.0 Power Consumption (uW)

Condition of AC Write power is all data input pins switch and AC Read power is all address input and data output pins switch at 1MHz

4.1 5.0V Power

Condition	DC standby	AC Write	AC Read
TT corner, 5.00v, 25°c	0.00013	859.2	770.85
SS corner, 4.50v, -40°c	0.00011	670.77	603.675
SS corner, 4.50v, 125°c	0.00014	701.798	630.697
FF corner, 5.50v, 125°c	0.00946	1103.25	991.21
FF corner, 5.50v, -40°c	0.00016	1046.15	940.445

4.2 3.3V Power

Condition	DC standby	AC Write	AC Read
TT corner, 3.3v, 25°c	0.00006	342.144	310.2
SS corner, 3.0v, -40°c	0.00005	273.045	249.09
SS corner, 3.6v, 125°c	0.00006	289.68	263.76
FF corner, 3.6v, 125°c	0.0037	441.252	395.91
FF corner, 3.6v, -40°c	0.00007	409.23	368.748

4.3 1.8V Power

Condition	DC standby	AC Write	AC Read
TT corner, 1.8v, 25°c	0.00002	92.043	84.3399
SS corner, 1.62v, -40°c	0.00001	72.2552	67.2535
SS corner, 1.62v, 125°c	0.00002	77.4279	71.1626
FF corner, 1.98v, 125°c	0.0012	120.582	108.841
FF corner,1.98v, -40°c	0.00002	110.484	100.495

5.0 AC Characteristics

The timing and power values measured from the input slew of 20ps on clock pin, 20ps on signal and output load .01pF.

5.1 5.0V AC Characteristics

Symbol	Parameter Description	SNSP Process 4.5v, -40C	SNSP Process 4.5v, 125C	Typical Process 5.0v, 25C	FNFP Process 5.5v, 125C	FNFP Process 5.5v, -40C	unit
Tcyc	Min clock period	7.1094	10.2796	5.7473	5.3301	3.7332	ns
Tckh	Min clock high time	3.2696	3.9625	2.2315	2.3664	1.4138	ns
Tckl	Min clock low time	2.723	4.8463	2.5397	2.4258	1.355	ns
Tcsl	CEN set up time (CEN = L)	0.4573	0.5866	0.4058	0.3883	0.3234	ns
Tchl	CEN hold time (CEN = L)	1.2309	1.8505	1.1082	1.0785	0.764	ns
Tcsh	CEN set up time (CEN = H)	0.514	0.6623	0.4352	0.4114	0.3381	ns
Tchh	CEN hold time (CEN = H)	1.2875	1.9179	1.1376	1.1016	0.7788	ns
Twsl	GWEN set up time (GWEN = L)	0.719	1.015	0.63	0.5885	0.4551	ns
Twhl	GWEN hold time (GWEN = L)	0.9841	1.3576	0.8289	0.7912	0.5933	ns
Twsh	GWEN set up time (GWEN = H)	0.6762	0.9362	0.592	0.563	0.4351	ns
Twhh	GWEN hold time (GWEN = H)	0.5182	0.6761	0.456	0.4575	0.3629	ns
Twisl	WEN set up time (WEN = L)	0.2931	0.3655	0.2719	0.244	0.2246	ns
Twihl	WEN hold time (WEN = L)	0.9867	1.3576	0.8289	0.7912	0.5933	ns
Twish	WEN set up time (WEN = H)	0	0	0	0	0	ns
Twihl	WEN hold time (WEN = H)	0.5225	0.6786	0.4561	0.4575	0.3629	ns
Tasl	A set up time (A = L)	0.8445	1.095	0.7027	0.6325	0.5165	ns
Tahl	A hold time (A = L)	0.6188	0.7925	0.5272	0.492	0.4005	ns
Tash	A set up time (A = H)	0.6391	0.8833	0.537	0.4936	0.3872	ns
Tahh	A hold time (A = H)	0.6421	0.8303	0.5416	0.5018	0.406	ns
Tdsl	D set up time (D = L)	0.1233	0.1049	0.1234	0.1046	0.1296	ns
Tdhl	D hold time (D = L)	0.5086	0.6605	0.4518	0.4675	0.3608	ns
Tdsh	D set up time (D = H)	0.6006	0.7833	0.4892	0.4136	0.3622	ns
Tdhh	D hold time (D= H)	0.7431	1.0139	0.6432	0.6316	0.4818	ns
Tah	Clock high to Q high	5.2963	7.7968	4.339	4.0561	2.7985	ns
Tal	Clock high to Q low	5.4809	8.0592	4.4822	4.1672	2.8862	ns

5.2 3.3V AC Characteristics

Symbol	Parameter description	SNSP Process 3.0v, -40C	SNSP Process 3.0, 125C	Typical Process 3.3v, 25C	FNFP Process 3.6v, 125C	FNFP Process 3.6v, -40C	unit
Tcyc	Min clock period	11.0881	16.3302	8.2602	7.1405	4.8003	ns
Tckh	Min clock high time	5.2766	4.546	2.6935	3.4945	2.3063	ns
Tckl	Min clock low time	4.0239	7.031	3.0279	3.1873	2.0473	ns
Tcsl	CEN set up time (CEN = L)	0.6574	0.8496	0.5408	0.497	0.4055	ns
Tchl	CEN hold time (CEN = L)	1.8972	2.8488	1.5921	1.4759	1.0202	ns
Tcsh	CEN set up time (CEN = H)	0.8078	1.078	0.6156	0.5383	0.4256	ns
Tchh	CEN hold time (CEN = H)	2.0022	2.9741	1.6413	1.5021	1.0371	ns
Twsl	GWEN set up time (GWEN = L)	1.1603	1.6477	0.9192	0.8133	0.601	ns
Twhl	GWEN hold time (GWEN = L)	1.426	2.0375	1.1276	1.0157	0.7499	ns
Twsh	GWEN set up time (GWEN = H)	1.0297	1.4308	0.8248	0.742	0.5575	ns
Twhh	GWEN hold time (GWEN = H)	0.6921	0.962	0.5782	0.5566	0.4374	ns
Twisl	WEN set up time (WEN = L)	0.4664	0.5547	0.3886	0.337	0.2926	ns
Twih	WEN hold time (WEN = L)	1.4269	2.0375	1.1276	1.016	0.7505	ns
Twisl	WEN set up time (WEN = H)	0	0	0	0	0	ns
Twih	WEN hold time (WEN = H)	0.6944	0.962	0.5789	0.5566	0.4374	ns
Tasl	A set up time (A = L)	1.2506	1.5795	0.9573	0.8183	0.6528	ns
Tahl	A hold time (A = L)	0.8435	1.1028	0.6808	0.6072	0.4906	ns
Tash	A set up time (A = H)	1.0439	1.3746	0.7931	0.6787	0.5232	ns
Tahh	A hold time (A = H)	0.9133	1.1999	0.7195	0.6323	0.5058	ns
Tdsl	D set up time (D = L)	0.182	0.1272	0.1649	0.1445	0.1652	ns
Tdhl	D hold time (D = L)	0.5964	0.8295	0.5427	0.5413	0.421	ns
Tdsh	D set up time (D = H)	1.0245	1.2872	0.7225	0.5774	0.4764	ns
Tdhh	D hold time (D= H)	1.0708	1.5056	0.8569	0.7908	0.5979	ns

5.3 1.8V AC Characteristics

Sym-bol	Parameter description	SNSP Process 1.62v, -40C	SNSP Process 1.62v, 125C	Typical Process 1.8v, 25C	FNFP Process 1.98v, 125C	FNFP Process 1.98v, -40C	unit
Tcyc	Min clock period	46.9428	50.9738	21.4387	13.8797	10.1117	ns
Tckh	Min clock high time	17.8048	12.4148	5.5918	3.916	4.9481	ns
Tckl	Min clock low time	20.3458	23.4901	9.3467	5.9066	4.7369	ns
Tcsl	CEN set up time (CEN = L)	2.3723	2.4627	1.1531	0.8039	0.6538	ns
Tchl	CEN hold time (CEN = L)	7.2625	8.1371	3.8299	2.7467	2.0012	ns
Tcsh	CEN set up time (CEN = H)	3.5906	3.6093	1.5645	0.973	0.7991	ns
Tchh	CEN hold time (CEN = H)	8.1157	8.8493	4.0493	2.806	2.0585	ns
Twsl	GWEN set up time (GWEN = L)	5.437	5.6091	2.4169	1.5313	1.1881	ns
Twhl	GWEN hold time (GWEN = L)	6.4375	6.9235	2.5611	1.7504	1.3035	ns
Twsh	GWEN set up time (GWEN = H)	3.7804	4.1608	1.8848	1.2969	1.004	ns
Twhh	GWEN hold time (GWEN = H)	3.7001	3.9258	1.2605	0.8555	0.6691	ns
Twisl	WEN set up time (WEN = L)	0.089	0.1242	0.7187	0.566	0.5008	ns
Twihl	WEN hold time (WEN = L)	6.47	6.9448	2.572	1.7504	1.3079	ns
Twish	WEN set up time (WEN = H)	0	0	0	0	0	ns
Twihl	WEN hold time (WEN = H)	3.7346	3.9386	1.2609	0.8555	0.6691	ns
Tasl	A set up time (A = L)	2.7499	2.7972	1.9241	1.362	1.1243	ns
Tahl	A hold time (A = L)	2.3664	2.566	1.276	0.938	0.7583	ns
Tash	A set up time (A = H)	3.4976	3.5401	1.811	1.2267	1.0163	ns
Tahh	A hold time (A = H)	2.9875	3.1533	1.4855	1.0268	0.8386	ns
Tdsl	D set up time (D = L)	0	0	0.0245	0.1435	0.1899	ns
Tdhl	D hold time (D = L)	2.9813	3.0888	0.9452	0.7355	0.5491	ns
Tdsh	D set up time (D = H)	3.4777	3.3172	1.841	1.061	0.9368	ns
Tdhh	D hold time (D= H)	5.6811	5.9063	2.0886	1.3397	1.0391	ns
Tah	Clock high to Q high	32.2344	35.5512	15.2892	10.1268	7.4477	ns
Tal	Clock high to Q low	34.7448	37.83	16.1808	10.5967	7.8205	ns

AC Timing Waveform Chart

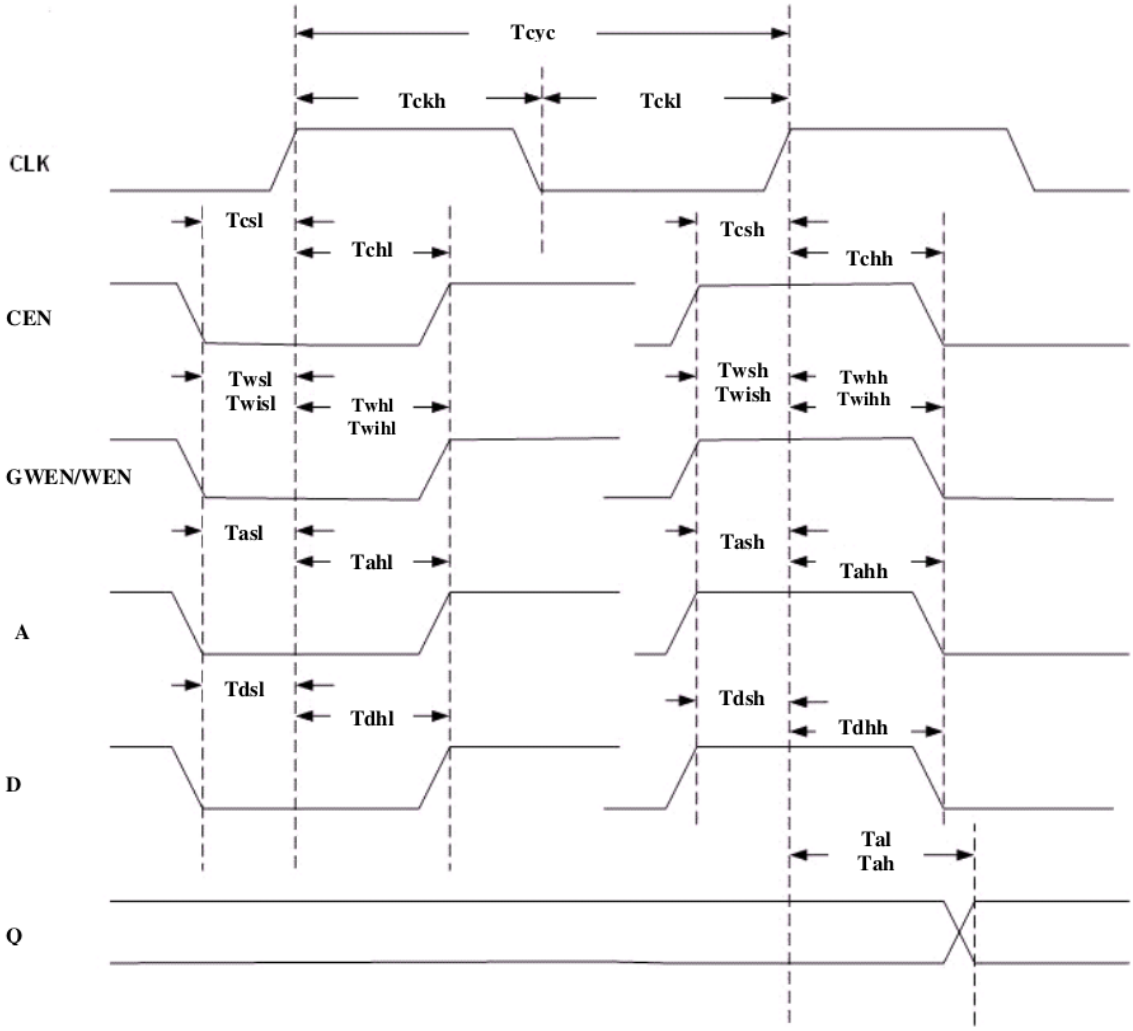

6.0 Physical Dimensions

Width(um)	Height(um)	Area(um^2)
431.86	232.88	100571.5568

gf180mcu_fd_ip_sram__sram128x8m8wm1

gf180mcu_fd_ip_sram__sram128x8m8wm1

180nm 5V Green synchronous single port SRAM

Memory Macro IP

Datasheet

Features

- Uses 180nm 5V Green CMOS 13.5um2 6 transistors bitcell
- 128 words X 8 bits, mux 8 Instance
- Periphery circuitry uses 5V transistors
- Operating voltage is 1.62V to 5.50V
- Operating temperature is -40 degC to 125 degC
- Minimum 3 layers of metals required: Metal1, Metal2, Metal3
- Bit write mask
- Self timed operation to reduce power
- Separate data in and data out ports
- Macro cell name: gf180mcu_fd_ip_sram__sram128x8m8wm1

1.0 Pins Description

Signal	Direction	Description
CLK	Input	Clock for the memory. Rising edge triggers operation. All inputs are latched at rising edge of the clock signal
CEN	Input	Memory Enable, Active Low. When CEN is Low, the memory is enabled. When CEN input is High, the memory is deactivated but internal states are retained. CEN must be high before 1st running cycle.
A[6:(	Input	Address Input. This Address input port is used to address the location to be written during the write cycle and read during the read cycle.
GWE	Input	Write Enable Input. The RAM is in write cycle when GWEN is low. The RAM is in read cycle when GWEN is high.
WEN	Input	Bit Write Mask, Active Low. When the memory is in the write cycle, selectively write into individual outputs are controlled by WEN[7:0]. For example, if CEN, GWEN, WEN[0] are low and WEN[7:1] are high, only D[0] will write into the addressed location and D[7:1] will be ignored during CLK low to high transition.
D[7:(	Input	Data input bus. The data input bus is used to write data into the memory location specified by address input port during the write cycle.
Q[7:(	output	Data output bus. It outputs the contents of the memory location addressed by the Address Input signals.
VDD	Powe	Power pin.
VSS	Grou	Ground pin.

2.0 Truth Table

CLK	CEN	GWEN	WEN	A	D	Q	status
	H	X	X	X	X	Hold previous data	Standby mode
	L	H	X	A	X	Q	Read mode
	L	L	H	A	D	Hold previous data	Write mode
	L	L	L	A	D	Hold previous data	Mask mode
other	X	X	X	X	X	Hold previous data	Unchanged

Note: X: don't care

3.0 Capacitance loading (fF) @ TT, 25°c

Voltage	CLK	CEN	GWEN	WEN	A	D
5.0v	298.116	17.4878	49.6559	7.84667	38.8545	16.7359
3.3v	293.691	17.5673	48.1696	7.649	38.934	16.7013
1.8v	282.833	17.5504	44.4816	7.15846	38.9171	16.0438

4.0 Power Consumption (uW)

Condition of AC Write power is all data input pins switch and AC Read power is all address input and data output pins switch at 1MHz

4.1 5.0V Power

Condition	DC standby	AC Write	AC Read
TT corner, 5.00v, 25°c	0.0002	897.5	805.25
SS corner, 4.50v, -40°c	0.00016	702.945	632.295
SS corner, 4.50v, 125°c	0.00021	731.97	662.018
FF corner, 5.50v, 125°c	0.01252	1146.72	1036.97
FF corner, 5.50v, -40°c	0.00024	1091.34	983.758

4.2 3.3V Power

Condition	DC standby	AC Write	AC Read
TT corner, 3.3v, 25°c	0.00009	357.571	324.472
SS corner, 3.0v, -40°c	0.00007	284.31	262.08
SS corner, 3.6v, 125°c	0.0001	303.885	276.39
FF corner, 3.6v, 125°c	0.00491	460.764	413.478
FF corner, 3.6v, -40°c	0.0001	427.68	386.604

4.3 1.8V Power

Condition	DC standby	AC Write	AC Read
TT corner, 1.8v, 25°c	0.00003	96.498	88.7733
SS corner, 1.62v, -40°c	0.00002	76.3255	70.9123
SS corner, 1.62v, 125°c	0.00003	81.5346	74.767
FF corner, 1.98v, 125°c	0.00159	125.948	114.038
FF corner,1.98v, -40°c	0.00003	115.503	105.088

5.0 AC Characteristics

The timing and power values measured from the input slew of 20ps on clock pin, 20ps on signal and output load .01pF.

5.1 5.0V AC Characteristics

Symbol	Parameter Description	SNSP Process 4.5v, -40C	SNSP Process 4.5v, 125C	Typical Process 5.0v, 25C	FNFP Process 5.5v, 125C	FNFP Process 5.5v, -40C	unit
Tcyc	Min clock period	7.2968	10.5483	5.8805	5.4403	3.8099	ns
Tckh	Min clock high time	2.557	4.5174	2.2464	2.1763	1.411	ns
Tckl	Min clock low time	2.5652	4.5311	2.3734	2.3048	1.3029	ns
Tcsl	CEN set up time (CEN = L)	0.459	0.5874	0.4066	0.3895	0.3233	ns
Tchl	CEN hold time (CEN = L)	1.2324	1.8522	1.1095	1.0791	0.7647	ns
Tcsh	CEN set up time (CEN = H)	0.5119	0.6595	0.4349	0.411	0.3372	ns
Tchh	CEN hold time (CEN = H)	1.2853	1.9179	1.1378	1.1006	0.7786	ns
Twsl	GWEN set up time (GWEN = L)	0.7164	1.014	0.6277	0.5876	0.4544	ns
Twhl	GWEN hold time (GWEN = L)	0.9936	1.3718	0.8367	0.7948	0.5965	ns
Twsh	GWEN set up time (GWEN = H)	0.6741	0.9339	0.5892	0.5612	0.4344	ns
Twhh	GWEN hold time (GWEN = H)	0.5303	0.6896	0.4644	0.4611	0.3654	ns
Twisl	WEN set up time (WEN = L)	0.2801	0.3526	0.2642	0.2408	0.2218	ns
Twihl	WEN hold time (WEN = L)	0.9957	1.3718	0.8367	0.7948	0.5965	ns
Twish	WEN set up time (WEN = H)	0	0	0	0	0	ns
Twihh	WEN hold time (WEN = H)	0.5303	0.6924	0.4646	0.4611	0.3654	ns
Tasl	A set up time	0.8834	1.1569	0.7313	0.6558	0.5337	ns

5.2 3.3V AC Characteristics

Symbol	Parameter description	SNSP Process 3.0v, -40C	SNSP Process 3.0, 125C	Typical Process 3.3v, 25C	FNFP Process 3.6v, 125C	FNFP Process 3.6v, -40C	unit
Tcyc	Min clock period	11.287	16.6365	8.4053	7.2375	4.8961	ns
Tckh	Min clock high time	3.6774	4.7153	2.7639	2.5493	2.4443	ns
Tckl	Min clock low time	4.4364	5.9546	2.8652	3.328	1.9857	ns
Tcsl	CEN set up time (CEN = L)	0.6575	0.8523	0.5421	0.4968	0.4053	ns
Tchl	CEN hold time (CEN = L)	1.9064	2.8563	1.594	1.4782	1.0188	ns
Tcsh	CEN set up time (CEN = H)	0.8066	1.0749	0.6133	0.5368	0.4259	ns
Tchh	CEN hold time (CEN = H)	2.0101	2.9791	1.6398	1.5029	1.0368	ns
Twsl	GWEN set up time (GWEN = L)	1.1592	1.6428	0.9199	0.8121	0.5999	ns
Twhl	GWEN hold time (GWEN = L)	1.4433	2.0627	1.138	1.024	0.7538	ns
Twsh	GWEN set up time (GWEN = H)	1.0287	1.4302	0.8238	0.742	0.557	ns
Twhh	GWEN hold time (GWEN = H)	0.7157	0.9902	0.592	0.5628	0.4407	ns
Twisl	WEN set up time (WEN = L)	0.441	0.5252	0.3732	0.3322	0.287	ns
Twihl	WEN hold time (WEN = L)	1.4443	2.0643	1.138	1.024	0.7538	ns
Twish	WEN set up time (WEN = H)	0	0	0	0	0	ns

5.3 1.8V AC Characteristics

Symbol	Parameter description	SNSP Process 1.62v, -40C	SNSP Process 1.62v, 125C	Typical Process 1.8v, 25C	FNFP Process 1.98v, 125C	FNFP Process 1.98v, -40C	unit
Tcyc	Min clock period	48.0305	51.9626	21.8315	14.0727	10.2767	ns
Tckh	Min clock high time	21.8197	13.4605	10.6663	3.7733	2.6968	ns
Tckl	Min clock low time	22.5675	21.362	10.6844	5.1485	3.7226	ns
Tcsl	CEN set up time (CEN = L)	2.3724	2.4562	1.1519	0.8005	0.6534	ns
Tchl	CEN hold time (CEN = L)	7.2717	8.1123	3.8274	2.746	2.0001	ns
Tcsh	CEN set up time (CEN = H)	3.5899	3.621	1.5559	0.9713	0.7968	ns
Tchh	CEN hold time (CEN = H)	8.1139	8.8496	4.0504	2.8068	2.0571	ns
Twsl	GWEN set up time (GWEN = L)	5.4203	5.5914	2.4142	1.5341	1.1897	ns
Twhl	GWEN hold time (GWEN = L)	6.5279	7.0068	2.5795	1.764	1.3151	ns
Twsh	GWEN set up time (GWEN = H)	3.7875	4.1574	1.8835	1.3011	1.0048	ns
Twhh	GWEN hold time (GWEN = H)	3.7942	4.0118	1.2881	0.8686	0.6835	ns
Twisl	WEN set up time (WEN = L)	0	0.0413	0.6956	0.5569	0.4878	ns
Twihl	WEN hold time (WEN = L)	6.5574	7.0283	2.5901	1.764	1.3173	ns
Twish	WEN set up time (WEN = H)	0	0	0	0	0	ns
Twihh	WEN hold time (WEN = H)	3.8062	4.024	1.2894	0.8686	0.6835	ns
Tasl	A set up time	2.7688	2.9848	2.0331	1.4547	1.1882	ns

AC Timing Waveform Chart

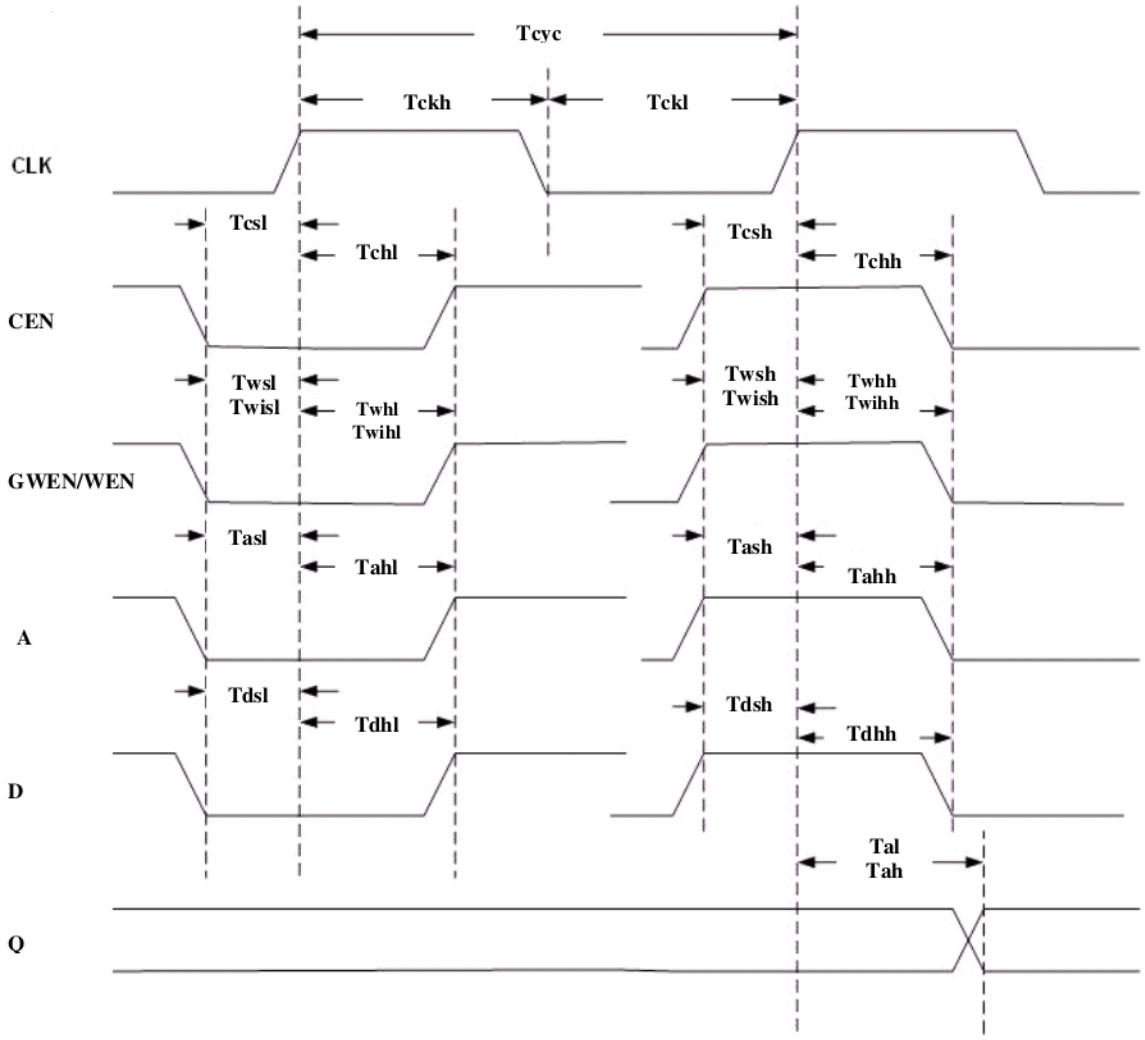

6.0 Physical Dimensions

Width(um)	Height(um)	Area(um^2)
431.86	268.88	116118.5168

gf180mcu_fd_ip_sram__sram256x8m8wm1

gf180mcu_fd_ip_sram__sram256x8m8wm1

180nm 5V Green synchronous single port SRAM

Memory Macro IP

Datasheet

Features

- Uses 180nm 5V Green CMOS 13.5um2 6 transistors bitcell
- 256 words X 8 bits, mux 8 Instance
- Periphery circuitry uses 5V transistors
- Operating voltage is 1.62V to 5.50V
- Operating temperature is -40 degC to 125 degC
- Minimum 3 layers of metals required: Metal1, Metal2, Metal3
- Bit write mask
- Self timed operation to reduce power
- Separate data in and data out ports
- Macro cell name: gf180mcu_fd_ip_sram__sram256x8m8wm1

1.0 Pins Description

Signal	Direction	Description
CLK	Input	Clock for the memory. Rising edge triggers operation. All inputs are latched at rising edge of the clock signal
CEN	Input	Memory Enable, Active Low. When CEN is Low, the memory is enabled. When CEN input is High, the memory is deactivated but internal states are retained. CEN must be high before 1st running cycle.
A[6:(	Input	Address Input. This Address input port is used to address the location to be written during the write cycle and read during the read cycle.
GWE	Input	Write Enable Input. The RAM is in write cycle when GWEN is low. The RAM is in read cycle when GWEN is high.
WEN	Input	Bit Write Mask, Active Low. When the memory is in the write cycle, selectively write into individual outputs are controlled by WEN[7:0]. For example, if CEN, GWEN, WEN[0] are low and WEN[7:1] are high, only D[0] will write into the addressed location and D[7:1] will be ignored during CLK low to high transition.
D[7:(	Input	Data input bus. The data input bus is used to write data into the memory location specified by address input port during the write cycle.
Q[7:(	output	Data output bus. It outputs the contents of the memory location addressed by the Address Input signals.
VDD	Powe	Power pin.
VSS	Grou	Ground pin.

2.0 Truth Table

CLK	CEN	GWEN	WEN	A	D	Q	status
	H	X	X	X	X	Hold previous data	Standby mode
	L	H	X	A	X	Q	Read mode
	L	L	H	A	D	Hold previous data	Write mode
	L	L	L	A	D	Hold previous data	Mask mode
other	X	X	X	X	X	Hold previous data	Unchanged

Note: X: don't care

3.0 Capacitance loading (fF) @ TT, 25°c

Voltage	CLK	CEN	GWEN	WEN	A	D
5.0v	298.056	18.2857	49.4975	7.84667	40.4163	16.4131
3.3v	293.631	18.3651	48.0112	7.649	40.4958	16.3071
1.8v	282.773	18.3483	44.3232	7.15846	40.4789	16.0437

4.0 Power Consumption (uW)

Condition of AC Write power is all data input pins switch and AC Read power is all address input and data output pins switch at 1MHz

4.1 5.0V Power

Condition	DC standby	AC Write	AC Read
TT corner, 5.00v, 25°c	0.00034	939.625	841.225
SS corner, 4.50v, -40°c	0.00028	735.458	662.67
SS corner, 4.50v, 125°c	0.00034	761.49	693.63
FF corner, 5.50v, 125°c	0.01866	1195.51	1079.29
FF corner, 5.50v, -40°c	0.00041	1140.56	1025.26

4.2 3.3V Power

Condition	DC standby	AC Write	AC Read
TT corner, 3.3v, 25°c	0.00015	375.012	338.663
SS corner, 3.0v, -40°c	0.00012	300.42	275.565
SS corner, 3.6v, 125°c	0.00016	318.3	288.78
FF corner, 3.6v, 125°c	0.00732	478.296	430.812
FF corner, 3.6v, -40°c	0.00018	446.67	403.308

4.3 1.8V Power

Condition	DC standby	AC Write	AC Read
TT corner, 1.8v, 25°c	0.00004	102.006	93.51
SS corner, 1.62v, -40°c	0.00004	81.2349	75.087
SS corner, 1.62v, 125°c	0.00005	86.0949	79.1103
FF corner, 1.98v, 125°c	0.00236	130.858	119.087
FF corner,1.98v, -40°c	0.00005	120.602	110.454

5.0 AC Characteristics

The timing and power values measured from the input slew of 20ps on clock pin, 20ps on signal and output load .01pF.

5.1 5.0V AC Characteristics

Symbol	Parameter Description	SNSP Process 4.5v, -40C	SNSP Process 4.5v, 125C	Typical Process 5.0v, 25C	FNFP Process 5.5v, 125C	FNFP Process 5.5v, -40C	unit
Tcyc	Min clock period	7.5946	11	6.1181	5.6608	3.957	ns
Tckh	Min clock high time	3.3401	5.4009	2.6907	2.0829	1.4546	ns
Tckl	Min clock low time	3.5036	4.9693	2.6661	1.9737	1.5862	ns
Tcsl	CEN set up time (CEN = L)	0.4584	0.5869	0.406	0.3883	0.3228	ns
Tchl	CEN hold time (CEN = L)	1.2328	1.8527	1.1081	1.0768	0.7655	ns
Tcsh	CEN set up time (CEN = H)	0.5124	0.6616	0.435	0.411	0.3369	ns
Tchh	CEN hold time (CEN = H)	1.2868	1.9188	1.1371	1.0995	0.7797	ns
Twsl	GWEN set up time (GWEN = L)	0.718	1.0143	0.6281	0.5888	0.4541	ns
Twhl	GWEN hold time (GWEN = L)	1.0062	1.3936	0.8467	0.8056	0.6051	ns
Twsh	GWEN set up time (GWEN = H)	0.6753	0.9358	0.5903	0.5619	0.4329	ns
Twhh	GWEN hold time (GWEN = H)	0.5421	0.712	0.4752	0.4717	0.3744	ns
Twisl	WEN set up time (WEN = L)	0.2681	0.3326	0.2552	0.2318	0.2132	ns
Twihl	WEN hold time (WEN = L)	1.0093	1.3936	0.8467	0.8056	0.6051	ns
Twish	WEN set up time (WEN = H)	0	0	0	0	0	ns
Twihh	WEN hold time (WEN = H)	0.5428	0.7142	0.4752	0.4717	0.3744	ns
Tasl	A set up time (A = L)	0.8176	1.0609	0.6825	0.6069	0.4999	ns
Tahl	A hold time (A = L)	0.6347	0.8154	0.5351	0.4936	0.4026	ns
Tash	A set up time (A = H)	0.6116	0.8236	0.5149	0.4745	0.3738	ns
Tahh	A hold time (A = H)	0.6556	0.8491	0.5475	0.5017	0.4073	ns
Tdsl	D set up time (D = L)	0.1068	0.0793	0.1079	0.0931	0.1215	ns
Tdhl	D hold time (D = L)	0.5319	0.6948	0.4699	0.4799	0.3698	ns
Tdsh	D set up time (D = H)	0.5818	0.7537	0.4744	0.4028	0.3544	ns
Tdhh	D hold time (D= H)	0.7624	1.0445	0.659	0.6446	0.491	ns
Tah	Clock high to Q high	5.5913	8.2512	4.5692	4.2569	2.9344	ns
Tal	Clock high to Q low	5.7745	8.5132	4.7158	4.3699	3.025	ns

5.2 3.3V AC Characteristics

Symbol	Parameter description	SNSP Process 3.0v, -40C	SNSP Process 3.0, 125C	Typical Process 3.3v, 25C	FNFP Process 3.6v, 125C	FNFP Process 3.6v, -40C	unit
Tcyc	Min clock period	11.6044	17.0863	8.5597	7.3978	5.1007	ns
Tckh	Min clock high time	4.1518	5.1878	3.2873	2.8975	1.8998	ns
Tckl	Min clock low time	4.2752	6.2768	3.891	2.9738	1.8573	ns
Tcsl	CEN set up time (CEN = L)	0.6591	0.8517	0.542	0.4951	0.4047	ns
Tchl	CEN hold time (CEN = L)	1.9054	2.849	1.592	1.4784	1.0184	ns
Tcsh	CEN set up time (CEN = H)	0.8058	1.0775	0.6175	0.5341	0.4262	ns
Tchh	CEN hold time (CEN = H)	2.0065	2.9742	1.64	1.5046	1.0375	ns
Twsl	GWEN set up time (GWEN = L)	1.1586	1.6455	0.9198	0.8113	0.6012	ns
Twhl	GWEN hold time (GWEN = L)	1.4693	2.0948	1.1528	1.039	0.7639	ns
Twsh	GWEN set up time (GWEN = H)	1.0285	1.4295	0.8241	0.741	0.5578	ns
Twhh	GWEN hold time (GWEN = H)	0.7347	1.0252	0.6061	0.5779	0.4516	ns
Twisl	WEN set up time (WEN = L)	0.4276	0.4945	0.36	0.3185	0.2767	ns
Twih	WEN hold time (WEN = L)	1.47	2.0958	1.1533	1.039	0.7639	ns
Twisl	WEN set up time (WEN = H)	0	0	0	0	0	ns
Twih	WEN hold time (WEN = H)	0.7364	1.0252	0.6064	0.5779	0.4516	ns
Tasl	A set up time (A = L)	1.2239	1.5436	0.9321	0.793	0.634	ns
Tahl	A hold time (A = L)	0.883	1.1501	0.6944	0.6117	0.4942	ns
Tash	A set up time (A = H)	0.9765	1.2625	0.7394	0.6387	0.497	ns
Tahh	A hold time (A = H)	0.9455	1.2363	0.7301	0.6353	0.5077	ns
Tdsl	D set up time (D = L)	0.151	0.0675	0.1406	0.1223	0.1528	ns
Tdhl	D hold time (D = L)	0.6331	0.8795	0.5685	0.56	0.4337	ns
Tdsh	D set up time (D = H)	0.9896	1.2399	0.694	0.5587	0.4635	ns
Tdhh	D hold time (D= H)	1.1116	1.5609	0.8826	0.8138	0.6107	ns

5.3 1.8V AC Characteristics

Symbol	Parameter description	SNSP Process 1.62v, -40C	SNSP Process 1.62v, 125C	Typical Process 1.8v, 25C	FNFP Process 1.98v, 125C	FNFP Process 1.98v, -40C	unit
Tcyc	Min clock period	49.6236	53.6235	22.4703	14.439	10.5548	ns
Tckh	Min clock high time	18.4434	25.7785	10.9148	3.8319	4.6646	ns
Tckl	Min clock low time	24.2445	20.8014	10.2887	5.3502	4.7431	ns
Tcsl	CEN set up time (CEN = L)	2.3681	2.4651	1.1518	0.7912	0.6521	ns
Tchl	CEN hold time (CEN = L)	7.2637	8.1415	3.8285	2.745	1.9932	ns
Tcsh	CEN set up time (CEN = H)	3.5818	3.6043	1.5568	0.9701	0.7982	ns
Tchh	CEN hold time (CEN = H)	8.1245	8.8521	4.0462	2.8098	2.0519	ns
Twsl	GWEN set up time (GWEN = L)	5.3918	5.595	2.4131	1.5312	1.1886	ns
Twhl	GWEN hold time (GWEN = L)	6.6902	7.1843	2.641	1.7922	1.3425	ns
Twsh	GWEN set up time (GWEN = H)	3.788	4.1484	1.8898	1.3037	1.0054	ns
Twhh	GWEN hold time (GWEN = H)	3.9825	4.2086	1.3454	0.9058	0.7109	ns
Twisl	WEN set up time (WEN = L)	0	0	0.635	0.5269	0.4594	ns
Twihl	WEN hold time (WEN = L)	6.7241	7.2059	2.6513	1.7922	1.345	ns
Twish	WEN set up time (WEN = H)	0	0	0	0	0	ns
Twihl	WEN hold time (WEN = H)	3.9825	4.2086	1.3498	0.9058	0.7109	ns
Tasl	A set up time (A = L)	2.5026	2.5937	1.8544	1.345	1.102	ns
Tahl	A hold time (A = L)	2.4783	2.6941	1.3189	0.9519	0.7682	ns
Tash	A set up time (A = H)	3.5235	3.5752	1.5839	1.1347	0.92	ns
Tahh	A hold time (A = H)	3.0774	3.2544	1.517	1.0314	0.8371	ns
Tdsl	D set up time (D = L)	0	0	0	0.1068	0.1609	ns
Tdhl	D hold time (D = L)	3.233	3.3177	1.0226	0.7713	0.5799	ns
Tdsh	D set up time (D = H)	3.2797	3.1593	1.7976	1.0285	0.9057	ns
Tdhh	D hold time (D= H)	5.9233	6.148	2.1673	1.38	1.0712	ns
Tah	Clock high to Q high	34.2708	37.734	16.1892	10.6138	7.8157	ns
Tal	Clock high to Q low	36.8388	39.9912	17.106	11.0951	8.1864	ns

AC Timing Waveform Chart

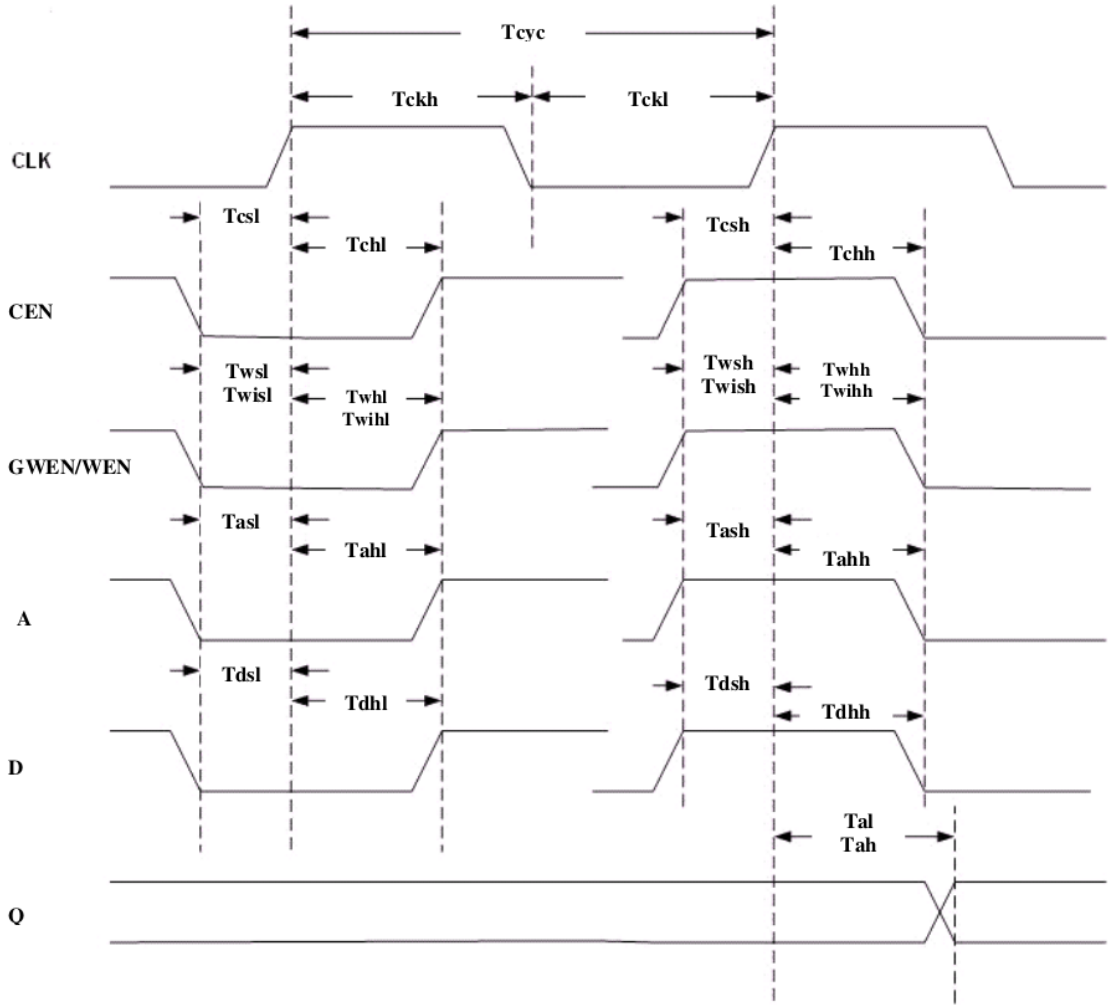

6.0 Physical Dimensions

Width(um)	Height(um)	Area(um^2)
431.86	340.88	147212.4368

gf180mcu_fd_ip_sram__sram512x8m8wm1

gf180mcu_fd_ip_sram__sram512x8m8wm1

180nm 5V Green synchronous single port SRAM

Memory Macro IP

Datasheet

Features

- Uses 180nm 5V Green CMOS 13.5um2 6 transistors bitcell
- 512 words X 8 bits, mux 8 Instance
- Periphery circuitry uses 5V transistors
- Operating voltage is 1.62V to 5.50V
- Operating temperature is -40 degC to 125 degC
- Minimum 3 layers of metals required: Metal1, Metal2, Metal3
- Bit write mask
- Self timed operation to reduce power
- Separate data in and data out ports
- Macro cell name: gf180mcu_fd_ip_sram__sram512x8m8wm1

1.0 Pins Description

Signal	Direction	Description
CLK	Input	Clock for the memory. Rising edge triggers operation. All inputs are latched at rising edge of the clock signal
CEN	Input	Memory Enable, Active Low. When CEN is Low, the memory is enabled. When CEN input is High, the memory is deactivated but internal states are retained. CEN must be high before 1st running cycle.
A[6:(	Input	Address Input. This Address input port is used to address the location to be written during the write cycle and read during the read cycle.
GWE	Input	Write Enable Input. The RAM is in write cycle when GWEN is low. The RAM is in read cycle when GWEN is high.
WEN	Input	Bit Write Mask, Active Low. When the memory is in the write cycle, selectively write into individual outputs are controlled by WEN[7:0]. For example, if CEN, GWEN, WEN[0] are low and WEN[7:1] are high, only D[0] will write into the addressed location and D[7:1] will be ignored during CLK low to high transition.
D[7:(	Input	Data input bus. The data input bus is used to write data into the memory location specified by address input port during the write cycle.
Q[7:(	output	Data output bus. It outputs the contents of the memory location addressed by the Address Input signals.
VDD	Powe	Power pin.
VSS	Grou	Ground pin.

2.0 Truth Table

CLK	CEN	GWEN	WEN	A	D	Q	status
	H	X	X	X	X	Hold previous data	Standby mode
	L	H	X	A	X	Q	Read mode
	L	L	H	A	D	Hold previous data	Write mode
	L	L	L	A	D	Hold previous data	Mask mode
other	X	X	X	X	X	Hold previous data	Unchanged

Note: X: don't care

3.0 Capacitance loading (fF) @ TT, 25°c

Voltage	CLK	CEN	GWEN	WEN	A	D
5.0v	297.584	18.1905	49.4974	7.84667	40.1181	16.7494
3.3v	293.159	18.27	48.0111	7.64901	40.1976	16.6433
1.8v	282.301	18.2531	44.3231	7.15847	40.1807	16.0497

4.0 Power Consumption (uW)

Condition of AC Write power is all data input pins switch and AC Read power is all address input and data output pins switch at 1MHz

4.1 5.0V Power

Condition	DC standby	AC Write	AC Read
TT corner, 5.00v, 25°c	0.00062	1017.1	908.1
SS corner, 4.50v, -40°c	0.0005	800.37	721.237
SS corner, 4.50v, 125°c	0.00062	830.363	746.438
FF corner, 5.50v, 125°c	0.0309	1293.85	1165.42
FF corner, 5.50v, -40°c	0.00075	1231.09	1109.16

4.2 3.3V Power

Condition	DC standby	AC Write	AC Read
TT corner, 3.3v, 25°c	0.00027	408.606	369.6
SS corner, 3.0v, -40°c	0.00022	330.795	301.665
SS corner, 3.6v, 125°c	0.00028	347.865	314.25
FF corner, 3.6v, 125°c	0.01212	520.218	468.576
FF corner, 3.6v, -40°c	0.00032	487.188	437.886

4.3 1.8V Power

Condition	DC standby	AC Write	AC Read
TT corner, 1.8v, 25°c	0.00008	112.563	103.176
SS corner, 1.62v, -40°c	0.00006	91.53	84.2238
SS corner, 1.62v, 125°c	0.00009	95.2317	87.8526
FF corner, 1.98v, 125°c	0.00394	144.174	130.433
FF corner,1.98v, -40°c	0.0001	133.709	121.344

5.0 AC Characteristics

The timing and power values measured from the input slew of 20ps on clock pin, 20ps on signal and output load .01pF.

5.1 5.0V AC Characteristics

Symbol	Parameter Description	SNSP Process 4.5v, -40C	SNSP Process 4.5v, 125C	Typical Process 5.0v, 25C	FNFP Process 5.5v, 125C	FNFP Process 5.5v, -40C	unit
Tcyc	Min clock period	11.8901	6.5937	6.077	4.2421	11.8901	ns
Tckh	Min clock high time	4.3873	2.3769	2.1038	1.8983	4.3873	ns
Tckl	Min clock low time	5.7235	2.2522	1.9814	1.4532	5.7235	ns
Tcsl	CEN set up time (CEN = L)	0.4582	0.5864	0.4059	0.3889	0.3231	ns
Tchl	CEN hold time (CEN = L)	1.2316	1.8518	1.1086	1.0775	0.7646	ns
Tcsh	CEN set up time (CEN = H)	0.5133	0.6606	0.4354	0.411	0.3375	ns
Tchh	CEN hold time (CEN = H)	1.2867	1.9195	1.1381	1.0996	0.779	ns
Twsl	GWEN set up time (GWEN = L)	0.7179	1.0125	0.6271	0.5879	0.4532	ns
Twhl	GWEN hold time (GWEN = L)	1.0255	1.4235	0.8652	0.819	0.6148	ns
Twsh	GWEN set up time (GWEN = H)	0.6755	0.9341	0.5901	0.5622	0.433	ns
Twhh	GWEN hold time (GWEN = H)	0.5605	0.7418	0.4925	0.4851	0.3836	ns
Twisl	WEN set up time (WEN = L)	0.2494	0.3009	0.2391	0.218	0.2038	ns
Twihl	WEN hold time (WEN = L)	1.0282	1.4235	0.8652	0.819	0.6148	ns
Twish	WEN set up time (WEN = H)	0	0	0	0	0	ns
Twihl	WEN hold time (WEN = H)	0.5605	0.7418	0.4931	0.4851	0.3837	ns
Tasl	A set up time (A = L)	1.1558	1.5283	0.9474	0.8643	0.679	ns
Tahl	A hold time (A = L)	0.6375	0.8184	0.5362	0.4959	0.4032	ns
Tash	A set up time (A = H)	0.7684	1.0405	0.6332	0.5787	0.4539	ns
Tahh	A hold time (A = H)	0.659	0.8526	0.549	0.5055	0.4089	ns
Tdsl	D set up time (D = L)	0.0889	0.0487	0.094	0.0803	0.1129	ns
Tdhl	D hold time (D = L)	0.5488	0.7168	0.4841	0.4914	0.3799	ns
Tdsh	D set up time (D = H)	0.5634	0.7242	0.4577	0.3912	0.3446	ns
Tdhh	D hold time (D= H)	0.7802	1.0735	0.6741	0.6581	0.5006	ns
Tah	Clock high to Q high	5.953	8.7955	4.8599	4.5151	3.1066	ns
Tal	Clock high to Q low	6.1438	9.0608	5.008	4.6284	3.2005	ns

5.2 3.3V AC Characteristics

Symbol	Parameter description	SNSP Process 3.0v, -40C	SNSP Process 3.0, 125C	Typical Process 3.3v, 25C	FNFP Process 3.6v, 125C	FNFP Process 3.6v, -40C	unit
Tcyc	Min clock period	12.5529	18.2595	9.2406	7.9594	5.48	ns
Tckh	Min clock high time	4.5988	5.6648	3.5802	3.2438	2.1235	ns
Tckl	Min clock low time	5.8235	5.4055	3.3345	3.7782	2.5263	ns
Tcsl	CEN set up time (CEN = L)	0.658	0.8516	0.5415	0.497	0.4053	ns
Tchl	CEN hold time (CEN = L)	1.9061	2.8524	1.5935	1.4765	1.0184	ns
Tcsh	CEN set up time (CEN = H)	0.8032	1.076	0.6128	0.5388	0.4264	ns
Tchh	CEN hold time (CEN = H)	2.0053	2.9771	1.6396	1.5031	1.037	ns
Twsl	GWEN set up time (GWEN = L)	1.1636	1.645	0.9175	0.8121	0.5997	ns
Twhl	GWEN hold time (GWEN = L)	1.5057	2.1524	1.1825	1.061	0.7786	ns
Twsh	GWEN set up time (GWEN = H)	1.0276	1.4295	0.8238	0.742	0.5564	ns
Twhh	GWEN hold time (GWEN = H)	0.7708	1.0797	0.6333	0.5996	0.4649	ns
Twisl	WEN set up time (WEN = L)	0.3907	0.444	0.3367	0.2966	0.2662	ns
Twih	WEN hold time (WEN = L)	1.5067	2.1547	1.1829	1.061	0.7786	ns
Twisl	WEN set up time (WEN = H)	0	0	0	0	0	ns
Twih	WEN hold time (WEN = H)	0.7718	1.0797	0.6336	0.5996	0.4649	ns
Tasl	A set up time (A = L)	1.6927	2.2075	1.2815	1.1145	0.8544	ns
Tahl	A hold time (A = L)	0.884	1.1506	0.6974	0.6173	0.4955	ns
Tash	A set up time (A = H)	1.2458	1.6418	0.9275	0.7869	0.6093	ns
Tahh	A hold time (A = H)	0.9477	1.2387	0.7323	0.6397	0.5087	ns
Tdsl	D set up time (D = L)	0.1197	0.0318	0.1189	0.1044	0.1415	ns
Tdhl	D hold time (D = L)	0.668	0.9388	0.5924	0.576	0.4429	ns
Tdsh	D set up time (D = H)	0.9612	1.1874	0.6739	0.5391	0.4509	ns
Tdhh	D hold time (D= H)	1.1461	1.6115	0.9064	0.8323	0.6202	ns

5.3 1.8V AC Characteristics

Symbol	Parameter description	SNSP Process 1.62v, -40C	SNSP Process 1.62v, 125C	Typical Process 1.8v, 25C	FNFP Process 1.98v, 125C	FNFP Process 1.98v, -40C	unit
Tcyc	Min clock period	52.6523	56.5713	23.5606	14.9291	10.9449	ns
Tckh	Min clock high time	17.8208	13.3554	11.779	7.4108	4.2538	ns
Tckl	Min clock low time	24.5821	27.1047	10.0614	6.1401	4.34	ns
Tcsl	CEN set up time (CEN = L)	2.3698	2.4602	1.1516	0.801	0.6549	ns
Tchl	CEN hold time (CEN = L)	7.2664	8.1591	3.8304	2.7423	2.0008	ns
Tcsh	CEN set up time (CEN = H)	3.5768	3.5842	1.5564	0.9737	0.7969	ns
Tchh	CEN hold time (CEN = H)	8.1164	8.8542	4.0473	2.8046	2.056	ns
Twsl	GWEN set up time (GWEN = L)	5.3954	5.5797	2.4116	1.5291	1.1932	ns
Twhl	GWEN hold time (GWEN = L)	6.8571	7.3684	2.7234	1.8466	1.3762	ns
Twsh	GWEN set up time (GWEN = H)	3.7876	4.1535	1.8907	1.2981	1.0047	ns
Twhh	GWEN hold time (GWEN = H)	4.1373	4.3563	1.4279	0.9502	0.7447	ns
Twisl	WEN set up time (WEN = L)	0	0	0.5579	0.4839	0.4286	ns
Twihl	WEN hold time (WEN = L)	6.895	7.3911	2.7323	1.8466	1.3786	ns
Twish	WEN set up time (WEN = H)	0	0	0	0	0	ns
Twihl	WEN hold time (WEN = H)	4.1449	4.3647	1.4331	0.9502	0.7447	ns
Tasl	A set up time (A = L)	3.7675	4.186	2.5915	1.8749	1.4826	ns
Tahl	A hold time (A = L)	2.4888	2.7025	1.3228	0.954	0.7737	ns
Tash	A set up time (A = H)	3.5248	3.6466	2.1665	1.4549	1.1977	ns
Tahh	A hold time (A = H)	3.0827	3.2603	1.5182	1.0367	0.8439	ns
Tdsl	D set up time (D = L)	0	0	0	0.0668	0.1388	ns
Tdhl	D hold time (D = L)	3.3868	3.4901	1.0901	0.8321	0.6123	ns
Tdsh	D set up time (D = H)	3.1979	3.0367	1.745	0.9832	0.8835	ns
Tdhh	D hold time (D= H)	6.0875	6.3089	2.2346	1.4269	1.1036	ns
Tah	Clock high to Q high	36.7512	40.5756	17.2992	11.3022	8.3234	ns
Tal	Clock high to Q low	39.2964	42.84	18.2016	11.7799	8.7016	ns

AC Timing Waveform Chart

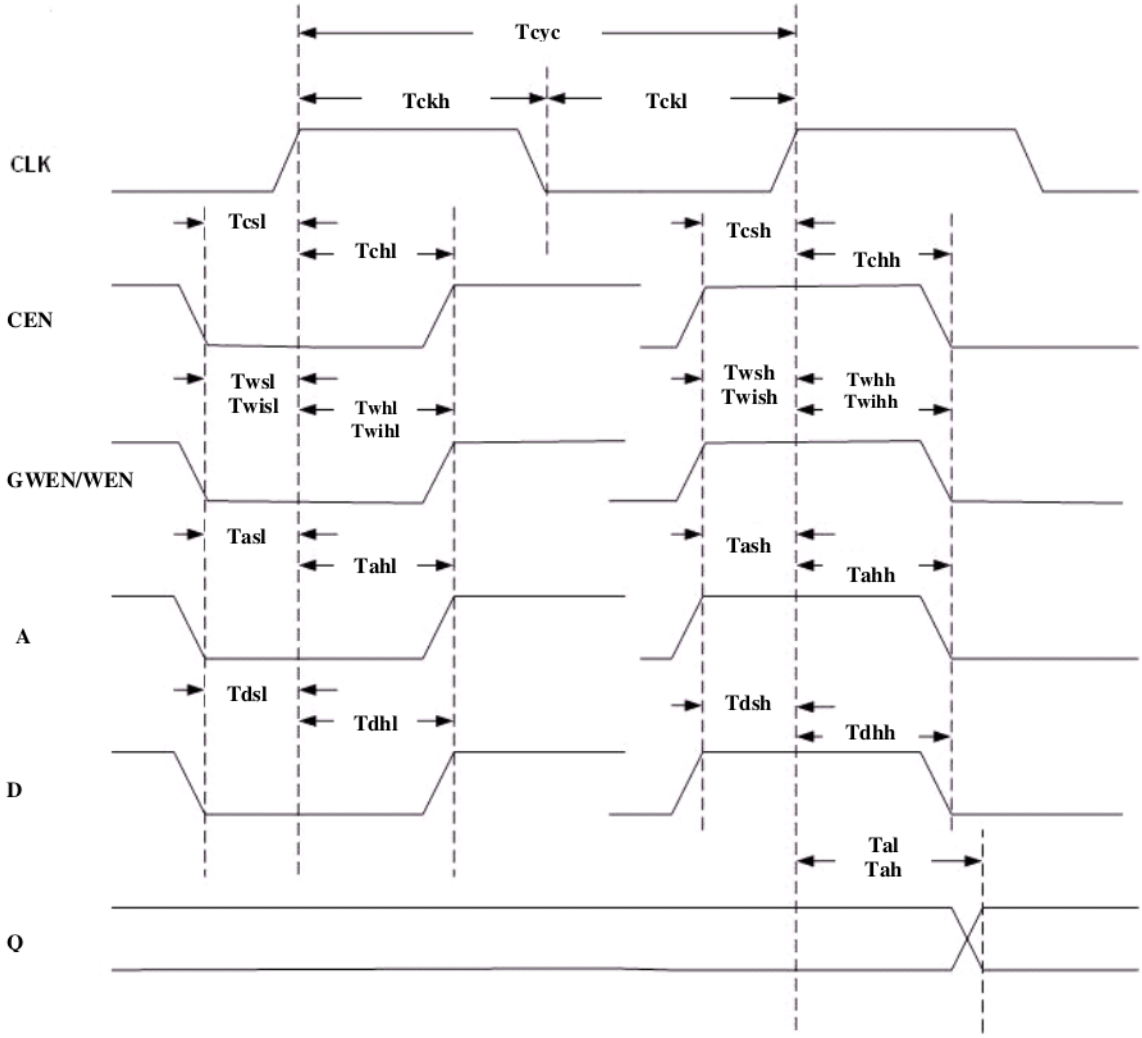

6.0 Physical Dimensions

Width(um)	Height(um)	Area(um^2)
431.86	484.88	209400.2768

CHAPTER

FOUR

PHYSICAL VERIFICATION

GlobalFoundries Singapore PTE LTD

0.18UM 3.3V/(5V)6V MCU Technology

Topological And Reliability

Design Rules

4.1 Design Manual

4.1.1 1.0 Purpose

This document provides topological layout rules to generate masks in a 0.18μm 3.3V/(5V)6V dual-gate MCU Technology Processes.

4.1.2 2.0 Scope

2.1 This document covers rules from COMP layer to Passivation layer and scribe line layout. The reliability section provides layout guidelines for electromigration (EM), process-induced-damage (PID), latchup rules, ESD protection and stress migration. Device parameters, device models and process flow are available in separate documents.

2.2 This document also provides information on drawn layer definition, generated layer rules and mask layer numbers.

2.3 The dimensions stated in this document refer to the minimum allowed geometry or the window of allowed geometry. Deviations from these rules have to be approved by GlobalFoundries.

2.4 Refer to YI-000-XX010 for the terminology used in GlobalFoundries design rule specifications.

2.5 Two terms used in this document have the following specific meaning:

- Design Rules ("Rules" or "Layout Rules") specify layout dimensions that meet both our Process and Electrical Parameter Specifications. As such, rules are implemented in our Design Rule Checker (DRC) runsets. Prior to design data submission using GlobalFoundries Foundry Service Request Specification (CX-008) procedure, the design must pass all DRC tests. Rule violations are required to complete Design Rule Waiver Request Procedure (CX-020) before design is accepted for tapeout.
- Design Guidelines ("Guidelines" or "Layout Guidelines") are provided on an "as is" basis, without warranty of any kind, express or implied. These guidelines are specified to assist the reader in designing circuits for improved manufacturability and reliability. GlobalFoundries recognizes and acknowledges that other design or layout techniques for improving manufacturing and reliability exist. Therefore, guidelines are not implemented in DRC runsets, nor are they reviewed in the Desig Rule Waiver Request Procedure (CX-020).

2.6 Refer to the reference documents for information on mask sizing and alignment sequence (Bias Table), Optical Proximity Correction (OPC), Proprietary SRAM cells, and dummy COMP generation.

2.7 Use the table below for Process Identification on operating voltage selection:-

Process	Operating Voltages	PID in Fab3E
0.18 3.3V 6V (No MIM	LV=3.3V, HV=5V or 6V	TH18*0019A
0.18 3.3V 6V (wit MIM	LV=3.3V, HV=5V or 6V	TH18*0020A

Note: "*" in PID denotes any numeric number for metal layer options.

2.8 Use the table below for processing of various metal level options for GlobalFoundries INTERNAL REFERENCE ONLY (e.g. frame structure, scribeline monitoring structures, testchip layout, etc.)

Levels of Metal	BEOL metal and via to be included
6LM	Metal1, Via1, Metal2, Via2, Metal3, Via3, Metal4, Via4, Metal5, Via5, MetalTop.
5LM	Metal1, Via1, Metal2, Via2, Metal3, Via3, Metal4, Via4, MetalTop. SKIP Metal5, Via5.
4LM	Metal1, Via1, Metal2, Via2, Metal3, Via3, MetalTop. SKIP Metal5, Via5, Metal4, Via4.
3LM	Metal1, Via1, Metal2, Via2, MetalTop. SKIP Metal5, Via5, Metal4, Via4, Metal3, Via3.
2LM	Metal1, Via1, MetalTop. SKIP Metal5, Via5, Metal4, Via4, Metal3, Via3, Metal2, Via2.

Use the table below for processing of various metal level options for **DESIGN ACTIVITIES** (e.g. product design-in, libraries solutions, IPs solutions etc.)

Levels of Metal	BEOL metal and via to be included
6LM	Metal1, Via1, Metal2, Via2, Metal3, Via3, Metal4, Via4, Metal5, Via5, MetalTop.
5LM	Metal1, Via1, Metal2, Via2, Metal3, Via3, Metal4, Via4, Metal5. Metal 5 must comply with MetalTop rule.
4LM	Metal1, Via1, Metal2, Via2, Metal3, Via3, Metal4. Metal 4 must comply with MetalTop rule.
3LM	Metal1, Via1, Metal2, Via2, Metal3. Metal 3 must comply with MetalTop rule.
2LM	Metal1, Via1, Metal2. Metal 2 must comply with MetalTop rule.

2.9 Use the table below for Process Identification on Select Type of Guard Ring:-

Type of Guard Ring	Guard Ring selected	PID in Fab3E
CUS-TOMI	Customer to insert guard ring	TH18*00G1A
FOUN	Foundry to insert guard ring	TH18*00G1A

Note: "*" in PID denotes any numeric number for metal layer options

2.10 Current 0.18 MCU PDK support following BEOL

No	Metal stack option
1	1P2M, TM30K
2	1P3M,TM6K, MIM Option A
3	1P3M,TM9K, MIM Option A
4	1P3M,TM11K, MIM Option A
5	1P3M,TM30K, MIM Option A
6	1P4M,TM6K, MIM Option A
7	1P4M,TM9K, MIM Option A
8	1P4M,TM11K, MIM Option A
9	1P4M,TM30K, MIM Option A
10	1P4M,TM9K, MIM Option B
11	1P4M,TM11K, MIM Option B
12	1P4M,TM30K, MIM Option B
13	1P5M,TM9K, MIM Option A
14	1P5M,TM9K, MIM Option B
15	1P5M,TM11K, MIM Option B
16	1P6M,TM9K, MIM Option B

Note: MIM option A is between 3 and 2 and option B is TM/TM-1

4.1.3 3.0 Layout Information

3.1 The layout rules defined in this document are expressed in microns (μm).

3.2 All drawn dimensions are the same as the finished silicon dimensions.

3.3 There should not be any notches of geometry smaller than the allowed minimum spacing.

3.4 Consistent layout all designs on a 0.005μm grid will avoid off-grid and snapping issues during database fracturing.

3.5 All drawings and schematics in this document are not drawn to scale.

3.6 Only 90 deg and 45 deg bends are allowed for poly and metal lines.

3.7 All dimensions in this document are considered minimum unless otherwise stated.

4.1.4 4.0 Topological Level Definitions

We define the following in this section:

i. Drawn layers on the layout system

ii. Generated layers created from drawn layers using generation rules

iii. Mask layers by reticle number created from drawn and generated layers

iv. Topological Truth Table for 3.3V/6V process

4.1 Drawn layer definition and abbreviation

The following layers are drawn directly on the layout system.

Table 1: Drawn layers

Layer Type	Layer Name	Purpose	GDS #	Data type
Drawn	COMP (1)	Diffusion for device and interconnect	22	0
Drawn	DNWELL	Deep Nwell	12	0
Drawn	Nwell	Nwell implant	21	0
Drawn	LVPWELL	Pwell implant	204	0
Drawn	Dualgate	6V Gate Oxide	55	0
Drawn	Poly2	POLY2 gate & interconnect	30	0
Drawn	Nplus	Nplus Implant	32	0
Drawn	Pplus	Pplus Implant	31	0
Drawn	SAB	Unsalicided poly & active regions	49	0
Drawn	ESD (2)	ESD Implant (Optional)	24	0
Drawn	Contact	Metal1 to Active or Poly2 contact	33	0
Drawn	Metal1	Metal1 interconnect	34	0
Drawn	Via1	Metal2 to Metal1 contact	35	0
Drawn	Metal2	Metal2 interconnect	36	0
Drawn	Via2	Metal3 to Metal2 contact	38	0
Drawn	Metal3	Metal3 interconnect	42	0
Drawn	Via3	Metal4 to Metal3 contact	40	0
Drawn	Metal4	Metal4 interconnect	46	0
Drawn	Via4	Metal5 to Metal4 contact	41	0
Drawn	Metal5	Metal5 interconnect	81	0
Drawn	Via5	Metal 6 to Metal5 contact	82	0
Drawn	MetalTop	MetalTop interconnect	53	0
Drawn	Pad (1)	Bond pad opening	37	0
Drawn	Resistor (3)	High sheet rho P-poly resistor (Optional)	62	0
Drawn	FHRES (3)	Free high sheet rho P-POLY2 resistor	227	0
Drawn	FuseTop (3)	Top plate of MIM capacitors (Optional)	75	0
Drawn	FuseWindow_D	Metal Fuse window (Optional)	96	1
Drawn	POLYFUSE	POLY FUSE window (Optional)	220	0
Drawn	MVSD	Define LDNMOS Drain	210	0
Drawn	MVPSD	Define LDPMOS Drain	11	39
Drawn	NAT	N-channel native VT mark layer	5	0
Drawn	COMP_Dummy	COMP Dummy fill	22	4
Drawn	Poly2_Dummy	Poly2 Dummy Fill	30	4
Drawn	Metal1_Dummy (4)	Metal1 Dummy Fill	34	4

continues on next page

Table 1 – continued from previous page

Drawn	Metal2_Dummy (4)	Metal2 Dummy Fill	36	4
Drawn	Metal3_Dummy (5)	Metal3 Dummy Fill	42	4
Drawn	Metal4_Dummy (5)	Metal4 Dummy Fill	46	4
Drawn	Metal5_Dummy (5)	Metal5 Dummy Fill	81	4
Drawn	MetalTop_Dummy (5)	MetalTop Dummy Fill	53	4
Drawn	COMP_Label (6)	LABEL drawn at active layer	22	10
Drawn	Poly2_Label (6)	LABEL drawn at poly2 layer	30	10
Drawn	Metal1_Label (6)	LABEL drawn at Metal1 layer	34	10
Drawn	Metal2_Label (6)	LABEL drawn at Metal2 layer	36	10
Drawn	Metal3_Label(6)	LABEL drawn at Metal3 layer	42	10
Drawn	Metal4_Label (6)	LABEL drawn at Metal4 layer	46	10
Drawn	Metal5_Label (6)	LABEL drawn at Metal5 layer	81	10
Drawn	MetalTop_Label (6)	LABEL drawn at MetalTop layer	53	10
Drawn	Metal1_Slot	Metal1 Slot (used to create slots in metal1)	34	3
Drawn	Metal2_Slot	Metal2 Slot (used to create slots in metal2)	36	3
Drawn	Metal3_Slot	Metal3 Slot (used to create slots in metal3)	42	3
Drawn	Metal4_Slot	Metal4 Slot (used to create slots in metal4)	46	3
Drawn	Metal5_Slot	Metal5 Slot (used to create slots in metal5)	81	3
Drawn	MetalTop_Slot	MetalTop Slot (used to create slots in metal top)	53	3
Drawn	UBMPPeri	Direct Bumping option using peripheral printing	183	0
Drawn	UBMPArray	Direct Bumping option using Array printing	184	0
Drawn	UBMEPlate	Direct Bumping option using Electroplating	185	0
Drawn	Schottky_diode	Define Schottky diode area	241	0
Drawn	ZENER	ZENER diode implant	178	0
Marking	RES_MK (1)	Resistor Mark	110	5
Marking	OPC_drc	Marking layer for OPC design rule check.	124	5
Marking	NDMY (1)	Dummy Active Exclude Mark layer	111	5
Marking	PMNDMY (1)	Dummy Poly & Metal Exclude Mark	152	5
Marking	V5_XTOR (7)	Define 5V Transistor Marking Layer	112	1
Marking	CAP_MK (8)	MIM Capacitor Marking layer	117	5
Marking	MOS_CAP_MK	MOS capacitor LVS marking	166	5
Marking	IND_MK	Inductor Mark	151	5
Marking	DIODE_MK	Diode Mark	115	5
Marking	DRC_BJT (9)	BJT marking for DRC	127	5
Marking	LVS_BJT	BJT Mark	118	5
Marking	MIM_L_MK	Min length marking layer for MIM Capacitor	117	10
Marking	Latchup_MK	Marking layer for I/O latch-up rule check	137	5
Marking	GUARD_RING_MK	Marking Layer for Scribe Line Guard Ring	167	5
Marking	OTP_MK	To define OTP area with Marking layer	173	5
Marking	MTPMARK	Multi Time Program Memory cell marking	122	5
Marking	NEO_EE_MK	NeoEE OTP area with Marking layer	88	17
Marking	SramCore (10)	SRAM Mark	108	5
Marking	LVS_RF	RF LVS Mark	100	5
Marking	LVS_Drain	RF Drain LVS Mark	100	7
Marking	IND_MK1	Inductor Mark	151	5
Marking	HVPOLYRS	High Voltage Poly2 Resistor in HV area Marking layer	123	5
Marking	LVS_IO	IO LVS Mark	119	5

continues on next page

Table 1 – continued from previous page

Marking	PROBE_MK	Marking layer for probe pad	13	17
Marking	ESD_MK	Marking layer on ESD protection device	24	5
Marking	LVS_Source	Source LVS/DRC marking Layer	100	8
Marking	WELL_DIODE_MK	Marking layer for Nwell/Psub, LVPwell/Dnwell, DNwell/Psub diode	153	51
Marking	LDMOS_XTOR	LDMOS device mark layer	226	0
Marking	PLFUSE	Marking layer for eFUSE Link	125	5
Marking	EFUSE_MK	Marking layer for whole eFUSE Element	80	5
Marking	MCELL_FEOL_MK (13)	Marking layer to define YMTP Mcell Implant region	11	17
Marking	YMTP_MK (13)	Marking layer to define YMTP Cell and exclude NLDD region	86	17
Marking	DEV_WF_MK	LVS marking layer for Fab special purposes layout	128	17
EDAMark	Metal1_BLK	Place & Route Metal1 Blockage	34	5
EDAMark	Metal2_BLK	Place & Route Metal2 Blockage	36	5
EDAMark	Metal3_BLK	Place & Route Metal3 Blockage	42	5
EDAMark	Metal4_BLK	Place & Route Metal4 Blockage	46	5
EDAMark	Metal5_BLK	Place & Route Metal5 Blockage	81	5
EDAMark	MetalT_BLK	Place & Route MetalTop Blockage	53	5
EDAMark	PR_bndry	PR Boundary for cell, block or chip	0	0
EDAMark	MDIODE	MDiode Mark	116	5
EDAMark	Metal1_Res (11)	Metal 1 Resistor	110	11
EDAMark	Metal2_Res (11)	Metal 2 Resistor	110	12
EDAMark	Metal3_Res (11)	Metal 3 Resistor	110	13
EDAMark	Metal4_Res (11)	Metal 4 Resistor	110	14
EDAMark	Metal5_Res (11)	Metal 5 Resistor	110	15
EDAMark	Metal6_Res (11)	Metal6 Resistor	110	16
DevMark	Border	Border	63	0

Note:

1. Used in the dummy COMP, dummy poly2 & dummy metal generation algorithm (refer to dummy fill rules and guideline).
2. ESD is optional mask to provide ESD implant for 3.3V or 5V/6V devices.
3. Refer to analog rule section for complete list of analog-specific layers and masks.
4. Metal1_Dummy and Metal2_Dummy are dummy fills for Metal1 and Metal2. Data type is used to differentiate between circuits and dummy Metal1 and Metal2. This separation is to facilitate generation of dummy poly2. Dummy poly2 needs to be generated when prime die poly2 density falls below poly2 density requirement. Circuit and metal dummy fill will be "OR" after dummy poly2 is generated (where applicable).
5. Metal3_Dummy, Metal4_Dummy, Metal5_Dummy and MetalTop_Dummy are metal dummy fills. These are separated from circuit metal by using different data type.
6. These layers are only for label drawing and not supposed to be part of the active circuits. Also these layers will be used in DRC and LVS for any wrong placement of label check.
7. V5_XTOR is used as a marking layer to define 5V devices.

8. CAP_MK is used to define the bottom plate of the MIM Capacitor for DRC purpose. It will also be used for LVS purposes. Refer to EDA-CAD-000-GS003 (LVS Recognition and Extraction Guideline) for more information and guidelines on LVS marking layers.
9. DRC_BJT is used to mark BJT devices. BJT should follow LV design rule, unless state in special rules.
10. SRAM Mark layer to mark SRAM cells for SRAM rules
11. Metal resistor should draw Metal1_Res to Metal5_Res for LVS purpose.
12. 3.3V OTP cell must be covered by OTP_MK marking for specific rules check.
13. MCELL_FEOL_MK and YMTP_MK are dedicated for MTP cell implant, which is drawn by IP vendor. These layers are not supported in PDK of this version update.

4.2. Generated Layer and Generation rules

Please refer to the generation algorithm spec: YI-141-GR065 or GR-000179

4.3. Mask Layer Numbering

The following table matches the mask or reticle layer number to the drawn/generated layers.

Table 2: Mask layers

Mask#	Layer Name	Description	Drawn/Generated	Digitized Polarity	Output GDS II #	N-Value
10	COMP	COMP	Drawn + Generated	Chrome	22	1
11	AD	Planarization Aid	Generated	Clear	15	0
5	Nwell	NWELL	Drawn + Generated	Clear	21	0.25
6	DNWELL	Deep Nwell	Drawn	Clear	12	0.25
18	LVPWELL	LVPWELL	Drawn + Generated	Chrome	204	0.25
64	TP	3.3V PMOS Vt Implant	Generated	Clear	10	0.25
61	TN	3.3V NMOS Vt Implant	Generated	Clear	47	0.25
38	Dualgate	Dualgate	Drawn	Chrome	55	1
60	Poly2	POLY2	Drawn	Chrome	30	1
1L	MVNVT	5V or 6V NLDD	Generated	Clear	205	0.25
2E	MVPVT	MTP Cell Implant	Generated	Clear	206	0.25
65	Nplus	Nplus Implant	Drawn	Clear	32	0.5
67	ESD	ESD implant	Drawn	Clear	24	0.25
70	Pplus	Pplus Implant	Drawn + Generated	Clear	31	0.5
63	Resistor	Resistor	Drawn	Clear	62	0.25
68	SAB	Salicide Block	Drawn	Chrome	49	0.25
9Z	POLYFUSE	POLY FUSE Window	Drawn	Clear	220	0.25
75	Contact	Contact	Drawn	Clear	33	1
80	Metal1	Metal1	Drawn + Generated	Chrome	34	1
85	Via1	Via1	Drawn	Clear	35	1
88	Metal2	Metal2	Drawn + Generated	Chrome	36	1

continues on next page

Table 2 – continued from previous page

91	Via2	Via2	Drawn	Clear	38	1
93	Metal3	Metal3	Drawn + Generated	Chrome	42	1
94	Via3	Via3	Drawn	Clear	40	1
96	Metal4	Metal4	Drawn + Generated	Chrome	46	1
92	FuseTop	FuseTop (MIM top)	Drawn	Chrome	75	0.5
97	Via4	Via4	Drawn	Clear	41	1
9E	Metal5	Metal5	Drawn + Generated	Chrome	81	1
9D	Via5	Via5	Drawn	Clear	82	1
98	MetalTop	TopMetal	Drawn + Generated	Chrome	53	0.5
95	Pad	Pad	Drawn + Generated	Clear	37	0
99	PIB	Bond opening and Passivation opening	Generated	Clear	50	0
9A	FuseWin-dow	Metal FuseWindow (Optional)	Drawn + Generated	Clear	96	0.5

Note:

1. L67, L63, L9Z, L92 , L9A and L99 are optional layers.
2. PIB data polarity is chrome for mask used in FAB2. PIB data polarity is clear for mask used in FAB6.
3. L9A for FAB3E MCU OTP metal fuse process only.

4.4. Topological Truth Table for 3.3V/(5V)6V Process

The Topological Truth Table is created here to assist the designer in determining the relationship between GlobalFoundries defined topological layers and the layout of various discrete structures found in the integrated circuit. The table is generated based on GlobalFoundries generation rules "YI-141-GR065". If other algorithms are used to generate implant layers, use this table to ensure that various discrete structures receive the specified implants. In this table, a "0" means that the topological level must not touch the structure. A "1" means that the topological level must either enclose or match the structure. An "X" means that the layer has no electrical impact on the structure. An "Op" means the layer is optional.

Table 3: Topological Truth Table

| Truth Table | 3 P co | | | | | |

Table 3 – continued from previous page

Digitized Area Polarity =>	C	C	C	C	C	C	C	C	C	C	C	C	C	C																	
(1) MOS Transistors:																															
3.3V NMOS (Outside DNWELL)	0	1	0	X	0	1	1	0	0	0	0	X	0	0	0	0	X	0	0	0	0	0	0	X	0	0	0	0	0	0
3.3V NMOS (Inside DNWELL)	1	1	0	1	0	1	1	0	0	0	0	X	0	0	0	0	X	0	0	0	0	0	0	X	0	0	0	0	0	0
3.3V PMOS (Outside DNWELL)	0	1	1	0	0	1	0	1	0	0	0	X	0	0	0	0	X	0	0	0	0	0	0	X	0	0	0	0	0	0
3.3V PMOS (Inside DNWELL)	1	1	X	0	0	1	0	1	0	0	0	X	0	0	0	0	X	0	0	0	0	0	0	X	0	0	0	0	0	0
3.3V native Vt NMOS	0	1	0	0	0	1	1	0	0	0	0	X	0	0	0	0	X	0	0	1	0	0	0	X	0	0	0	0	0	0
6V NMOS (Outside DNWELL)	0	1	0	X	1	1	1	0	0	0	0	X	0	0	0	0	X	0	0	0	0	0	0	X	0	0	0	0	0	0
6V NMOS (Inside DNWELL)	1	1	0	1	1	1	1	0	0	0	0	X	0	0	0	0	X	0	0	0	0	0	0	X	0	0	0	0	0	0
6V PMOS (Outside DNWELL)	0	1	1	0	1	1	0	1	0	0	0	X	0	0	0	0	X	0	0	0	0	0	0	X	0	0	0	0	0	0
6V PMOS (Inside DNWELL)	1	1	X	0	1	1	0	1	0	0	0	X	0	0	0	0	X	0	0	0	0	0	0	X	0	0	0	0	0	0
6V native Vt NMOS	0	1	0	0	1	1	1	0	0	0	0	X	0	0	0	0	X	0	0	1	0	0	0	X	0	0	0	0	0	0
5V NMOS (Outside DNWELL)	0	1	0	X	1	1	1	0	0	0	0	X	0	0	0	1	X	0	0	0	0	0	0	X	0	0	0	0	0	0
5V NMOS (Inside DNWELL)	1	1	0	1	1	1	1	0	0	0	0	X	0	0	0	1	X	0	0	0	0	0	0	X	0	0	0	0	0	0
5V PMOS (Outside DNWELL)	0	1	1	0	1	1	0	1	0	0	0	X	0	0	0	1	X	0	0	0	0	0	0	X	0	0	0	0	0	0
5V PMOS (Inside DNWELL)	1	1	X	0	1	1	0	1	0	0	0	X	0	0	0	1	X	0	0	0	0	0	0	X	0	0	0	0	0	0
10V LDNMOS	0	1	0	0	1	1	1	0	0	0	0	X	0	0	0	0	X	X	0	0	0	0	0	X	0	0	1	0	1	0
10V LDPMOS	1	1	0	0	1	1	0	1	0	0	0	X	0	0	0	0	X	X	0	0	0	0	0	X	0	0	0	1	1	0
(2) BJT:																															
VPNP (Psub as collector)	0	1	1	0	0	0	1	1	0	0	0	X	0	0	0	0	X	0	1	0	0	0	0	0	0	0	0	0	0	0
VNPN (Isolated collector)	1	1	0	1	0	0	1	1	0	0	0	X	0	0	0	0	X	0	1	0	0	0	0	0	0	0	0	0	0	0
(3) Diodes:																															
N+/LVPWELL (3.3V area)	X	1	0	1	0	0	1	1	0	0	0	X	0	0	0	0	X	1	0	0	0	X	X	X	0	0	0	0	0	0
N+/LVPWELL (5V/6V area)	X	1	0	1	1	0	1	1	0	0	0	X	0	0	0	X	X	1	0	0	0	X	X	X	0	0	0	0	0	0
P+/Nwell (3.3V area)	X	1	1	0	0	0	1	1	0	0	0	X	0	0	0	0	X	1	0	0	0	X	X	X	0	0	0	0	0	0
P+/Nwell (5V/6V area)	X	1	1	0	1	0	1	1	0	0	0	X	0	0	0	X	X	1	0	0	0	X	X	X	0	0	0	0	0	0
Nwell/Psub (3.3V area)	0	1	1	0	0	0	1	1	0	0	0	X	0	0	0	0	X	X	0	0	0	X	X	1	0	0	0	0	0	0
Nwell/Psub (5V/6V area)	0	1	1	0	1	0	1	1	0	0	0	X	0	0	0	X	X	X	0	0	0	X	X	1	0	0	0	0	0	0
LVPWELL/DNWELL (3.3V area)	1	1	0	1	0	0	1	1	0	0	0	X	0	0	0	0	X	X	0	0	0	X	X	1	0	0	0	0	0	0
LVPWELL/DNWELL (5V/6V area)	1	1	0	1	1	0	1	1	0	0	0	X	0	0	0	X	X	X	0	0	0	X	X	1	0	0	0	0	0	0
DNWELL/Psub (3.3V area)	1	1	1	0	0	0	1	1	0	0	0	X	0	0	0	0	X	X	0	0	0	X	X	1	0	0	0	0	0	0
DNWELL/Psub (5V/6V area)	1	1	1	0	1	0	1	1	0	0	0	X	0	0	0	X	X	X	0	0	0	X	X	1	0	0	0	0	0	X
sc_diode	1	1	X	0	X	0	1	0	0	0	0	X	0	0	0	X	X	0	0	0	0	0	0	X	0	0	0	0	0	1
(4) Resistors:																															
N+ Diffusion Unsalicided Rs (Outside DNWELL)	0	1	0	X	0	0	1	0	0	0	1	X	0	0	1	X	X	0	0	0	0	0	0	X	0	0	0	0	0	0
P+ Diffusion Unsalicided Rs (Outside DNWELL)	0	1	1	0	0	0	0	1	0	0	1	X	0	0	1	X	X	0	0	0	0	0	0	X	0	0	0	0	0	0
N+ Diffusion Salicided Rs (Outside DNWELL)	0	1	0	X	0	0	1	0	0	0	0	X	0	0	1	X	X	0	0	0	0	0	0	X	0	0	0	0	0	0

continues on next page

Table 3 – continued from previous page

P+ Diffusion Salicided Rs (Outside DNWELL)	0	1	1	0	0	0	0	1	0	0	0	X	0	0	1	X	X	0	0	0	0	0	0	X	0	0	0	0	0	0
N+ Diffusion Unsalicided Rs (Intside DNWELL)	1	1	0	1	0	0	1	0	0	0	1	X	0	0	1	X	X	0	0	0	0	0	0	X	0	0	0	0	0	0
P+ Diffusion Unsalicided Rs (Intside DNWELL)	1	1	X	0	0	0	0	1	0	0	1	X	0	0	1	X	X	0	0	0	0	0	0	X	0	0	0	0	0	0
N+ Diffusion Salicided Rs (Intside DNWELL)	1	1	0	1	0	0	1	0	0	0	0	X	0	0	1	X	X	0	0	0	0	0	0	X	0	0	0	0	0	0
P+ Diffusion Salicided Rs (Intside DNWELL)	1	1	X	0	0	0	0	1	0	0	0	X	0	0	1	X	X	0	0	0	0	0	0	X	0	0	0	0	0	0
N+ Poly Unsalicided Rs	X	0	X	X	X	1	1	0	0	0	1	X	0	0	1	X	X	0	0	0	0	0	0	X	0	0	0	0	0	0
P+ Poly Unsalicided Rs	X	0	X	X	X	1	0	1	0	0	1	X	0	0	1	X	X	0	0	0	0	0	0	X	0	0	0	0	0	0
P+ Poly Salicided Rs	X	0	X	X	X	1	0	1	0	0	0	X	0	0	1	X	X	0	0	0	0	0	0	X	0	0	0	0	0	0
N+ Poly Salicided Rs	X	0	X	X	X	1	1	0	0	0	0	X	0	0	1	X	X	0	0	0	0	0	0	X	0	0	0	0	0	0
1K P+ HRS (3.3V area)	X	0	X	X	0	1	0	1	1	0	1	X	0	0	1	0	X	0	0	0	0	0	0	X	0	0	0	0	0	0
1K P+ HRS (5V/6V area)	X	0	X	X	1	1	0	1	1	0	1	X	0	0	1	X	X	0	0	0	0	0	0	X	0	0	0	0	0	0
2K P+ HRS (3.3V area)	X	0	X	X	0	1	0	1	1	0	1	X	0	0	1	0	X	0	0	0	0	0	0	X	0	0	0	0	0	0
2K P+ HRS (5V/6V area)	X	0	X	X	1	1	0	1	1	0	1	X	0	0	1	X	X	0	0	0	0	0	0	X	0	0	0	0	0	0
3K P+ HRS (3.3V area)	X	0	X	X	0	1	0	1	1	0	1	X	0	0	1	0	X	0	0	0	0	0	0	X	0	0	0	0	0	0
3K P+ HRS (5V/6V area)	X	0	X	X	1	1	0	1	1	0	1	X	0	0	1	X	X	0	0	0	0	0	0	X	0	0	0	0	0	0
Nwell (under STI)	0	1	1	0	0	0	1	0	0	0	0	X	0	0	1	X	X	0	0	0	0	0	0	X	0	0	0	0	0	0
LVPWELL (under STI)	1	1	0	1	0	0	0	1	0	0	0	X	0	0	1	X	X	0	0	0	0	0	0	X	0	0	0	0	0	0
(5) Capacitors:																														
MIM capacitor	X	X	X	X	X	X	X	X	X	X	X	1	X	X	X	X	1	X	X	X	X	X	X	X	0	0	X	X	X	X
3.3V NMOS Cap (Outside DNWELL)	0	1	0	X	0	1	1	0	0	0	0	X	0	0	0	0	X	0	0	0	1	0	0	X	0	0	0	0	0	0
3.3V NMOS Cap (Inside DNWELL)	1	1	0	1	0	1	1	0	0	0	0	X	0	0	0	0	X	0	0	0	1	0	0	X	0	0	0	0	0	0
3.3V PMOS Cap (Outside DNWELL)	0	1	1	0	0	1	0	1	0	0	0	X	0	0	0	0	X	0	0	0	1	0	0	X	0	0	0	0	0	0
3.3V PMOS Cap (Inside DNWELL)	1	1	X	0	0	1	0	1	0	0	0	X	0	0	0	0	X	0	0	0	1	0	0	X	0	0	0	0	0	0
3.3V NMOS Cap_b (Inside NWELL, Outside DNWELL)	0	1	1	0	0	1	1	0	0	0	0	X	0	0	0	0	X	0	0	0	1	0	0	X	0	0	0	0	0	0
3.3V NMOS Cap_b (Inside NWELL, Inside DNWELL)	1	1	X	0	0	1	1	0	0	0	0	X	0	0	0	0	X	0	0	0	1	0	0	X	0	0	0	0	0	0
3.3V PMOS Cap_b (Inside LVPWELL, Outside DNWELL)	0	1	0	X	0	1	0	1	0	0	0	X	0	0	0	0	X	0	0	0	1	0	0	X	0	0	0	0	0	0
3.3V PMOS Cap_b (Inside LVPWELL, Inside DNWELL)	1	1	0	1	0	1	0	1	0	0	0	X	0	0	0	0	X	0	0	0	1	0	0	X	0	0	0	0	0	0
5V/6V NMOS Cap (Outside DNWELL)	0	1	0	X	1	1	1	0	0	0	0	X	0	0	0	X	X	0	0	0	1	0	0	X	0	0	0	0	0	0
5V/6V NMOS Cap (Inside DNWELL)	1	1	0	1	1	1	1	0	0	0	0	X	0	0	0	X	X	0	0	0	1	0	0	X	0	0	0	0	0	0
5V/6V PMOS Cap (Outside DNWELL)	0	1	1	0	1	1	0	1	0	0	0	X	0	0	0	X	X	0	0	0	1	0	0	X	0	0	0	0	0	0
5V/6V PMOS Cap (Inside DNWELL)	1	1	X	0	1	1	0	1	0	0	0	X	0	0	0	X	X	0	0	0	1	0	0	X	0	0	0	0	0	0
5V/6V NMOS Cap_b (Inside NWELL, Outside DNWELL)	0	1	1	0	1	1	1	0	0	0	0	X	0	0	0	X	X	0	0	0	1	0	0	X	0	0	0	0	0	0
5V/6V NMOS Cap_b (Inside NWELL, Inside DNWELL)	1	1	X	0	1	1	1	0	0	0	0	X	0	0	0	X	X	0	0	0	1	0	0	X	0	0	0	0	0	0
5V/6V PMOS Cap_b (Inside LVPWELL, Outside DNWELL)	0	1	0	X	1	1	0	1	0	0	0	X	0	0	0	X	X	0	0	0	1	0	0	X	0	0	0	0	0	0
5V/6V PMOS Cap_b (Inside LVPWELL, Inside DNWELL)	1	1	0	1	1	1	0	1	0	0	0	X	0	0	0	X	X	0	0	0	1	0	0	X	0	0	0	0	0	0

continues on next page

Table 3 – continued from previous page

(6) Well Taps																														
Nwell tap (Outside DNWELL)	0	1	1	0	X	0	1	0	0	0	0	X	0	0	0	0	X	0	0	0	0	0	0	0	0	0	0	0	0	0
DNWELL/Nwell tap (Inside DNWELL)	1	1	X	0	X	0	1	0	0	0	0	X	0	0	0	0	X	0	0	0	0	0	0	0	0	0	0	0	0	0
LVPWELL tap (Outside DNWELL)	0	1	0	1	X	0	0	1	0	0	0	X	0	0	0	0	X	0	0	0	0	0	0	0	0	0	0	0	0	0
LVPWELL tap (Inside DNWELL)	1	1	0	1	X	0	0	1	0	0	0	X	0	0	0	0	X	0	0	0	0	0	0	0	0	0	0	0	0	0
(7) N+ Poly Fuse (Optional):	X	0	X	X	X	1	1	0	0	X	1	X	0	1	0	0	X	0	0	0	0	0	0	0	0	0	0	0	0	0
(8) Metal Fuse (Optional):	X	0	X	X	X	0	X	X	X	X	X	X	1	0	0	0	X	0	0	0	0	0	0	0	0	0	0	0	0	0
(9) ESD																														
nfet_03v3_dn_dss (SAB 3.3V NMOS inside DNWELL)	1	1	0	1	0	1	1	0	0	X	1	X	0	0	0	0	X	0	0	0	0	1	1	X	0	0	0	0	0	0
nfet_03v3_dss (SAB 3.3V NMOS outside DNWELL)	0	1	0	X	0	1	1	0	0	X	1	X	0	0	0	0	X	0	0	0	0	1	1	X	0	0	0	0	0	0
nfet_05v0_dn_dss (SAB 5V NMOS inside DNWELL)	1	1	0	1	1	1	1	0	0	X	1	X	0	0	0	1	X	0	0	0	0	1	1	X	0	0	0	0	0	0
nfet_05v0_dss (SAB 5V NMOS outside DNWELL)	0	1	0	X	1	1	1	0	0	X	1	X	0	0	0	1	X	0	0	0	0	1	1	X	0	0	0	0	0	0
nfet_06v0_dn_dss (SAB 6V NMOS inside DNWELL)	1	1	0	1	1	1	1	0	0	X	1	X	0	0	0	0	X	0	0	0	0	1	1	X	0	0	0	0	0	0
nfet_06v0_dss (SAB 6V NMOS outside DNWELL)	0	1	0	X	1	1	1	0	0	X	1	X	0	0	0	0	X	0	0	0	0	1	1	X	0	0	0	0	0	0
pfet_03v3_dn_dss (SAB 3.3V PMOS inside DNWELL)	1	1	X	0	0	1	0	1	0	X	1	X	0	0	0	0	X	0	0	0	0	1	1	X	0	0	0	0	0	0
pfet_03v3_dss (SAB 3.3V PMOS outside DNWELL)	0	1	1	0	0	1	0	1	0	X	1	X	0	0	0	0	X	0	0	0	0	1	1	X	0	0	0	0	0	0
pfet_05v0_dn_dss (SAB 5V PMOS inside DNWELL)	1	1	X	0	1	1	0	1	0	X	1	X	0	0	0	1	X	0	0	0	0	1	1	X	0	0	0	0	0	0
pfet_05v0_dss (SAB 5V PMOS outside DNWELL)	0	1	1	0	1	1	0	1	0	X	1	X	0	0	0	1	X	0	0	0	0	1	1	X	0	0	0	0	0	0
pfet_06v0_dn_dss (SAB 6V PMOS inside DNWELL)	1	1	X	0	1	1	0	1	0	X	1	X	0	0	0	0	X	0	0	0	0	1	1	X	0	0	0	0	0	0
pfet_06v0_dss (SAB 6V PMOS outside DNWELL)	0	1	1	0	1	1	0	1	0	X	1	X	0	0	0	0	X	0	0	0	0	1	1	X	0	0	0	0	0	0
(10) eFuse																														
eFuse	X	0	0	X	X	1	0	1	0	0	0	0	0	0	0	X	0	0	0	0	0	0	1	0	1	1	0	0	0	0

Note: LVPWELL is generated layer in this process. NMOS should be drawn inside P-substrate and LVPWELL is generated. For Native NMOS, LVPWELL implant will be clocked after generation.

4.1.5 5.0 DFM (Design For Manufacturability) Guidelines

Although following minimum design rules and LVS are reasonable for product functionality demonstration, however for better manufacturability and better yield performance it is always better to follow certain good practices of layout. Those practices most of the time may not necessarily result into bigger die size. This document brings out some guidelines for better layout practices for better manufacturability.

5.1 Guidelines for polygon shapes to be avoided

This section describes the shapes or the patterns, which shall be avoided for, better manufacturability and yield.

SH.1: Avoid any COMP, POLY and metal circular or arch shapes with exception only for pre-tested metal inductors with IND_MK mark layer.

SH.2: Avoid any COMP, poly and metal shapes with acute angles (angles <90 deg). Exceptions are only for pre-tested metal inductors with IND_MK mark layers and lettering (non circuit elements).

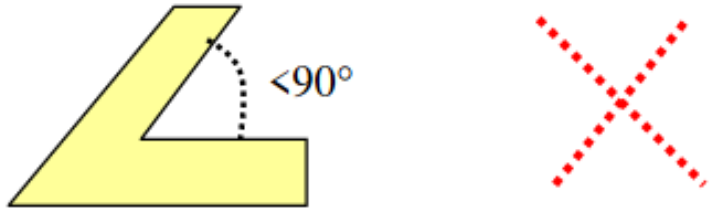

SH.3: Avoid COMP and poly intercepting with one side COMP wider and other side (as shown below)

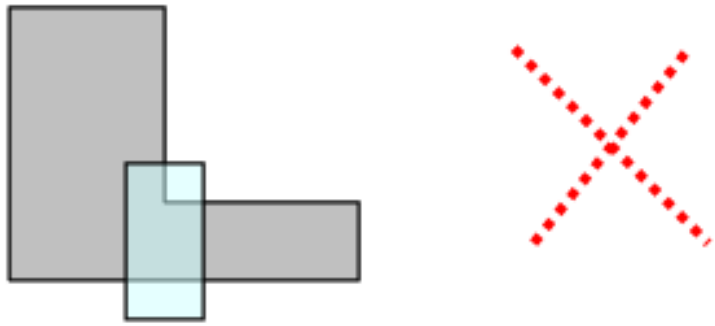

SH.4: Neither COMP nor poly can be tapered within in the intersect area. (Exceptions only for pre-tested SRAM and other memory cells with mark layer).

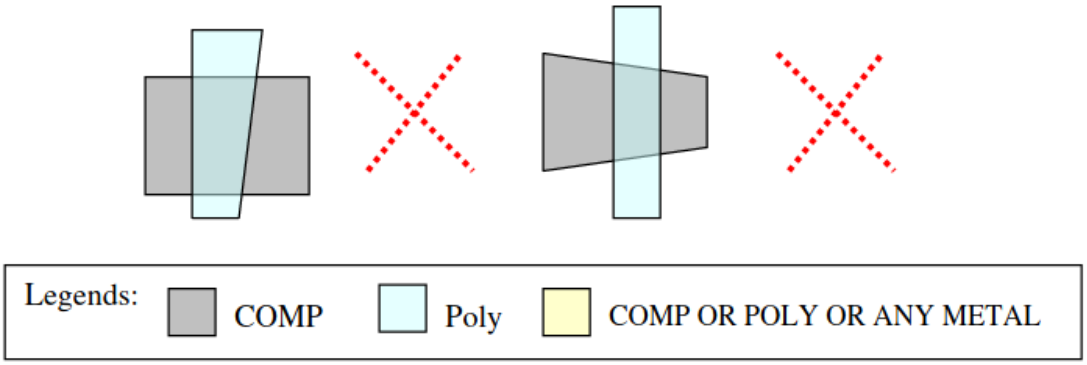

SH.5: Poly bends in active shall be avoided if accuracy of transistor width is important and also in analog blocks. (Exceptions only for pre-tested SRAM and other memory cells with mark layer). This case the accuracy of circuit speed /timing will degraded.

SH.6: Following "U" shape shall be avoided for COMP layer: Especially when X <1.0um and/or Y<0.5um. Exceptions are only for proven memory cells with SRAM bit cell marking layer (Gmcell).

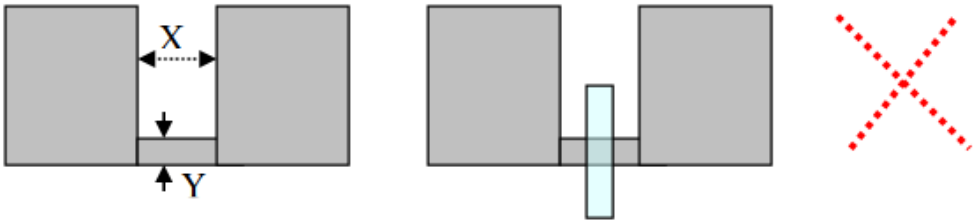

SH.7: Following shape of COMP forming transistors shall be avoided in general and more importantly when X and /or Y dimensions are less than 5um. (Exceptions are only for proven memory cells with SRAM bit cell marking layer (Gmcell).

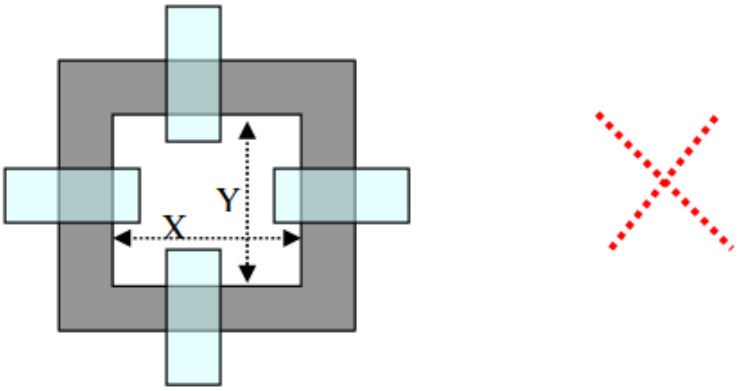

SH.8: Contact on COMP in following manner with minimum rules shall be avoided. (Exceptions are only for proven memory cells with SRAM bit cell marking layer (Gmcell).

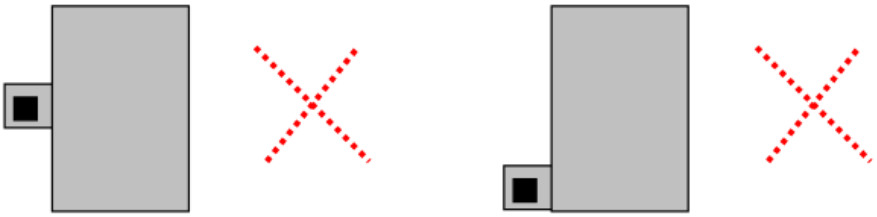

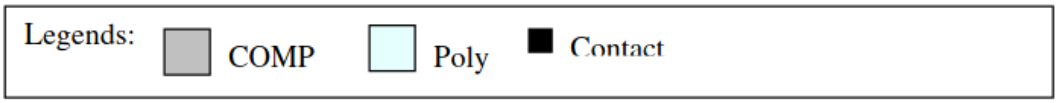

SH.9: Following type-a, type-b and type-c kind of resistor layout shall be avoided: (for matched pair resistors, please refer to matched pair design guidelines in the design rule document).

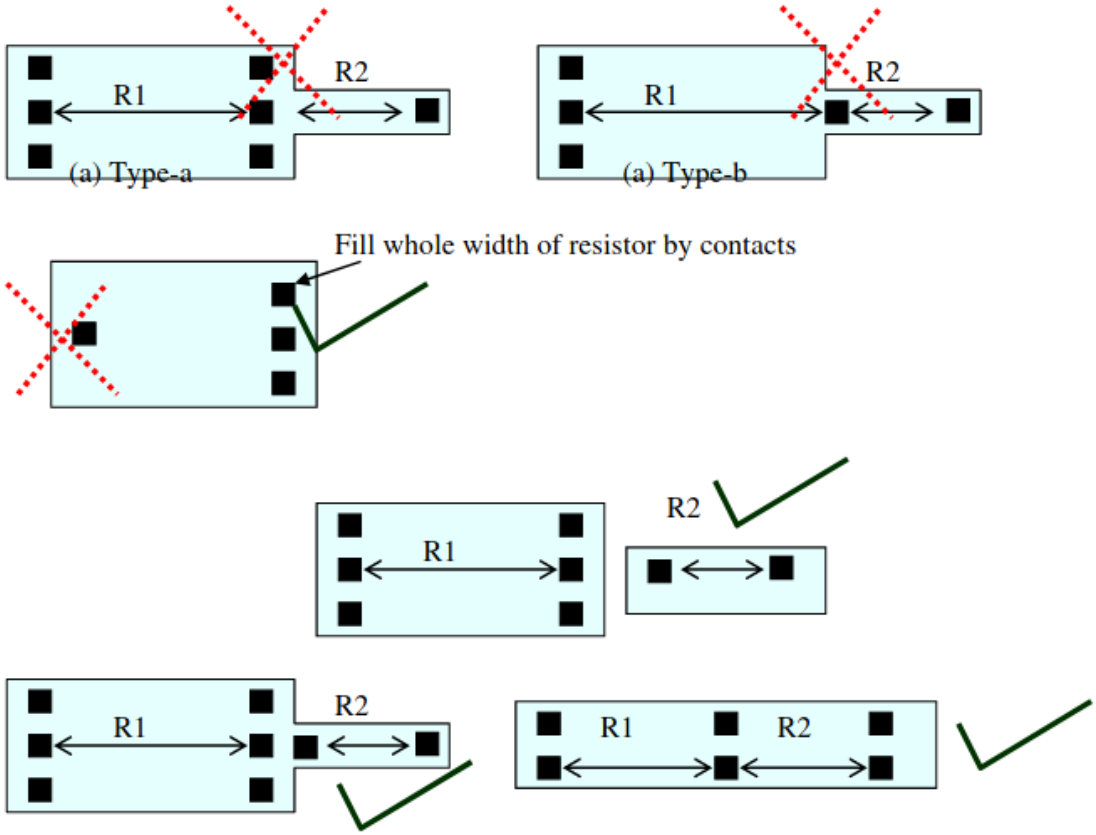
R1
R2
(a) Type-a
R1
R2
(a) Type-b
Fill whole width of resistor by contacts
R1
R2
R1
R2
R1
R2

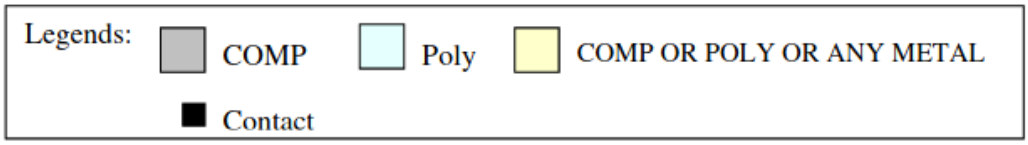
Legends:
COMP
Poly
COMP OR POLY OR ANY METAL
Contact

5.2 Guidelines for better one layout over the other

DMF.1: For metal Bus routing: layout-b is better than layout-a

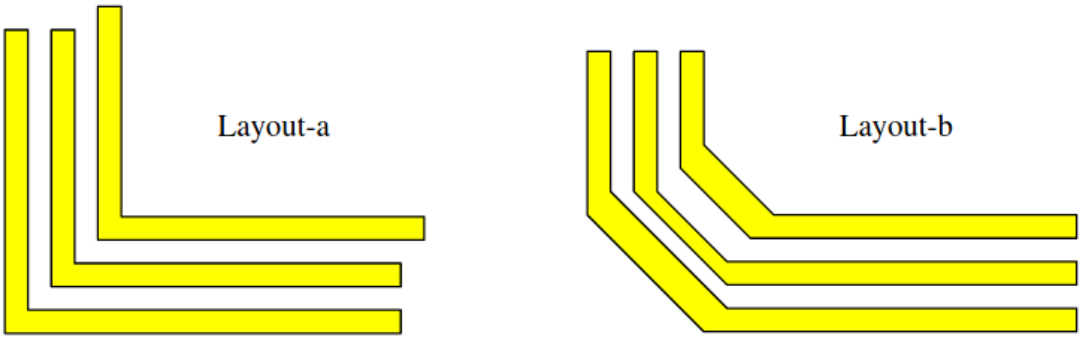

DFM.2: For multiple metal line routing: layout-b is better than layout-a; Avoid minimum line width and space if there is a space.

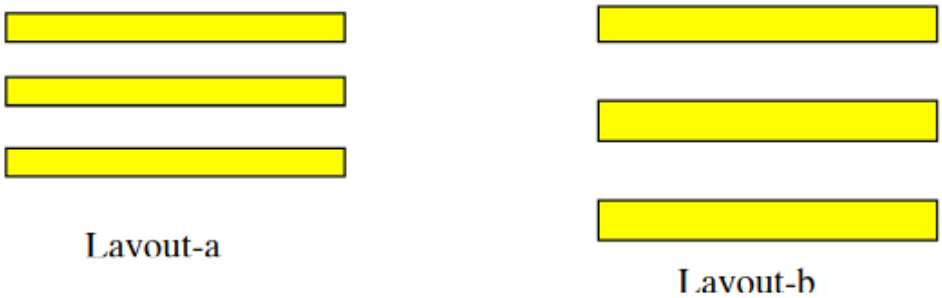

DMF.3a: Multiple contacts and via better than the single one (Layout-b better than layout-a)

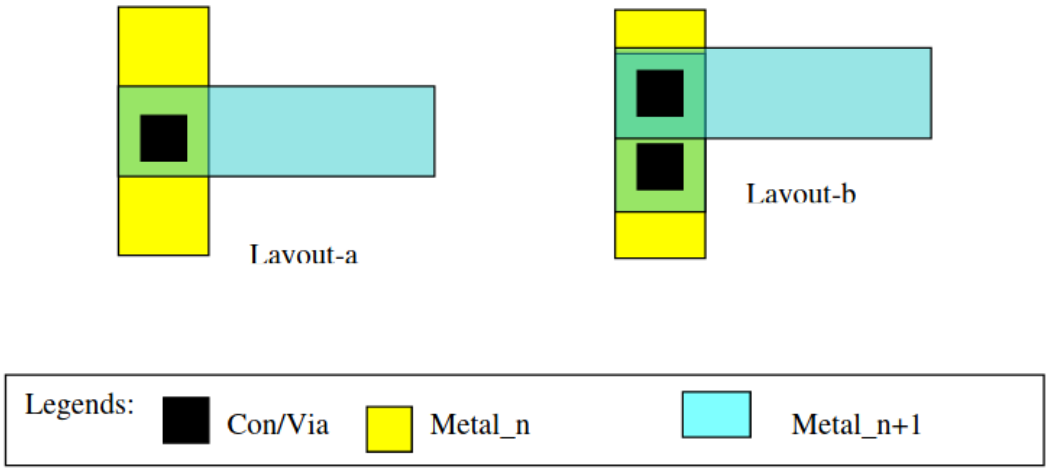

DMF.3b: Multiple contacts and via better than the single one (Layout-b better than layout-a)

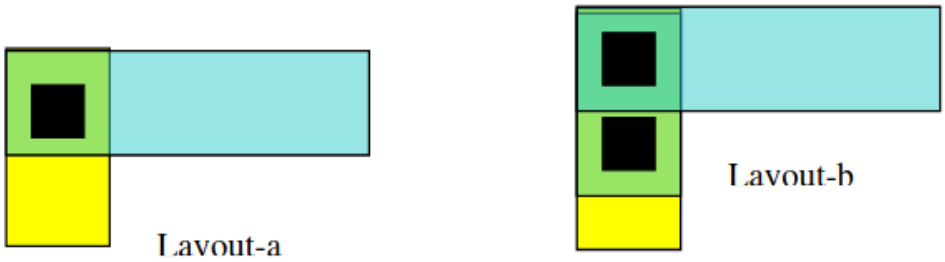

DMF.4: In the following active (COMP) contacts Layout-b is better than that of layout-a and layout-C is the best.

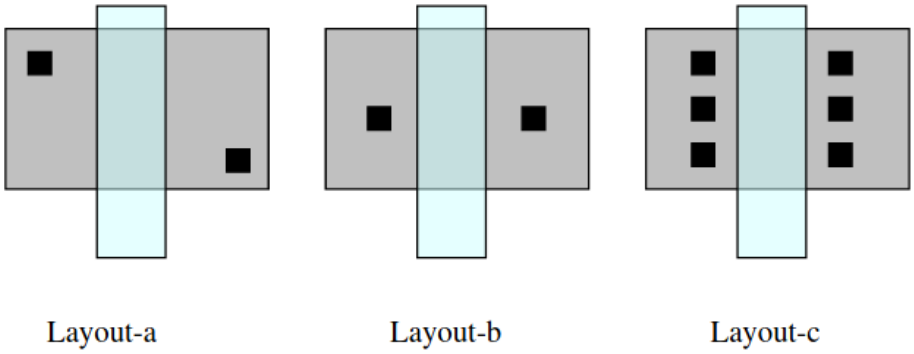

DMF.5: In the following poly contacts and metal vias Layout-b is better than that of layout-a.

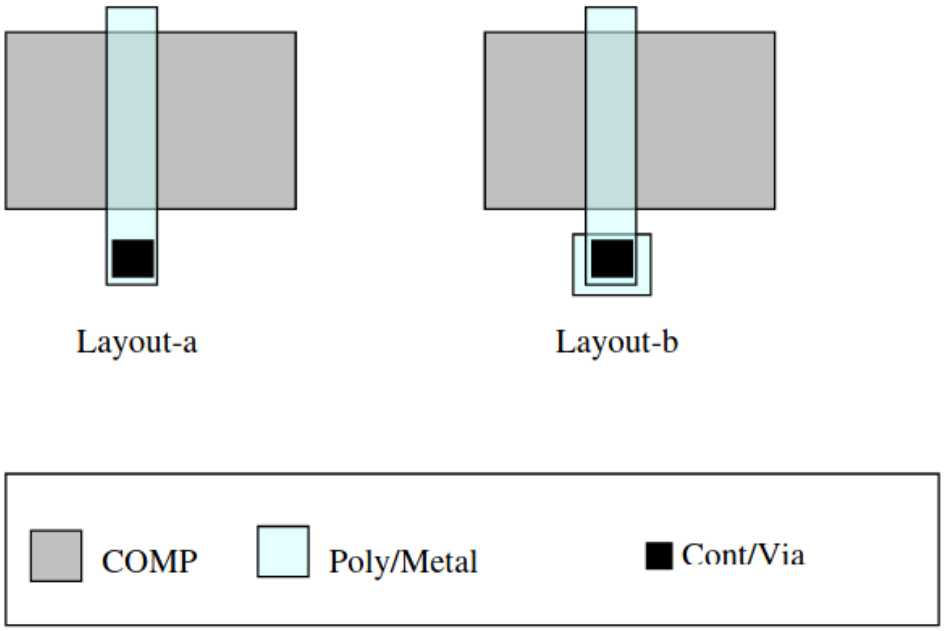

DMF.6: In the following transistor layouts, Layout-b (Y2 >Y1) is better than that of layout-a.

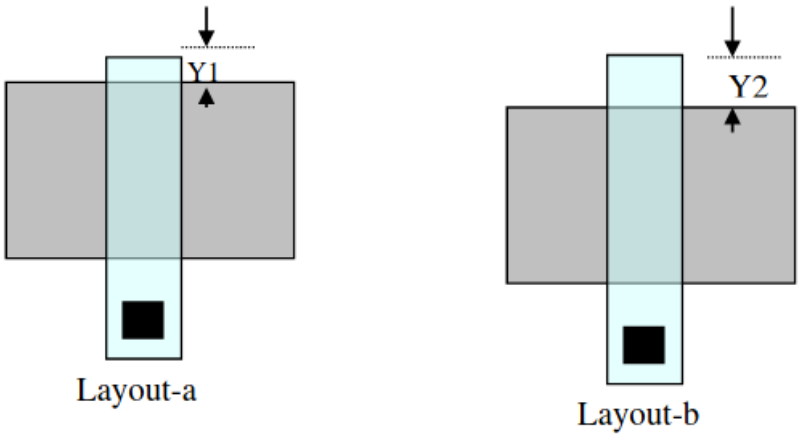

DFM.7: Two transistors with common poly gate: Avoid "x" as minimum DR, better to keep it slightly bigger than minimum design rule:

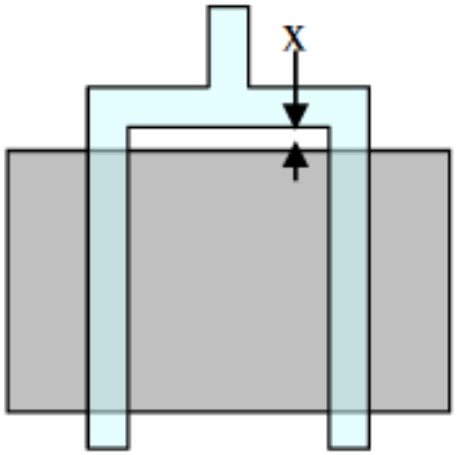

DFM.8: Avoid poly on filed at minimum distance (x) when there is active contact nearby:

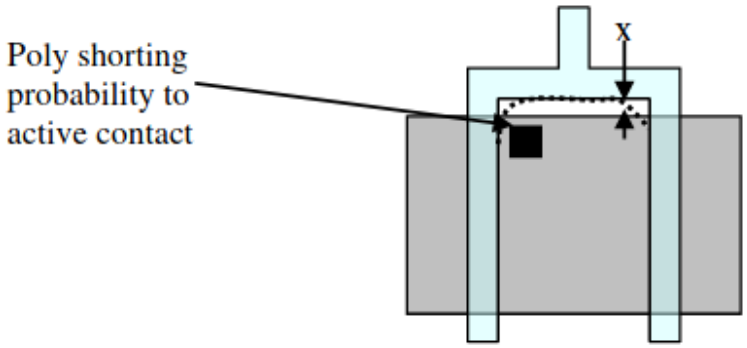

DFM.9: For substrate tap effectiveness: Layout-b is better than layout-a, layout-c is more effective than layout-b and layout-d is the best. Layout-a shall be avoided.

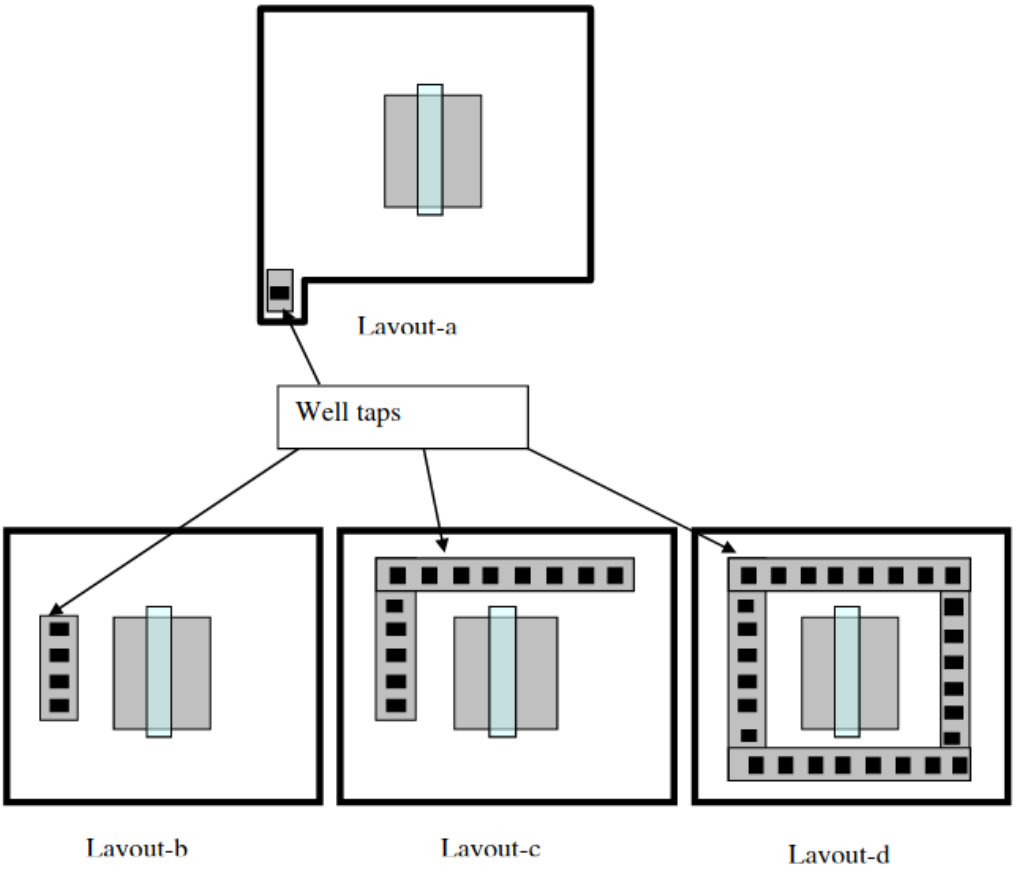

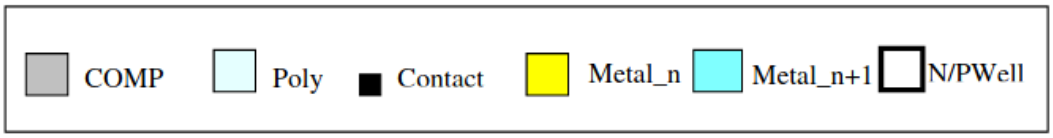

DFM.10: In the following layout if T1 , T2 and T3 are indential devices (expected same WXL) then T2 to T3 matching is better than that to T1, T1 will have higher drain resistance due to contact at the active corner.

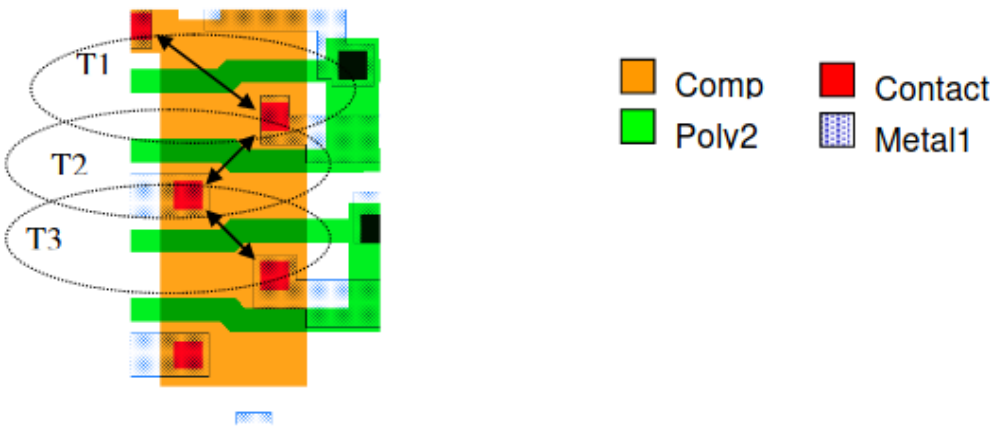

DFM.11: If it is desired to have dense logic layout as shown in layout-a, then it is better to keep bigger width (W2) transitor's poly apacing apart and smaller with closer as shown in layout-C. In other word layout C is better than that of layout-b.

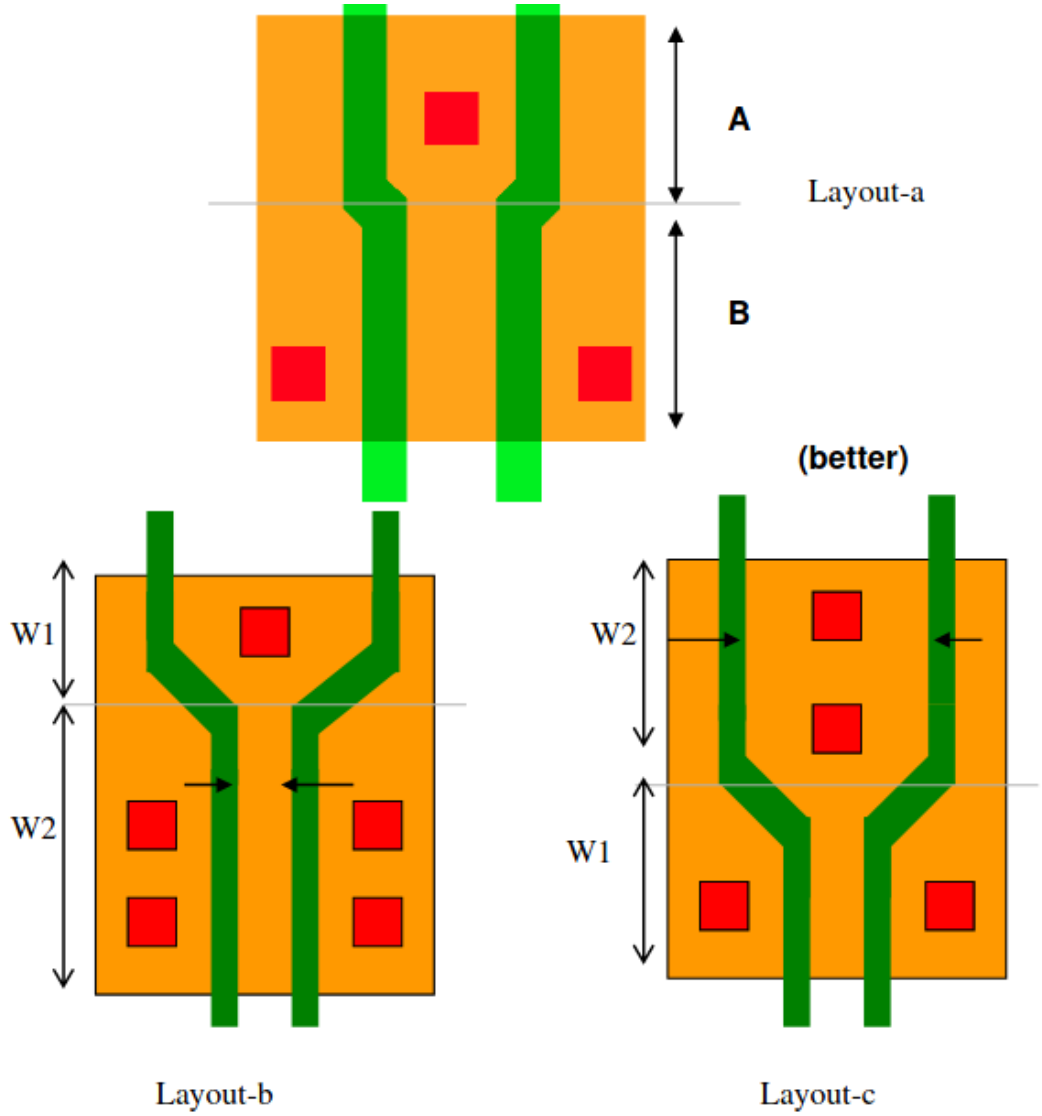

5.3 Other miscellaneous DFM guidelines covered under Design rules

Following are the other miscellaneous guidelines also covered in the design rule document under section 5.0 of the design rules.

(1) Relaxed design rules with dimensions increased from baseline ground-rule minimums will generally improve process and reliability yields. Minimum design dimensions should only be used to decrease chip size or improve device performance.

(2) Minimum lines and spaces increase circuit density. When circuit density is not limited by these rules, increase the minimum line and space values by 10% to 20% as applicable during design layout. This practice improves the product manufacturability; yields and performance by reducing interconnect resistance and capacitance.

(3) The minimum Metal overlap-of-contact and via rules are given to increase interconnect density. Where interconnect is not limited by these rules, relax the Metal overlap-of-contact and via by 10%-20% as applicable during design layout. This will improve both manufacturing margins and reliability.

(4) Narrow polysilicon and diffusion lines are particularly susceptible to localized increases in sheet resistance in a salicide process. In applications where DC voltage drops are critical, avoid using narrow poly2 or diffusion lines.

(5) Since thin-gate-oxide integrity is driven by random process defects, avoid using large gate oxide areas as decoupling capacitors. Follow the antenna ratio rules to ensure reliable gate oxides.

(6) Avoid long parallel routing of intra-layer metal lines. This practice reduces coupling capacitance, improves circuit performance and suppresses cross-talk.

(7) Use top-metal as power supply, ground, and bus signal and global interconnect since it has the lowest resistivity.

(8) Use as many redundant contacts and vias as possible to provide design robustness against interconnect opens. In addition, refer to electro migration section in the design rule for electro migration susceptibility.

(9) Implementing poly2 and metal dummy pattern fill by designer is highly recommended when GDS densities are below the minimum rules specified. Control of dummy fill and minimized impact to critical path circuitry are then assured in layout. Our DRC runsets implement GDS pattern density checks.

(10) As product labels are placed in the chip area and not in the scribe line, labels and logos must obey the design rules in this manual so as to prevent impact to circuit functionality. GlobalFoundries does not provide logo block marking layer to suppress DRC on logos.

5.4 Essential Guidelines for Analog Design

1. For all type of analog resistors follow relevant resistor rules rather than standard layer/routing rules.
2. Wherever possible use small Nplus/Psub diode in LV/HV area to the top metal lines connected to MIM/Gate Oxide capacitors, for the protection of PID. While connecting the diode polarity of the signal coming have to be taken care so that diode does not get forward biased in normal operation. The details are available in PID rules.
3. Do not allow any unrelated metal/poly2/salicided diffusion routing above or below the precision matching components (resistors, capacitors and transistors).
4. For better resistor accuracy, it is better to use wider and longer resistors rather than narrow and short.
5. For better resistor/capacitor/transistor matching, refer to the device mismatch guidelines in the design rule document and the device characterization report for mismatch data.

4.1.6 6.0 Essential Tapeout Checklist

1. All layout databases given to GlobalFoundries should be in layout cell hierarchical based GDSII data.
2. All drawn and designer-generated GDS layers must be provided to GlobalFoundries by the designers for successful DRC, DR waiver and tapeout.
3. Before design data can be submitted for tapeout, the design must pass DRC.

4.1.7 7.0 Layout Rule Description

The following sub-sections use the terms defined in the table below.

Table 4: LAYOUT RULE DESCRIPTION

Term	Definition
NCOMP	COMP AND Nplus
PCOMP	COMP AND Pplus
Field	NOT COMP
Transistor gate	Poly2 AND COMP
N-channel gate	Nplus AND Poly2 AND COMP
P-channel gate	Pplus AND Poly2 AND COMP
Unsalicided Nplus Poly2	Poly2 AND Nplus AND SAB
Unsalicided Pplus Poly2	Poly2 AND Pplus AND SAB
Unsalicided COMP	COMP AND SAB
Unsalicided Poly2	Poly2 AND SAB

7.1 Design Geometry Rules

Table 5: Design Geometry Rules

Rule No.	Description
GRID	The design grid must be an integer multiple of 0.005μm.
OFFGRID	All edge boundaries must be snapped to the grid defined above.
ACUTE	All shapes must be orthogonal or on a 45° unless otherwise stated.

7.2 Dnwell

This layer is defined to put 3.3V and 5V/6V CMOS devices inside deep Nwell for better isolation from substrate noise.

Table 6: DNWELL RULES

RULE NO.	DESCRIPTION	LAYOUT
Layer	DN = DNWELL	
DN.1	Min. DNWELL Width	1.7
DN.2a	Min. DNWELL Space (Equi-potential), Merge if the space is less than	2.5
DN.2b	Min. DNWELL Space (Different potential)	5.42
DN.3	Each DNWELL shall be directly surrounded by PCOMP guard ring tied to the P-substrate potential.	
Note.1	Both 3.3V and 5V/6V transistors are not allowed in the same DNWELL. It is a layout Guide for Customer.	

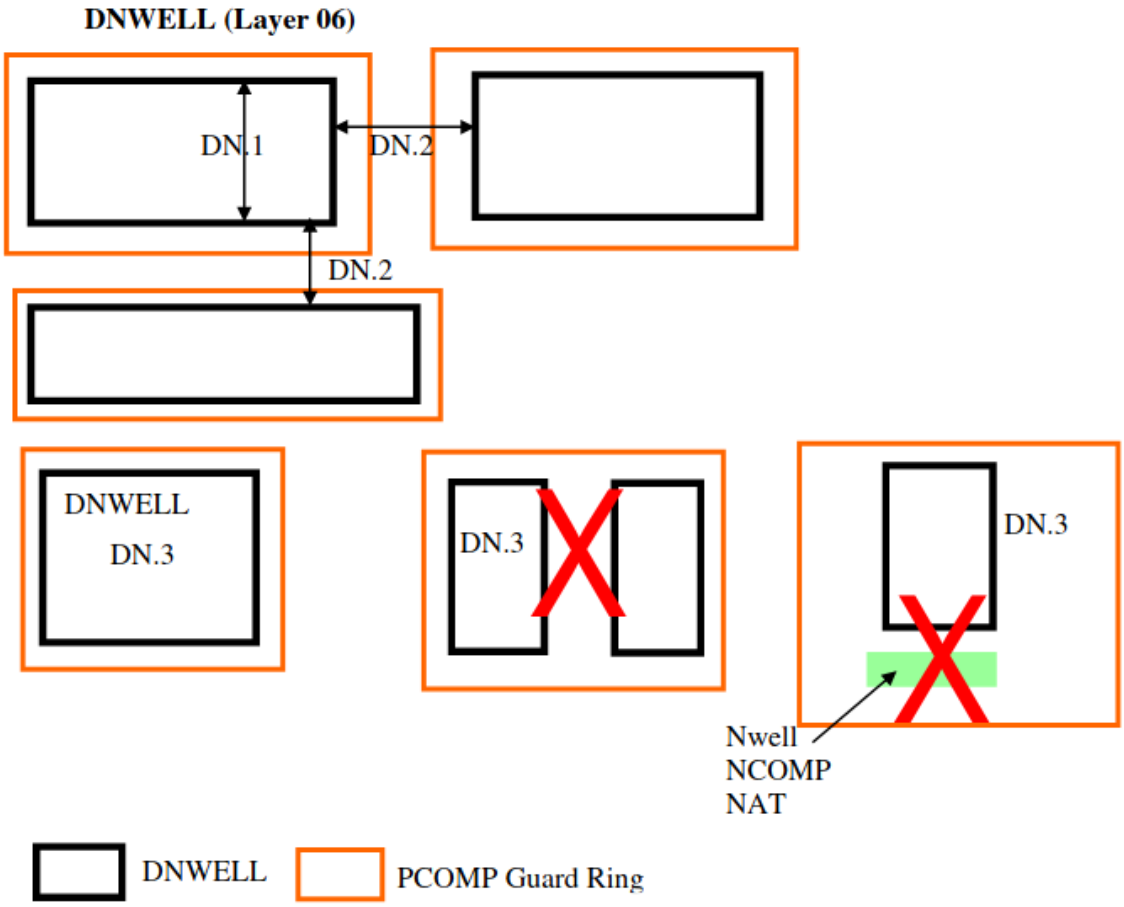

7.3 Lvpwell

This drawn layer is defined for 3.3V and 5V/6V NMOS body . If this layer is used without DNWELL (outside DNWELL), the body of all those transistors will by default be connected to P-substrate potential. If LVPWELL is designed as a resistor, it is not allowed to be placed outside DNWELL.

(A) LVPWELL Inside DNWELL

Table 7: LVPWELL RULES (Inside DNWELL)

RULE NO.	DESCRIPTION	LAY-OUT	
Layer	LPW = LVPWELL	3.3V	5V/6V
LPW.1	Min. LVPWELL Width	0.6	0.74
LPW.2a	Min. LVPWELL to LVPWELL Space (Inside DNWELL) [Different potential]	1.4	1.7
LPW.2b	Min. LVPWELL to LVPWELL Space [Equi potential]	0.86	0.86
LPW.3	Min. DNWELL enclose LVPWELL	2.5	2.5
LPW.4*	If LVPWELL is used as resistor, it must be covered by RES_MK (for LVS purpose). Width of the resistor determined by LVPWELL. Length by COMP-to-COMP space. RES_MK length shall be coinciding with resistor length (Touching COMP each side) and width covering the width of LVPWELL.		
LPW.5	LVPWELL resistors must be enclosed by DNWELL		
Note.1 **	Recommended Min. width to achieve stable LVPWELL resistor.	2	2

Note: * *Appendix B: Rules not coded*

** This note is a layout guide for customer and this rule can be detected by ERC, not by DRC

LVPWELL (Layer 18)

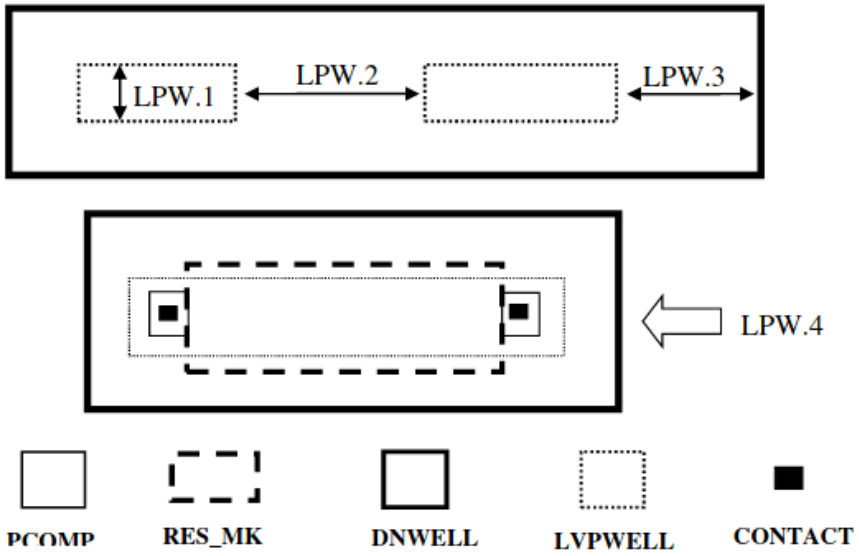

(B) LVPWELL Outside DNWELL

Table 8: LVPWELL RULES (Outside DNWELL)

RULE NO.	DESCRIPTION	LAY-OUT
Layer	LPW = LVPWELL	
LPW.11	Min (LVPWELL outside DNWELL) space to DNWELL	1.5
LPW.12	LVPWELL cannot overlap with Nwell	

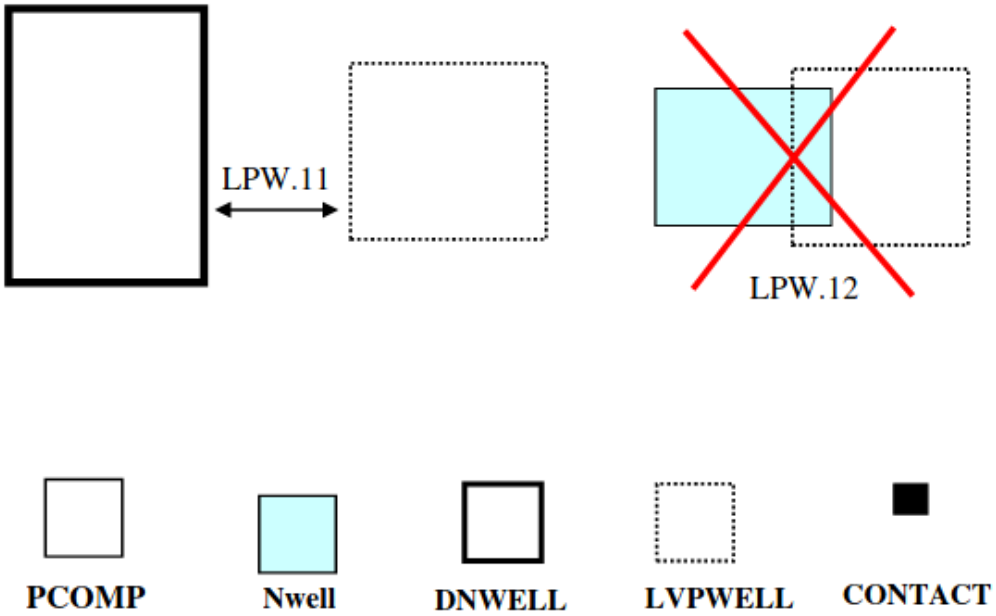

7.4 Nwell

This drawn layer is to define the Nwell for both 3.3V & 5V/6V PMOS transistors. For Nwell as a resistor it can only be used outside DNWELL, as by default all Nwell inside DNWELL will be shorted together through DNWELL.

Table 9: NWELL RULES

RULE NO.	DESCRIPTION	LAY-OUT	
Layer	NW = Nwell	3.3V	5V/6V
NW.1a	Min. Nwell Width (This is only for litho purpose on the generated area)	0.86	0.86
NW.1b	Min. Nwell Width as a resistor (Outside DNWELL only)	2	2
NW.2a	Min. Nwell Space (Outside DNWELL) [Equi-potential], Merge if the space is less than	0.6	0.74
NW.2b	Min. Nwell Space (Outside DNWELL) [Different potential]	1.4	1.7
NW.3	Min. Nwell to DNWELL space	3.1	3.1
NW.4	Min. Nwell to LVPWELL space	0	0
NW.5	Min. DNWELL enclose Nwell	0.5	0.5
NW.6	Nwell resistors can only exist outside DNWELL		
NW.7*	If Nwell is used as resistor, it must be covered by RES_MK (for LVS purpose). Width of the resistor determined by Nwell width. Length by COMP to COMP space. RES_MK length shall be coincide with resistor length (Touching COMP each side) and width covering the width of Nwell)”		

Nwell (Layer 05)

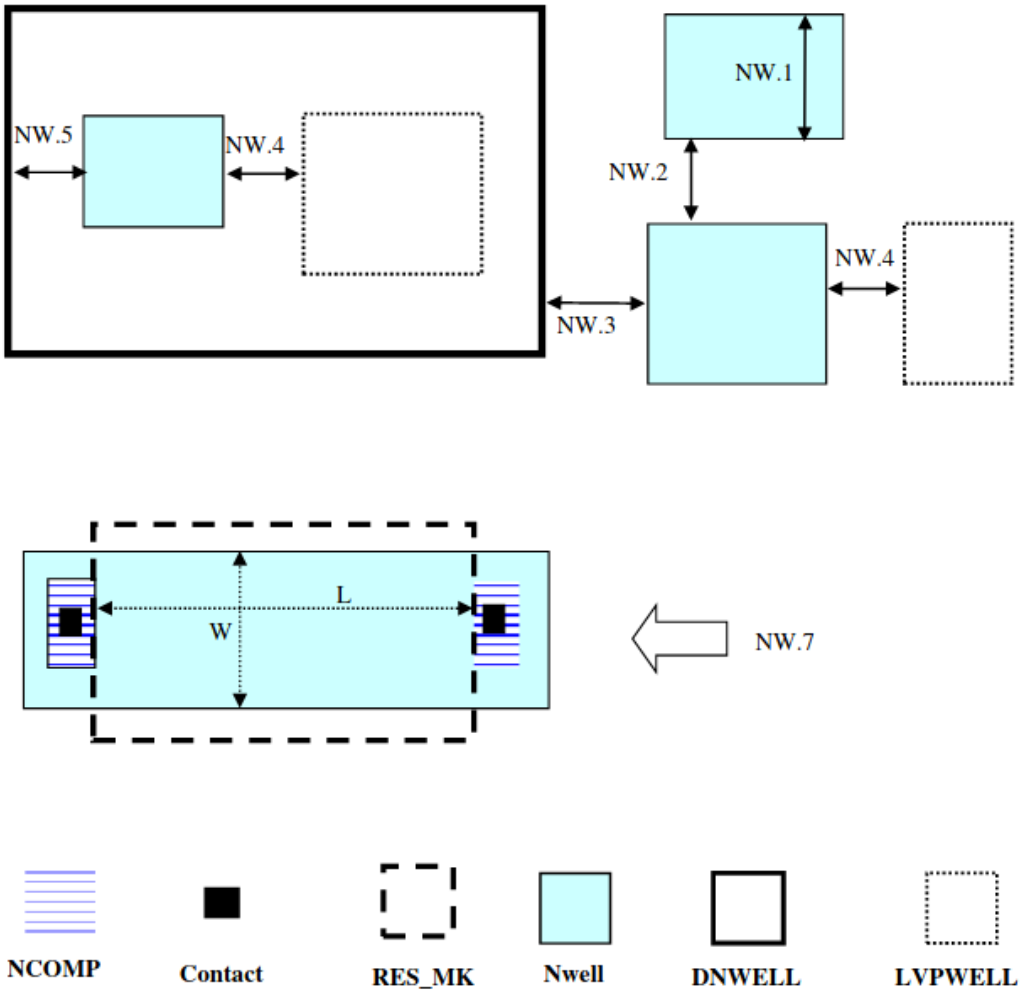

Note: * *Appendix B: Rules not coded*

7.5 Comp

These rules apply for COMP inside as well as outside DNWELL unless stated specifically.

Table 10: COMP RULES

RULE NO.	DESCRIPTION	LAY-OUT RULE	
Layer	DF = Diffusion / Active / Composite	3.3V	5V/6V
DF.1a	Min. COMP Width	0.22	0.3
DF.1b*	Min. COMP Width as a resistor with low sheet resistivity	0.3	0.3
DF.1c	Min. COMP Width for MOSCAP	1	1
DF.2a	Min Channel Width	0.22	0.3
DF.2b	Max. COMP width for all cases except those used for capacitors, marked by "MOS_CAP_MK" layer.	100	100
DF.3a	Min. COMP Space. P-substrate tap (PCOMP outside NWELL and DNWELL) can be butted for different voltage devices as the potential is same	0.28	0.36
DF.3b	Min./Max. NCOMP Space to PCOMP in the same well for butted COMP (MOSCAP butting is not allowed)	0	0
DF.3c	Min. COMP Space in BJT area (area marked by DRC_BJT layer)	0.32	NA
DF.4a	Min. (LVPWELL Space to NCOMP well tap) inside DNWELL	0.12	0.16
DF.4b	Min. DNWELL overlap of NCOMP well tap	0.62	0.66
DF.4c	Min. (Nwell overlap of PCOMP) outside DNWELL	0.43	0.6
DF.4d	Min. (Nwell overlap of NCOMP) outside DNWELL	0.12	0.16
DF.4e	Min. DNWELL overlap of PCOMP	0.93	1.1
DF.5	Min. (LVPWELL overlap of PCOMP well tap) inside DNWELL	0.12	0.16
DF.6	Min. COMP extend beyond gate (it also means source/drain overhang)	0.24	0.4
DF.7	Min. (LVPWELL Spacer to PCOMP) inside DNWELL.	0.43	0.6
DF.8	Min. (LVPWELL overlap of NCOMP) Inside DNWELL	0.43	0.6
DF.9	Min. COMP area (um2)	0.2025	0.2025
DF.10	Min. field area (um2)	0.26	0.26
DF.11	Min. Length of butting COMP edge	0.3	0.3
DF.12	COMP not covered by Nplus or Pplus is forbidden (except those COMP under marking).		
DF.13	Max distance of Nwell tap (NCOMP inside Nwell) from (PCOMP inside Nwell)	20	15
DF.14	Max distance of substrate tap (PCOMP outside Nwell) from (NCOMP outside Nwell)	20	15
DF.15a**	NCOMP inside DNWELL and Dualgate, but outside LVPWELL i.e. [(NCOMP AND DNWELL AND Dualgate) AND (NOT LVPWELL)] can only be connected to 5V/6V VDD."		
DF.15b**	NCOMP inside DNWELL but outside Dualgate and LVPWELL i.e.[(NCOMP AND DNWELL) AND (NOT Dualgate) AND (NOT LVPWELL) can only be connected to 3.3V VDD.		

Rules specific to 3.3V/(5V)6V COMP outside DNWELL

RULE NO.	DESCRIPTION	LAY-OUT RULE	
Layer	DF = Diffusion / Active / Composite	3.3V	5V/6V
DF.16	Min. space from (Nwell outside DNWELL) to (NCOMP outside Nwell and DNWELL).	0.43	0.6
DF.17	Min. space from (Nwell Outside DNWELL) to (PCOMP outside Nwell and DNWELL)	0.12	0.16
DF.18	Min. DNWELL space to (PCOMP outside Nwell and DNWELL)	2.5	2.5
DF.19	Min. DNWELL space to (NCOMP outside Nwell and DNWELL)	3.2	3.28

Note: * *Appendix B: Rules not coded*

** This rule can be detected by ERC, not by DRC

** *Appendix B: Rules not coded*

COMP (Layer 10) for 3.3V

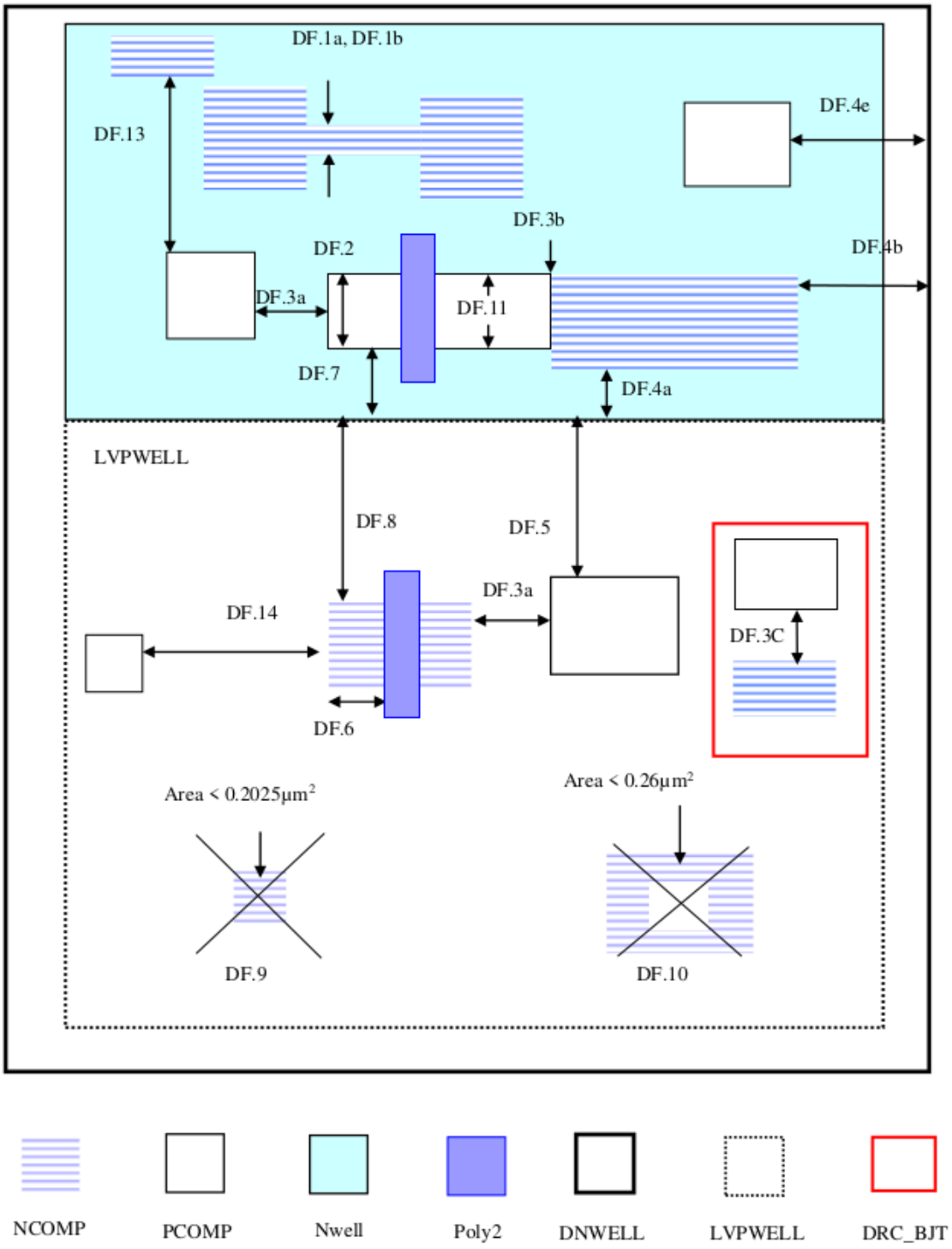

COMP (Layer 10) for 5V/6V

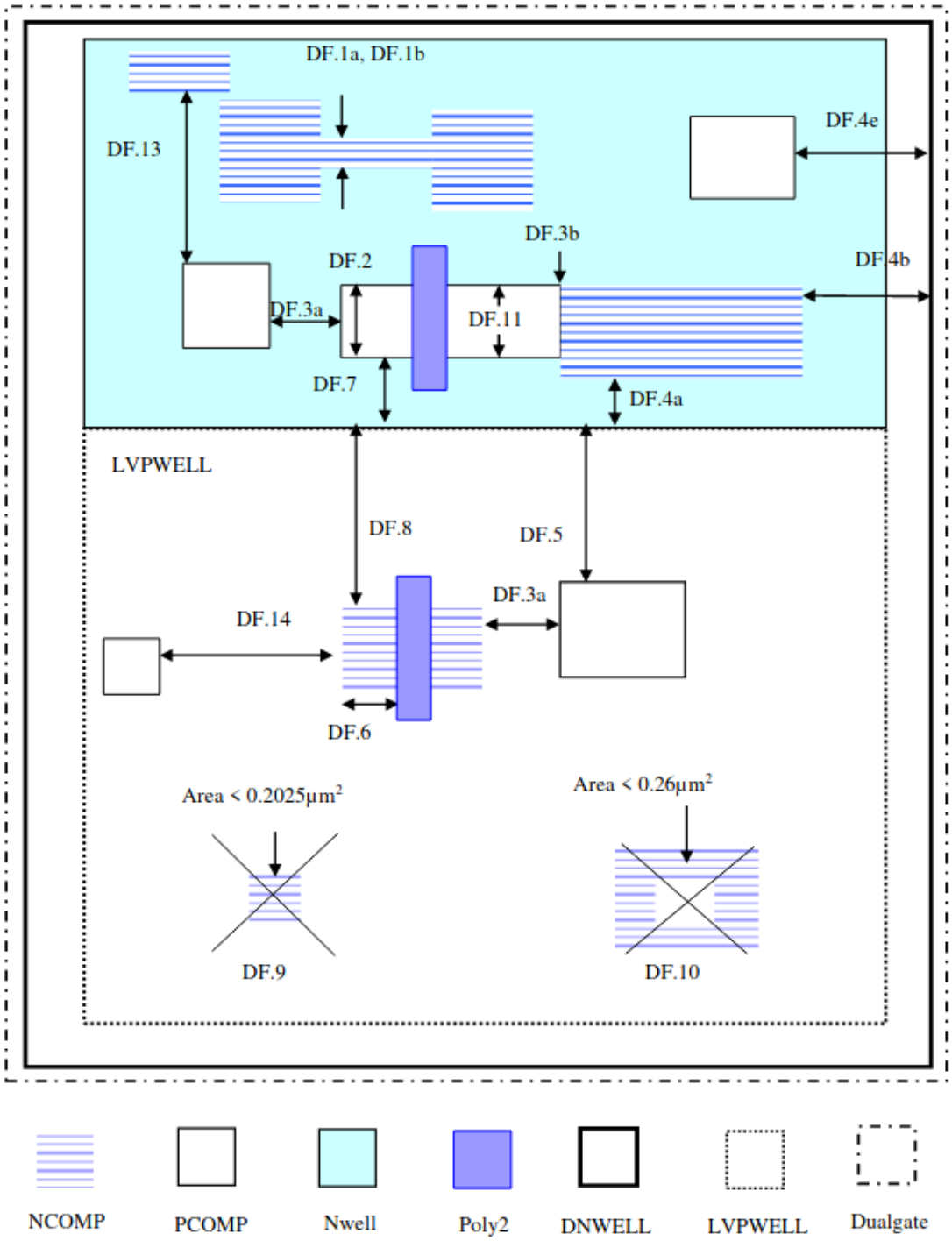

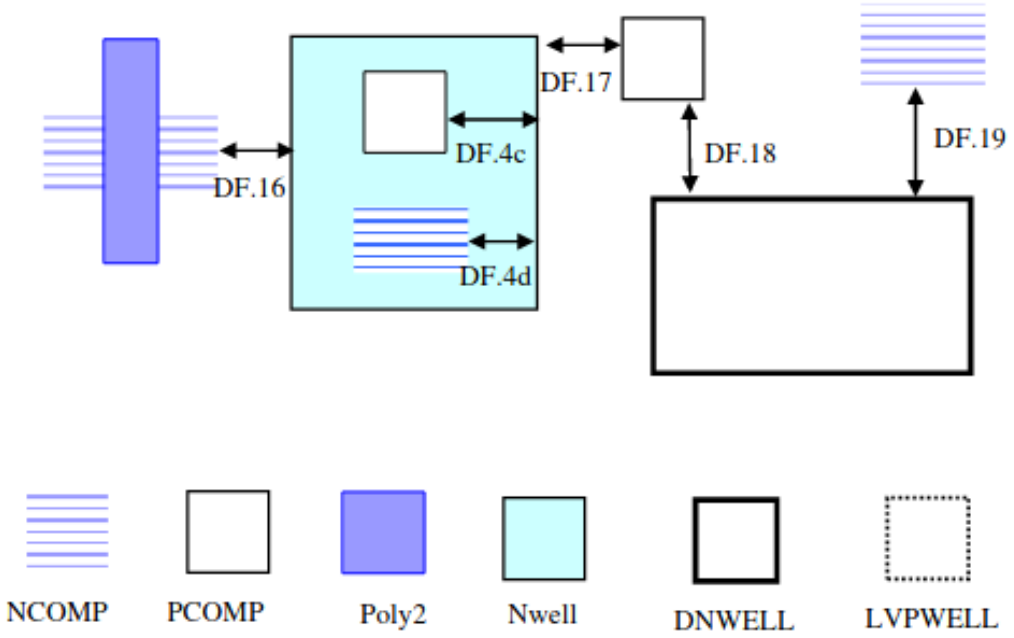

3.3V/(5V)6V CMOS Layout Guideline:

3.3V/(5V)6V CMOS Layout Guideline:

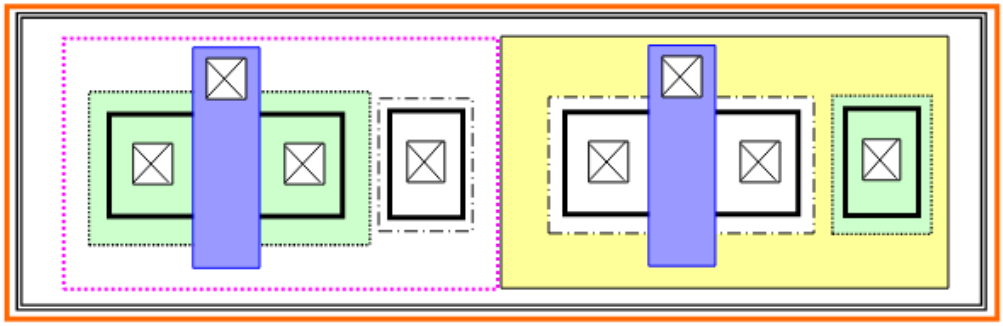

3.3V NMOS inside DNWELL 3.3V PMOS inside DNWELL

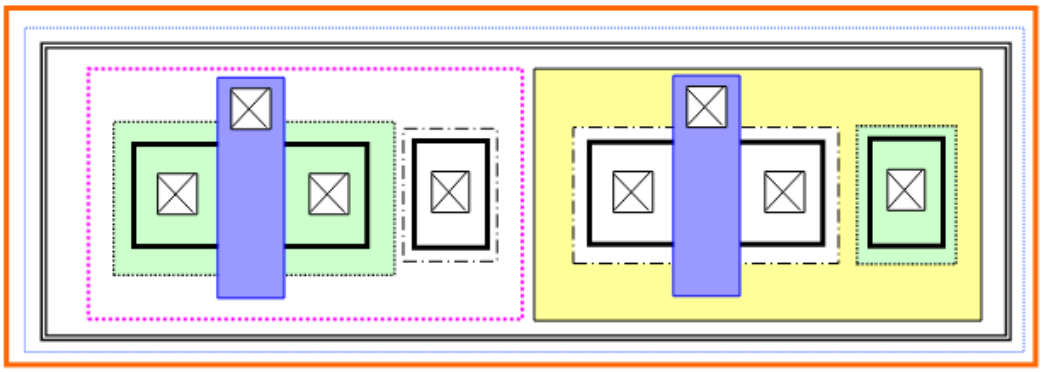

5V/6V NMOS inside DNWELL 5V/6V PMOS inside DNWELL

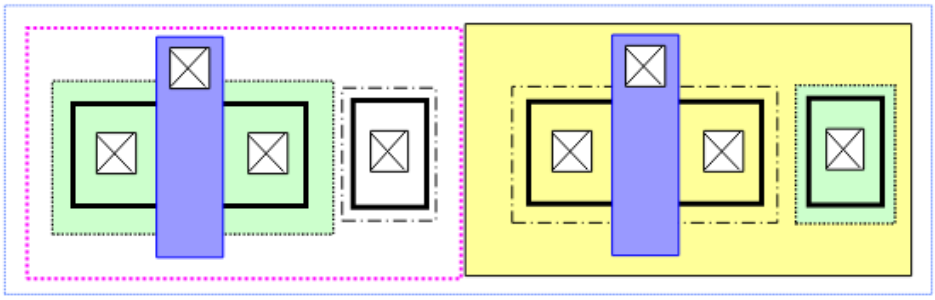

5V/6V NMOS outside DNWELL 5V/6V PMOS outside DNWELL

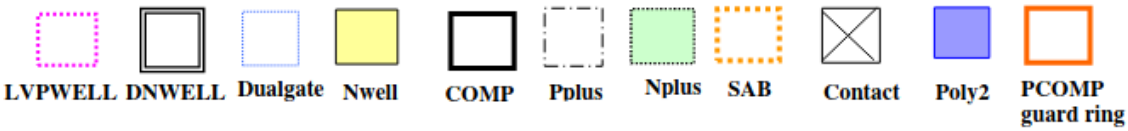

Pplus Diffusion Resistor Layout Guideline:

Note: Refer to individual sections on respective layers for specific rules on drawing resistors.

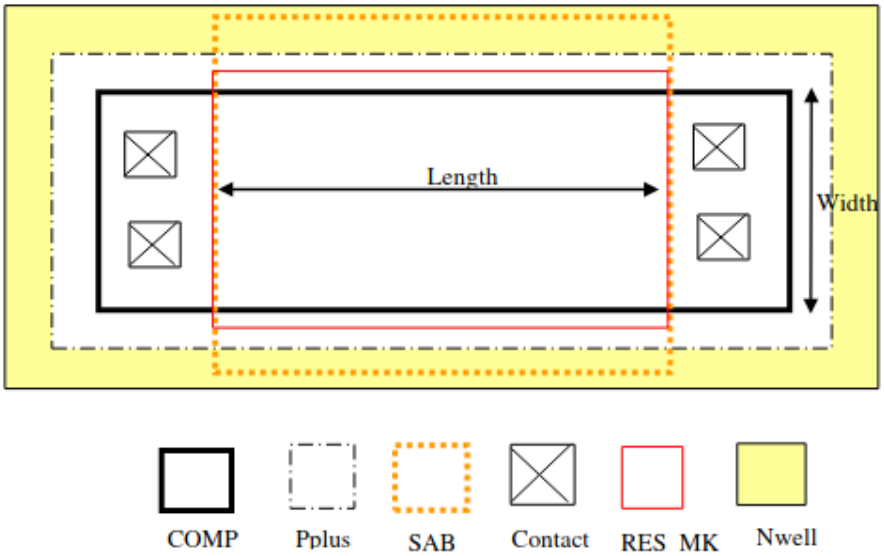

Nplus Diffusion Resistor Layout Guideline:

Note: Refer to individual sections on respective layers for specific rules on drawing resistors.

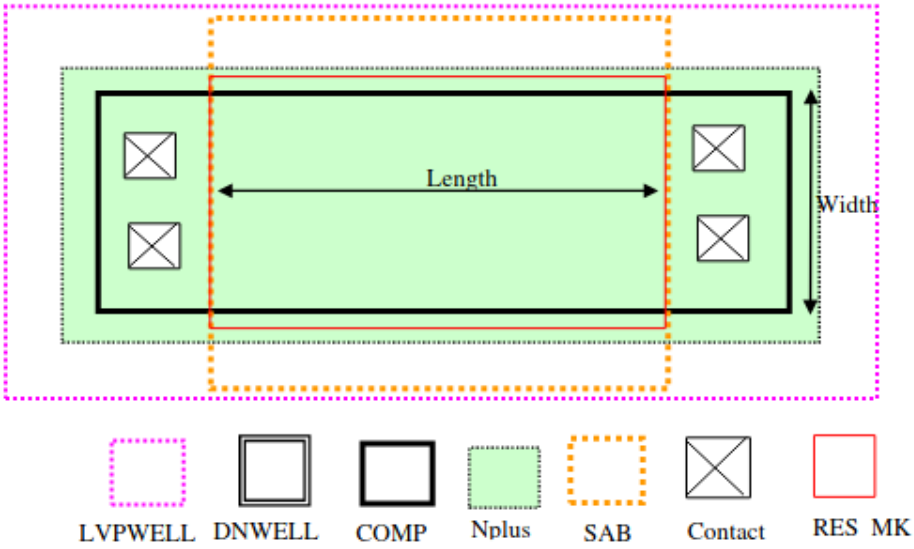

7.6 Dualgate

This layer defines the 5V/6V area. All 5V/6V device area should be covered by this layer.

Table 11: Dualgate RULES

RULE NO.	DESCRIPTION	LAYOUT RULE
Layer	DV = Dual Voltage = Dualgate	
DV.1	Min. Dualgate enclose DNWELL	0.5
DV.2	Min. Dualgate Space. Merge if Space is less than this design rule.	0.44
DV.3	Min. Dualgate to COMP space [unrelated]	0.24
DV.4*	Circuits covered by Dualgate layer will have 5V/6V gate oxide for 5V/6V operation.	

Rules specific to 3.3V/(5V)6V Dualgate outside DNWELL:

RULE NO.	DESCRIPTION	LAYOUT RULE
DV.5	Min. Dualgate width	0.7
DV.6	Min. Dualgate enclose COMP (except substrate tap)	0.24
DV.7	COMP (except substrate tap) can not be partially overlapped by Dualgate	
DV.8	Min Dualgate enclose Poly2	0.4
DV.9	3.3V and 5V/6V PMOS cannot be sitting inside same NWELL	

Note: * *Appendix B: Rules not coded*

* This rule can be detected by ERC, not by DRC

Dualgate (Layer 38)

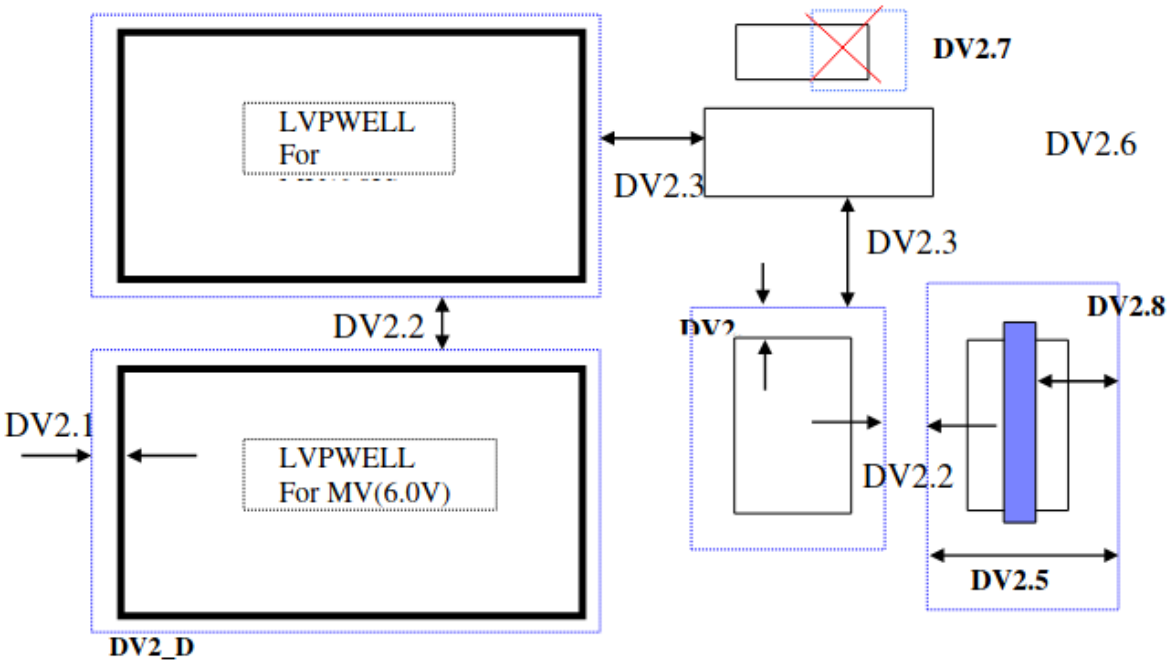

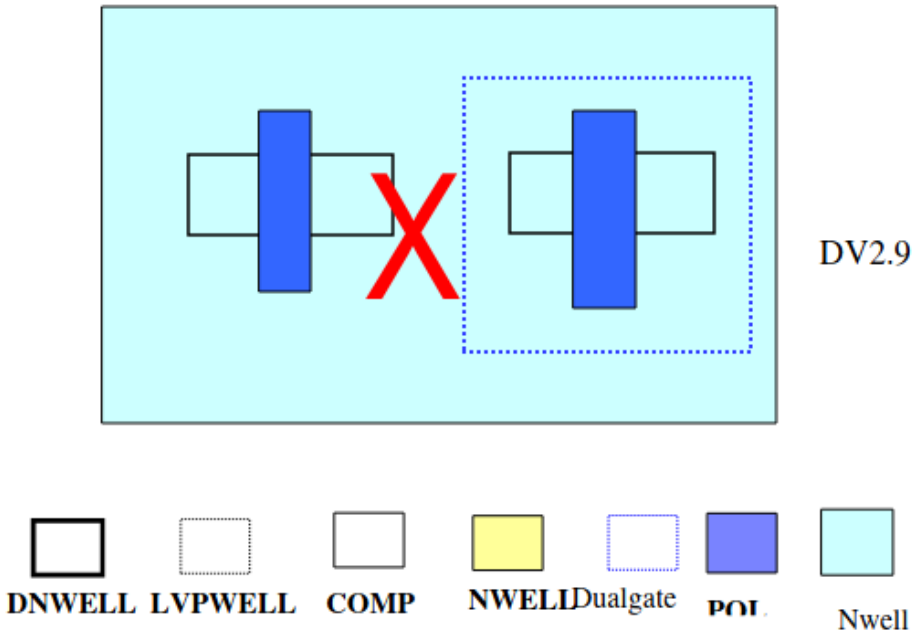

7.7 Poly2

Poly2 defines the Poly2-Gate on CMOS device. The min. channel length for both 3.3V NMOS and PMOS are 0.28um. The min. channel length for 6V NNMOS and PMOS are 0.7um and 0.55um; for 5V are 0.6um and 0.5um.

Table 12: Poly2 RULES

RULE NO.	DESCRIPTION	LAY-OUT RULE		
Layer	PL = Poly2	3.3V	5V	6V
PL.1	Interconnect Width (outside PLFUSE)	0.18	0.2	0.2
PL.1a	Interconnect Width (inside PLFUSE)	0.18	0.18	0.18
PL.2	Gate Width (Channel Length) 1	0.28	0.6/0.5	0.7/0.55
PL.3a	Space on COMP Space on Field	0.24 0.24	0.24 0.24	0.24 0.24
PL.3b*	Poly2 Space on COMP for low active sheet resistivity (guideline)	0.26	0.4	0.4
PL.4	Extension beyond COMP to form Poly2 end cap	0.22	0.22	0.22
PL.5a	Space from field Poly2 to unrelated COMP Spacer from field Poly2 to Guard-ring	0.1	0.3	0.3
PL.5b	Space from field Poly2 to related COMP	0.1	0.3	0.3
PL.6	90 deg bends on the COMP are not allowed			
PL.7	45 deg bent gate width	0.3	0.7	0.7
PL.8	Poly2 coverage over the entire die shall be >= 14% Dummy poly2 lines must be added to meet the minimum poly2 density requirement.			
PL.9	Poly2 inter connect connecting 3.3V and 5V/6V areas (area inside and outside Dualgate) are not allowed. They shall be done though metal lines only.			
PL.10*	Maximum Poly2 current density	1mA/un	1mA/un	1mA/um
PL.11	V5_Xtor must enclose 5V device			
PL.12	V5_Xtor enclose 5V Comp	NA	0	NA

Note: * *Appendix B: Rules not coded*

Note:

1. The min. channel length for 6V NNMOS and PMOS are 0.7um and 0.55um; for 5V are 0.6um and 0.5um.
2. Parasitic capacitance needs to be considered when adding dummy poly2. Customer has the option to use GlobalFoundries's dummy poly2 generation rule. In this case, customer needs to mark out areas of circuit which are sensitive to parasitic capacitance and do not want dummy poly2 fill generated. Customer need to separate circuit Metal1 and Metal2 from dummy metal in order that dummy poly2 can be generated beneath dummy metal. Refer to 4.1 for layer name

Poly2 (Layer 60)

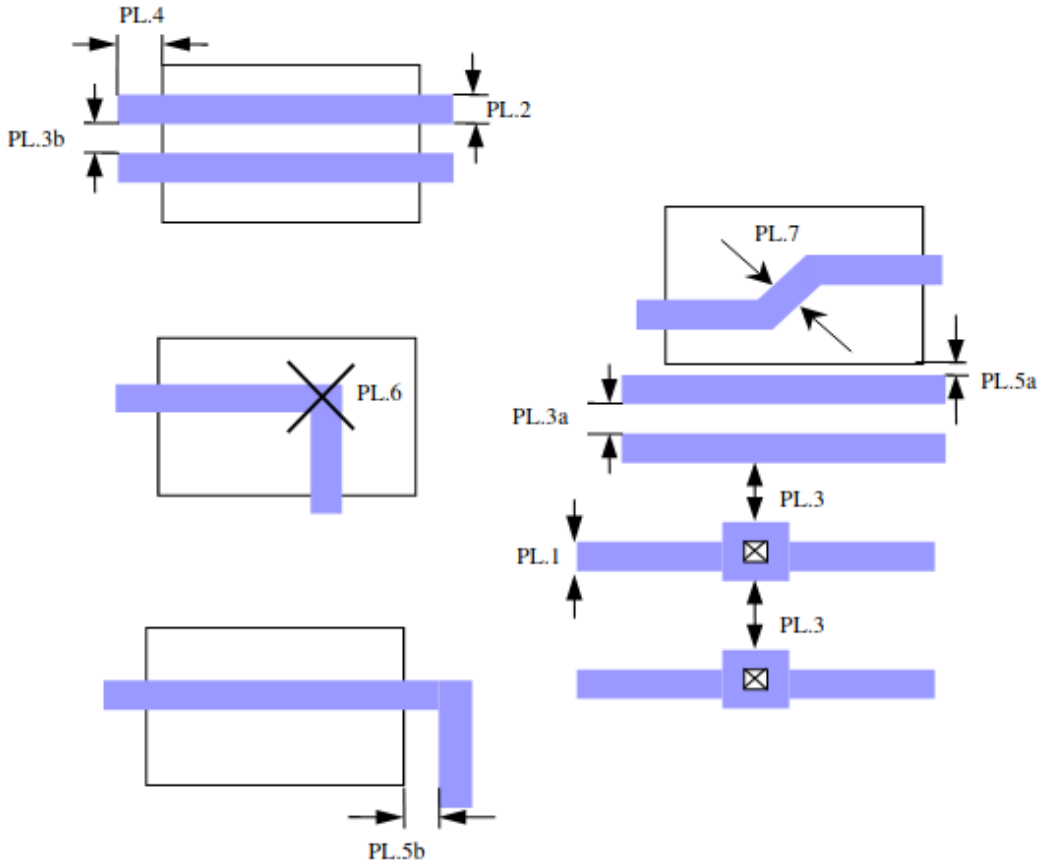

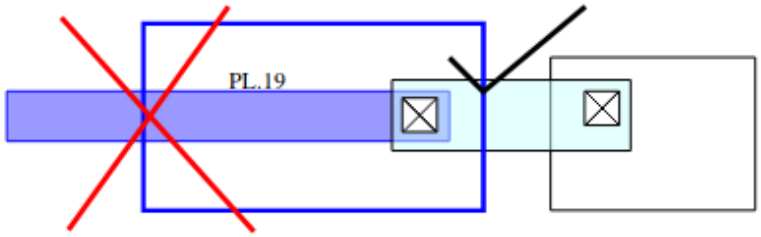

7.8 Nplus

Table 13: Nplus RULES

RULE NO.	DESCRIPTION	LAY-OUT RULE
Layer	NP = Nplus Implant	
NP.1	Width	0.4
NP.2	Space	0.4
NP.3a	Space to PCOMP for PCOMP: (1) Inside Nwell (2) Outside LVPWELL but inside DNWELL	0.16
NP.3b	Space to PCOMP: For Inside DNWELL, inside LVPWELL: I) For PCOMP overlap by LVPWELL < 0.43μm II) For PCOMP overlap by LVPWELL >= 0.43μm	0.16 0.08
NP.3c	Space to PCOMP: For Outside DNWELL: I) For PCOMP space to Nwell < 0.43μm II) For PCOMP space to Nwell >= 0.43μm	0.16 0.08
NP.3d	Min/max space to a butted PCOMP	0
NP.3e	Space to related PCOMP edge adjacent to a butting edge	0
NP.4a	Space to related P-channel gate at a butting edge parallel to gate	0.32
NP.4b	Within 0.32μm of channel, space to P-channel gate extension perpendicular to the direction of Poly2	0.22
NP.5a	Overlap of N-channel gate	0.23
NP.5b	Extension beyond COMP for the COMP (1) inside LVPWELL (2) outside Nwell and DNWELL	0.16
NP.5c	Extension beyond COMP: For Inside DNWELL: I) For Nplus < 0.43μm from LVPWELL edge for Nwell or DNWELL tap inside DNWELL II) For Nplus >= 0.43μm from LVPWELL edge for Nwell or DNWELL tap inside DNWELL	0.16 0.02
NP.5d	Extension beyond COMP: For Outside DNWELL, inside Nwell: I) For Nwell overlap of Nplus < 0.43μm II) For Nwell overlap of Nplus >= 0.43μm	0.16 0.02
NP.6	Overlap with NCOMP butted to PCOMP	0.22
NP.7	Space to unrelated unsalicided Poly2	0.18
NP.8a	Minimum Nplus area	0.35 μm2
NP.8b	Minimum area enclosed by Nplus	0.35 μm2
NP.9	Overlap of unsalicided Poly2	0.18
NP.10	Overlap of unsalicided COMP	0.18
NP.11	Butting Nplus and PCOMP is forbidden within 0.43μm of Nwell edge (for outside DNWELL) and of LVPWELL edge (for inside DNWELL case).	
NP.12	Overlap with P-channel poly2 gate extension is forbidden within 0.32μm of P-channel gate	

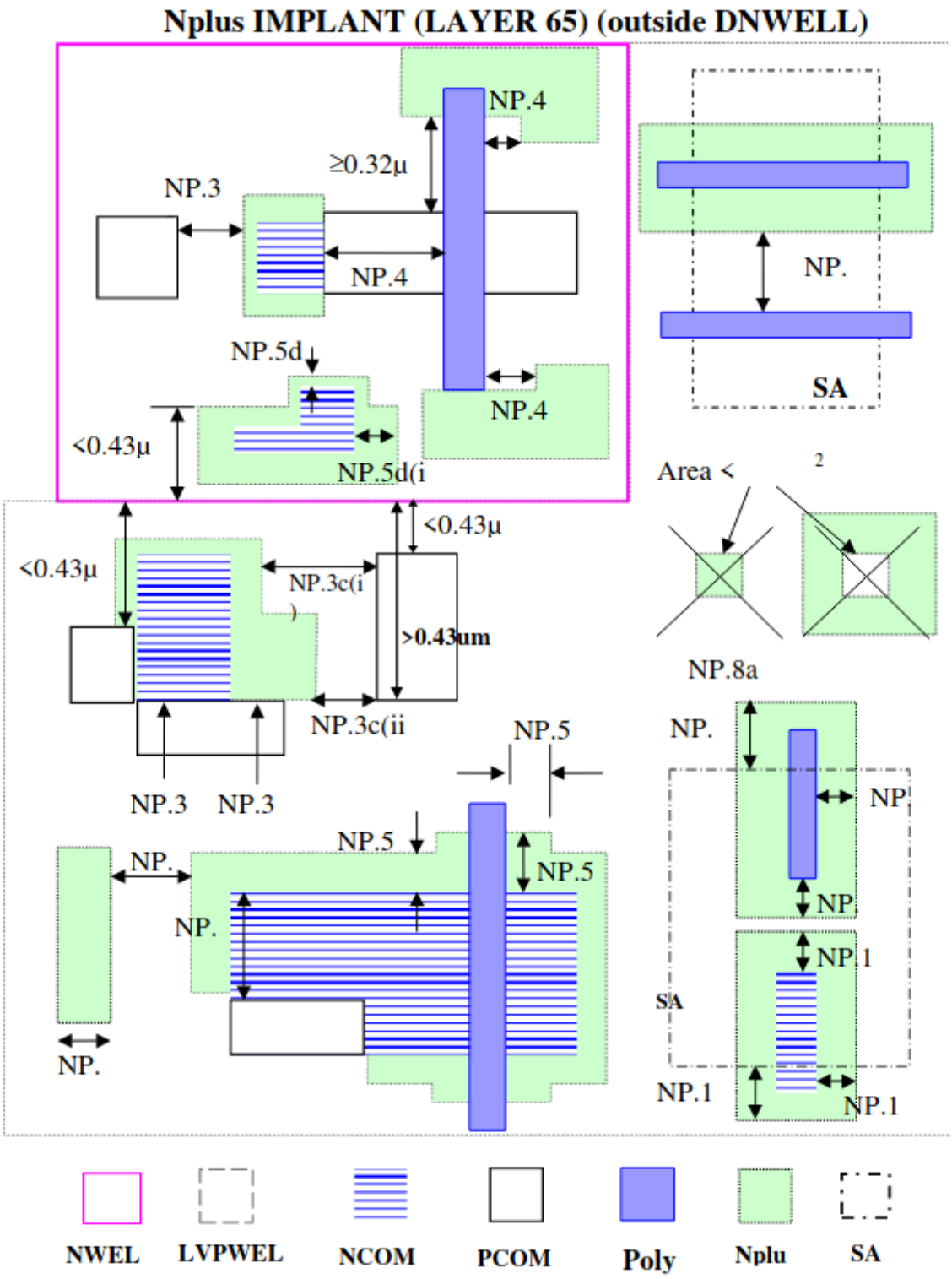
Nplus IMPLANT (LAYER 65) (outside DNWELL)
NP.4
≥0.32µ
NP.3
NP.4
NP.5d
NP.4
<0.43µ
NP.5d(i
NP.
SA
Area <
2
<0.43µ
<0.43µ
NP.3c(i
)
>0.43um
NP.8a
NP.3c(ii
NP.5
NP.
NP
NP.3
NP.3
NP.5
NP.5
NP.
NP.
NP
NP.1
SA
NP.
NP.1
NP.1
NWEL
LVPWEL
NCOM
PCOM
Poly
Nplu
SA

Nplus IMPLANT (LAYER 65)(Inside DNWELL)

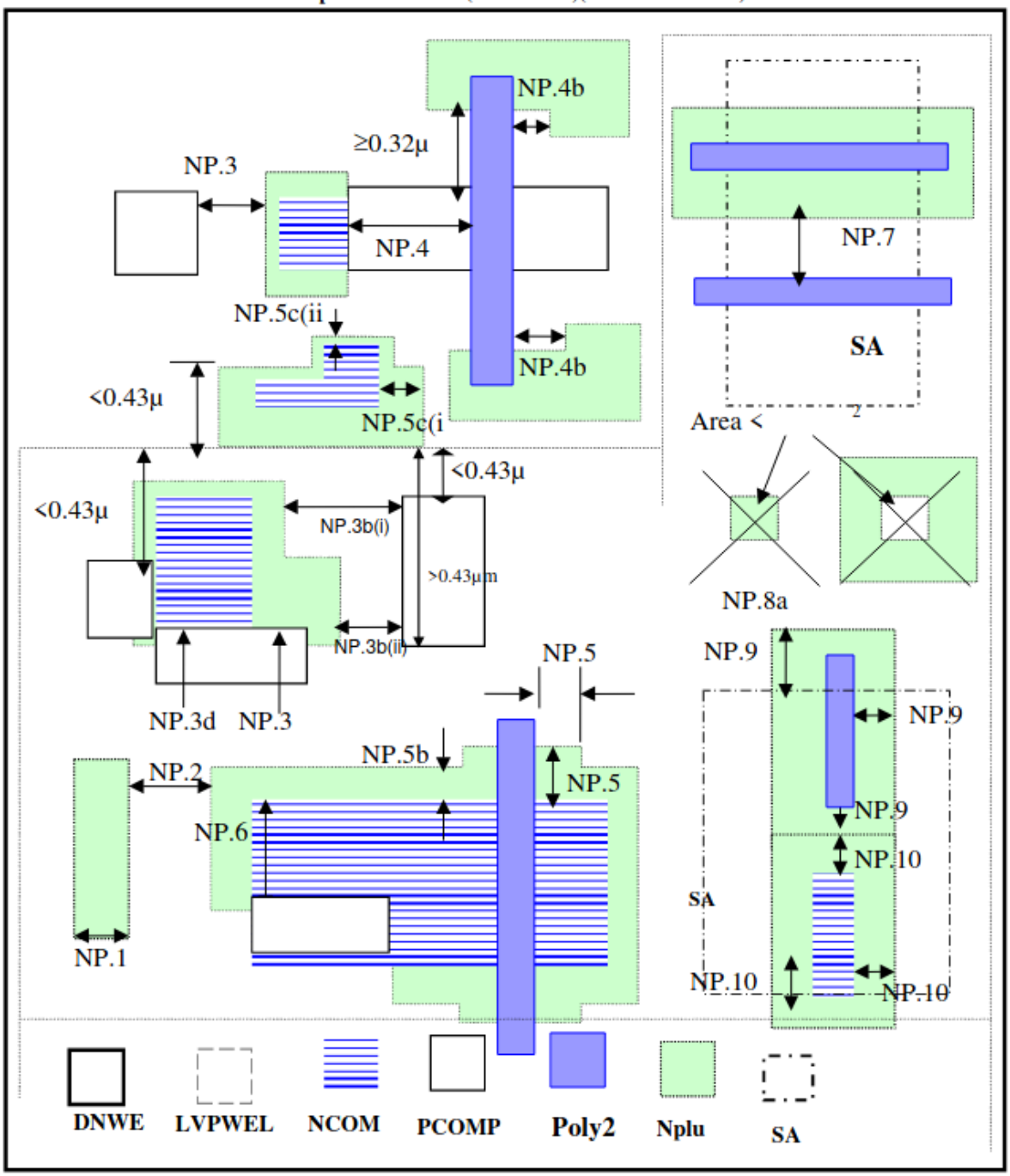

7.9 Pplus

Table 14: Pplus RULES

RULE NO.	DESCRIPTION	LAY-OUT RULE
Layer	PP = Nplus Implant	
PP.1	Width	0.4
PP.2	Space	0.4
PP.3a	Space to NCOMP for NCOMP (1) inside LVPWELL (2) outside NWELL and DNWELL	0.16
PP.3b	Space to NCOMP: For Inside DNWELL. I) NCOMP space to LVPWELL >= 0.43μm II) NCOMP space to LVPWELL< 0.43μm	0.08 0.16
PP.3c	Space to NCOMP: For Outside DNWELL, inside Nwell: I) NWELL Overlap of NCOMP >= 0.43μm II) NWELL Overlap of NCOMP < 0.43μm	0.08 0.16
PP.3d	Min/max space to a butted NCOMP	0
PP.3e	Space to NCOMP edge adjacent to a butting edge	0
PP.4a	Space related to N-channel gate at a butting edge parallel to gate	0.32
PP.4b	Within 0.32μm of channel, space to N-channel gate extension perpendicular to the direction of Poly2	0.22
PP.5a	Overlap of P-channel gate	0.23
PP.5b	Extension beyond COMP for COMP (1) Inside NWELL (2) outside LVPWELL but inside DNWELL.	0.16
PP.5c	Extension beyond COMP: For Inside DNWELL, inside LVPWELL: I) For LVPWELL overlap of Pplus >= 0.43μm for LVPWELL tap II) For LVPWELL overlap of Pplus < 0.43um for the LVPWELL tap	0.02 0.16
PP.5d	Extension beyond COMP: For Outside DNWELL I) For Pplus to NWELL space >= 0.43μm for Pfield or LVPWELL tap II) For Pplus to NWELL space < 0.43μm for Pfield or LVPWELL tap	0.02 0.16
PP.6	Overlap with PCOMP butted to NCOMP	0.22
PP.7	Space to unrelated unsalicided Poly2	0.18
PP.8a	Minimum Pplus area	0.35 μm2
PP.8b	Minimum area enclosed by Pplus	0.35 μm2
PP.9	Overlap of unsalicided Poly2	0.18
PP.10	Overlap of unsalicided COMP	0.18
PP.11	Butting Pplus and NCOMP is forbidden within 0.43μm of Nwell edge (for outside DNWELL) and of LVPWELL edge (for inside DNWELL case).	
PP.12	Overlap with N-channel Poly2 gate extension is forbidden within 0.32μm of N-channel gate	

Pplus IMPLANT (LAYER 70) (outside DNWELL)

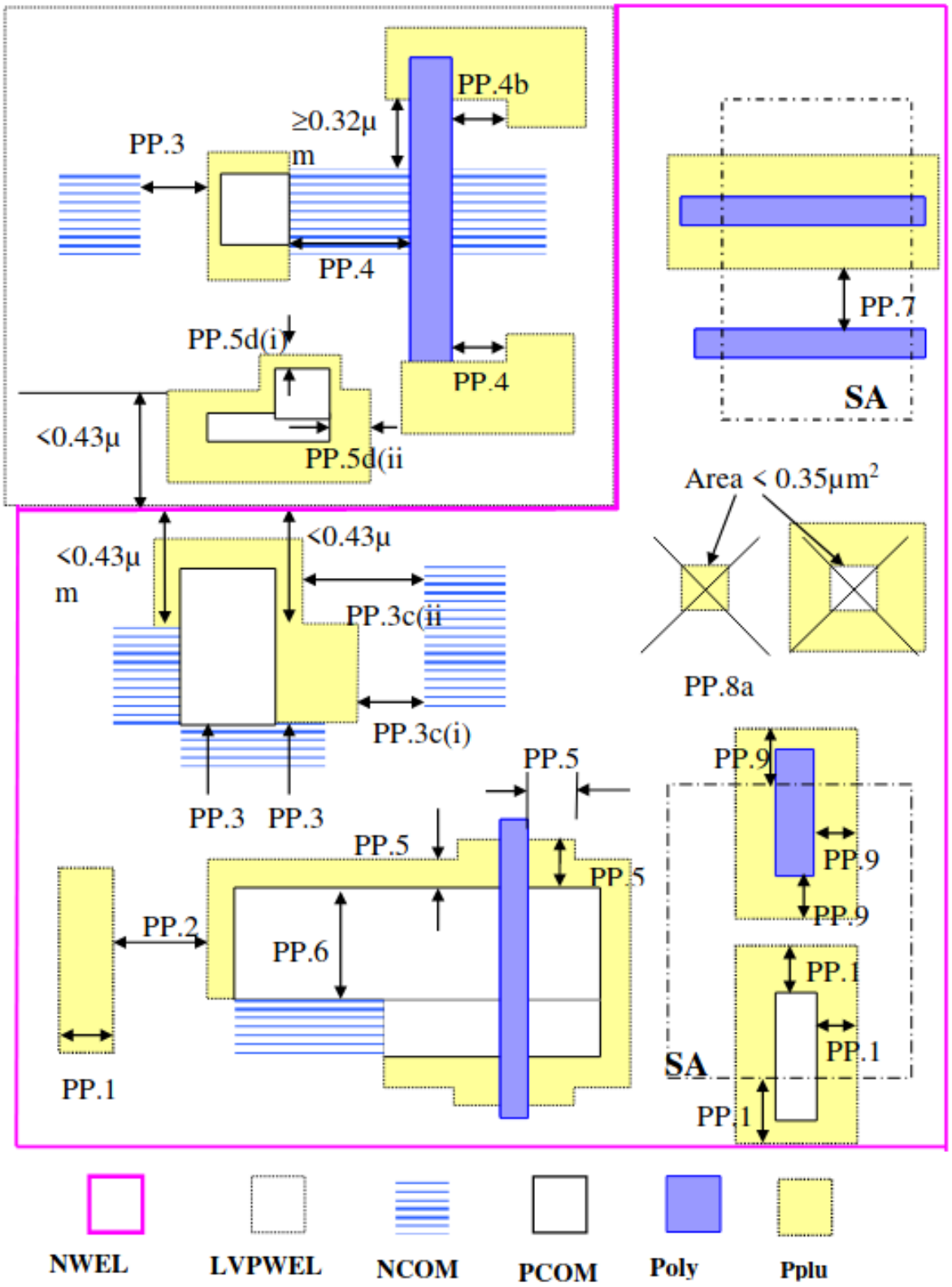

Pplus IMPLANT (LAYER 70) (inside DNWELL)

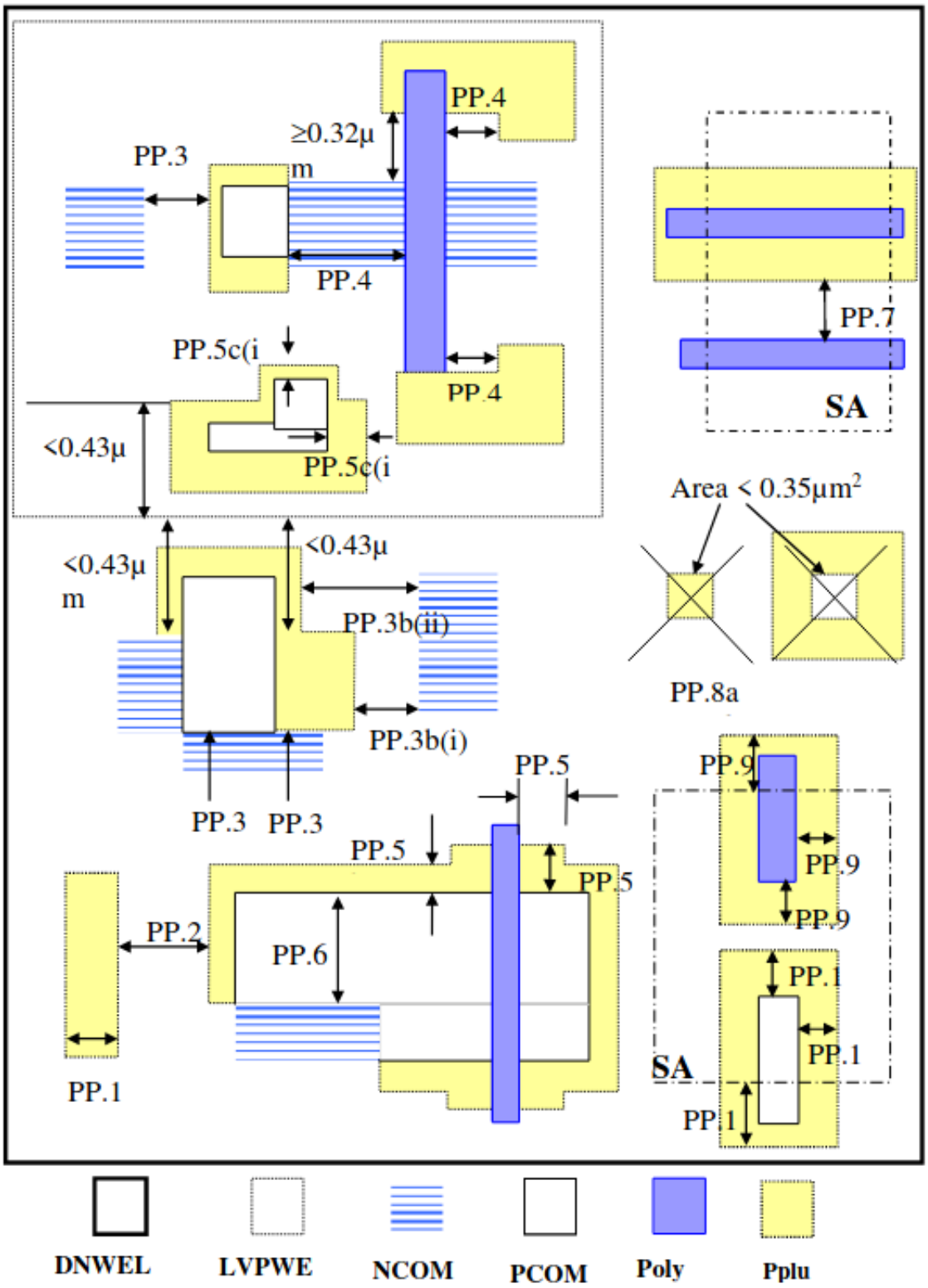

7.10 Salicide Block (SAB)

Table 15: SAB RULES

RULE NO.	DESCRIPTION	LAY-OUT RULE
Layer	SB = Salicide Block	
SB.1	Width	0.42
SB.2	Space	0.42
SB.3	Space from salicide block to unrelated COMP	0.22
SB.4	Space from salicide block to contact	0.15
SB.5a	Space from salicide block to unrelated Poly2 on field	0.3
SB.5b	Space from salicide block to unrelated Poly2 on COMP	0.28
SB.6	Salicide block extension beyond related COMP	0.22
SB.7	COMP extension beyond related salicide block	0.22
SB.8	Non-salicided contacts are forbidden	
SB.9	Salicide block extension beyond unsalicided Poly2	0.22
SB.10	Poly2 extension beyond related salicide block	0.22
SB.11	Overlap with COMP	0.22
SB.12	Overlap with Poly2 outside ESD_MK	0.22
SB.13	Min. area	2.0 μm2
SB.14a	Space from unsalicided Nplus Poly2 to unsalicided Pplus Poly2 (Unsalicided Nplus Poly2 must not fall within a square of 0.56μm x 0.56μm at unsalicided Pplus Poly2 corners)	0.56
SB.14b	Space from unsalicided Nplus Poly2 to P-channel gate (Unsalicided Nplus Poly2 must not fall within a square of 0.56μm x 0.56μm at P-channel gate corners)	0.56
SB.15a	Space from unsalicided Poly2 to unrelated Nplus/Pplus	0.18
SB.15b	Space from unsalicided Poly2 to unrelated Nplus/Pplus along Poly2 line	0.32
SB.16	SAB layer cannot exist on 3.3V and 5V/6V CMOS transistors' Poly and COMP area of the core circuit (Excluding the transistors used for ESD purpose). It can only exist on CMOS transistors marked by LVS_IO, OTP_MK, ESD_MK layers.	

SAB (Layer 68)

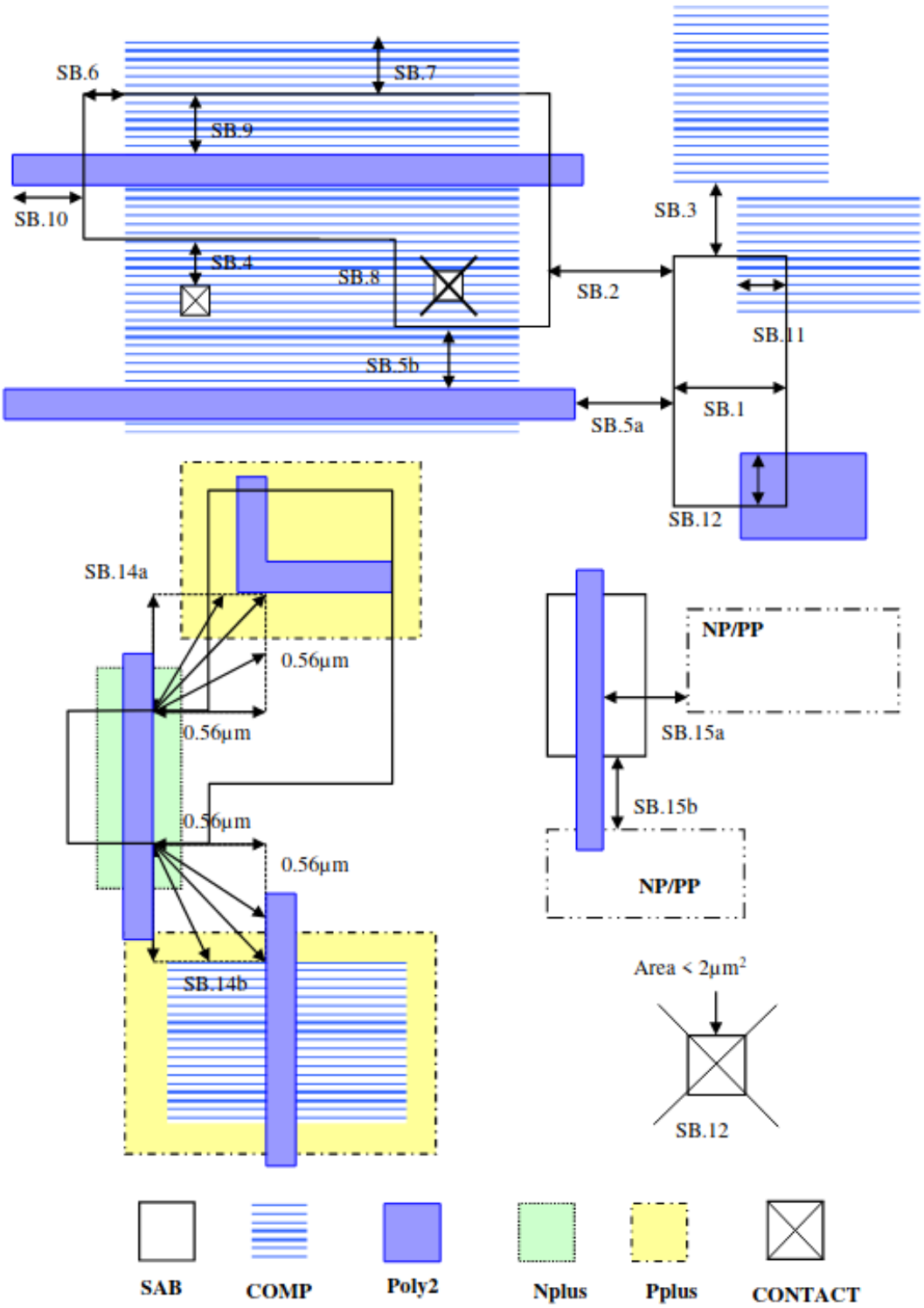
SB.6
SB.7
SB.9
SB.10
SB.3
SB.4
SB.8
SB.2
SB.11
SB.5b
SB.1
SB.5a
SB.12
SB.14a
0.56µm
0.56µm
0.56µm
0.56µm
SB.14b
NP/PP
SB.15a
SB.15b
NP/PP
Area < 2µm²
SB.12
SAB
COMP
Poly2
Nplus
Pplus
CONTACT

7.11 ESD Implant

This is optional for ESD performance improvement of 5V/6V I/O devices only.

Table 16: ESD RULES

RULE NO.	DESCRIPTION	LAYOUT RULE
Layer	ESD = ESD Implant	
ESD.1	Minimum width of an ESD implant area	0.6
ESD.2	Minimum space between two ESD implant areas (Merge if the space is less than 0.6um)	0.6
ESD.3a	Minimum space to NCOMP	0.6
ESD.3b	Min/max space to a butted PCOMP	0
ESD.4a	Extension beyond NCOMP	0.24
ESD.4b	Minimum overlap of an ESD implant edge to a COMP	0.45
ESD.5a	Minimum ESD area	0.49 μm2
ESD.5b	Minimum field area enclosed by ESD implant	0.49 μm2
ESD.6	Extension perpendicular to Poly2 gate	0.45
ESD.7	No ESD implant inside PCOMP	
ESD.8	Minimum space to Nplus/Pplus	0.3
ESD.PL	Minimum gate length of 5V/6V gate NMOS	0.8
ESD.9	ESD implant layer must be overlapped by Dualgate layer (as ESD implant option is only for 5V/6V devices)	
ESD.10	LVS_IO shall be drawn covering I/O MOS active area by minimum overlap	0

ESD Implant (Layer 67)

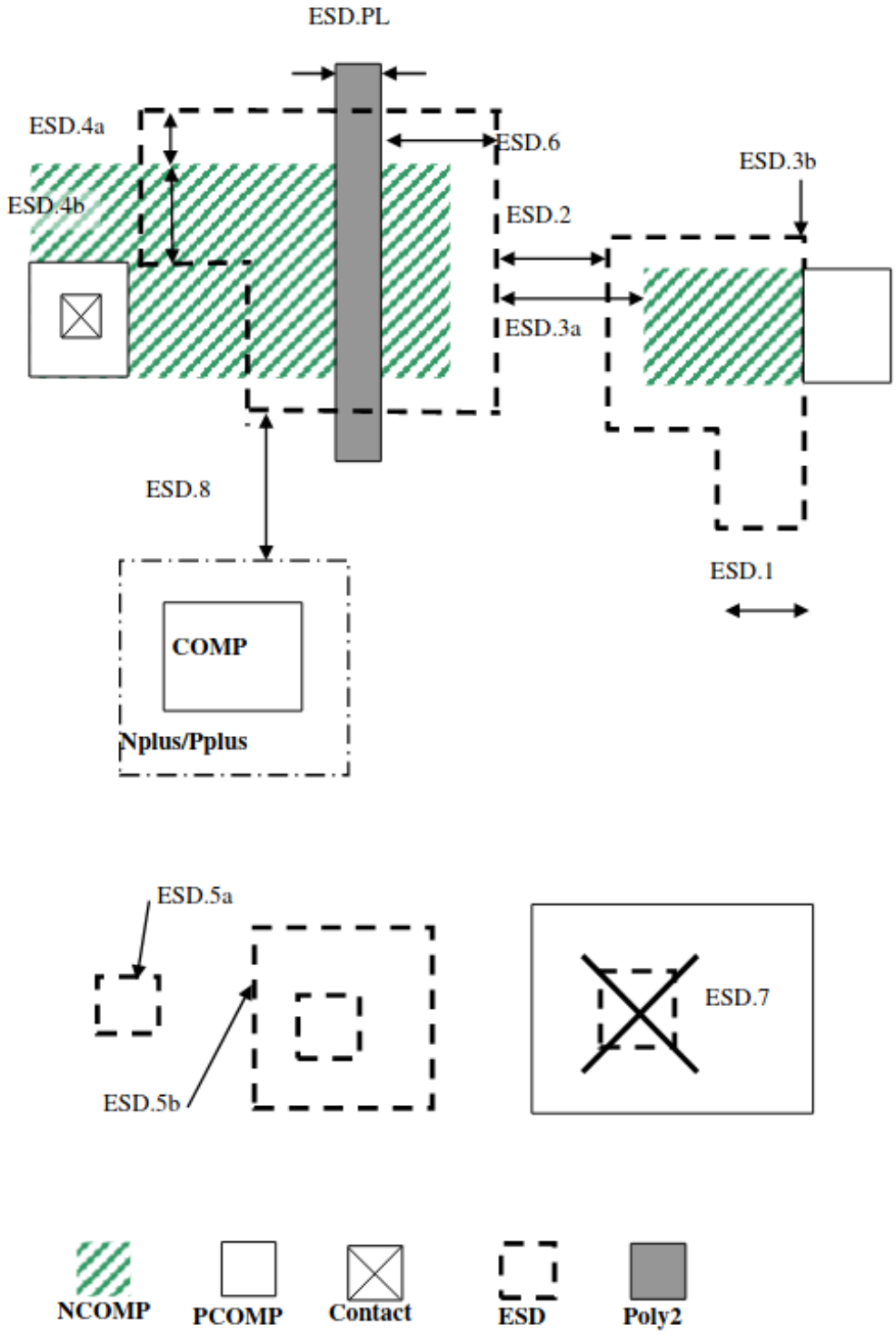

7.12 Contact

Table 17: Contact RULES

RULE NO.	DESCRIPTION	LAY-OUT RULE
Layer	CO = Contact	
CO.1	Min/max contact size	0.22
CO.2a	Space	0.25
CO.2b	Space in 4x4 or larger contact array	0.28
CO.3	Poly2 overlap of contact	0.07
CO.4	COMP overlap of contact	0.07
CO.5a	Nplus overlap of contact on COMP (Only for contacts to butted Nplus and Pplus COMP areas)	0.1
CO.5b	Pplus overlap of contact on COMP (Only for contacts to butted Nplus and Pplus COMP areas)	0.1
CO.6	Metal1 overlap of contact I) Metal1 (< 0.34μm) end-of-line overlap (1) II) If Metal1 overlaps contact by < 0.04μm on one side, adjacent metal1 edges overlap III) Minimum Metal1 overlap of contact on all sides for minimum contact resistance variation* (guideline)	0.005 0.06 0.06 0.12
CO.7	Space from COMP contact to Poly2 on COMP	0.15
CO.8	Space from Poly2 contact to COMP	0.17
CO.9	Contact on NCOMP to PCOMP butting edge is forbidden (contact must not straddle butting edge)	
CO.10	Contact on Poly2 gate over COMP is forbidden.	
CO.11	Contact on field oxide is forbidden.	

Note: * *Appendix B: Rules not coded*

Note:

1. Applies to all < 0.34μm wide metal lines, excluding metal branches shorter than 0.24μm.
2. For better yield and reliability try to avoid single contacts on any layer.

Contact (Layer 75)

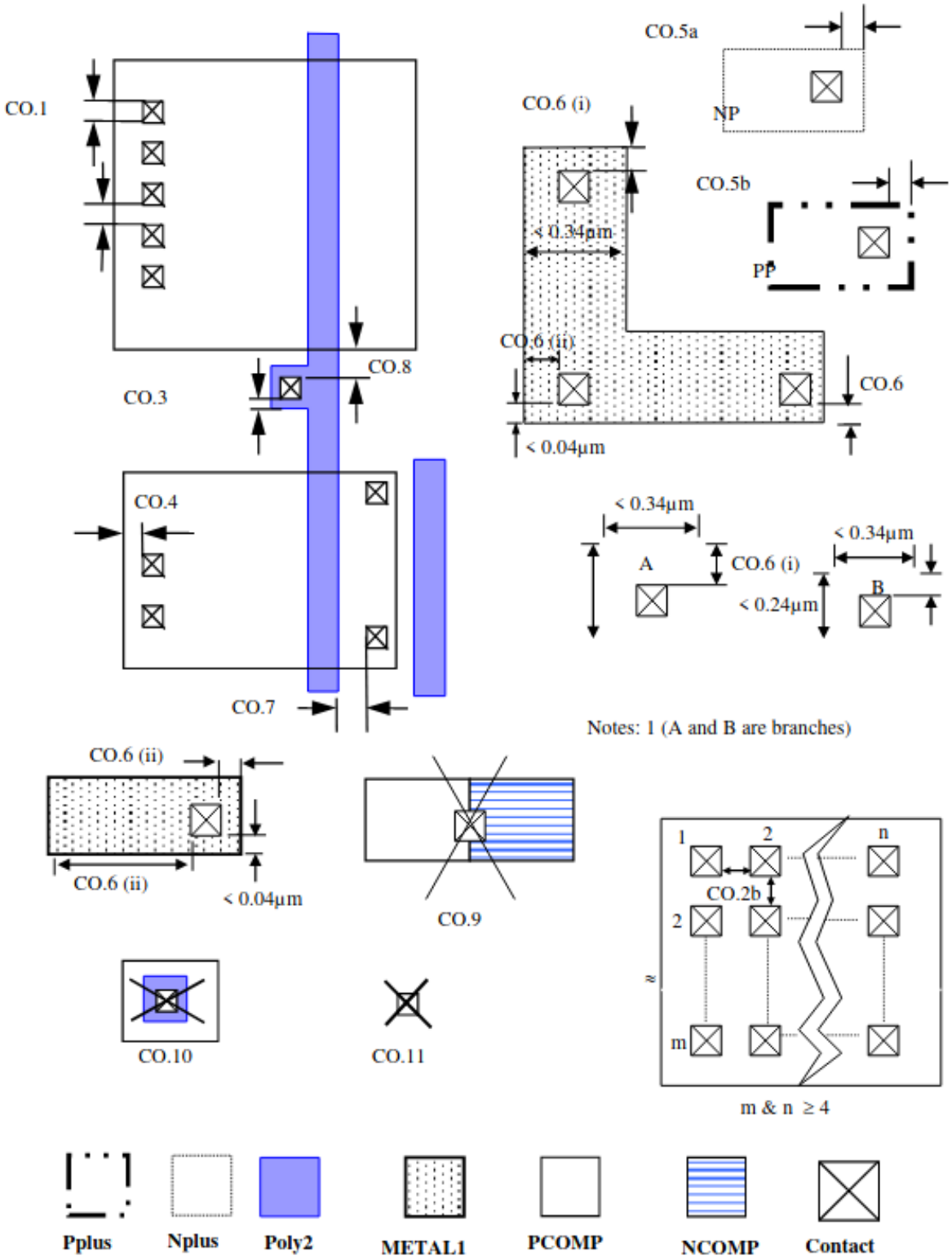

7.13 Metaln (where n = 1 to 5)

Table 18: Metaln RULES

RULE NO.	DESCRIPTION	LAY-OUT RULE
Layer	Mn — Metaln (where n = 1 to 5)	
Mn.1	Width	0.23 (n = 1) 0.28 (2 <= n <= 5)
Mn.2a	Space	0.23 (n = 1) 0.28 (2 <= n <= 5)
Mn.2b	Space to wide Metaln (length & width > 10μm)	0.3
Mn.3	Minimum Metaln area	0.1444 um2
Mn.4	Metaln coverage over the entire die shall be >30% (Refer to section 13.0 for Dummy Metal fill guidelines. Customer needs to ensure enough dummy metal to satisfy Metaln coverage)	

METALn (LAYER 80, 88, 93, 96, 9E)

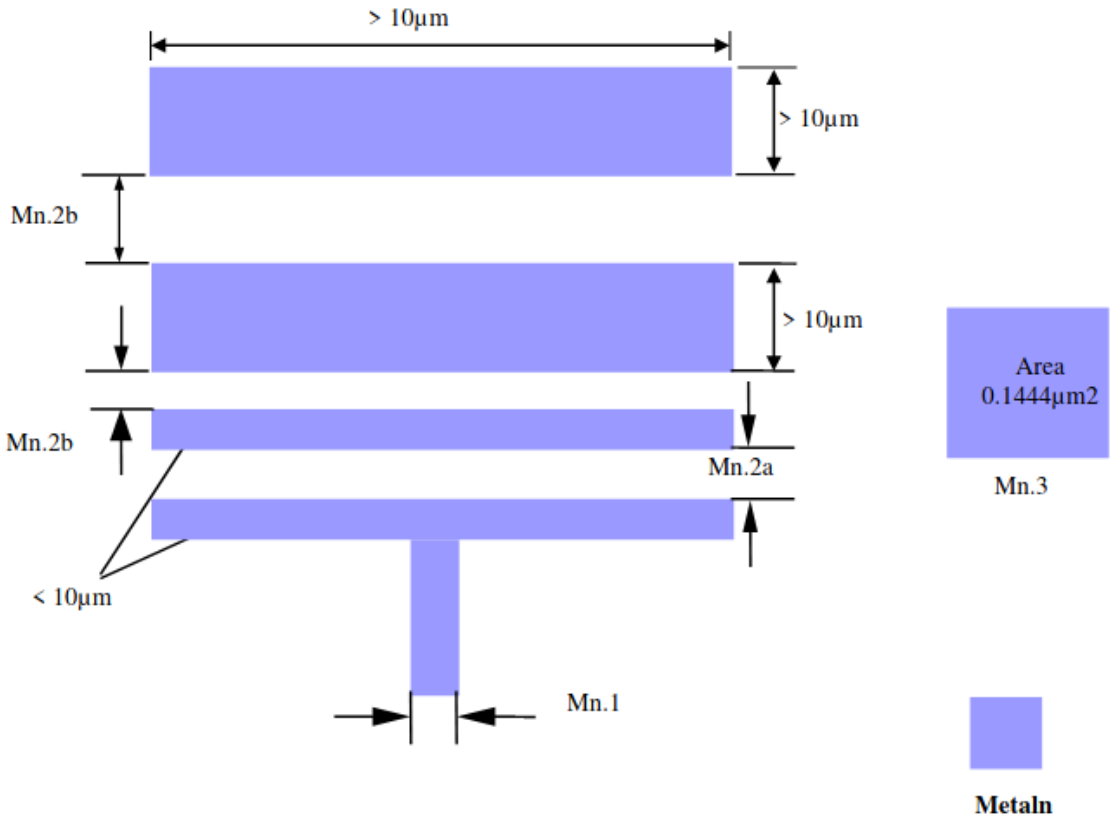

7.14 Vian (where n = 1 to 5)

Table 19: Vian RULES

RULE NO.	DESCRIPTION	LAYOUT RULE
Layer	Vn — Vian (where n = 1 to 5)	
Vn.1	Min/max Vian size (1 <= n <= 5)	0.26
Vn.2a	Space (1 <= n <= 5)	0.26
Vn.2b	Vian Space in 4x4 or larger Vian array	0.36
Vn.3	Metaln (where n=1 to 5) overlap of Vian i. Metaln (< 0.34μm) end-of-line overlap (1) ii. If Metaln overlap Vian by < 0.04μm on one side, adjacent Metaln edges overlap iii. Minimum Metaln overlap of Vian on all sides for minimum Vian resistance variation (guideline)*	0.00 (n = 1) 0.01 (2 <= n <= 5) 0.06 0.06 0.12
Vn.4	Metal [n+1] overlap of Vian i. Metal [n+1] (< 0.34μm) end-of-line overlap1 ii. If Metal [n+1] overlap Vian by < 0.04μm on one side, adjacent Metal [n+1] edges overlap iii. Minimum Metal[n+1] overlap of Vian on all sides for minimum Vian resistance variation (guideline)*	0.01 0.06 0.06 0.12
Vn.5*	Vian stack (2) over contact is permitted	

Note: * *Appendix B: Rules not coded*

Note:

1. Applies to all < 0.34μm wide Metal lines, excluding Metal branches shorter than 0.28μm.
2. Vian is stacked if any portion of it intersects Via [n+1] or Via [n-1], or contact if n=1.
3. For better yield and reliability try to avoid single vias on any layer (put multiple).

Vian (LAYER 85, 91, 94, 97, 9D)

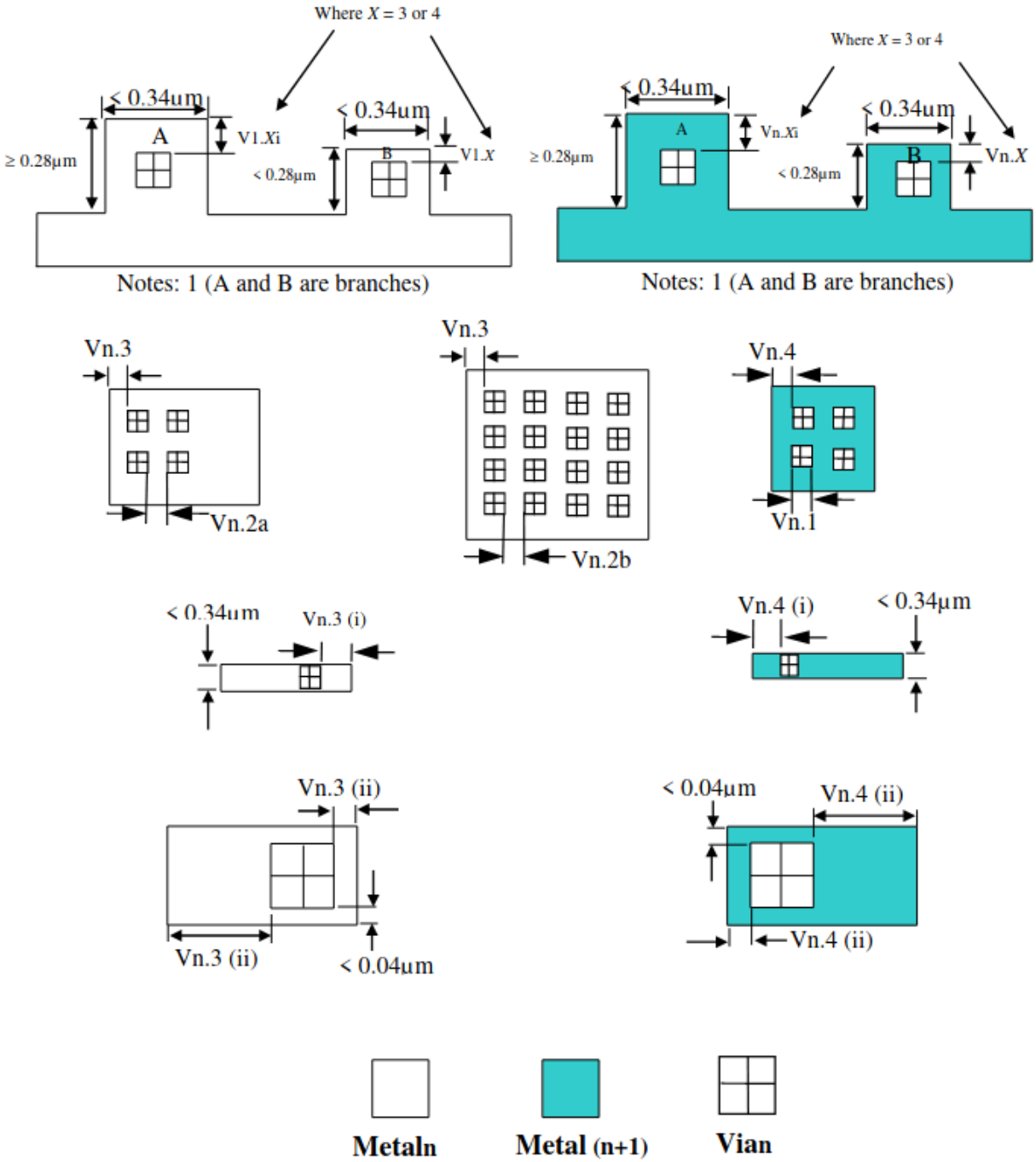

7.15 MetalTop (Thickness 6K/9K*/11K* Å)

Table 20: MetalTop RULES

RULE NO.	DESCRIPTION	LAY-OUT RULE
Layer	MT — MetalTop	
MT.1	Width	0.36/0.44*
MT.2a	Space	0.38/0.46*
MT.2b	Space between wide (length & width > 10um) MetalTop	0.50/0.60*
MT.3	MetalTop coverage over the entire die shall be >30% (Refer to section 10.3 for Dummy Metal-fill guidelines. Customer needs to ensure enough dummy metal to satisfy Metaln coverage)	
MT.4	Minimum MetalTop area	0.5625μm2

Note: * For 9K/11K Å MetalTop.

MetalTop (LAYER 98)

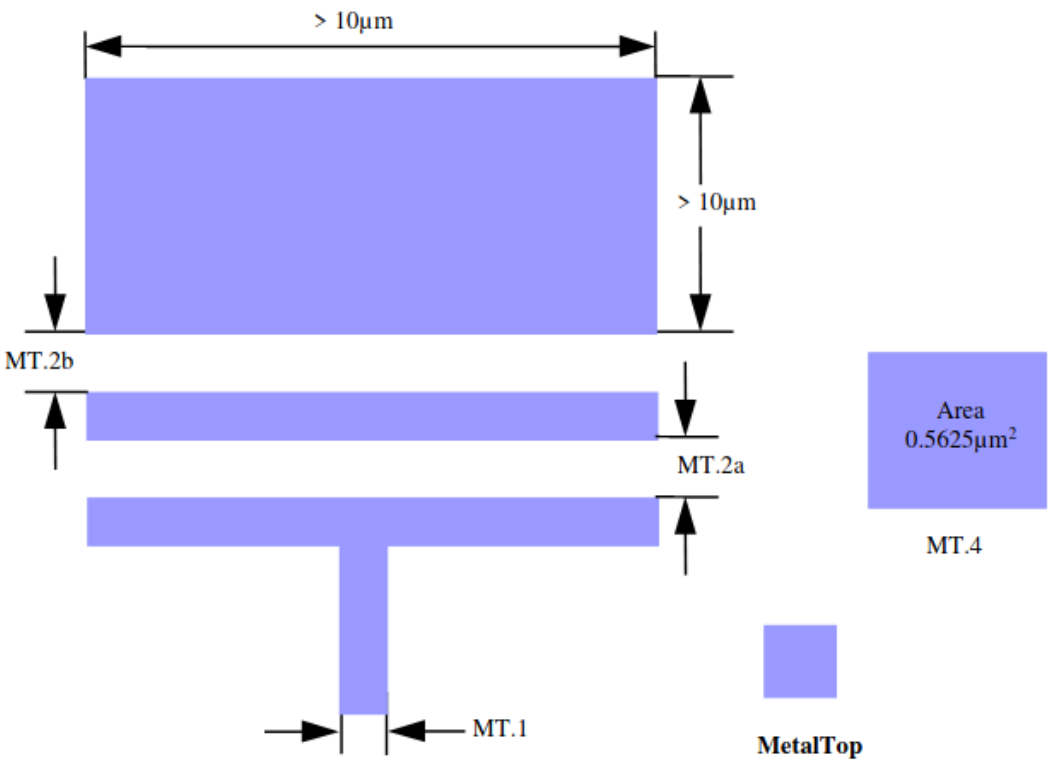

7.16 3.0um Thick MetalTop Option

This section describes the design rules for 3um thick Aluminum MetalTop design rules.

Table 21: 3.0um Thick MetalTop RULES

RULE NO.	DESCRIPTION	LAY-OUT RULE
Layer	MT30 = 3um Metal Top	
MT30.1	(a) Min. thick MetalTop width (b) Min width for >1000um long metal line (based on metal edge)	1.8 2.2
MT30.2	Min. thick MetalTop space	1.8
MT30.3	The separation of two corners should satisfy the minimum spacing	1.8
MT30.4	The separation of single metal line from a any degree metal line should satisfy the minimum spacing	1.8
MT30.5	Minimum thick MetalTop enclose underlying via (for example: via5 for 6LM case) [Outside Not Allowed]	0.12
MT30.6	Thick MetalTop end-of-line (width <2.5um) enclose underlying via (for example: via5 for 6LM case) [Outside Not Allowed]	0.25
MT30.7	Thick MetalTop coverage over the entire die shall be >30% (Refer to section 13.0 for Dummy Metal-fill guidelines. Customer needs to Ensure enough dummy metal to satisfy Metaln coverage)	
MT30.8a	As via size compare to min thick-metal width is very small. Single top via (e.g Via3 for 4 layer metal process with 3.0um thick top metal option. in other words via connecting to thick metal) At one location cannot exit under the thick (3um thick) metal.	DRC check
MT30.8b	There shall be minimum 2X2 array of vias (top vias) at one location connecting to 3um thick top metal. Note: This rule will not checked for seal ring area (identified by GUARD_RING_MK As the via rules in this area are separately covered under seal ring section)	DRC check

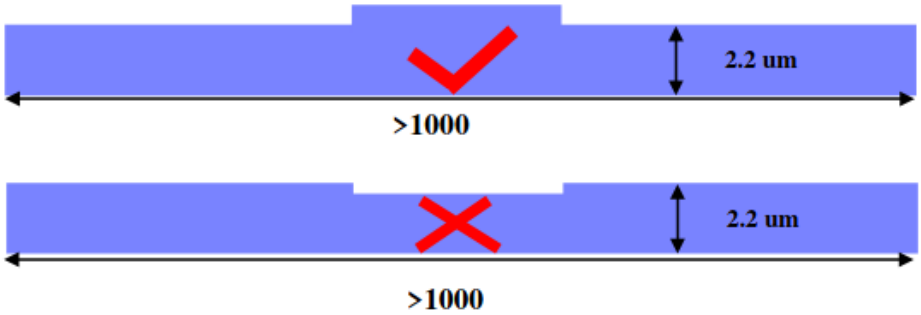

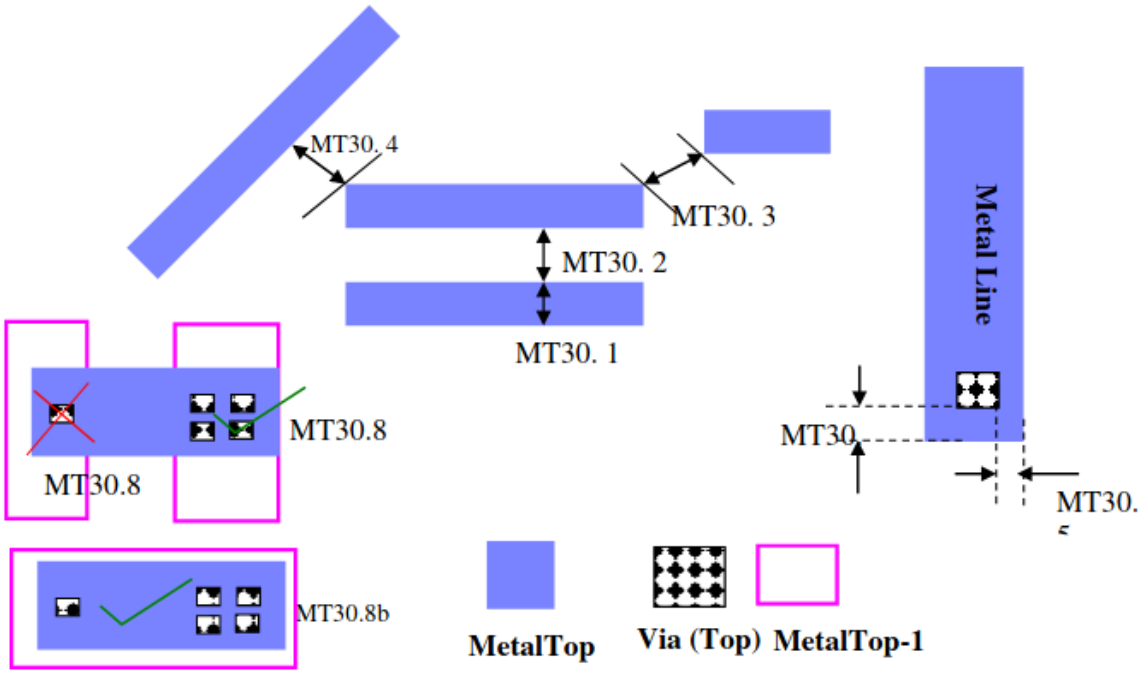

7.17 Mcell

Polarity is Clear

Table 22: Mcell RULES

RULE NO.	DESCRIPTION	LAYOUT RULE
Layer	MC = MTP Cell Implant	
MC.1	Width	0.4
MC.2	Space	0.4
MC.3	Minimum Mcell area	0.35 μm2
MC.4	Minimum area enclosed by Mcell	0.35 μm2

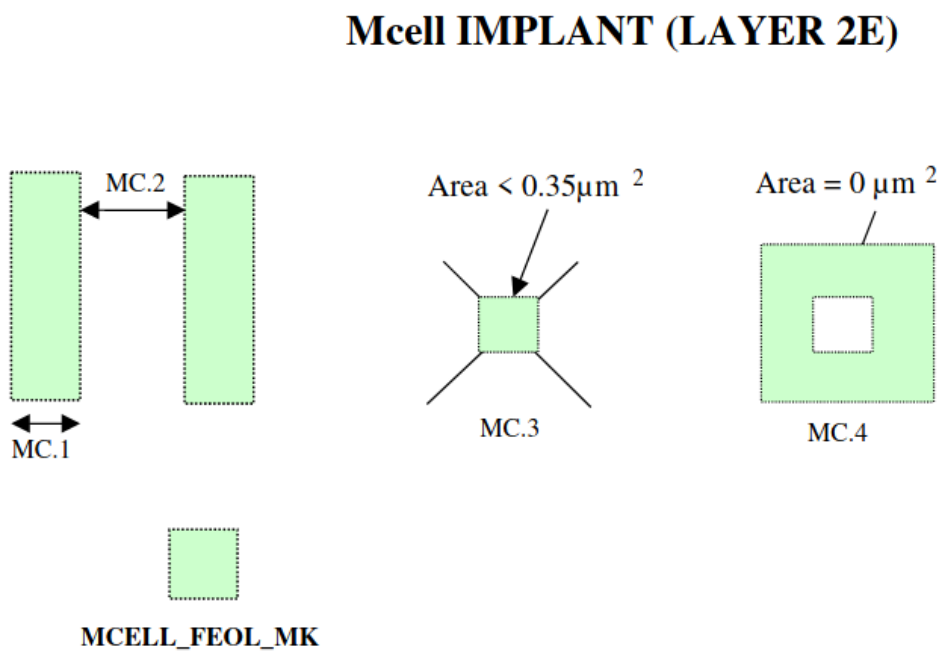

4.1.8 8.0 Antenna Ratio Rules

An antenna includes all conducting structures on the same layer and the same electrical node that connect to an active area only via layers below it.

Table 23: ANTENNA RATIO RULES

RULE NO.	DESCRIPTION	LAY-OUT RULE
Layer	Poly2, Metal1 to MetalTop	
ANT.1	Maximum ratio of Poly2 perimeter area to related gate oxide area	200
ANT.2 (1)	Maximum ratio of Metal1 perimeter area to related gate oxide area	400
ANT.3 (1)	Maximum ratio of Metal2 perimeter area to related gate oxide area	400
ANT.4 (1)	Maximum ratio of Metal3 perimeter area to related gate oxide area	400
ANT.5 (1)	Maximum ratio of Metal4 perimeter area to related gate oxide area	400
ANT.6 (1)	Maximum ratio of Metal5 perimeter area to related gate oxide area	400
ANT.7 (1)	Maximum ratio of MetalTop perimeter area to related gate oxide area	400
ANT.8	Maximum ratio of contact area to related gate oxide area	10
ANT.9 (1)	Maximum ratio of Via1 area to related gate oxide area	20
ANT.10 (1)	Maximum ratio of Via2 area to related gate oxide area	20
ANT.11 (1)	Maximum ratio of Via3 area to related gate oxide area	20
ANT.12 (1)	Maximum ratio of Via4 area to related gate oxide area	20
ANT.13 (1)	Maximum ratio of Via5 area to related gate oxide area	20
ANT.14	If MIM is between Metaln and Metal (n+1), Then: Maximum ratio of each of the metal layer (Metal (n+1) to MetalTop) perimeter area to related MIM area (For example, If MIM is between Metal2 and Metal3, then need to check ANT.14 for M3, M4, … MetalTop to its related MIM)	400
ANT.15	If MIM is between Metaln and Metal (n+1), then: Maximum ratio of each of Via (Vian to most top Via) area to related MIM area (For example, If MIM is between Metal2 and Metal3, then need to check ANT.15 for V2, V3, … most top Via to its related MIM)	20

Note:

1. Possible repairs to metal antenna nodes, which have a high via count or antenna ratio.
   a. Add an NCOMP/Substrate diode for NMOS gate, PCOMP/Nwell diode for PMOS gate.
   b. Break the metal close to the gate and jog the metal to an upper metal level.

Remedy for Antenna Rule violations:

(1) Connecting antenna diode

RULE NO.	DESCRIPTION	LAY-OUT RULE
ANT.16	If any of the above antenna ratio rules fails then the antenna diodes shall be connected in a reverse bias mode between the metal line failing antenna ratio (connected to gate poly or MIM cap top plate) and the substrate underneath. For DRC check if Metaln or Vian fails antenna ratio then it shall check whether this Metaln or Vian is directly connected to COMP through lower level metals, vias and contacts or not? Case (a): Connection to COMP is not present: Flag error Case (b): Connection to COMP is present: Then: (i) For Thin gate case: (COMP AND Poly2 NOT DUALGATE): Treat Gate area = (thin gate area + MF* (COMP area directly connection that node)) This comp area contained the protection diode and any other drain or source junction connected to this node. MF: stand for multiplying factor, for this case MF=2 (ii) For Thick gate case (COMP AND Poly2 AND DUALGATE) Treat Gate area = (Thick gate area + MF* (COMP area directly connection that node)) This comp area contained the protection diode and any other drain or source junction connected to this node. MF: stand for multiplying factor, for this case MF=15 (iii) For MIM Cap case: Treat MIM area = (FuseTop area + MF* (COMP area directly connection that node))(For MIM option-A process) Treat MIM area = (FuseTop area + MF* (COMP area directly connection that node))(For MIM option-B process) This comp area contained the protection diode and any other drain or source junction connected to this node. MF: stand for multiplying factor, for this case MF=15 And check back the validity of antenna ratios as specified in rules ANT.1 to ANT.15.	

(2) Other Possible repairs if the Antenna ratio violate the design rule is break the metal close to the gate and jog the metal to an upper metal level.

ANTENNA RATIO RULES

ANTENNA RATIO RULES

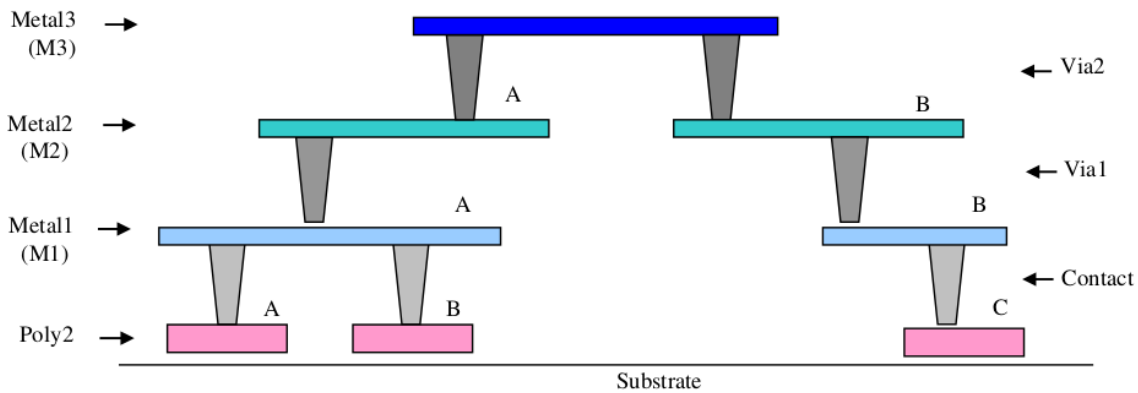

Poly2 or Metal Antenna ratio = (Poly2 or Metal Perimeter Area) / [(Poly2 Gate Area) + M_F (COMP Area directly connected to this gate)]

Contact or Via Antenna ratio = (Contact or Via Area) / (Poly2 Gate Area)

Example:

Illustration on the above antenna ratio calculation: (Terms on the right hand side of the equations below (eg. Metal3) refer to the layout areas of the corresponding structures in the diagram above.)

$$Antenna_ratio(Metal_3) = Metal_3/(Poly_{2A} + Poly_{2B} + Poly_{2C})$$
$$Antenna_ratio(M2A) = Metal_{2A}/(Poly_{2A} + Poly_{2B})$$
$$Antenna_ratio(M2B) = Metal_{2B}/Poly_{2C}$$

Poly2/Metal Perimeter Area calculation

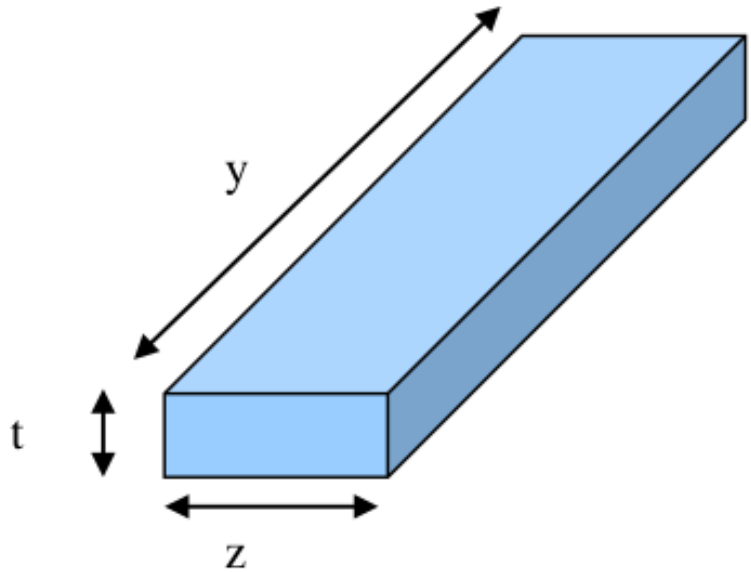

$$Poly2/MetalPerimeterArea = 2[(tXz) + (tXy)]$$

Where

y: Poly2/Metal length

z: Poly2/Metal width

t: Poly2/Metal thickness

	Poly2	Metal1	Metal2	Metal3	Metal4	Metal5	MetalTop (6K Å)	MetalTop.1 (9K Å)	MetalTop.2 (11K Å)	MetalTop.3 (30K Å)
t(um)	0.2um	0.54um	0.54um	0.54um	0.54um	0.54um	0.69um	0.99um	1.19um	3.035um

4.1.9 9.0 Bond Pad

This mask defines the opening where the bond wires connect the circuit to the lead frame. The dimensions of a shrunk circuit after shrink should comply with these rules. The pad is composed of the top layer metal and pad layers. Pad metal is connected to Metal1, Metal2, Metal3, Metal4 and /or Metal5 through Via1, Via2, Via3, Via4 and/or Via5, which are located below the perimeter of the pad metal. Bond pad size and pitch are limited by assembly house.

The bond pad pitch and size should be increased whenever possible, to facilitate bonding and wafer sorting. Wafer sort and assembly capabilities may impose additional constraints. It is the customer's responsibility to take these additional constraints into consideration during layout.

9.1 Bond Pad Rules

This section covers the design rules related to wire-bond and gold bump cases and for solder bump please refer to section 8.0

Table 24: Bond Pad Rules

RULE NO.	RULE NO. DESCRIPTION	Wedge type Wire bond (without CUP)	Ball type Wire bond (with CUP)	Gold bump
LAYER	Pad			
PAD.4	Top layer metal overlap of pad opening		2	

9.2 Bond Pad Guidelines

Table 25: Bond Pad Guidelines

GUIDE-LINE NO.	DESCRIPTION	Wedge type Wire bond (without CUP)	Ball type Wire bond (with CUP)	Gold bump
Layer	Pad			
PAD.1	Pad opening1	40	40	4
PAD.2	Pad opening to pad opening (1)	9	9	9
PAD.5	MetalTop (2) overlap of Top_Via (3)	0.5	0.5	0.5
PAD.6	MetalTop-1 (4) overlap of Top_Via (3)	0.5	0.5	0.5
PAD.7	Metal5 overlap of Via4	0.5	0.5	–
PAD.8	Metal4 overlap of Via4	0.5	0.5	–
PAD.9	Metal4 overlap of Via3	0.5	0.5	–
PAD.10	Metal3 overlap of Via3	0.5	0.5	–
PAD.11	Metal3 overlap of Via2	0.5	0.5	–
PAD.12	Metal2 overlap of Via2	0.5	0.5	–
PAD.13	Metal2 overlap of Via1	0.5	0.5	–
PAD.14	Metal1 overlap of Via1	0.5	0.5	–
PAD.15	Min pad opening space to nearest S/L guard ring (Inner edge of GUARD_RING_MK marking)	30	30	30
PAD.16	Max pad opening space to nearest S/L guard ring (Inner edge of GUARD_RING_MK marking)	200	200	NA
PAD.17	Pad opening space to active circuit COMP	15	NA	NA
PAD.18	Pad opening space to active circuit Poly2	15	NA	NA
PAD.19a	Pad opening to non-pad circuit Metal1, 2, 3, 4,5 Up to MetalTop-1	6	NA	NA
PAD.19b	Pad opening to non-pad circuit MetalTop	6	6	6
PAD.20	Pad metal to pad metal space	5	5	5
PAD.21	FOR other rules specific to CUP (circuit under pad Case) refer to section 9.3			

Note:

1. These are just default numbers for DRC purpose only, however, these are VARIABLE and the customer is advised to use the appropriate value acceptable to their assembly house.
2. MetalTop is the last Metal of the product, for 4 layer metal product, MetalTop is Metal4.
3. Top_Via: means the top most via for the product, For 6 layer metal product, Top_via will be Via5, while for 4 layer metal product, Top_Via will be Via3.
4. MetalTop-1: means the one level lower than the last metal layer, For 6 layer metal product, MetalTop-1 will be Metal5, while for 4 layer metal product, MetalTop-1 will be Metal3.
5. Those Via under Pad opening oversize by rule PAD.4 but exlcuding PAD will be checked by this rule.
6. For wedge type pad metal is checked by metal1 to MetalTop interact with pad enclosed by Pad opening oversize by rule PAD.4, for ball type wire bond (with CUP) and gold bump, pad metal checked by MetalTop oversize by rule PAD.4 .
7. Not recommended to use 6k top metal for cu wire bonding.

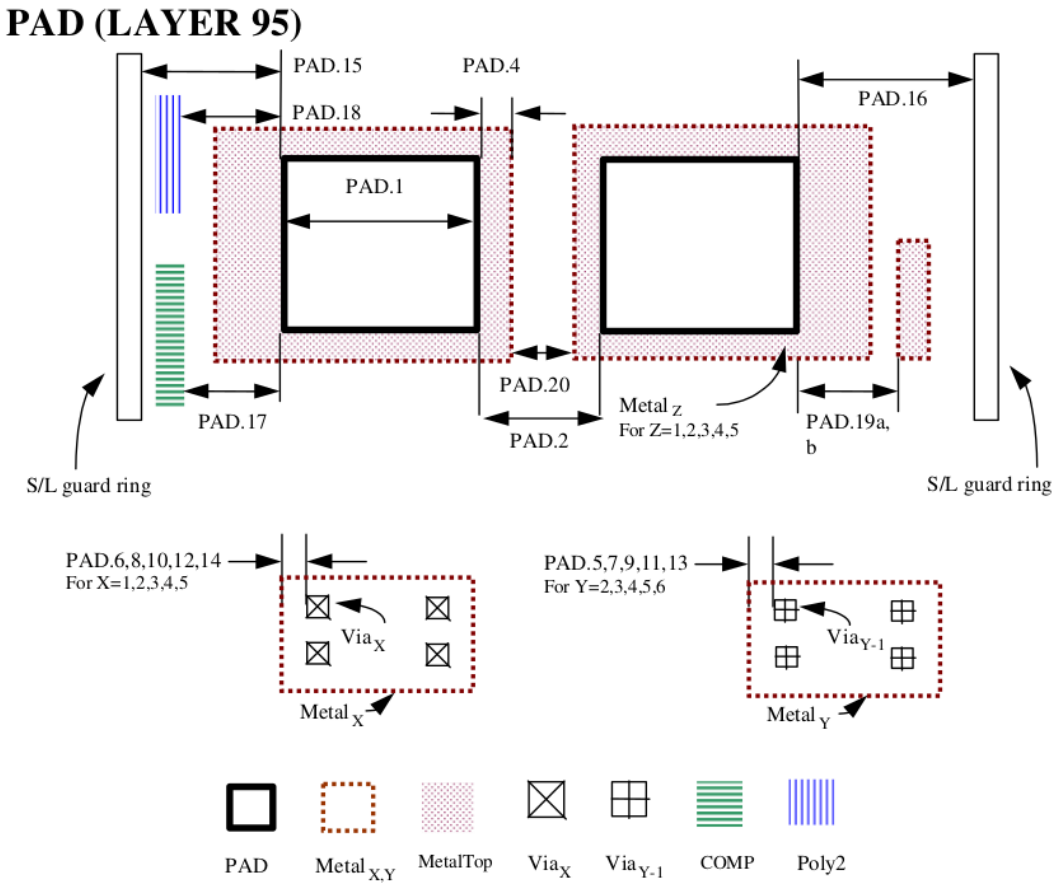

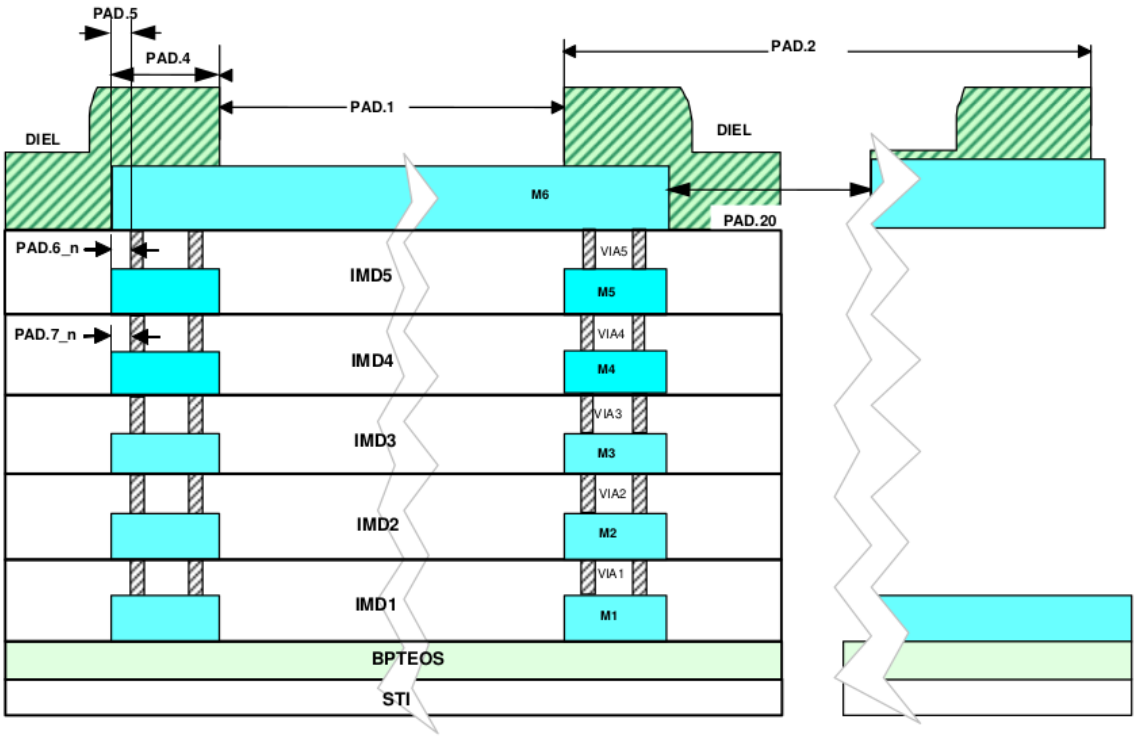

9.3 Circuit-Under-Pad (CUP) Rules

Active circuits are allowed when ball-type wire-bonding process is used and when bumping/flip chip technology is used. No circuit under pad is allowed when wedge-type wire-bonding process is used. The following additional rules apply to designs when active circuits are used under the pad.

Note: It is strongly recommended to optimize the bonding parameters (bond force, time and power) when using CUP for the first time in the design. Bonding parameters used for pads with no circuits underneath the pad may not necessarily be optimized for CUP application. After performing a design of experiments with bonding parameters, wire-pull and ball-shear tests should be performed to ensure mechanical stability of CUP bond pads (no lift-off or cratering of balls for optimized bonding parameters). Cross section of pad area should be taken to make sure that there is no crack underneath the bond pad. By following the design rules described in this section, robust CUP designs can be achieved but because bonding parameters may differ from one assembly house to the other, some optimization may be necessary for CUP bond pads when used for the first time.

Table 26: CUP Rules

Rule NO.	DESCRIPTION	Ball type Wire bond	Solder bump/Gold bump
CUP.1	All FEOL are allowed to be below Pad region (except the items stated in CUP.4).	Per Design Manual	Per Design Manual
CUP.1a	CUP is not allowed for Wedge-type Wire bond case.		
CUP.2	Minimum width of the metal line used for bond pads	1	NA
CUP.3	Minimum space of the metal line used for bond pads (slots)	1	NA
CUP.4[1] (1)	Circuits currently not allowed under bond pad are: - Devices sensitive to strain (eg: silicon band-gap references) - Matched pair devices like transistors, resistors and capacitors For precision analog application. - All RF components	Guideline	Guideline
CUP.5	Top vias directly underneath the pad opening	Not Allowed	NA
CUP.6	However it is good to have a ring of top vias connected around the pad opening to MetalTop-1 with min top via space to pad opening:	0.5	NA
CUP.7	a) Guideline: Metals underneath pad shall be in the form of stripes which Should be aligned parallel to the expected current flow during normal operation and ESD condition. Refer Fig.CUP7(a)		
	b) Guideline*: If orthogonal current flow is required crosshatched Metal grids with similar line and space may be used. Refer Fig.CUP7(b)		
	c) Vias shall be in the form of cluster or arrays (<=3x3). Sea of Via (>3x3 array) is not allowed. Refer Fig.CUP7(c)		
	d) Min via space in via arrays	0.3	NA
	e) Min space between via arrays	0.5	NA
	f) Guideline: Individual top vias (Space = 1.3um) may be used under pad open area. Refer Fig.CUP7(f)		
CUP.8	Top_Via-1 (2) directly underneath the Pad mask	Not Allowed	NA
CUP.8a	Top_Via-1 (2) under the top metal with min top_Via-1 (2) space to pad opening	0.5	NA
CUP.9	1LM, 2LM and 3LM process with CUP.	Not Allowed	NA

Note: * *Appendix B: Rules not coded*

Note:

1. This rule cannot be checked by DRC deck; this is just a guideline to the layout engineer to take care.
2. Top_Via-1: is the one level lower via than top most via, for 6 layer metal product, Top_Via-1 is Via4, for 4Layer metal product, Top_Via-1 is Via2.

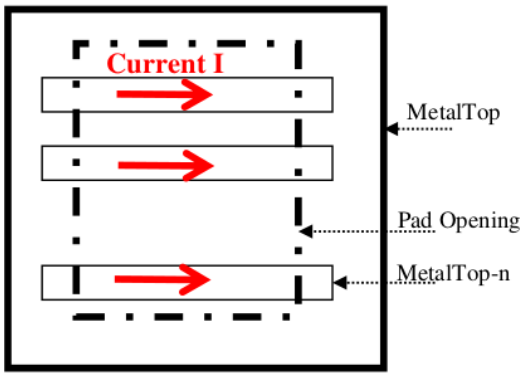

Fig CUP7 (a)

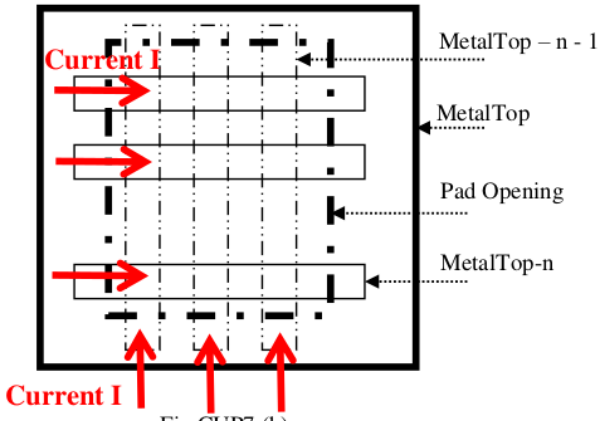

Fig CUP7 (b)

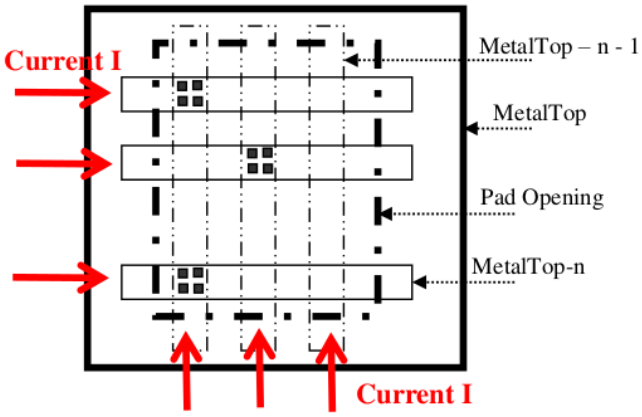

Fig CUP7 (c)

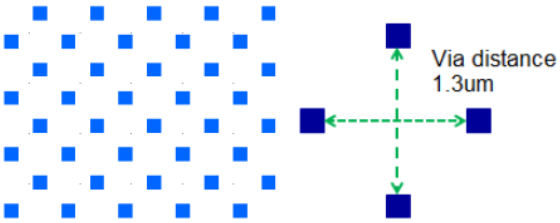

Fig CUP7(f)

9.4 Guidelines For Solder Bumping Technology

The purpose is to outline the basic wafer bumping design rules for GlobalFoundries' wafers using GlobalFoundries Turn-Key outsource wafer-bumping subcontractor. The scope is all GlobalFoundries wafers designed to be solder bumped for flip chip application.

9.4.1 Bump Design guidelines

There are two types of final passivation schemes for solder bumping. One is solder bump with Nitride passivation and the other is solder bump with polyimide passivation. Standard under bump metallurgy (UBM) structure is shown in Figure 1.0.

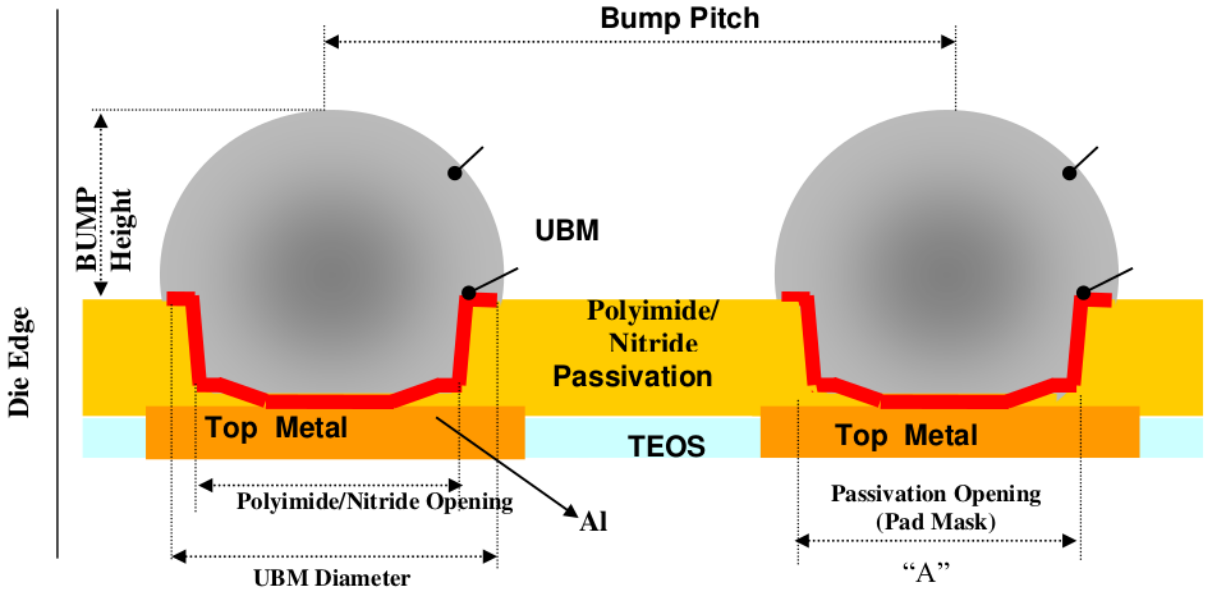

Fig. 1: Figure 1.0 Typical bump structure and terminology

9.4.2 General Information

1. All dimensions in this document are minimum specifications unless otherwise stated.
2. Bump pitch is defined as the centre-to-centre distance between passivation openings.
3. Bump height is the distance from the bump centre top to the passivation surface. It provides sufficient solder volume to obtain the required standoff for under filling the flip chip die mounted onto substrate or PCB board and also for solder joint reliability. The solder bump height is a function of bump pitch and UBM diameter.
4. Under bump metallurgy (UBM) is the bump base adjacent to the solder bump and provides:
    - Control size of solder bump
    - Electrical contact to the pad metal/aluminum pad
    - Adhesion layer to the passivation and pad metal/aluminum pad
    - Wetting layer for the solder
    - COMP barrier to the pad metal/aluminum pad

It is recommended a minimum overlap of UBM to passivation of 10um to provide a robust and reliable bump structure during package or board reliability.

9.4.3 Solder Bump Pad design guidelines

This section contains the bumping design guidelines for flip chip applications

Top Metal (Al)

Table 27: Top Metal (Al)

NO.	DESCRIPTION	LAYOUT RULE
TM.1	Passivation Opening (Pad mask)	A
TM.1a	Min Passivation Opening	40
TM.2*	UBM Opening	A+20
TM.2a	Min UBM Opening (defined by the layers UBMPPeri or UBMPArray or UBMEPlate layers depending upon the process)	60
TM.3	Bump Pad (Top metal in this case)	A+32
TM.3a	Min Bump Pad	72
TM. 3b*	Bump Pad larger then UBM Opening	6 / per side
TM. 4	Space from centre of Pad to Die Edge (Outer edge of GUARD_RING_MK marking)	90
TM. 5	Min allowable bump pitch	>= 70 + (1.3*TM.2)
TM.6	Pad without UBM layers is not allowed except the Pad under PROBE_MK marking.	Not allowed
TM.7	Shape of the Pad shall be at least octagonal (or more closer to circular) except the Pad under PROBE_MK marking.	DRC check
TM.8	Space from edge of top via to the edge of UBM opening	2
TM.9	Partially overlap of top via with passivation opening is not allowed	DRC check
TM.10	Space from edge of top via to the edge of passivation opening	2

Note: * Use tolerance of 0.2um for DRC check.

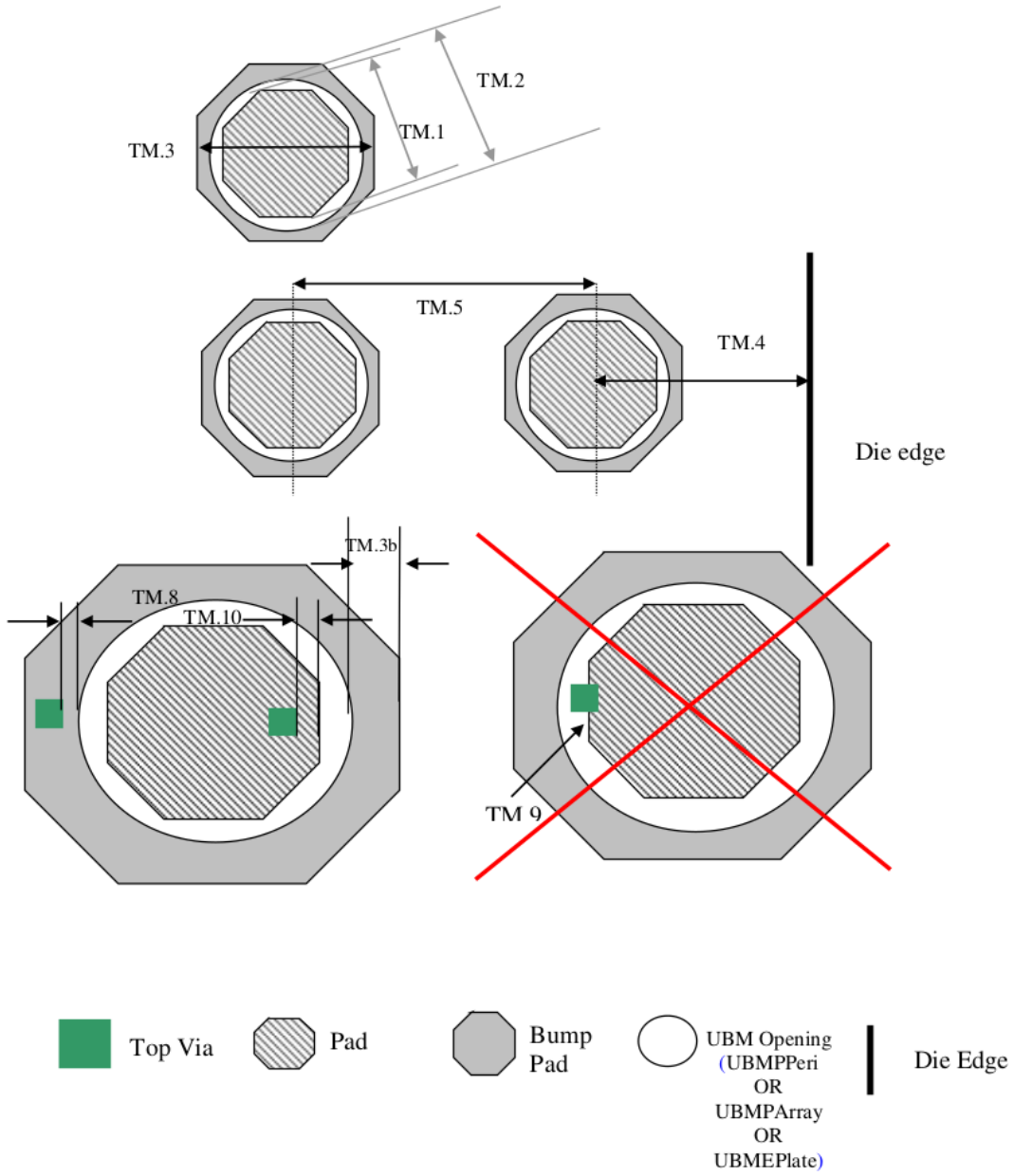

9.4.4 Alignment Mark for bumping process

Following diagram shows the alignment mark to be drawn in top metal for the flip chip process. For exact location and size conformation respective assembly house shall be consulted.

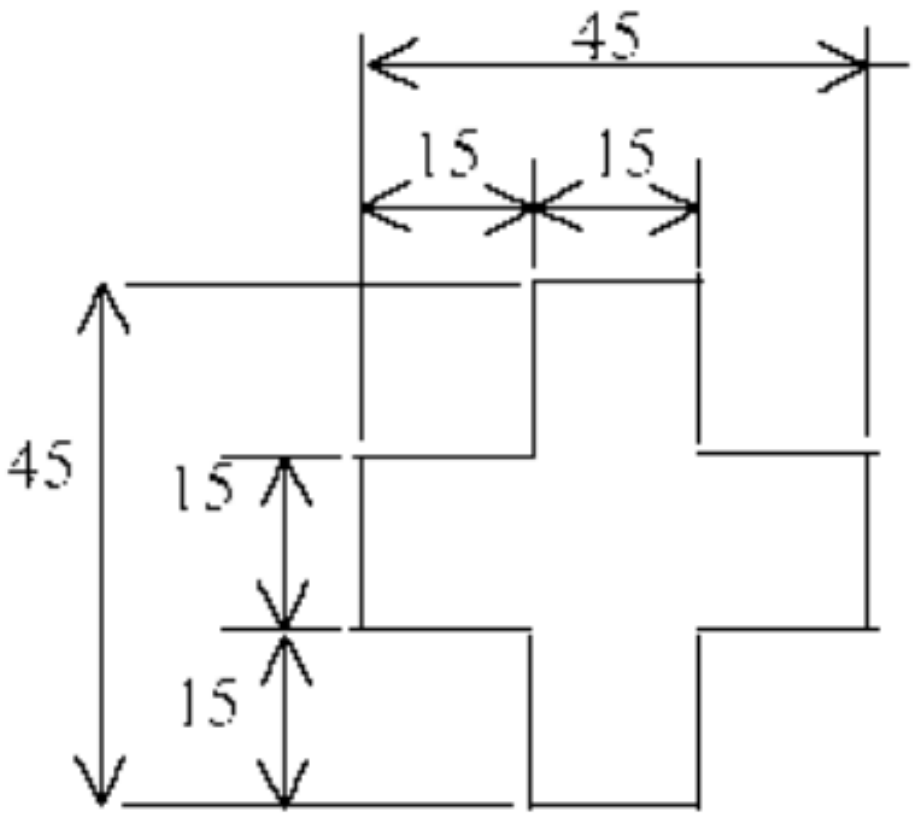

9.4.5 Probe pad design guidelines

Probe pad are the wafer level test pads, which does not require solder bump on it for the packaging. Following are the design guidelines for test probe pad used together with solder bump pad. Probe pads are identified by the PAD layers covered by PROBE_MK layers.

Table 28: Probe pad

NO.	DESCRIPTION	LAYOUT RULE
PM.1	Min PROBE_MK overlap of probe pad passivation opening	0
PM.2	Min probe pad passivation opening1	50
PM.3	Min probe pad pitch1	80
PM.4	Min Probe pad top layer metal overlap of pad opening	2
PM.5	Min Probe pad passivation opening to solder bump UBM opening	13

1. This value is subject to respective wafer sort house rule.

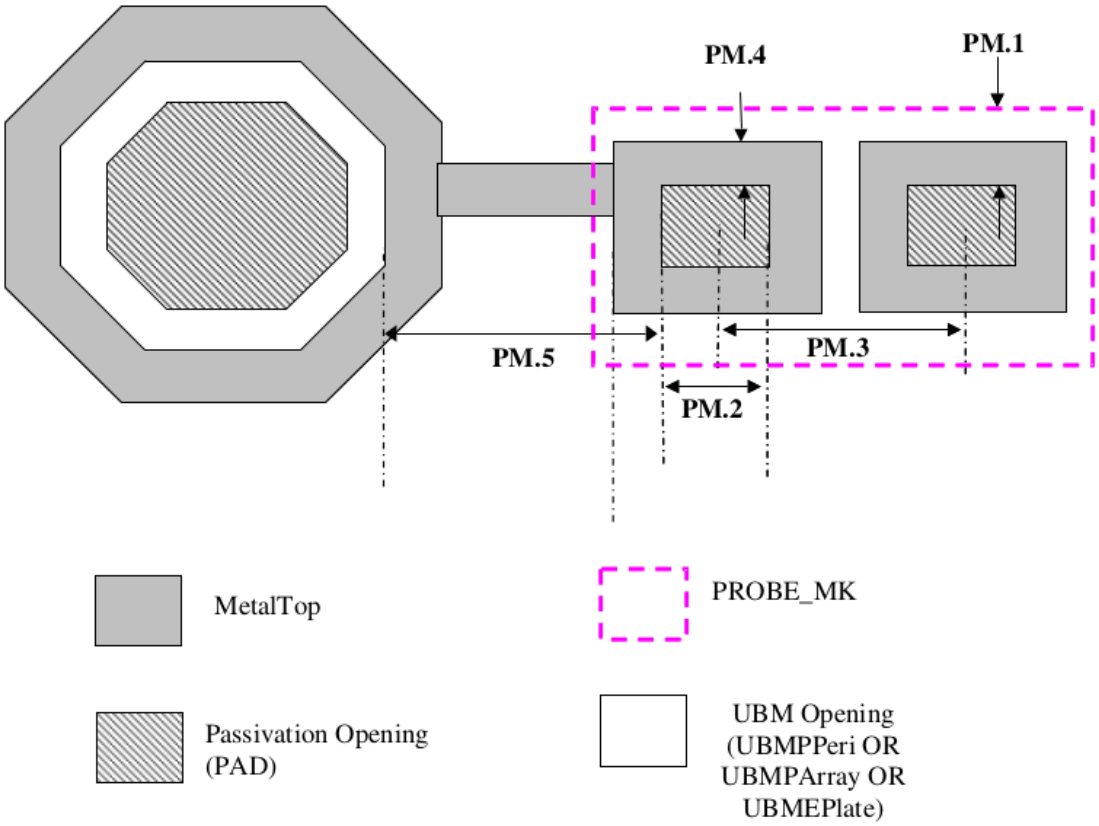

4.1.10 10.0 Analog Device Related Rules

10.1 P+ Poly Resistor (PRES)

This section defines the rules for Un-salicide P+ poly resistors. This uses P+ source drain implant to realize P+ poly resistor and does not require any additional processing step if SAB layer is present in the process. Here resistor width is determined by Poly2 width and the resistor length is determined by SAB layer.

Table 29: PRES

RULE NO.	DESCRIPTION	Rule
PRES.1	Minimum width of Poly2 resistor	0.8
PRES.2	Minimum space between Poly2 resistors	0.4
PRES.3	Minimum space from Poly2 resistor to COMP	0.6
PRES.4	Minimum space from Poly2 resistor to unrelated Poly2	0.6
PRES.5	Minimum Plus implant overlap of Poly2 resistor	0.3
PRES.6	Minimum salicide block overlap of Poly2 resistor in width direction	0.28
PRES.7	Space from salicide block to contact on Poly2 resistor	0.22
PRES.8*	Maximum current density of Poly2 resistor (mA/um)	1
PRES.9	Pplus Poly2 resistor shall be covered by RES_MK marking. RES_MK length shall be coincide with resistor length (Defined by SAB length) and width covering the width of Poly2. If the size of single RES_MK mark layer is greater than 15000um2 and both side (X and Y) are greater than 80um. then the minimum spacing to adjacent RES_MK layer	20

Note: * *Appendix B: Rules not coded*

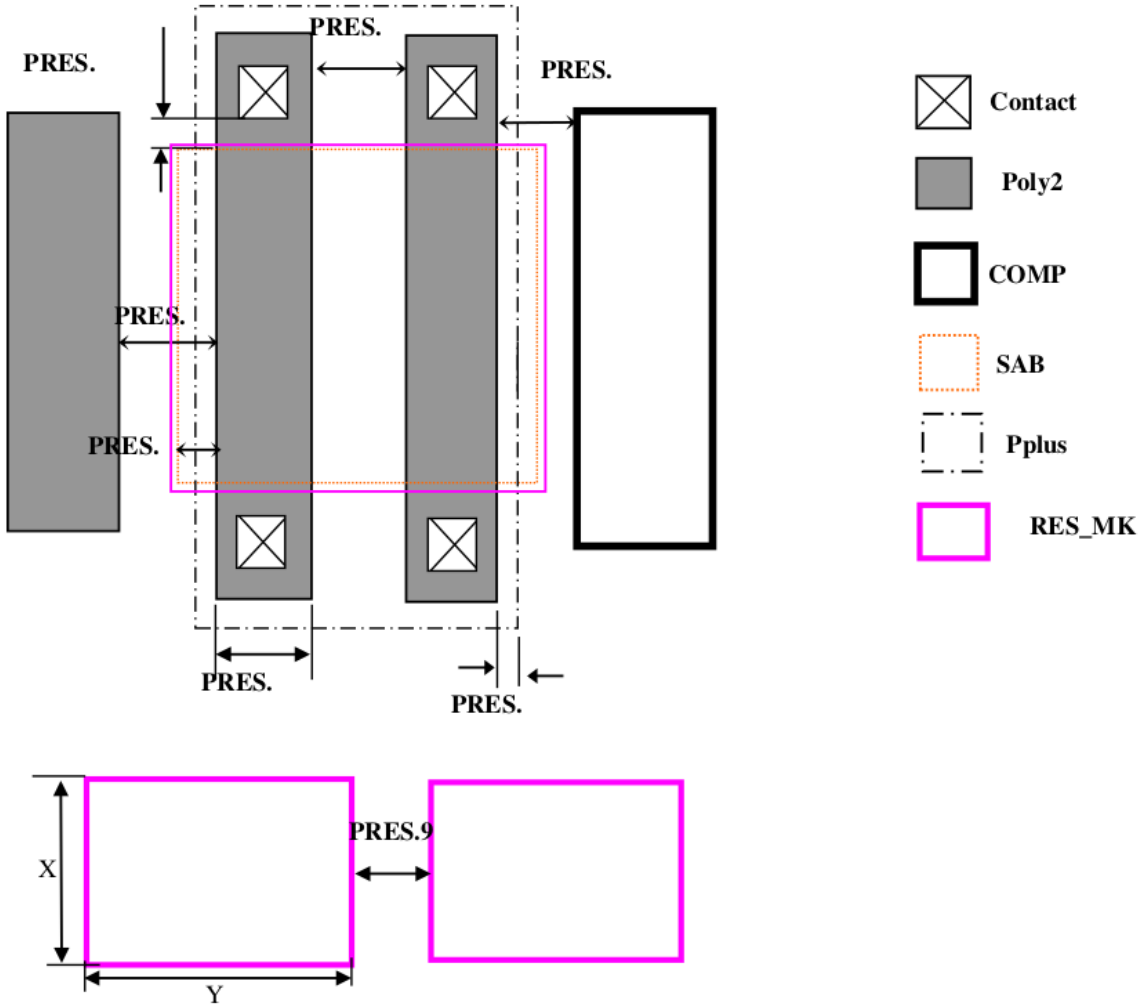

10.2 N+ Poly Resistor (Low SHEET RHO)

This section defines the rules for Un-salicide N+ poly resistors. This uses N+ source drain implant to realize N+ poly resistor and does not require any additional processing step if SAB layer is present in the process. Here resistor width is determined by Poly2 width and the resistor length is determined by SAB layer.

Table 30: LRES

RULE NO.	DESCRIPTION	Rules
LRES.1	Minimum width of Poly2 resistor	0.8
LRES.2	Minimum space between Poly2 resistors	0.4
LRES.3	Minimum space from Poly2 resistor to COMP	0.6
LRES.4	Minimum space from Poly2 resistor to unrelated Poly2	0.6
LRES.5	Minimum Nplus implant overlap of Poly2 resistor	0.3
LRES.6	Minimum salicide block overlap of Poly2 resistor in width direction	0.28
LRES.7	Space from salicide block to contact on Poly2 resistor	0.22
LRES.8*	Maximum current density of Poly2 resistor (mA/□m)	1
LRES.9	Nplus Poly2 resistor shall be covered by RES_MK marking. RES_MK length shall be coincide with resistor length (Defined by SAB length) and width covering the width of Poly2. If the size of single RES_MK mark layer is greater than 15000um2 and both side (X and Y) are greater than 80um. Then the minimum spacing to adjacent RES_MK layer	20

Note: * *Appendix B: Rules not coded*

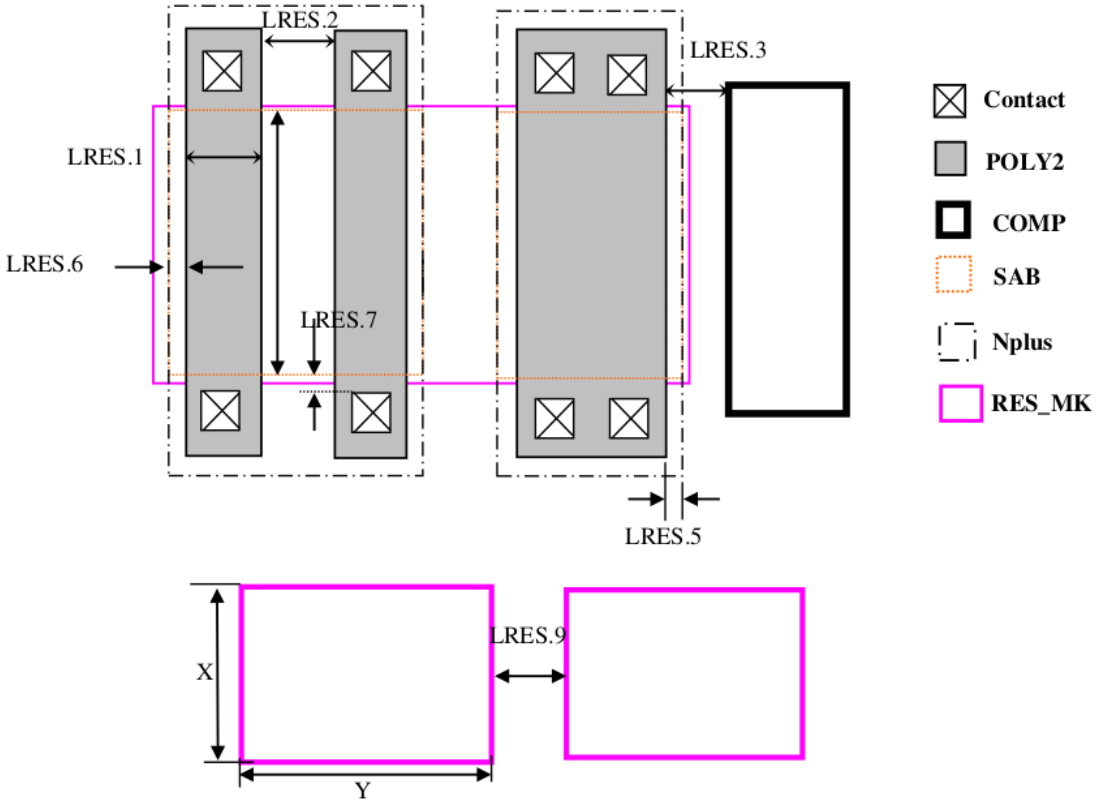

10.3 HRES Poly Resistor (PHRES) (Optional with one additional mask)

This section defines the rules for Un-salicide P-type high sheet resistance poly resistor. This uses one additional mask (L63) to have special implant on high Rs poly resistors. Here resistor width is determined by Poly2 width and the resistor length is determined by Pplus to Pplus space on Poly2. In order to realize this resistor "Resistor" layer must be drawn covering the Poly2.

Table 31: HRES

RULE NO.	DESCRIPTION	Rule
HRES.1	Minimum space Note : Merge if the spacing is less than 0.40 um	0.4
HRES.2	Minimum width of Poly2 resistor	1
HRES.3	Minimum space between Poly2 resistors	0.4
HRES.4	Minimum RESISTOR overlap of Poly2 resistor	0.4
HRES.5	Minimum RESISTOR space to unrelated Poly2	0.3
HRES.6	Minimum RESISTOR space to COMP	0.3
HRES.7	Minimum Pplus overlap of contact on Poly2 resistor	0.2
HRES.8	Space from salicide block to contact on Poly2 resistor	0.22
HRES.9	Minimum salicide block overlap of Poly2 resistor in width direction	0.28
HRES.10	Minimum & maximum Pplus overlap of SAB	0.1
HRES.11*	Maximum current density of Poly2 resistor (mA/um)	1
HRES.12	P type Poly2 resistor (high sheet rho) shall be covered by RES_MK marking. RES_MK length shall be coincide with resistor length (Defined by Pplus space) and width covering the width of Poly2. If the size of single RES_MK mark layer is greater than 15000um2 and both side (X and Y) are greater than 80um. Then the minimum spacing to adjacent RES_MK layer	20

Note: * *Appendix B: Rules not coded*

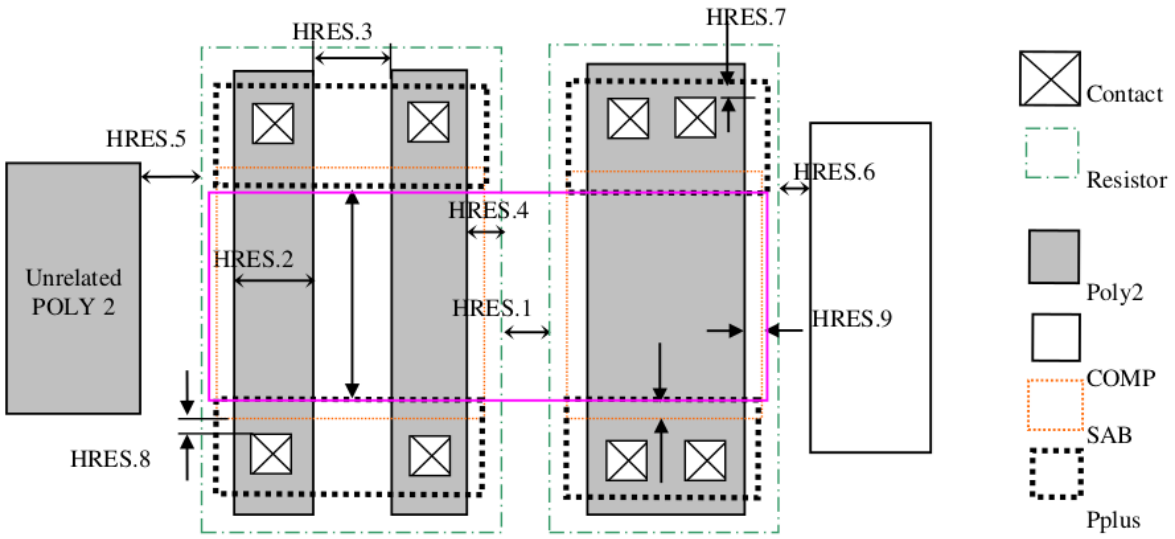

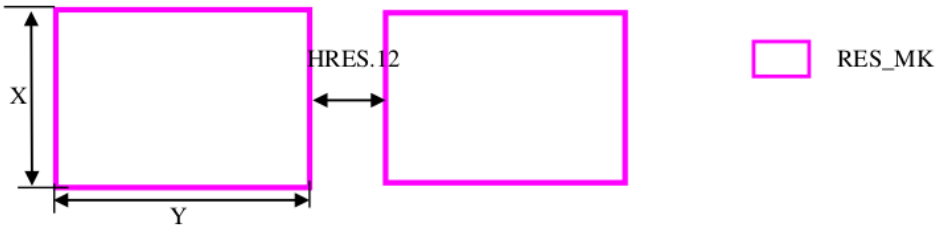

10.4 MIM (Metal-insulator-Metal) Capacitor (Optional)

10.4.1 MIM Option A

This section describes rules for MIM (Metal-insulator-Metal) capacitor. FuseTop layer defines the top plate of MIM capacitor and Metal2 layer defines MIM bottom plate. Area of the MIM is determined by FuseTop Layer.

Table 32: MIM Option A

RULE NO.	DESCRIPTION	LAYOUT RULE
MIM.1	Minimum MiM bottom plate (1) spacing to the bottom plate metal (whether adjacent MiM or routing metal)	1.2
MIM.2	Minimum MiM bottom plate (1) overlap of Via2 layer [This is applicable for via2 within 1.06um oversize of FuseTop layer (referenced to virtual bottom plate)]	0.4
MIM.3	Minimum MiM bottom plate overlap of Top plate	0.6
MIM.4	Minimum MiM top plate (FuseTop) overlap of Via2	0.4
MIM.5	Minimum spacing between top plate and the Via2 connecting to the bottom plate	0.4
MIM.6	Minimum spacing between unrelated top plates	0.6
MIM.7	Min FuseTop enclosure by CAP_MK	0
MIM.8a	Minimum MIM cap area (defined by FuseTop area)	5*5 um2
MIM.8b	Maximum single MIM Cap area (Use multiple MIM caps in parallel connection if bigger capacitors are required)	100*100 um2
MIM.9	Min. via spacing for sea of via on MIM top plate	0.5
MIM.10	(a) There cannot be any Via1 touching MIM bottom plate Metal2 (b) MIM bottom plate Metal2 can only be connected through the higher Via (Via2).	
MIM.11	Bottom plate of multiple MIM caps can be shared (for common nodes) as long as total MIM area with that single common plate does not exceed “MIM.8b” rule.	
MIM.12*	For MIM need to identify its’ length and width, use MIM_L_MK to mark MIM capacitor’s length	
Guideline	There cannot be any sensitive matching analog circuitry underneath MIM.	

Note:

1. Checked by virtual MiM bottom plate which defines as: ((FuseTop@1.06) AND (Metal2 interact FuseTop))

   * *Appendix B: Rules not coded*

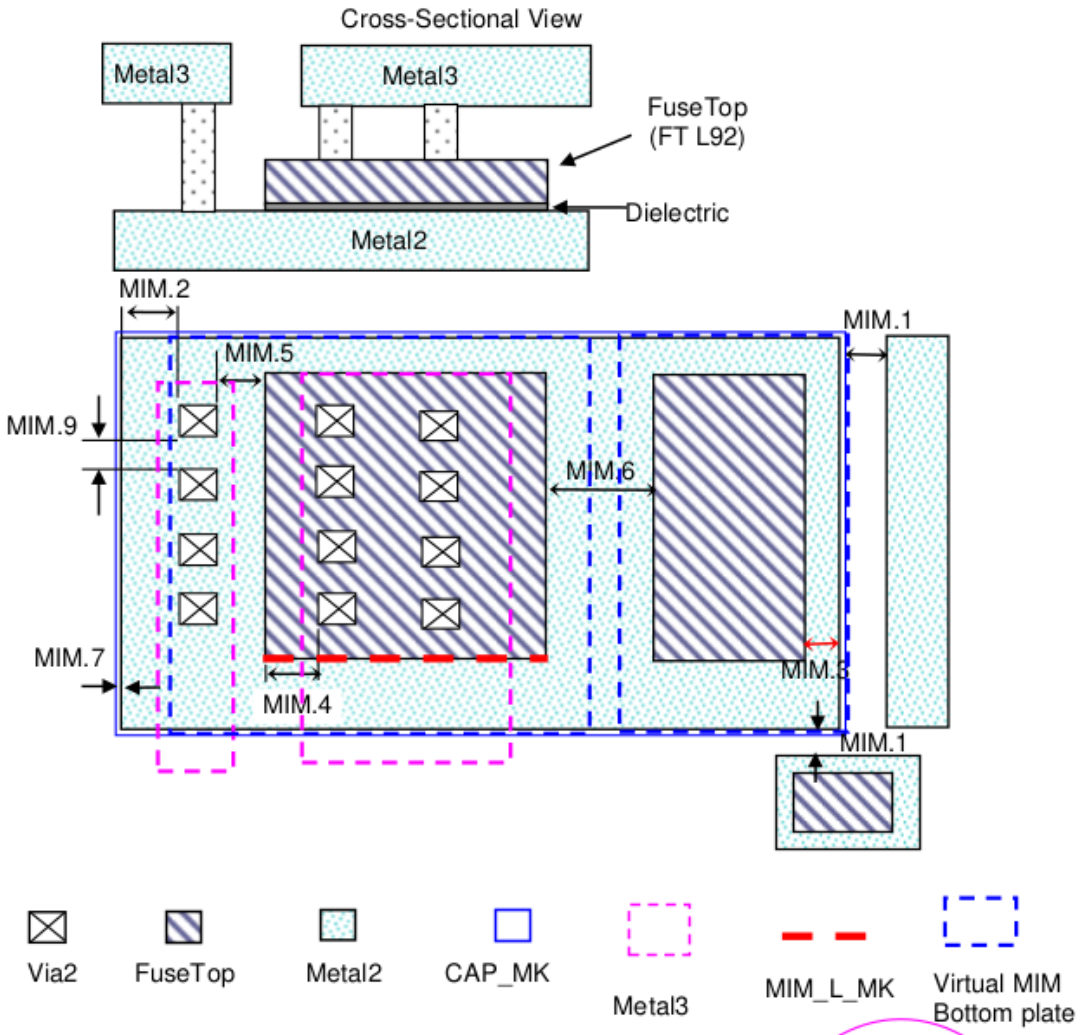

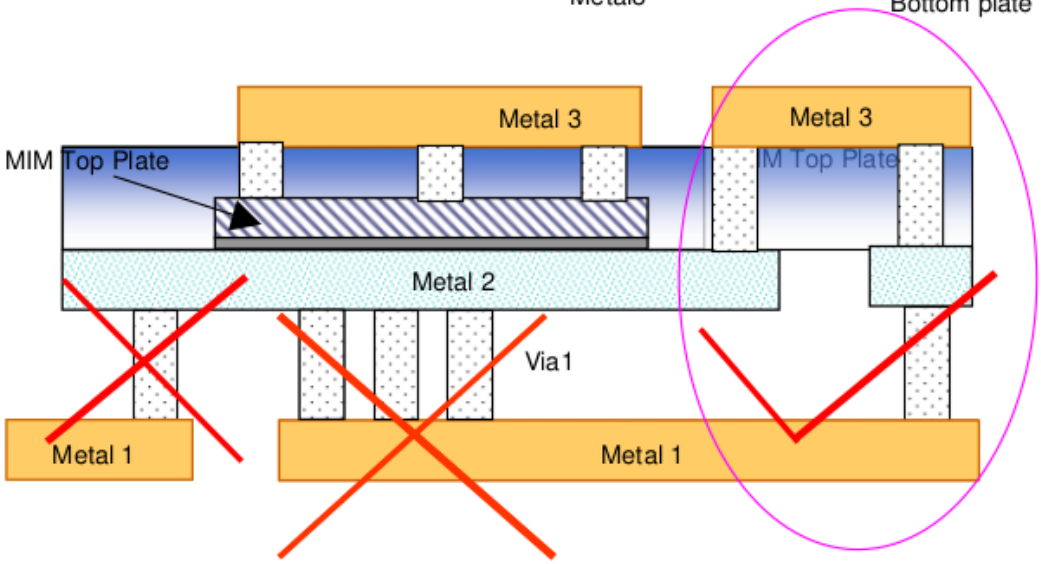

MIM.10 rule illustration

10.4.2 MIM Option B

This section describes rules for MiM (Metal-insulator-Metal) capacitor if MIM capacitor needs to be placed between "Top metal" & "Top metal-1". FuseTop layer still used to defines the top plate of MiM capacitor and Metaln-1 layer defines MiM bottom plate (n>2, n is the top metal number. i.e: for 4 metal layers process, Top Metal is Metal4, Metaln-1 means Metal3 and Vian-1 means Via3). FuseTop Layer determines area of the MIM.

Note: This option-B only supports 4 or more metal layers process. (For the 3 metal layers process, please refer to option-A). Customer will be need to chose either Option-A or Option B MIM in the design kit, Option-A and Option-B MIM can not be used in the same process.

Table 33: MIM Option B

RULE NO.	DESCRIPTION	LAYOUT RULE
MIMTM.1	Minimum MiM bottom plate (1) spacing to the bottom plate metal (whether adjacent MiM or routing metal)	1.2
MIMTM.2	Minimum MiM bottom plate (1) overlap of "Vian-1" layer [This is applicable for "Vian-1" within 1.06um oversize of FuseTop layer (referenced to virtual bottom plate)]	0.4
MIMTM.3	Minimum MiM bottom plate overlap of Top plate	0.6
MIMTM.4	Minimum MiM top plate (FuseTop) overlap of "Vian-1"	0.4
MIMTM.5	Minimum spacing between top plate and the "Vian-1" connecting to the bottom Plate	0.4
MIMTM.6	Minimum spacing between unrelated top plates	0.6
MIMTM.7	Min FuseTop enclosure by CAP_MK	0
MIMTM.8	Minimum MIM cap area (defined by FuseTop area)	5*5um2
MIMTM.8	Maximum single MIM Cap area (Use multiple MIM caps in parallel connection if bigger capacitors are required)	100*100um2
MIMTM.9	Min. Via ("Vian-1") spacing for sea of Via on MIM top plate	0.5
MIMTM.1	(a) There cannot be any "Vian-2" touching MIM bottom plate "Metaln-1" (b) MIM bottom plate "Metaln-1" can only be connected through the higher Via ("Vian-1").	
MIMTM.1	Bottom plate of multiple MIM caps can be shared (for common nodes) as long as total MIM area with that single common plate does not exceed "MIMTM.8b" rule.	
MIMTM.1	For MIM need to identify its' length and width, use MIM_L_MK to mark MIM capacitor's length	
Guideline	There cannot be any sensitive matching analog circuitry underneath MIM.	

Note:

1. Checked by virtual MiM bottom plate which defines as: ((FuseTop @1.06) AND (Metaln-1 interact FuseTop))
2. These two MIM option (option-A and option-B) not allowed used on same process.

* *Appendix B: Rules not coded*

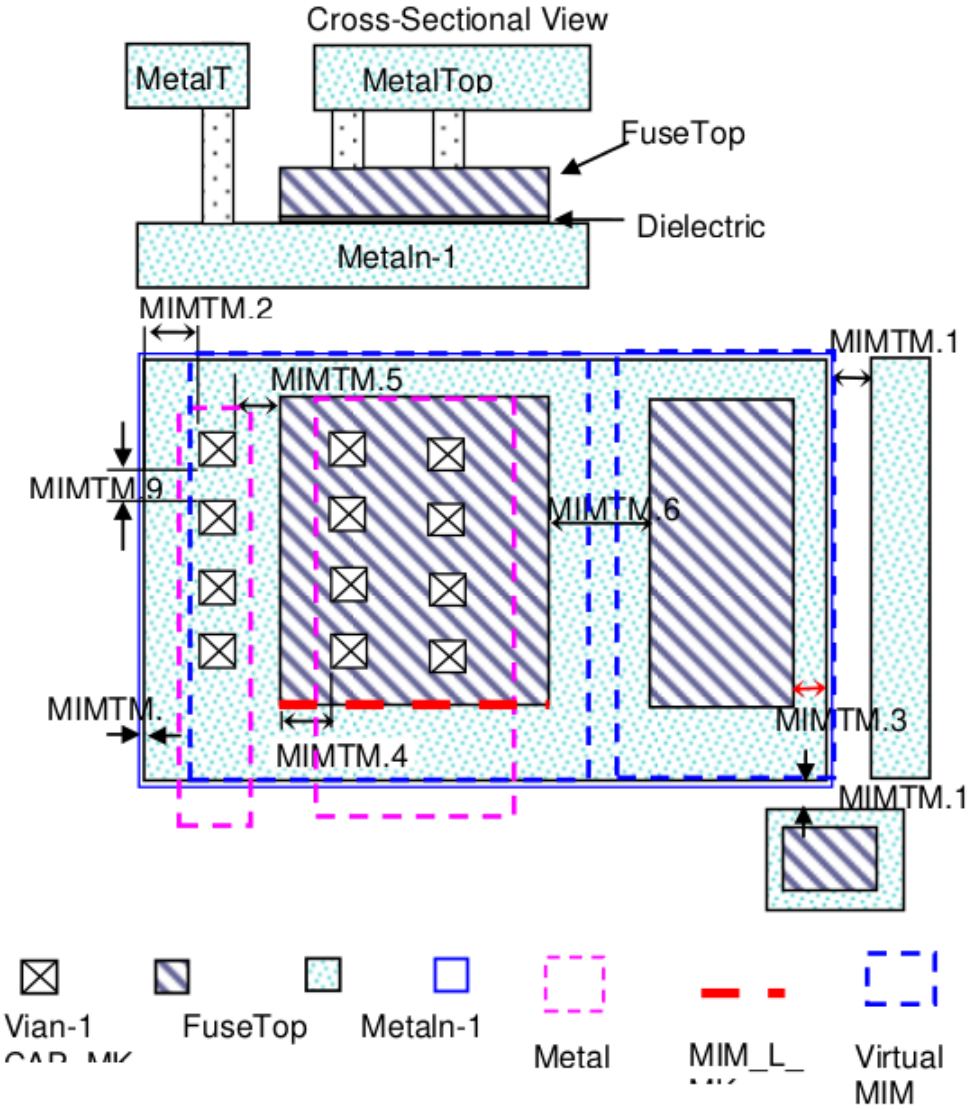

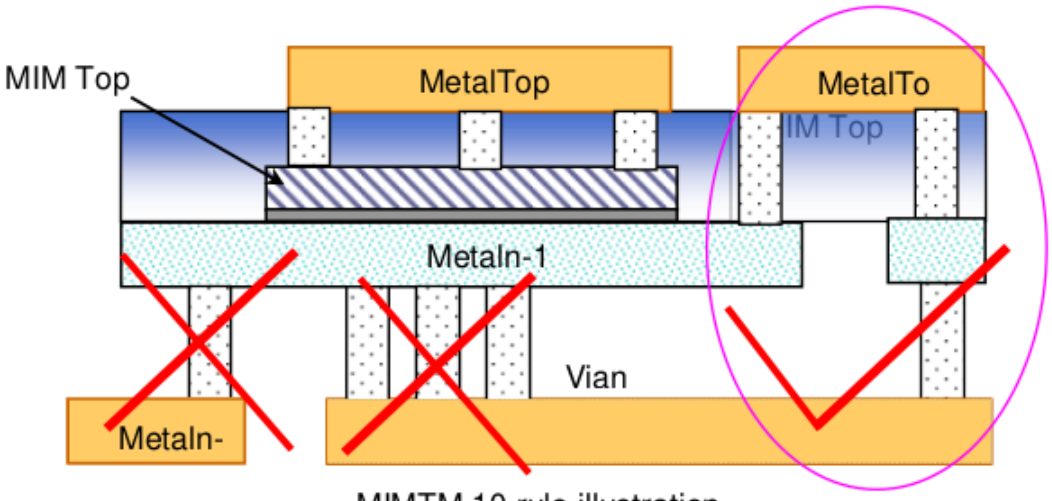

MIMTM.10 rule illustration

10.5 Native Vt NMOS (Optional)

This section describes Native NMOS rules. This process supports 3.3V and 5V/6V native Vt NMOS. The difference between 3.3V and 5V/6V native Vt transistor is that the 5V/6V native Vt NMOS need Dualgate layer.

Native Vt NMOS is recognized by NCOMP outside NWELL, interact with Poly2 and NAT.

Table 34: Native Vt NMOS

RULE NO.	DESCRIPTION	LAY-OUT RULE
LAYER	NAT	
NAT.1	Min. NAT Overlap of COMP of Native Vt NMOS	2
NAT.2	Space to unrelated COMP (outside NAT)	0.3
NAT.3	Space to NWell edge	0.5
NAT.4	Minimum channel length for 3.3V Native Vt NMOS (For smaller L Ioff will be higher than Spec)	1.8
NAT.5	Minimum channel length for 6.0V Native Vt NMOS (For smaller L Ioff will be higher than Spec)	1.8
NAT.6	Two or more COMPs if connected to different potential are not allowed under same NAT layer	
NAT.7	Minimum NAT to NAT spacing	0.74
NAT.8	Min. Dualgate overlap of NAT (for 5V/6V) native VT NMOS only	0
NAT.9	Poly interconnect under “NAT” layer is not allowed min spacing of un-related poly from the NAT layer	0.3
NAT.10	Nwell,inside “NAT” layer are not allowed	
NAT.11	NCOMP not intersecting to Poly2, is not allowed inside “NAT” layer	
NAT.12	Poly2 not intersecting with COMP is not allowed inside “NAT” (Poly2 resistor is not allowed inside “NAT”)	

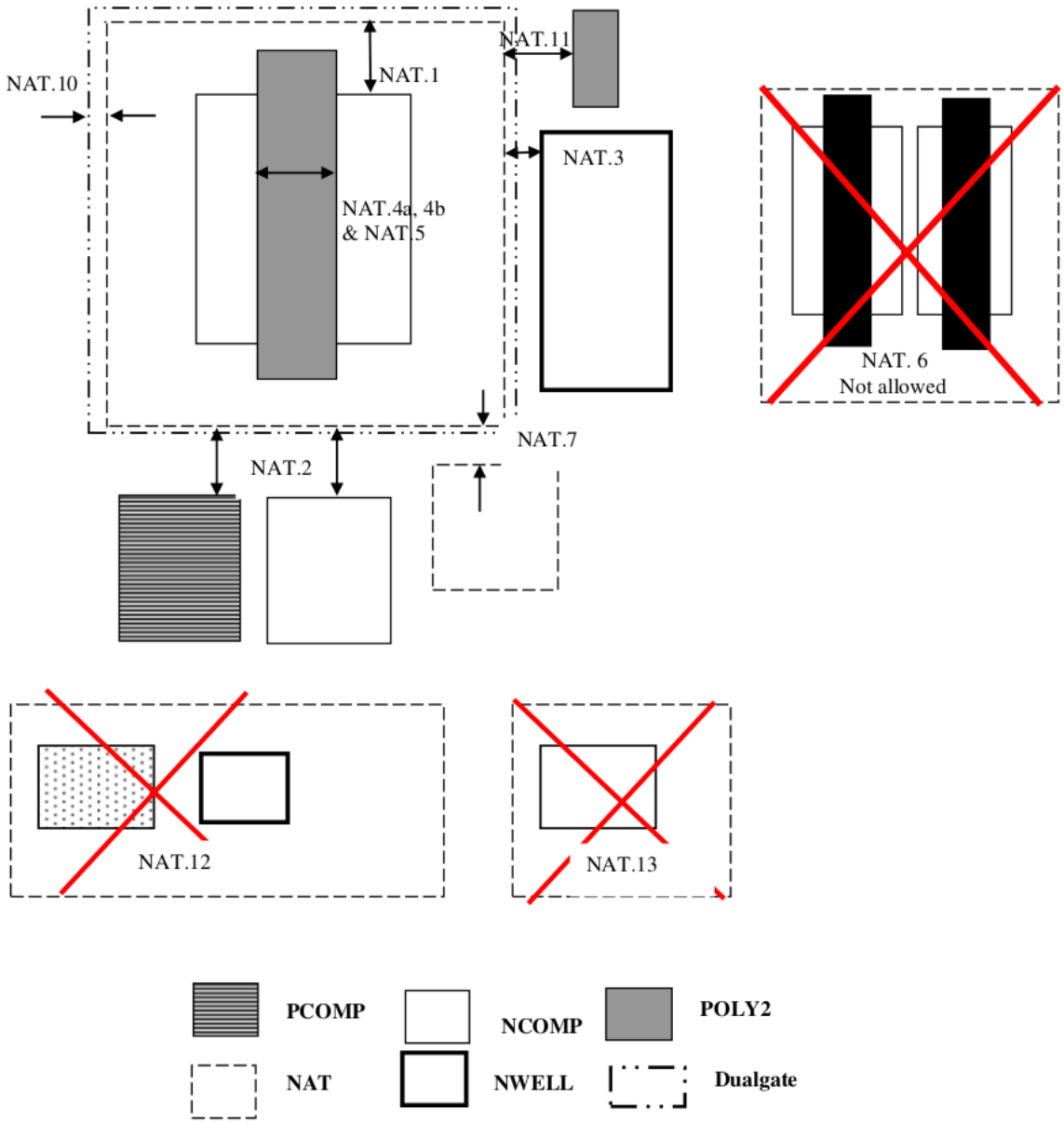

10.6 Match pair layout guidelines

Most of the analog circuits requires transistors, resistors and capacitors to be drawn as matched pair either 1:1 ratio matching (e.g in OP-Amp input stage) or 1:8 or 1:10 etc (e.g. in Band gap reference circuits). Other functional blocks needing matched device layout are ADC, DAC, current mirrors and switched-cap filters etc. When such critical matching of the identical devices is required then it is very important to layout them in specific systematic way so as to minimize systematic mismatch in the devices.

Mismatch can be categorized into the following categories:

(a) Systematic mismatch

This is caused by the some of the following factors:

(i) Lithographic loading and proximity effects.

(ii) Pattern etching loading effects (due to difference in pattern density)

(iii) Difference in layout (orientation, metal overlaps, etc)

(iv) Systematic mismatch of plasma damage effect when gates of two transistors are connected to different lengths of metal.

(v) Systematic mismatch of mechanical stress (e.g. STI stress, etc) in the vicinity of transistors.

(vi) Systematic mismatch of bias applied to neighboring devices affecting either one of the transistors in consideration.

This systematic mismatch is very much layout dependent. It is this systematic mismatch, which shall be minimized during the layout and these guidelines for the layout helps to minimize this systematic mismatch.

(b) Stochastic (Random intrinsic) device mismatch:

This is random and intrinsic to the devices in a given process and is mainly due to:

(i) Channel Dopant fluctuations.

(ii) Local mobility fluctuations,

(iii) Polysilicon gate granularity,

(iv) Oxide charges and interface states fluctuations.

(v) Random variation of transistor's channel length and widths

The mismatch of a device parameter "P" is caused by many single microscopical events of the given mismatch generating process.

$$\sigma^2_{\Delta P} = \frac{A^2_p}{W.L} + S^2_{\Delta P}\ D^2_x \text{ ----------(i)}$$

(Please see references for more detail)

where the first term represents the local random variation, and the second term represents systematic global variation, which depends upon the distance D_X. The parameters A_P^2 and S_P^2 are process-dependent constants. W and L are the effective width and length of the device and ΔP represents the matching performance (referred to the parameter P) of the given technology.

So the random intrinsic device mismatch standard deviation can be given as:

$$\sigma^2_{\Delta P} = \frac{A^2_p}{W.L} \Rightarrow \sigma_{\Delta P} = \frac{A_p}{\sqrt{W.L}} \text{ .....(ii)}$$

This parameter " A_P " is characterized for all devices in specific processes and presented in the respective device characterization reports. It is also then used in respective device mismatch models.

The above equation (ii) also suggests that for random device mismatch it is better to have big length "L" and width "W" for the device to minimize mismatch standard deviation for a given process.

Important Notes:

- Layout engineers shall consult the circuit design engineer to identify which device pairs are critical for matching.
- The layout engineers then shall follow these guidelines to draw matched pair to minimize systematic mismatch.
- These are just guidelines for better matching of devices

10.6.1 Devices required to be laid out as matched pair

Most of the time, the following are the type of devices required to be drawn for a good matched pair

(1) MOS Transistors

(a) NMOS Matched pair: Two NMOS of same type (same operating voltage and process layers) required to be matched in electrical characteristics. (S: Source, D: Drain, G: Gate)

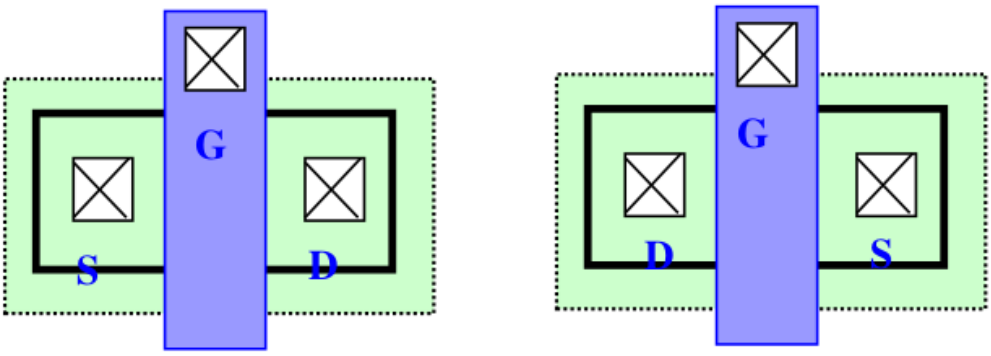

(b) PMOS Matched pair: Two PMOS of same type (same operating voltage and process layers) required to be matched in electrical characteristics. (S: Source, D: Drain, G: Gate)

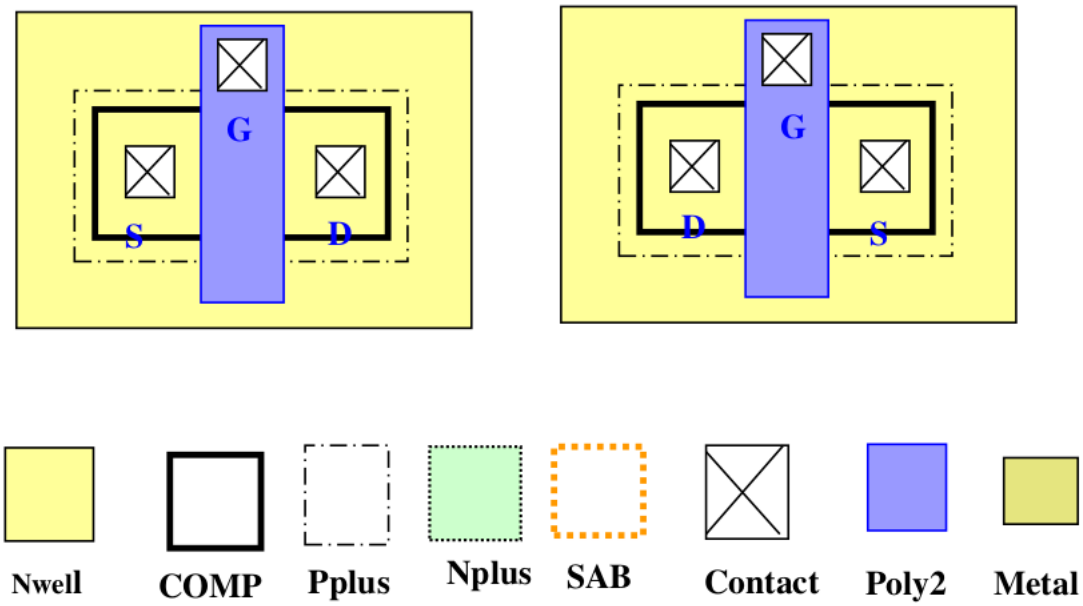

(2) BJT Transistors

Two BJT transistors (NPNs or PNPs) of same type (same operating voltage and process layers) required to be matched in electrical characteristics: (E: Emitter, B: Base, C: Collector).

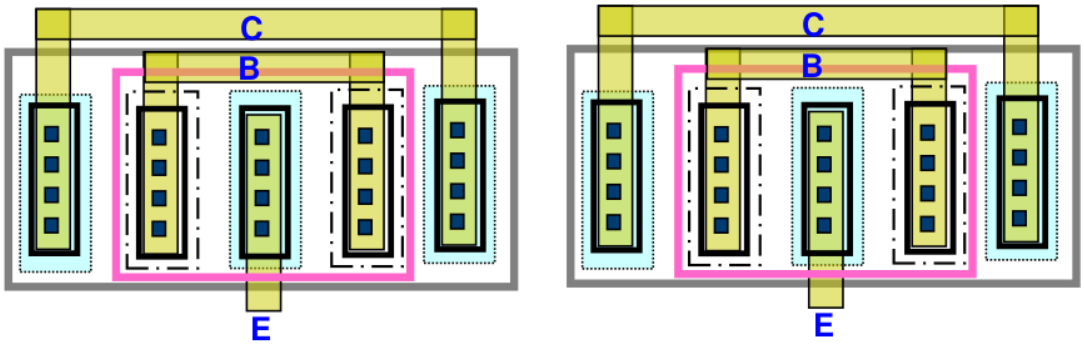

(3) Capacitors

Two identical (same operating voltage and process layers) capacitor (e.g MIM Caps) required to be matched in electrical characteristics. (T1: Capacitor top plate terminal, T2: capacitor's bottom plate terminal).

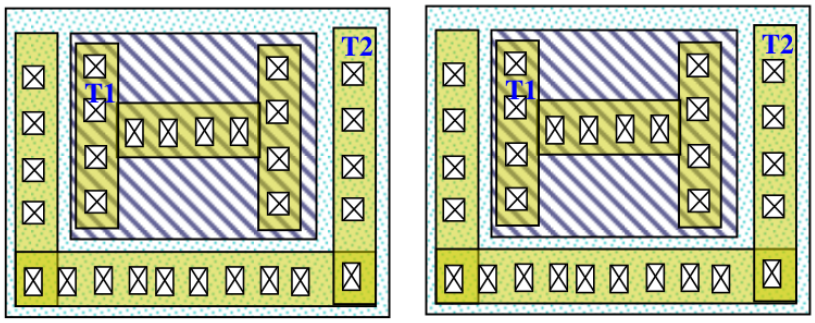

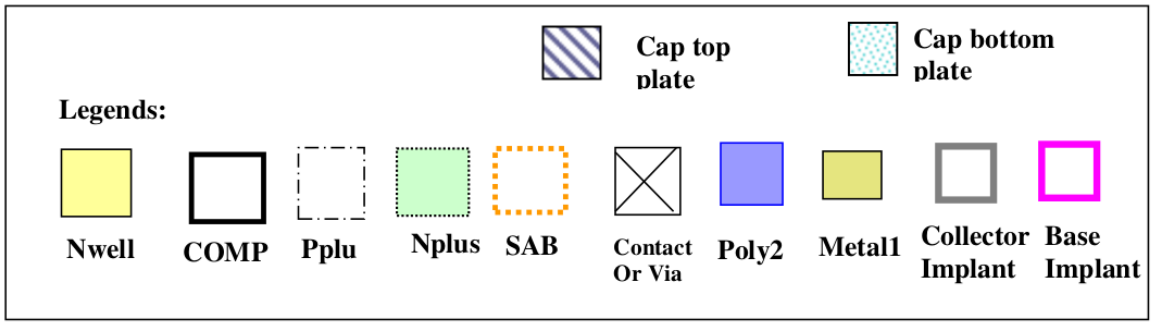

(4) Resistors

Two identical (same operating voltage and process layers) resistors (e.g Poly resistors) required to be matched in electrical characteristics. (T1: resistors one terminal, T2: Resistor's other terminal).

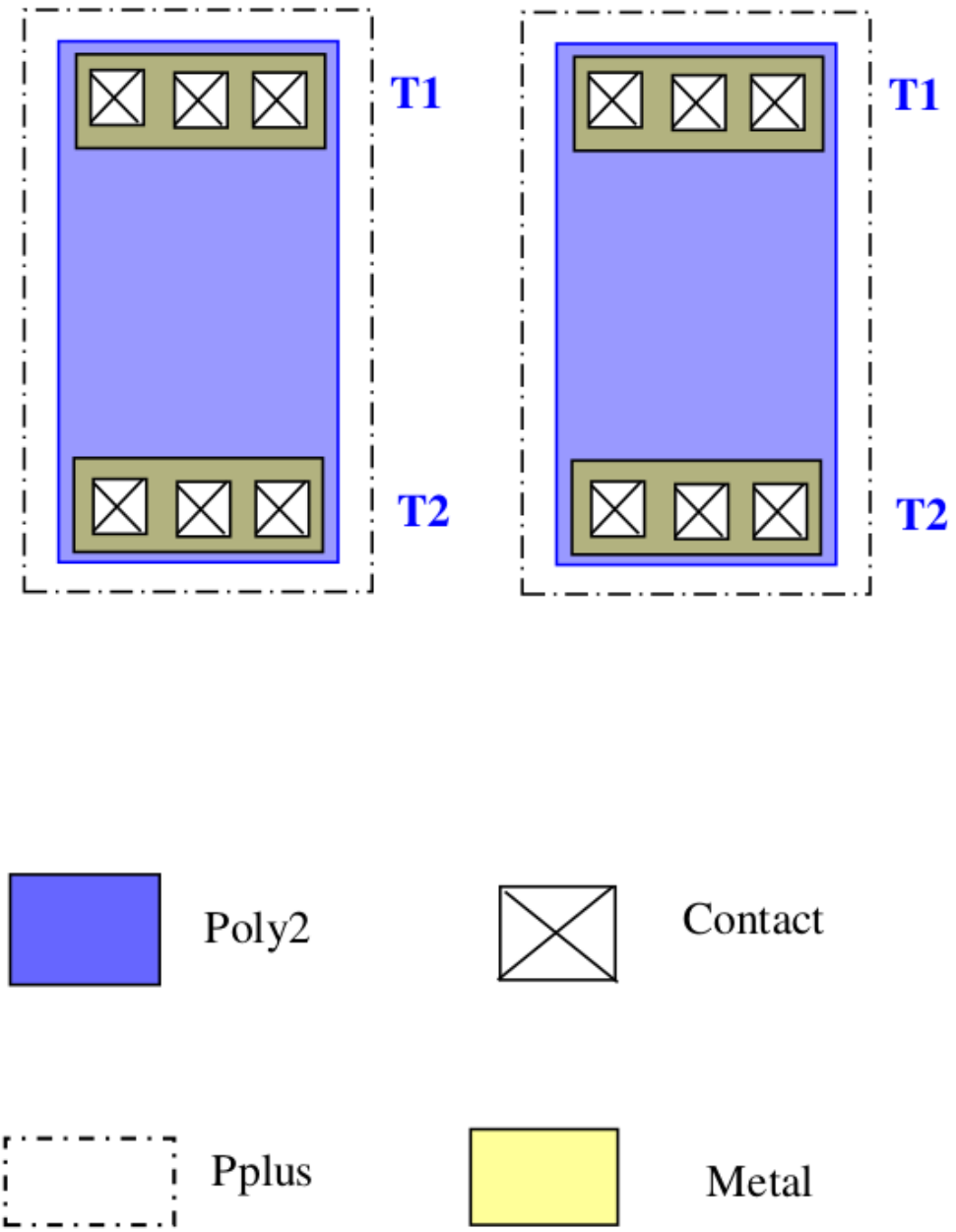
T1
T2
T1
T2
Poly2
Contact
Pplus
Metal

10.6.2 Matched pair layout guidelines

Table 35: Matched pair layout guidelines

Sr.No	Guideline	Comment
MP.1	Matched pair device layout shall be exactly identical to each other (as shown in above diagrams)	
MP.2a	Matched pair devices shall be of the same dimension. If the matching is required to be 1:n ratio, then a unit cell of the same size shall be used.	
MP.2b	For matching requirement of 1:n ratio for transistors, following layout shall be avoided: Expecting 1 finger device to have "n X" ratio matching with "n" fingers (n>=2) devices. Expecting one of the fingers of n finger transistor to be have (1: "n-1") ratio matched with its rest of (n-1) finger. (n >= 3)	
MP.3	Matched pair devices shall be placed as close as possible to each other (of course abiding by layout rules)	
MP.4	Matched pair devices shall preferably be surrounded by one row of identical dummy devices.	
MP.5	Matched pair devices shall see identical surrounding around it. For example if two NMOS in P-substrate are expected to be matched and one of them have Nwell adjacent to it and other have P-substrate tap their matching will not be good.	
MP.6	Metal connection width and lengths to each identical node of the matched pair shall be similar	
MP.7	Matched pair devices shall run in parallel and not in perpendicular or anti Parallel.	
MP.8	Use cross-coupled or interleave kind of layout to create as much symmetry in the devices as possible (see examples of matched pair layouts)	
MP.9	Do not use smallest design rule lines and widths. Minimum device dimensions (L and W) used for matched pair shall be 2 or 3X to the minimum design rules in that technology for those devices.	
MP.10	There shall not be any unrelated (not as a direct part of the device or its direct connection) conductors (metal, poly or salicided diffusion), over or under the matched pair devices.	
MP.11	Matched pair devices shall not be separated by unrelated devices in Between.	
MP.12	Matched pair devices shall see identical DC bias at all identical device Nodes.	
MP.13	Matched pair devices shall have same well (either both Nwell or both Pwell) underneath.	

Note: 10.6.2 Matched pair layout guidelines *Appendix B: Rules not coded*

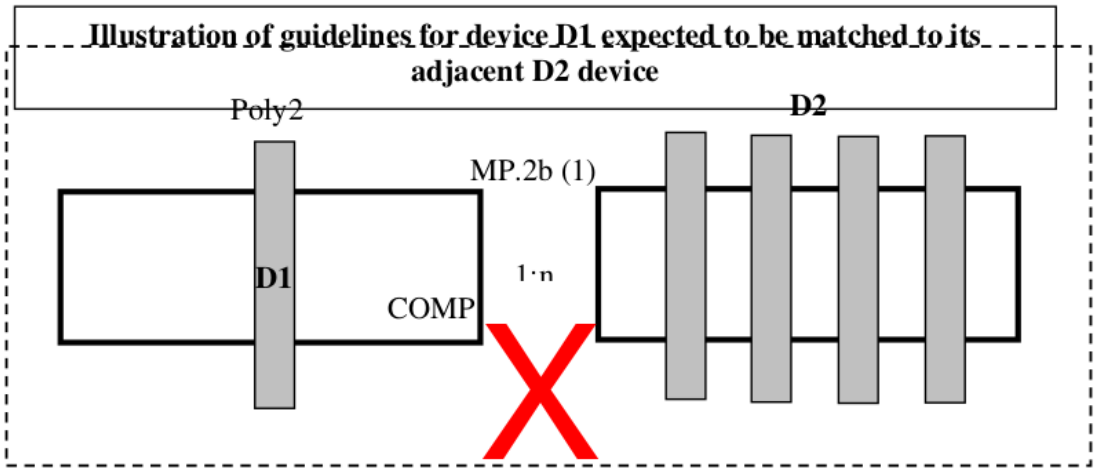
Illustration of guidelines for device D1 expected to be matched to its adjacent D2 device
Poly2
D2
MP.2b (1)
D1
COMP
1·n

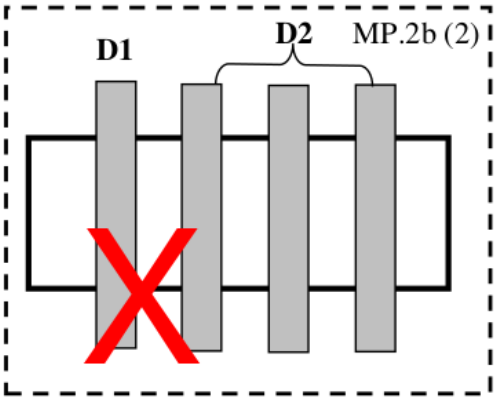
D1
D2
MP.2b (2)

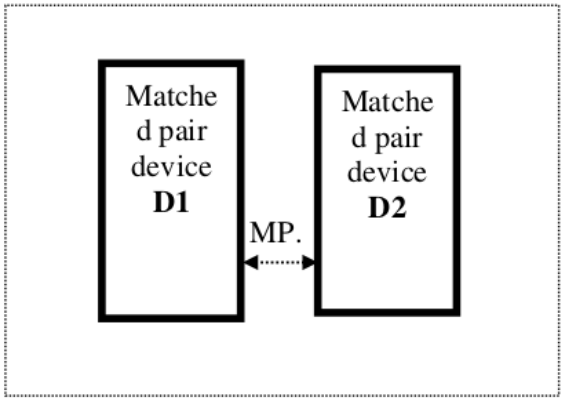
Matche d pair device D1
Matche d pair device D2
MP.

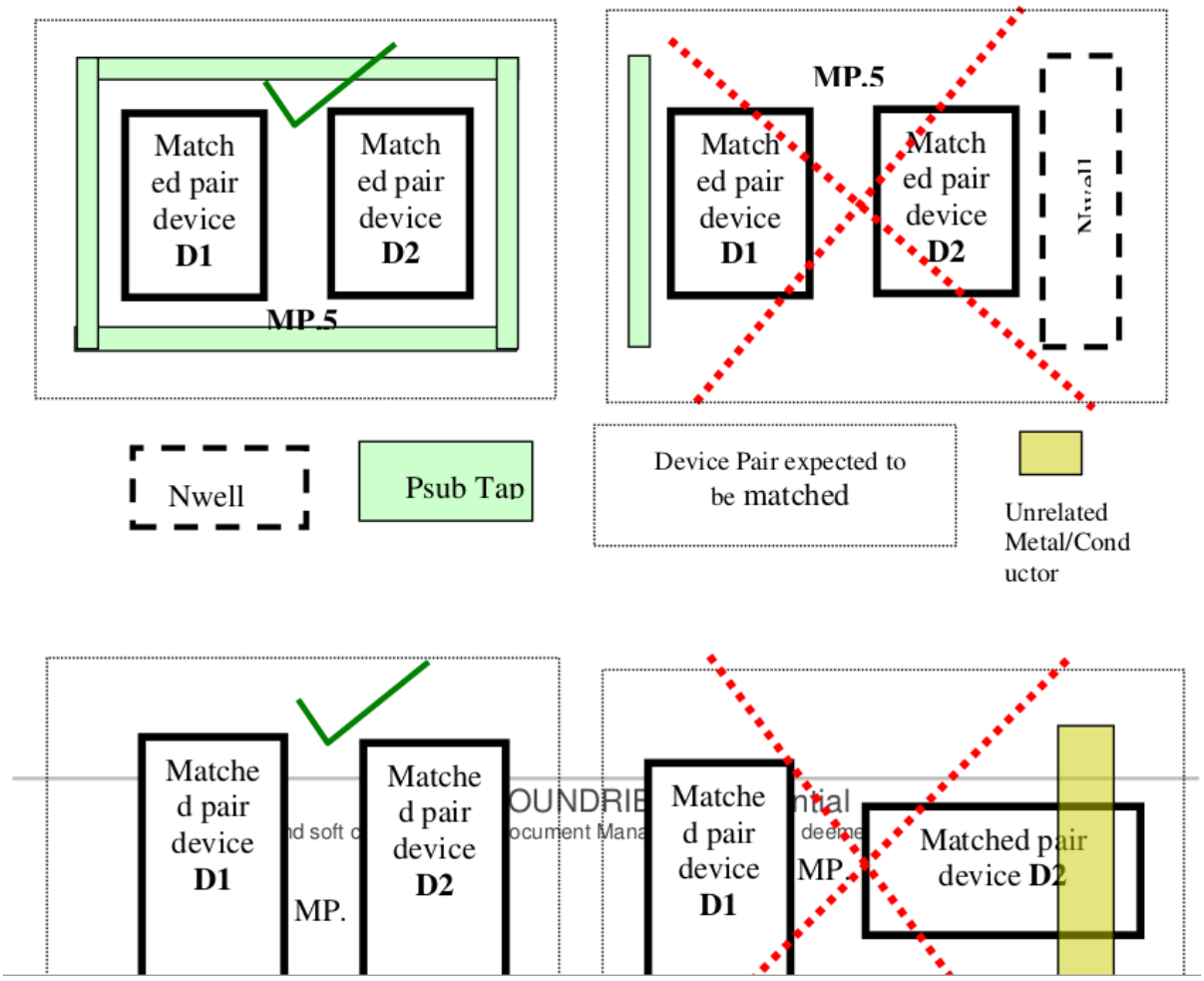
Match
ed pair
device
D1
Match
ed pair
device
D2
MP.5
MP.5
Match
ed pair
device
D1
Match
ed pair
device
D2
Nwell
Nwell
Psub Tap
Device Pair expected to
be matched
Unrelated
Metal/Cond
uctor
Matche
d pair
device
D1
MP.
Matche
d pair
device
D2
Matche
d pair
device
D1
MP.
Matched pair
device D2

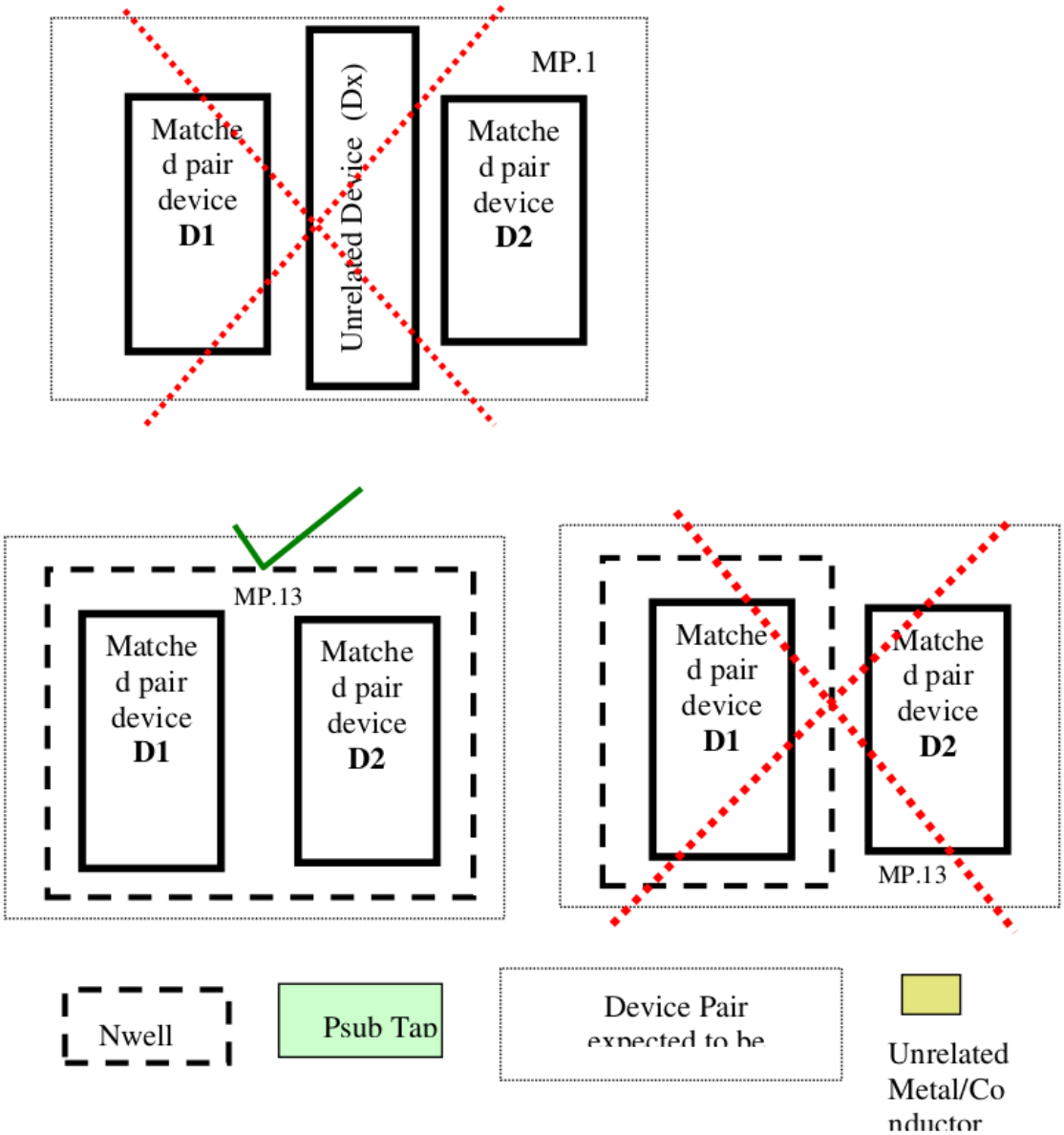

10.6.3 Sample layout of matched pair devices

Sample layout of matched pair transistors:

- Transistor "A" expected to be matched with transistor "B"
- Total width of transistor A = 2*W
- "D" are the dummy transistors not connected to the circuit

(a) Cross coupled connection layout

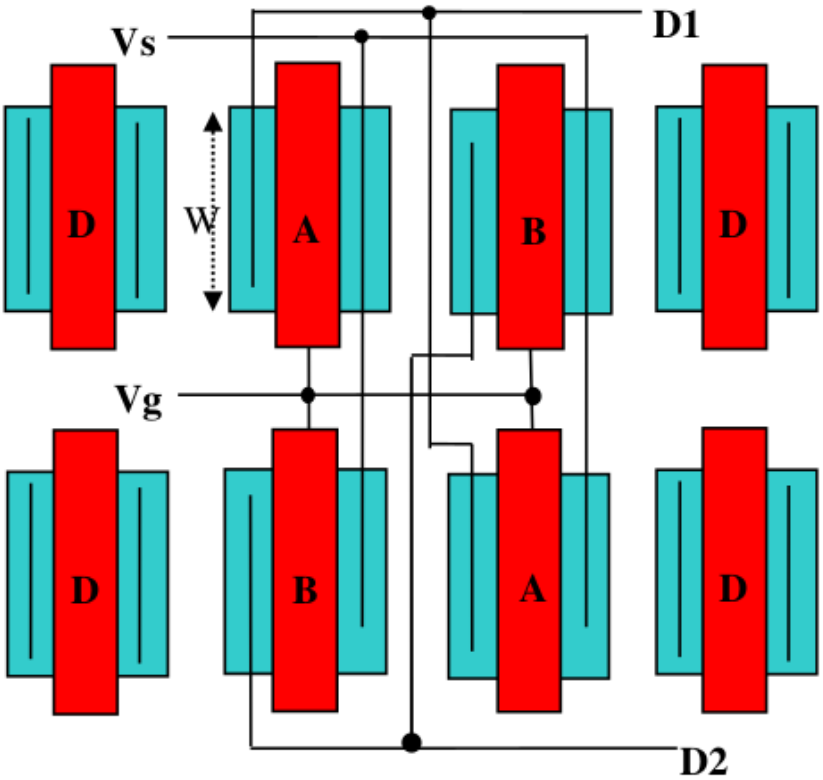

(b) Interleave kind of transistor layout

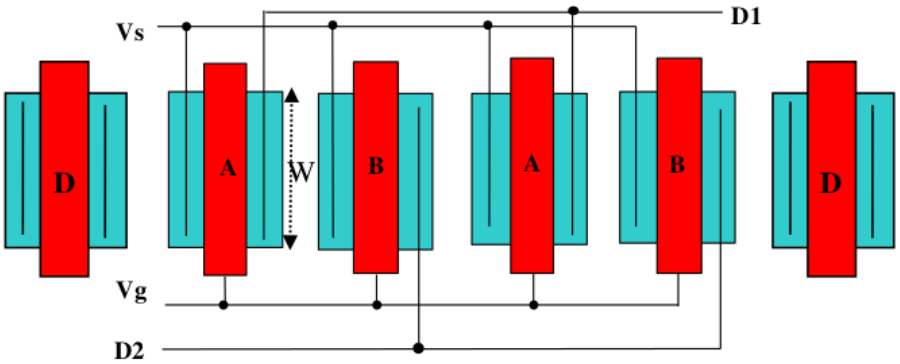

Sample layout of matched pair Capacitors:

- Capacitor "A" expected to be matched with Capacitor "B"
- Total area of capacitor "A" = 2* unit cell area (for Cross couple layout below)
- "D" are the dummy capacitors not connected to the circuit

(a) Cross coupled connection layout

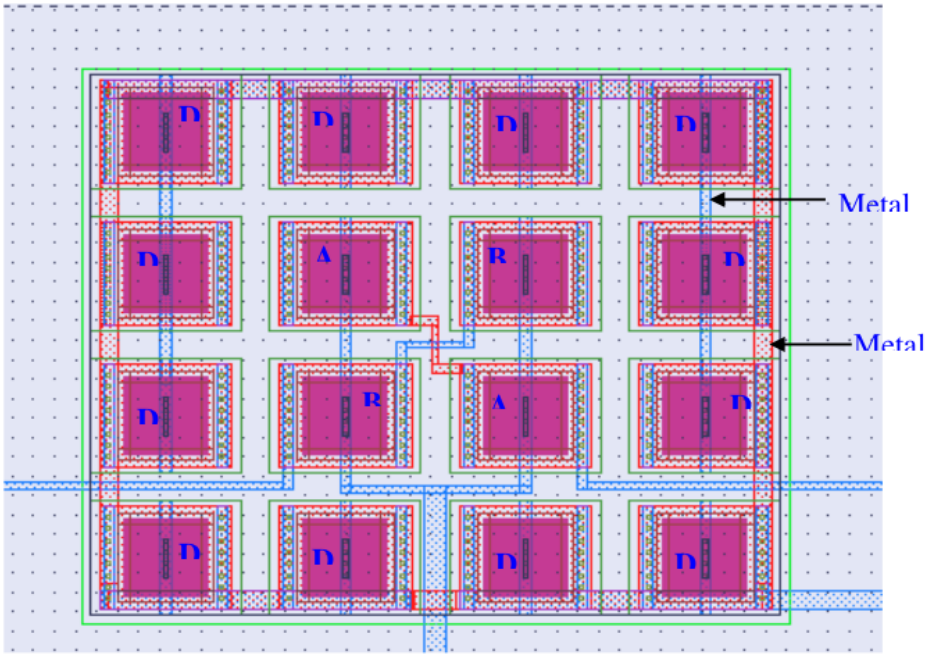

(b) Side by side layout

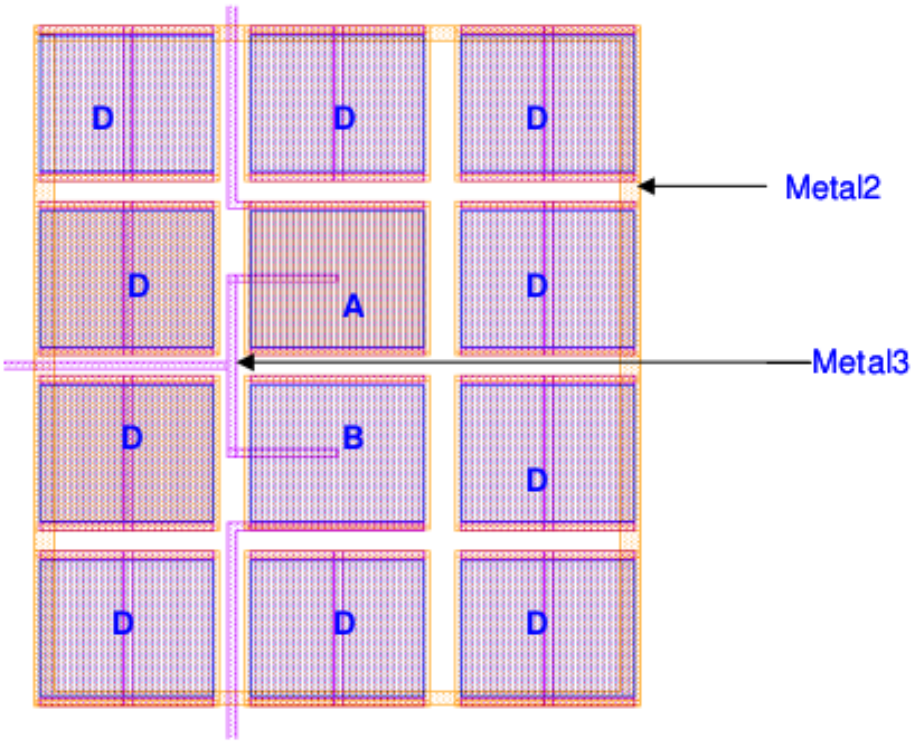

Sample layout of matched pair Resistors:

- Resistor “A” expected to be matched with Resistor “B”
- Total length of resistor “A” = 4* L.

- "D" are the dummy resistors not connected to the circuit

(a) Cross coupled type of layout

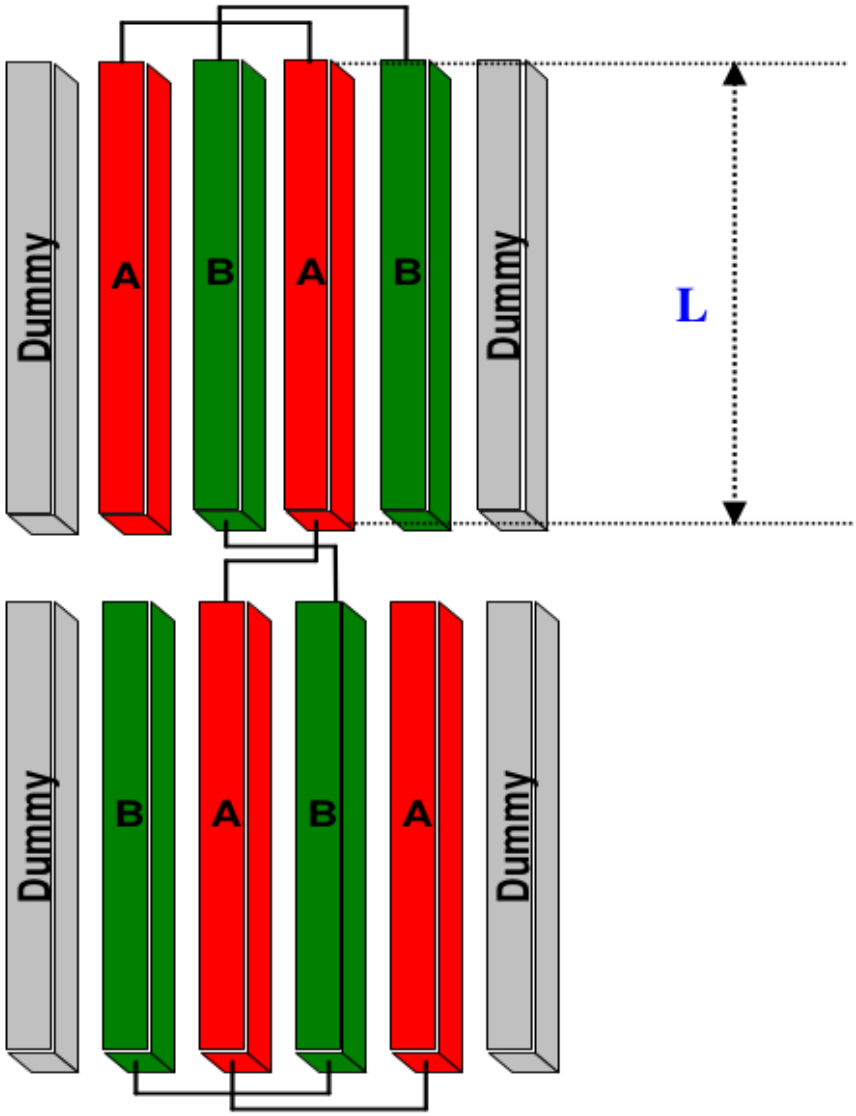

(b) Non-Interleaved type of layout.

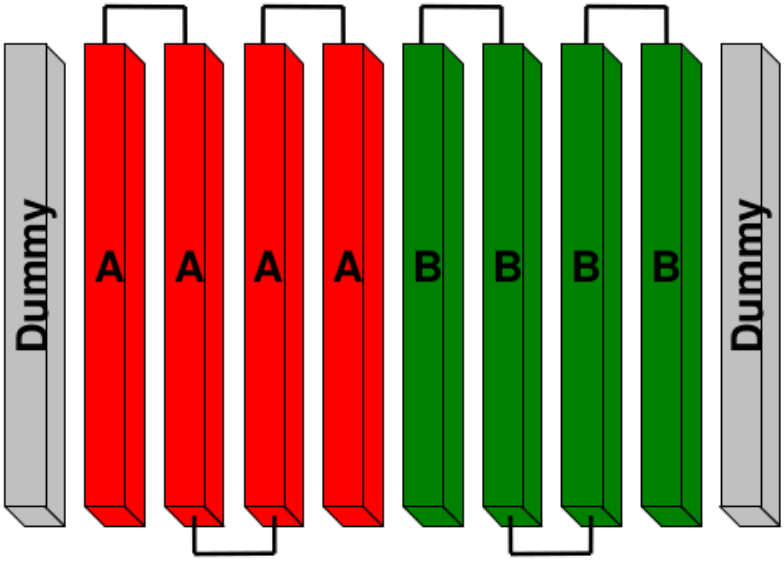

10.7 DRC_BJT Mark Layer

This layer is used to mark vertical NPN and PNP transistors to avoid design rule violation.

Table 36: DRC_BJT

RULE NO.	DESCRIPTION	LAYOUT RULE
Layer	DRC_BJT — Marking for Vertical NPN and PNP BJT	
BJT.1	Min. DRC_BJT overlap of DNWELL for NPN BJT	0
BJT.2	Min. DRC_BJT overlap of PCOM in Psub	0
BJT.3	Minimum space of DRC_BJT layer to unrelated COMP	0.1

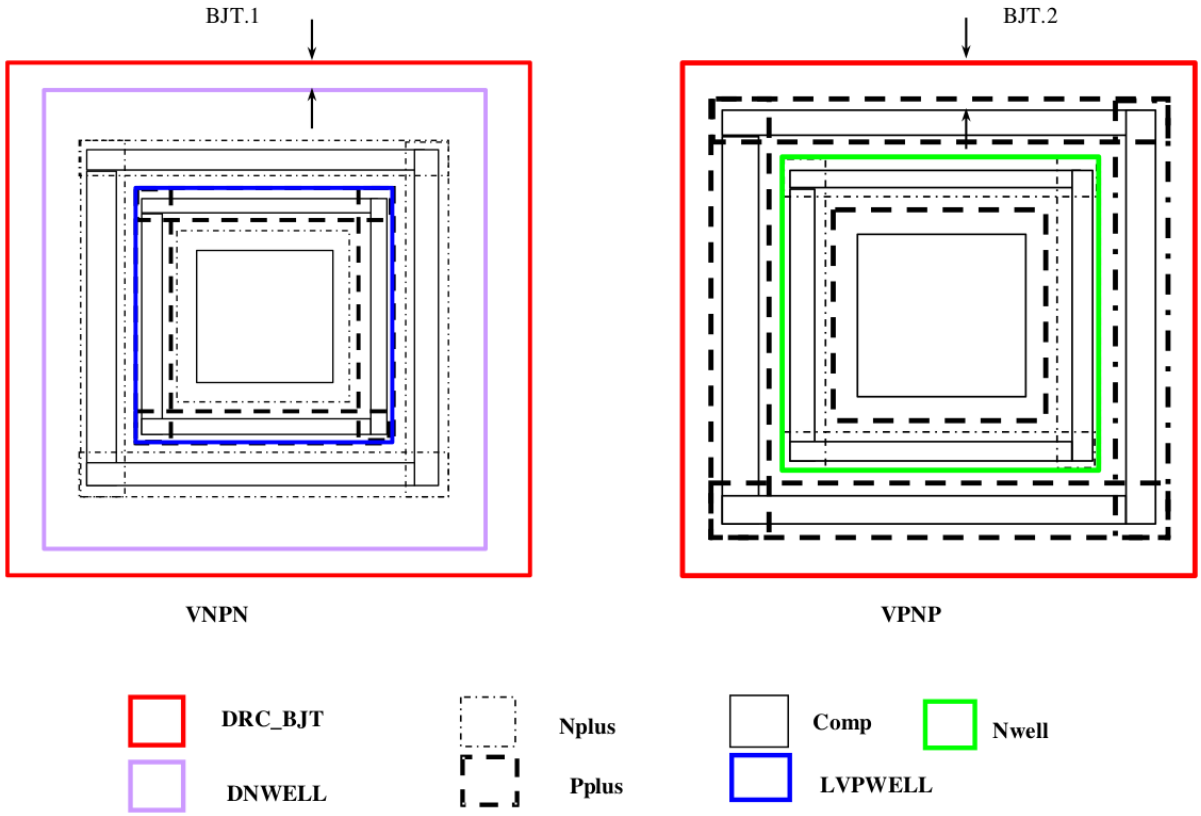

10.8 Design Rules for Dummy Exclude layers (NDMY and PMNDMY)

This section describes the design rules for drawing dummy exclude layers "NDMY" for excluding "Dummy COMP" and "PMNDMY" for excluding "Dummy Poly" and "Dummy metal" in that area. There shall be intended minimal use of NDMY layer in active transistor areas so as to provide better STI process margins and active transistor performance.

Table 37: Dummy Exclude layers

RULE NO.	DESCRIPTION	LAY-OUT RULE
DE.1*	Dummy COMP exclude and dummy poly/metal exclude layers shall be drawn only if necessary (for example for certain critical RF circuit area where RF coupling is critical). Other wise in normal analog and digital active circuits, the presence of "dummy COMP" Around it rather maintains the better Ioff performance of the transistors and junctions.	
DE.2	Minimum NDMY or PMNDMY size (x or y dimension in um)	0.8
DE.3	(c) Maximum NDMY size (um2)	15000
	(d) If size greater than 15000um2 then two sides should not be greater than (um).	80
DE.4	Minimum NDMY to NDMY space (Merge if space is less).	20

Note: * *Appendix B: Rules not coded*

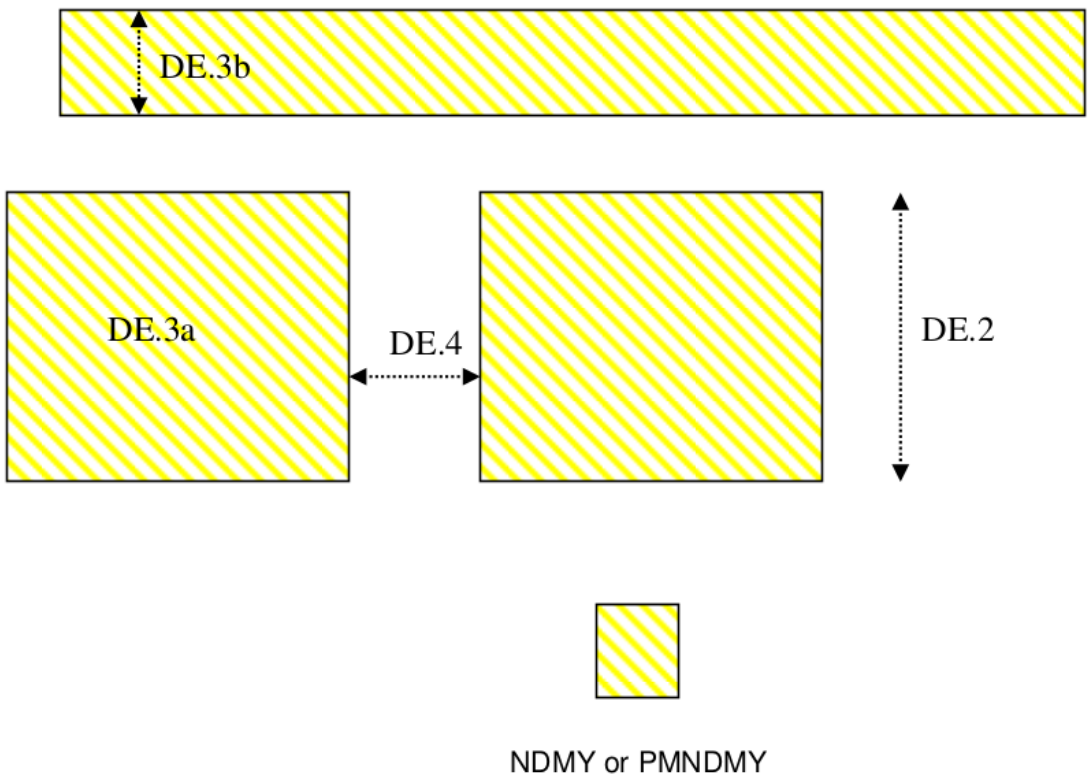

10.9 LVS_BJT Mark Layer

This layer is used in LVS tool to identify Emitter, Base, and Collector of NPN and PNP transistor.

Table 38: LVS_BJT

RULE NO.	DESCRIPTION	LAY-OUT RULE
Layer	LVS_BJT	
LVS_BJT.	Minimum LVS_BJT enclosure of NPN or PNP Emitter COMP layers	0

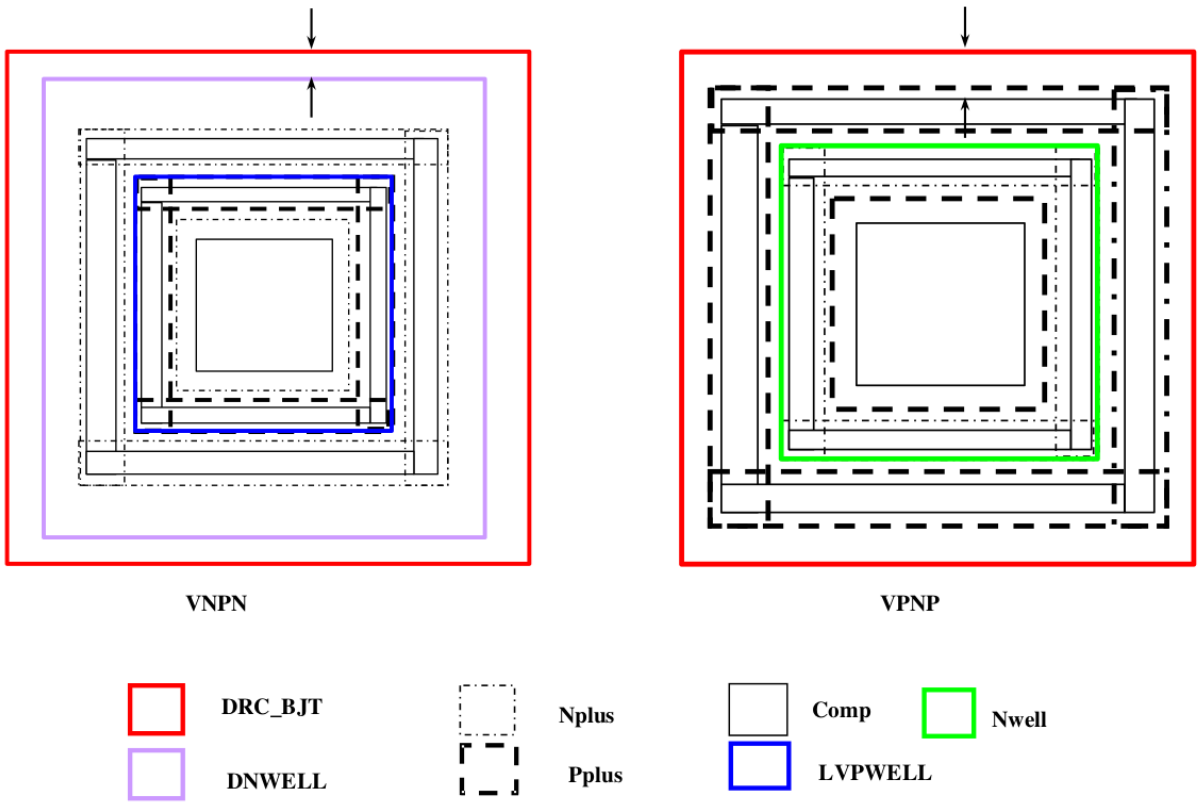

10.10 OTP_MK Mark Layer

This layer is used to mark 3.3V OTP cells. OTP cells with this marking layer should follow below specific rules which is different from 3.3V/(5V)6V rules.

Table 39: OTP_MK

RULE NO.	DESCRIPTION	LAYOUT RULE	
		3.3V OTP	5V OTP (1)
O.DF.3a	Min. COMP Space. P-substrate tap (PCOMP outside NWELL) can be butted for different voltage devices as the potential is same	0.24	0.24
O.DF.6	Min. COMP extend beyond poly2 (it also means source/drain overhang)	0.22	0.22
O.DF.9	Min. COMP area (um2)	0.1444	0.1444
O.PL.2	Min. poly2 width	0.22	0.22
O.PL.3a	Min. poly2 Space on COMP	0.18	0.18
O.PL.4	Min. extension beyond COMP to form Poly2 end cap	0.14	0.14
*O.PL.5	Min. space from field Poly2 to unrelated COMP. Min. space from field Poly2 to Guard-ring.	0	0
*O.PL.5	Min. space from field Poly2 to related COMP	0	0
O.SB.2	Min. salicide Block Space	0.28	0.28
O.SB.3	Min. space from salicide block to unrelated COMP	0.09	0.09
O.SB.4	Min. space from salicide block to contact	0.03	0.03
*O.SB.5	Min. space from salicide block to unrelated Poly2 on field	0	0
O.SB.5b	Min. space from salicide block to unrelated Poly2 on COMP	0.1	0*
O.SB.9	Min. salicide block extension beyond unsalicided Poly2	0.1	0.1
O.SB.11	Min. salicide block overlap with COMP	0.04	0.04
*O.SB.1	Min. salicide block overlap with Poly2	0	0
O.SB.13	Min. area of silicide block (um2)	1.488	2
*O.SB.1	Min. space from unsalicided Poly2 to unrelated Nplus/Pplus along Poly2 Line	0	0
O.CO.7	Min. space from COMP contact to Poly2 on COMP	0.13	0.13
O.PL.O1	Orientation-restricted gates must have the gate width aligned along the X-axis (poly line running horizontally) in reference to wafer notch down	DRC	NA

Note: * Rules allowed minimum overlap and spacing are 0, so DRC deck will not check those rules 1. Rule of 5V OTP is set by utilizing “V5_XTOR” and “OTP_MK” marking layer

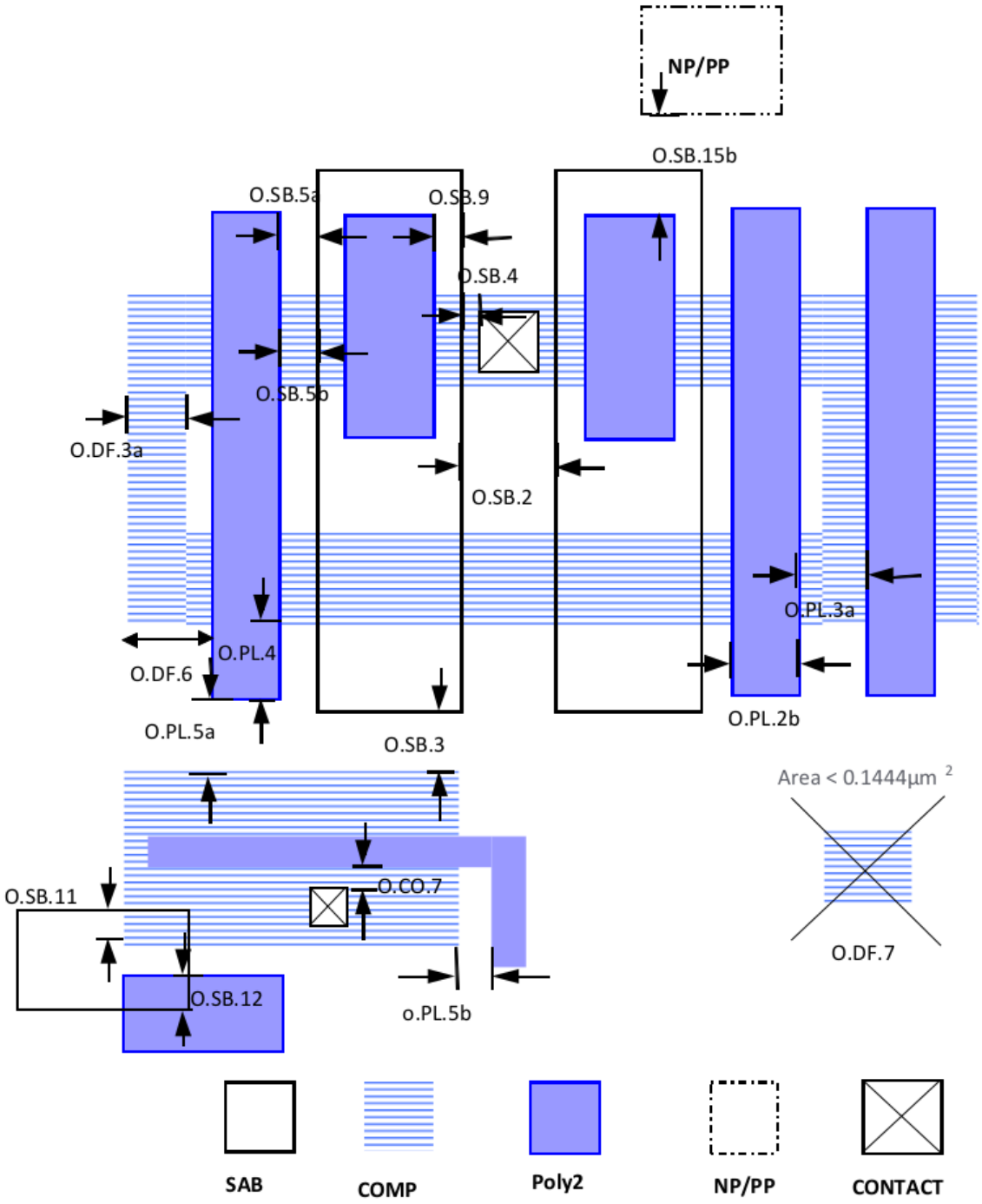
NP/PP
O.SB.15b
O.SB.5a
O.SB.9
O.SB.4
O.SB.5b
O.DF.3a
O.SB.2
O.PL.3a
O.PL.4
O.DF.6
O.PL.5a
O.SB.3
O.PL.2b
Area < 0.1444µm 2
O.SB.11
O.CO.7
O.DF.7
O.SB.12
o.PL.5b
SAB
COMP
Poly2
NP/PP
CONTACT

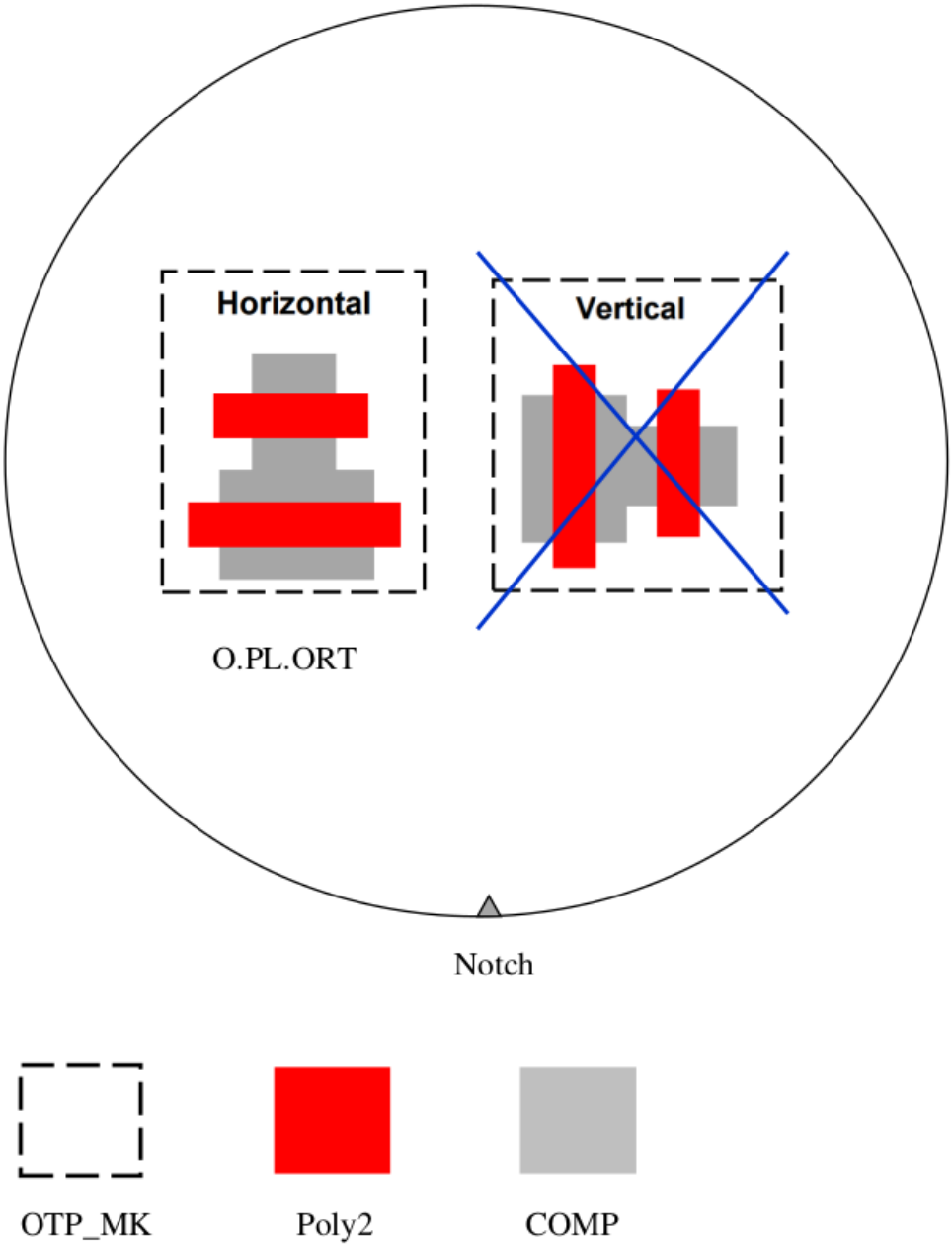

10.11 0.18um MCU eFuse Design Rules

This section describes the design rules for eFuse. Elements of eFuse are defined by PLFUSE layer (GDS# 125.5), LVS_Source layer (GDS# 100.8) and EFUSE_MK layer (GDS# 80.5), and definitions are as below:

- Whole eFuse: (Poly2 interact with PLFUSE) inside EFuse_MK and Pplus
- eFuse Link: (Poly2 and PLFUSE) inside EFUSE_MK
- Anode: (Poly2 and LVS_Source) inside EFUSE_MK
- Cathode: Poly2 inside EFUSE_MK not (LVS_Source or PLFUSE)

In normal application, eFuse Cathode is connected to program FET, program current flows from Anode to Cathode. After program, silicide migration happens and resistance will increase sharply.

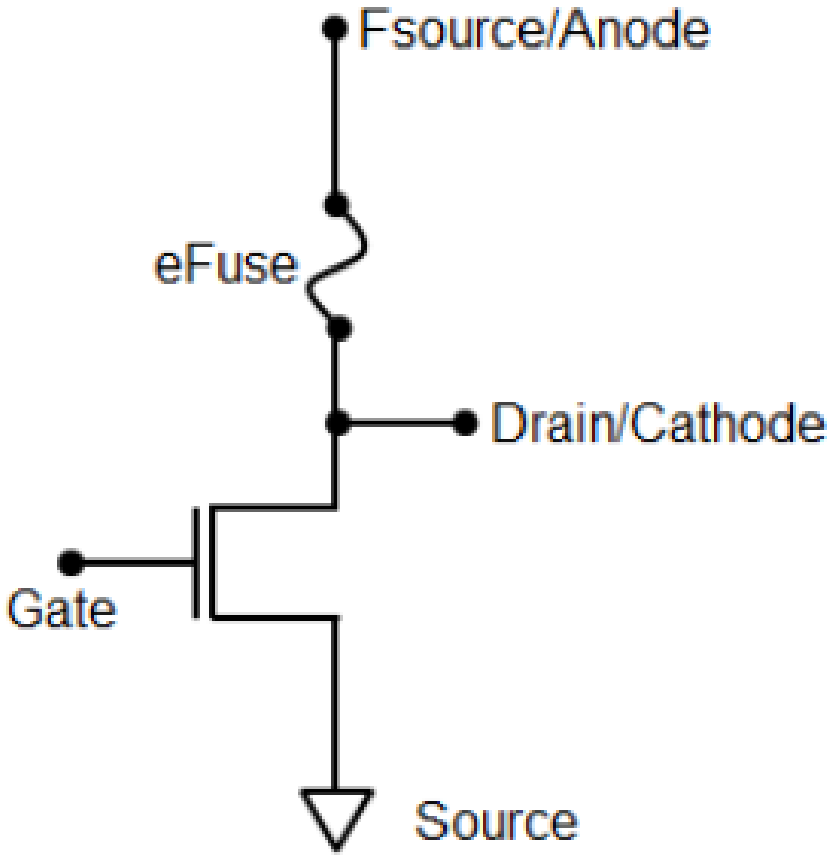

Table 40: 0.18um MCU eFuse

RULE NO.	DESCRIPTION	LAYOUT RULE
EF.01	Min. (Poly2 butt PLFUSE) within EFUSE_MK and Pplus	0
EF.02	Min. Max. PLFUSE width	0.18
EF.03	Min. Max. PLFUSE length	1.26
EF.04a	Min. Max. PLFUSE overlap Poly2 (coinciding permitted) and touch cathode and anode	0
EF.04b	PLFUSE must be rectangular	
EF.04c	Cathode Poly2 must be rectangular	
EF.04d	Anode Poly2 must be rectangular	
EF.05	Min. Max. LVS_Source overlap Poly2 (at Anode)	0
EF.06	Min. Max. Cathode Poly2 width	2.26
EF.07	Min. Max. Cathode Poly2 length	1.84
EF.08	Min. Max. Anode Poly2 width	1.06
EF.09	Min. Max. Anode Poly2 length	2.43
EF.10	Min. Cathode Poly2 to Poly2 space	0.26
EF.11	Min. Anode Poly2 to Poly2 space	0.26
EF.12	Min. Space of Cathode Contact to PLFUSE end	0.155
EF.13	Min. Space of Anode Contact to PLFUSE end	0.14
EF.14	Min. EFUSE_MK enclose LVS_Source	0
EF.15	NO Contact is allowed to touch PLFUSE	
EF.16a	Cathode must contain exact number of Contacts at each ends	4
EF.16b	Anode must contain exact number of Contacts at each ends	4
EF.17	Min. Space of EFUSE_MK to EFUSE_MK	0.26
EF.18	PLFUSE must sit on field oxide (NOT COMP), no cross with any COMP, Nplus, ESD, SAB, Resistor, Metal1, Metal2	
EF.19	Min. PLFUSE space to Metal1, Metal2	0
EF.20	Min. PLFUSE space to COMP, Nplus, ESD, SAB, Resistor	2.73
EF.21	Min. Max. eFUSE Poly2 length	5.53
EF.22a	Min. Max. Cathode Poly2 overlap with PLFUSE in width Direction	1.04
EF.22b	Min. Max. Anode Poly2 overlap with PLFUSE in width Direction	0.44

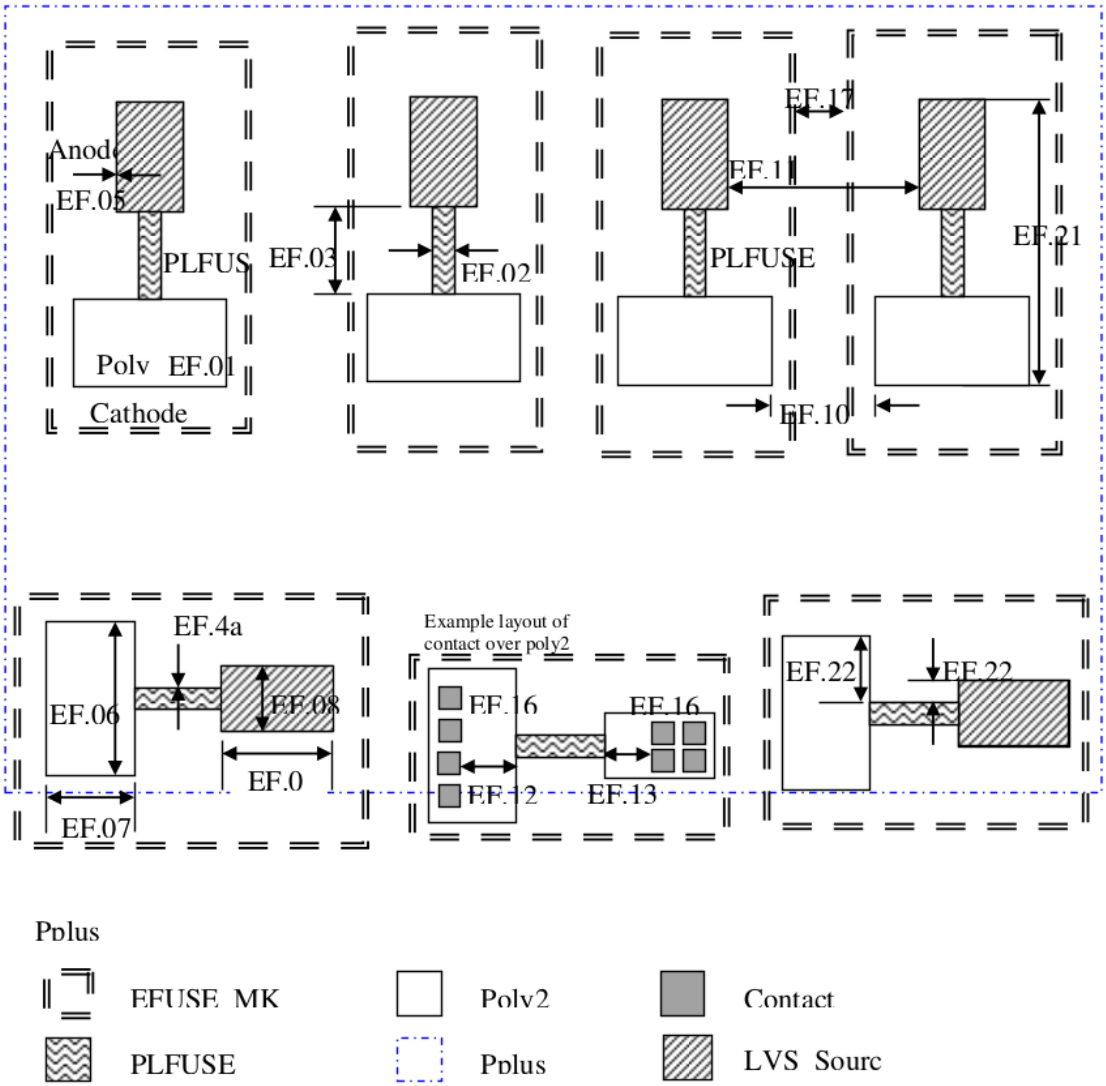

10.12 High Voltage LDMOS and related rules

10.12.1 10V LDNMOS rules

This is to define N type asymmetrical 10V LDMOS device (LDNMOS). Below is a summary table as how to identify the device. All this kind of device's well share the same potential with P-substrate.

Table 41: High Voltage LDMOS

Items	Layers or Logic operations for identifying the device and its nodes
LDNMOS	Device under LDMOS_XTOR with Dualgate and COMP, Poly2, MVSD
LDNMOS Drain	MVSD
LDNMOS Source	((Nplus AND COMP) Interact (((Poly2 AND Dualgate) AND LDMOS_XTOR) AND MVSD)) NOT Poly2
LDNMOS Channel Length	MVSD space to POLY2 edge in COMP
LDNMOS Channel Width	LDNMOS COMP width intersecting with (((POLY2 AND Dualgate) AND (LDMOS_XTOR Interact MVSD))"

Table 42: LDMOS RULES

Rule NO	Description	Layout Rule
MDN.1	Min MVSD width (for litho purpose)	1
MDN.2a	Min MVSD space [Same Potential]	1
MDN.2b	Min MVSD space [Diff Potential]	2
MDN.3a	Min transistor channel length	0.6
MDN.3b	Max transistor channel length	20
MDN.4a	Min transistor channel width	4
MDN.4b	Max transistor channel width	50
MDN.5ai	Min PCOMP (Pplus AND COMP) space to LDNMOS Drain MVSD (source and body tap non-butted) PCOMP (Pplus AND COMP) intercept with LDNMOS Drain MVSD is not allowed	1
MDN.5ai	Min PCOMP (Pplus AND COMP) space to LDNMOS Drain MVSD (source and body tap butted) PCOMP (Pplus AND COMP) intercept with LDNMOS Drain MVSD is not allowed	0.92
MDN.5b	Min PCOMP (Pplus AND COMP) space to LDNMOS Source (Nplus AND COMP) Use butted source and p-substrate tab otherwise and that is good for Latch-up immunity as well.	0.4
MDN.5c	Maximum distance of the nearest edge of the substrate tab from NCOMP edge	15
MDN.6	ALL LDNMOS shall be covered by Dualgate layer	
MDN.6a	Min Dualgate enclose NCOMP	0.5
MDN.7	Each LDNMOS shall be covered by LDMOS_XTOR (GDS#226) mark layer	
MDN.7a	Min LDMOS_XTOR enclose Dualgate	0
MDN.8a	Min LDNMOS drain MVSD space to any other equal potential Nwell space	1
MDN.8b	Min LDNMOS drain MVSD space to any other different potential Nwell space	2
MDN.9	Min LDNMOS drain MVSD space to NCOMP (Nplus AND COMP) outside LDNMOS drain MVSD	4
MDN.10	POLY2 rules	
MDN.10a	Min LDNMOS POLY2 width	1.2

continues on next page

Table 42 – continued from previous page

MDN.10b	Min POLY2 extension beyond COMP in the width direction of the transistor (other than the LDNMOS drain direction)	0.4
MDN.10c	Min/Max POLY2 extension beyond COMP on the field towards LDNMOS drain COMP Direction	0.2
MDN.10d	Min/Max POLY2 on field space to LDNMOS drain COMP	0.16
MDN.10e	Min POLY2 space to Psub tap (source and body tap non-butted)	0.4
MDN.10e	Min POLY2 space to Psub tap (source and body tap butted)	0.32
MDN.10f	Poly2 interconnect in HV region (LDMOS_XTOR marked region) not allowed. Also, any Poly2 interconnect with "poly2 to substrate" potential greater than 6V is not Allowed)	
MDN.11	Min/Max MVSD overlap channel COMP ((((LDMOS_XTOR AND MVSD) AND COMP) AND POLY2) AND Nplus)	0.4
MDN.12	Min MVSD enclose NCOMP in the LDNMOS drain and in the direction along the transistor width.	0.5
MDN.13	Wide width transistor can be used with multi finger type with following rules:	
MDN.13a	Max single finger width	50
MDN.13b	Layout shall have alternative source & drain	
MDN.13c	Both sides of the transistor shall be terminated by source	
MDN.13d	Every two poly fingers shall be surrounded by a P-sub guard ring. (Exclude the case when each LDNMOS transistor have full width butting to well tap)	
MDN.14	Min MVSD space to any DNWELL	6
MDN.15a	Min LDNMOS drain COMP width	0.22
MDN.15b	Min LDNMOS drain COMP enclose contact	0
MDN.16	Others unlisted layer like Nplus, Pplus, CONTACT, Metal, VIA, shall follow MV rules listed in section 7.0	
MDN.17	It is recommended to surround the LDNMOS transistor with non-broken Psub guard ring Guideline to improve the latch up immunity.	

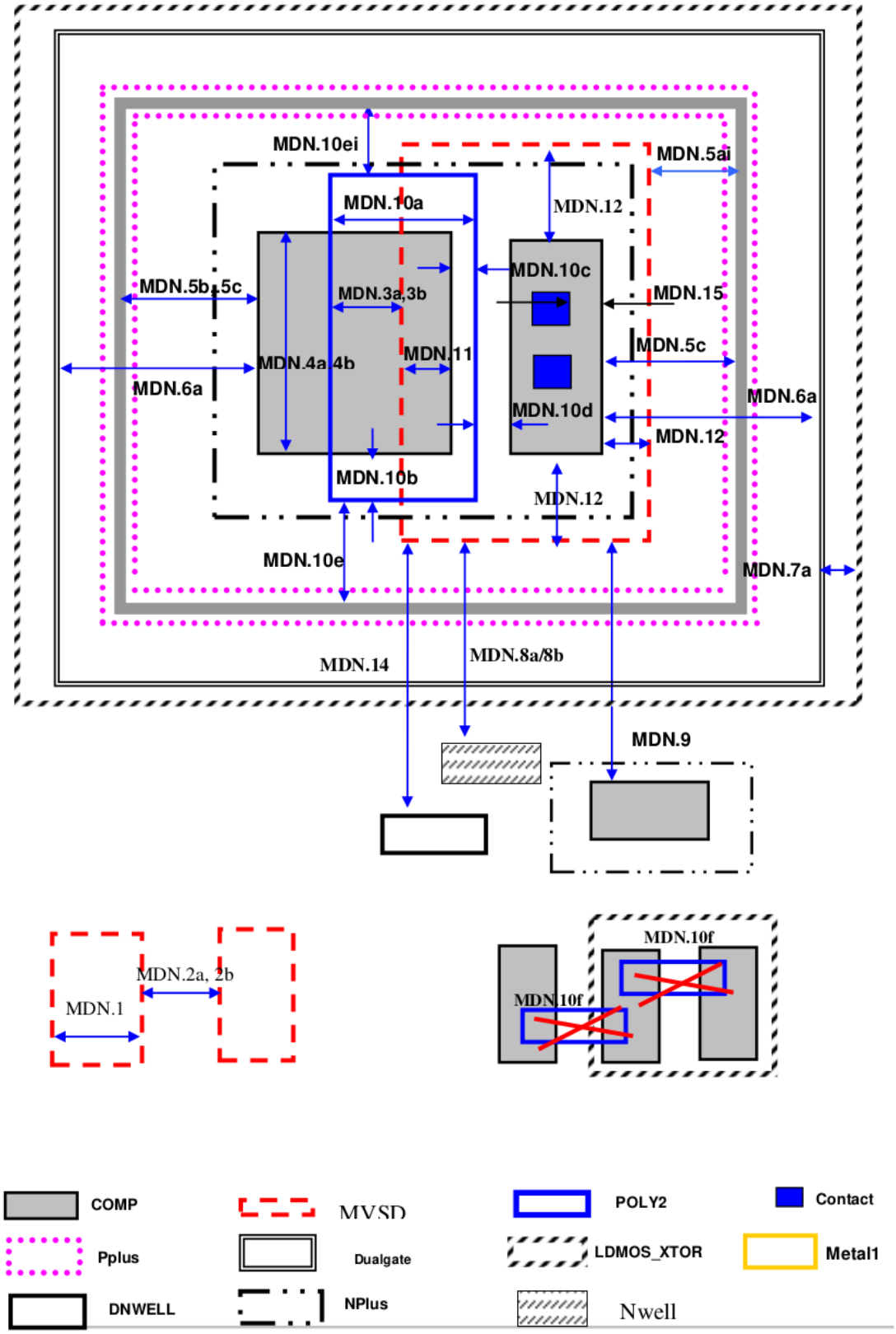
MDN.10ei
MDN.5ai
MDN.10a
MDN.12
MDN.10c
MDN.5b,5c
MDN.3a,3b
MDN.15
MDN.5c
MDN.4a,4b
MDN.11
MDN.6a
MDN.6a
MDN.10d
MDN.12
MDN.10b
MDN.12
MDN.10e
MDN.7a
MDN.14
MDN.8a/8b
MDN.9
MDN.2a, 2b
MDN.1
MDN.10f
MDN.10f
COMP
MVSD
POLY2
Contact
Pplus
Dualgate
LDMOS_XTOR
Metal1
DNWELL
NPlus
Nwell

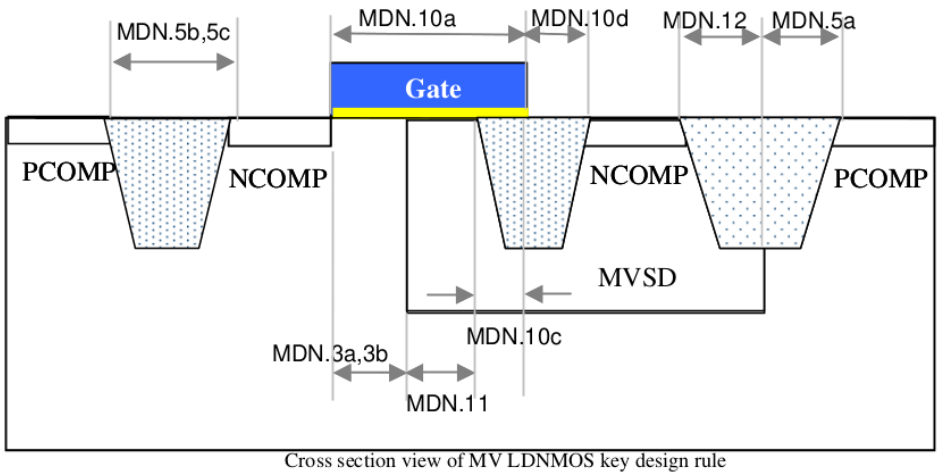

Cross section view of MV LDNMOS key design rule

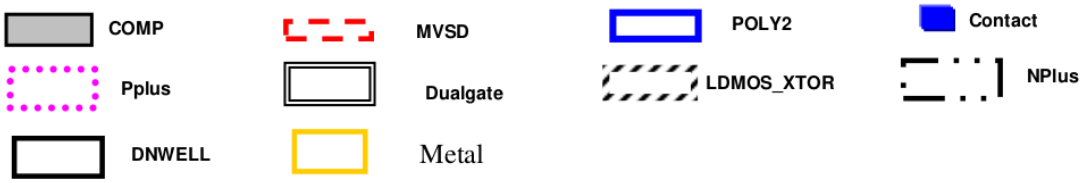

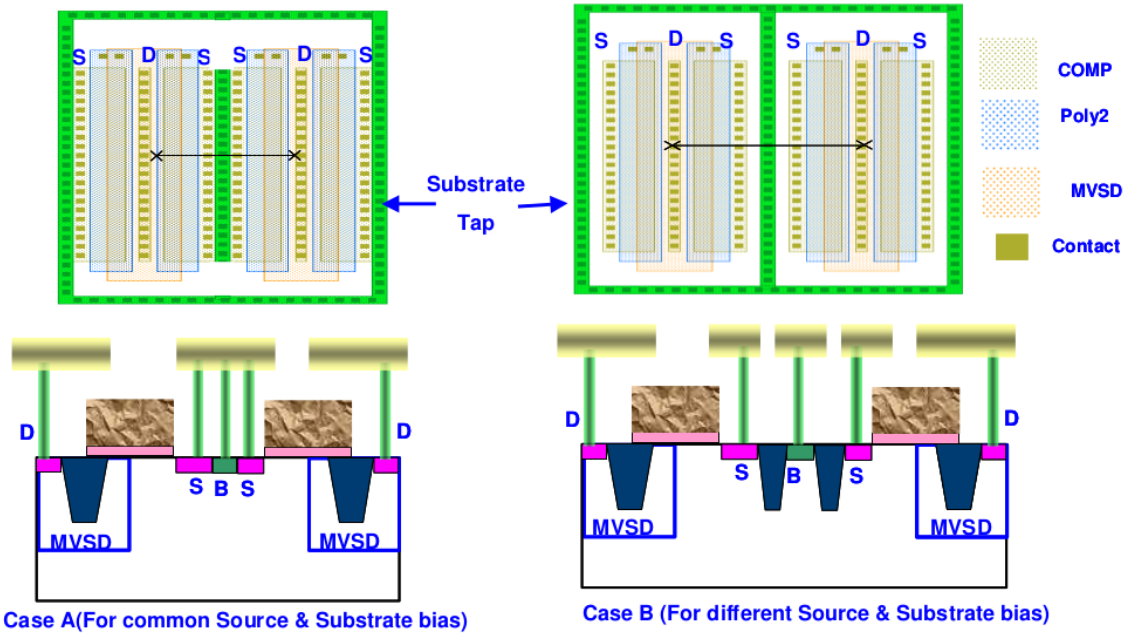

Rule MDN.13d when each LDNMOS transistor has full width butting to well tap

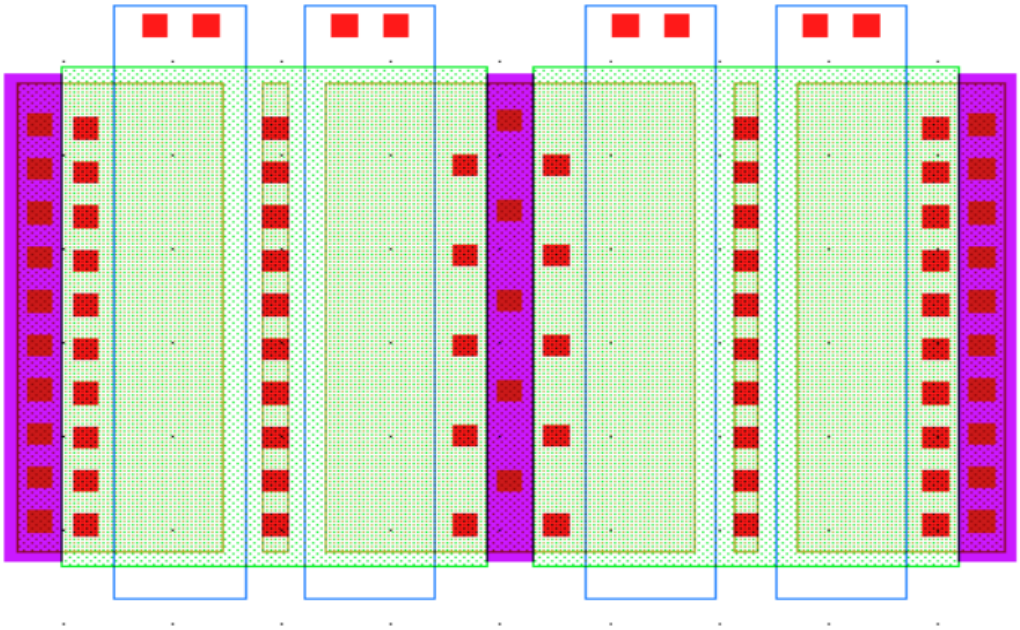

In below example, not every transistor has full width butting to well tap, it violate rule MDN.13d

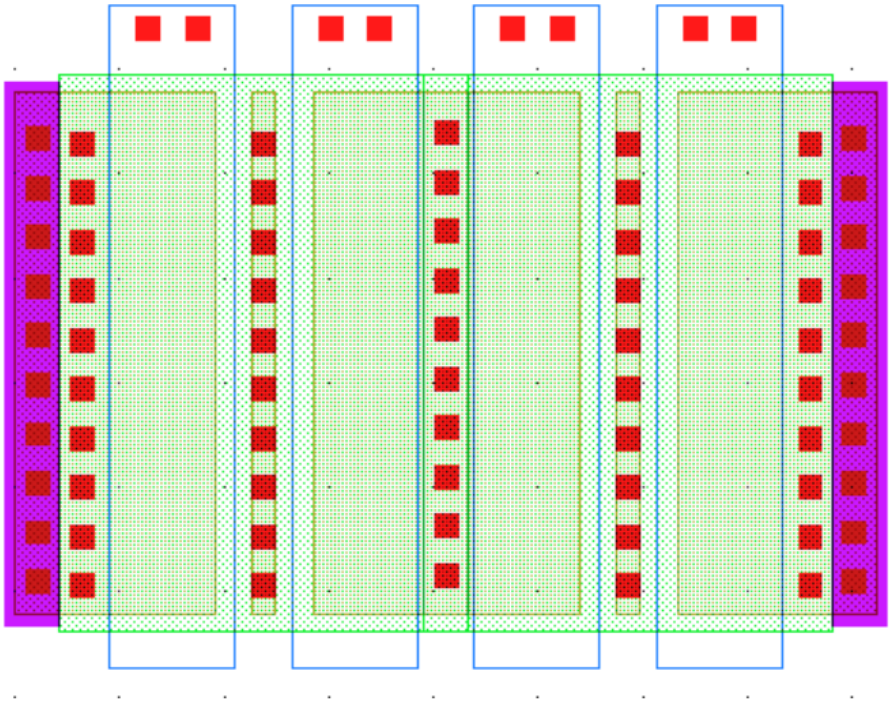

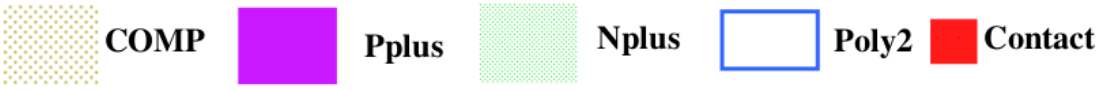

10.12.2 10V LDPMOS rules

This is to define P type asymmetrical 10V LDMOS device (LDPMOS) Below is a summary table as how to identify the device.

Table 43: LDPMOS

Items	Layers or Logic operations for identifying the device and its nodes
LDPMOS	Device under LDMOS_XTOR with Dualgate and COMP, Poly2, MVPSD
LDPMOS Drain	MVPSD
LDPMOS Source	((Pplus AND COMP) Interact (((Poly2 AND Dualgate) AND LDMOS_XTOR) AND MVPSD)) NOT Poly2
LDPMOS Channel Length	MVPSD space to POLY2 edge in COMP
LDPMOS Channel Width	LDPMOS COMP width intersecting with (((POLY2 AND Dualgate) AND (LDMOS_XTOR Interact MVPSD))

Table 44: LDPMOS rules

Rule NO	Description	Layout Rule
MDP.1	Minimum transistor channel length	0.6
MDP.1a	Max transistor channel length	20
MDP.2	Minimum transistor channel width	4
MDP.3	Each LDPMOS shall be surrounded by non-broken Nplus guard ring inside DNWELL. Nplus guard ring shall be connected to the highest potential. It is better to put wider than minimum guard ring for latch-up prevention if LDNMOS and LDPMOS are adjacent to each other (refer to latch-up guidelines in section 14.5.4).	
MDP.3ai	Min NCOMP (Nplus AND COMP) space to MVPSD (source and body tap non-butted) NCOMP (Nplus AND COMP) intercept with MVPSD is not allowed	1
MDP.3aii	Min NCOMP (Nplus AND COMP) space to MVPSD (source and body tap butted) NCOMP (Nplus AND COMP) intercept with MVPSD is not allowed	0.92
MDP.3b	Min NCOMP (Nplus AND COMP) space to PCOMP in DNWELL (Pplus AND COMP AND DNWELL). Use butted source and DNWELL contacts otherwise and that is best for Latch-up immunity as well	0.4
MDP.3c	Maximum distance of the nearest edge of the DNWELL tab (NCOMP inside DNWELL) from PCOMP edge (PCOMP inside DNWELL)	15

continues on next page

Table 44 – continued from previous page

MDP.3d	The metal connection for the Nplus guard ring recommended to be continuous, The maximum gap between this metal if broken Note: To put maximum number of contact under metal for better manufacturability and reliability	10
MDP.4	DNWELL covering LDPMOS shall be surrounded by non broken Pplus guard The metal connection for the Pplus guard ring recommended to be continuous, The maximum gap between this metal if broken. Note: To put maximum number of contact under metal for better manufacturability and Reliability	10
MDP.4a	Min PCOMP (Pplus AND COMP) space to DNWELL	2.5
MDP.4b	Maximum distance of the nearest edge of the DNWELL from the PCOMP Guard ring outside DNWELL	15
MDP.5	Each LDPMOS shall be covered by Dualgate layer,	
MDP.5a	Minimum Dualgate enclose Plus guarding ring PCOMP (Pplus AND COMP)	0.5
MDP.6	Each LDPMOS shall be covered by LDMOS_XTOR (GDS#226) layer	
MDP.6a	Minimum LDMOS_XTOR enclose Dualgate	0
MDP.7	Minimum LDMOS_XTOR (GDS#226) layer space to Nwell outside LDMOS_XTOR	2
MDP.8	Minimum LDMOS_XTOR (GDS#226) layer space to NCOMP (Nplus AND COMP) outside LDMOS_XTOR (GDS#226)	1.5
MDP.9	POLY2 rules	
MDP.9a	Min LDPMOS POLY2 width (POLY2 inside DNWELL AND LDMOS_XTOR (GDS#226))	1.2
MDP.9b	Min POLY2 extension beyond COMP in the width direction of the transistor (other than the LDMOS drain direction)	0.4
MDP.9c	Min/Max POLY2 extension beyond COMP on the field towards LDPMOS drain (MVPSD AND COMP AND Pplus NOT POLY2) direction	0.2
MDP.9d	Min/Max POLY2 on field to LDPMOS drain COMP (MVPSD AND COMP AND Pplus NOT POLY2) space	0.16
MDP.9ei	Min LDMPOS gate Poly2 space to Nplus guardring (source and body tap non-Butted)	0.4
MDP.9eii	Min LDMPOS gate Poly2 space to Nplus guardring (source and body tap butted)	0.32
MDP.9f	Poly2 interconnect is not allowed in LDPMOS region (LDMOS_XTOR marked Region)	
MDP.10	Min/Max MVPSD overlap onto the channel (LDMOS_XTOR AND COMP AND POLY2 AND Pplus)	0.4
MDP.10a	Min MVPSD space within LDMOS_XTOR marking [diff potential]	2
MDP.10b	Min MVPSD space [same potential] Merge if space less than 1um	1
MDP.11	Min MVPSD enclosing PCOMP in the drain (MVPSD AND COMP NOT POLY2) direction and in the direction along the transistor width.	0.8
MDP.12	Min DNWELL enclose Nplus guard ring (NCOMP)	0.66
MDP.13	Wide width transistor can be used with multi finger with following rules	
MDP.13a	Max single finger width	50
MDP.13b	Layout shall have alternative source & drain	
MDP.13c	Both sides of the transistor shall be terminated by source	
MDP.14	Others unlisted layer like Nplus, Pplus, Nwell, Contact, Metal, VIA, shall follow MV rules listed in section 7.0	
MDP.15	Min “DNWELL enclosing MVPSD” to any DNWELL spacing	6
MDP.16a	Min LDPMOS drain COMP width	0.22
MDP.16b	Min LDPMOS drain COMP enclose contact	0

continues on next page

Table 44 – continued from previous page

MDP.17 (a) For better latch up immunity, it is necessary to put DNWELL guard ring Check DRC Between “MVPSD Inside DNWELL covered by LDMOS_XTOR” and NCOMP (outside DNWELL and outside Nwell) when spacing between them is less than 40um (b) Layout for DNWELL guard ring shall follow rule DN.1, DN.2a, DN.2b, DN.3, DF.4b, DF.18, and MDP.15. (c) DNWELL guard ring shall have NCOMP tab to be connected to highest Potential. (d) DNWELL guard ring length shall be bigger than the width of “MVPSD inside Check DRC DNWELL” and NCOMP.

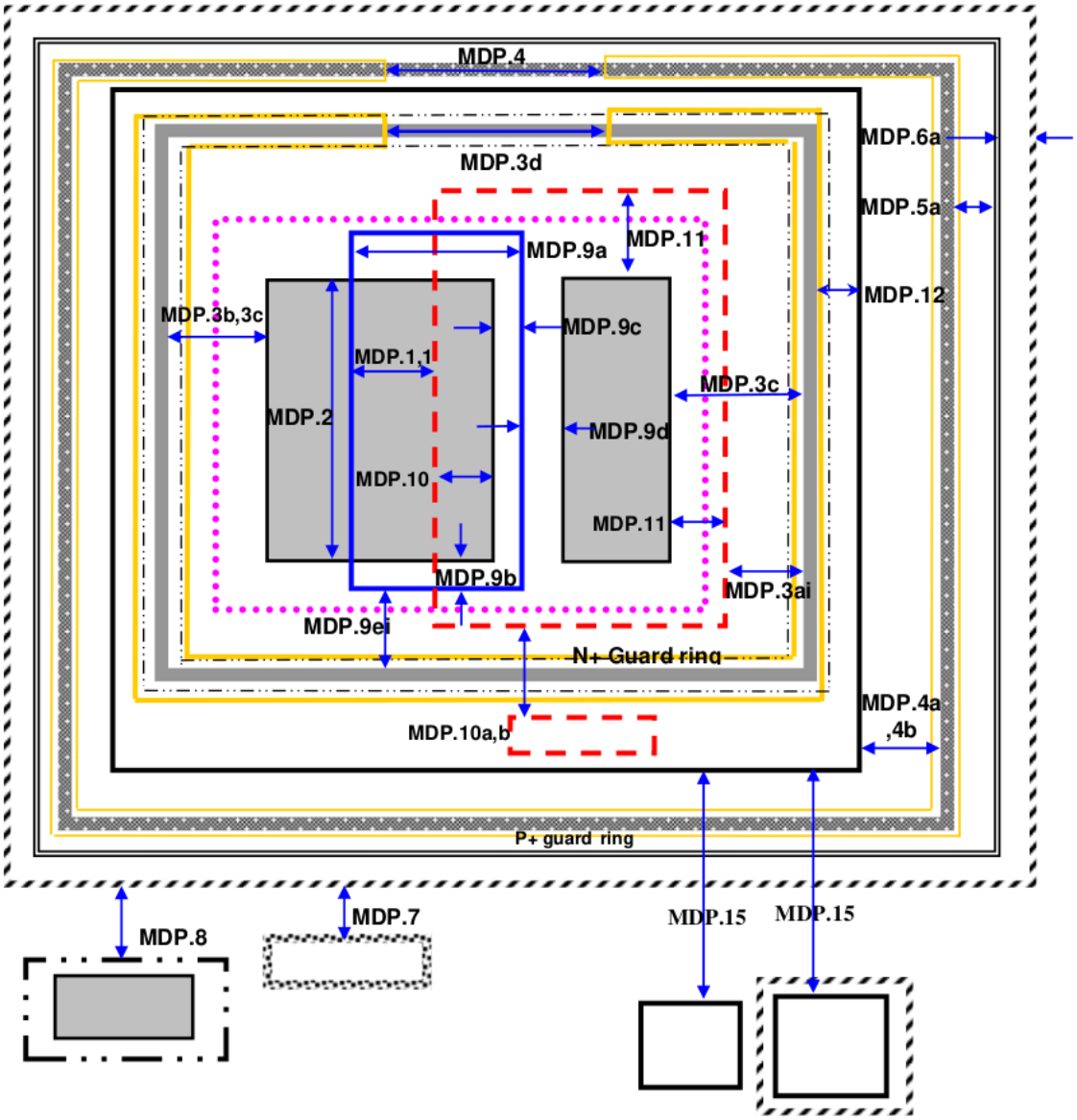

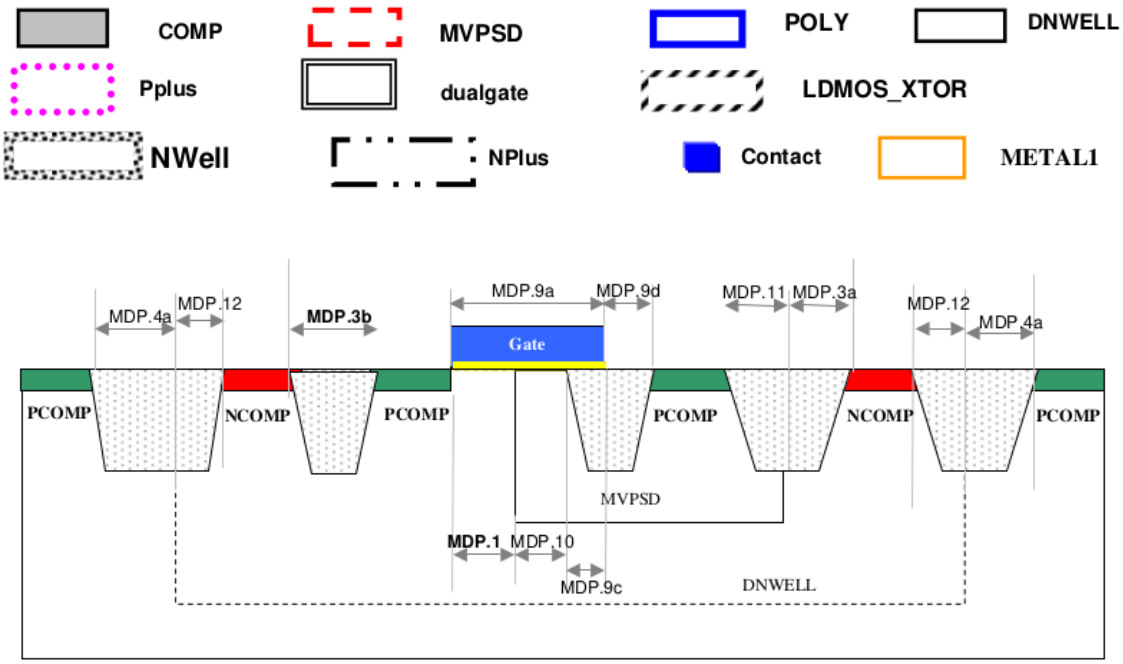
COMP
MVPSD
POLY
DNWELL
Pplus
dualgate
LDMOS_XTOR
NWell
NPlus
Contact
METAL1
MDP.4a
MDP.12
MDP.3b
MDP.9a
MDP.9d
MDP.11
MDP.3a
MDP.12
MDP.4a
Gate
PCOMP
NCOMP
PCOMP
PCOMP
NCOMP
PCOMP
MVPSD
MDP.1
MDP.10
MDP.9c
DNWELL

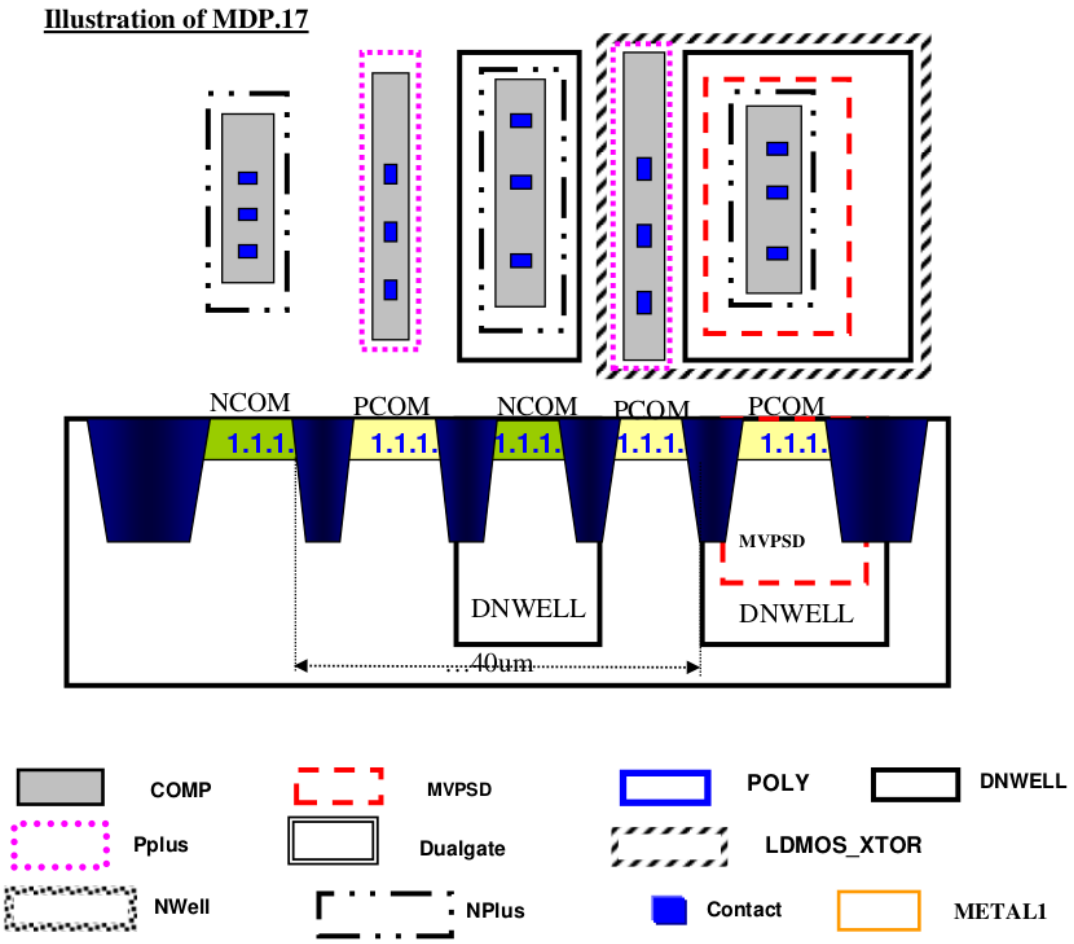

10.13 YMTP_MK Mark Layer Rules

This layer is used to mark YMTP cell only. MTP cells with this marking layer should follow below specific rules which is different from 3.3V/(5V)6V rules. This layer is strictly not to be use for other purpose.

Table 45: YMTP_MK

RULE NO.	DESCRIPTION	LAYOUT	
		3.3V	5V/6V
Y.N	Min. Nwell Space (Outside DNWELL, Inside YMTP_MK) [Different potential]	1	1
Y.DF.4d	(Nwell overlap of NCOMP) outside DNWELL (inside YMTP_MK) is allowed		
Y.DF.6	Min. COMP extend beyond gate (it also means source/drain overhang) inside YMTP_MK	NA	0.15
Y.DF.16	Min. space from (Nwell outside DNWELL) to (unrelated NCOMP outside Nwell and DNWELL) (inside YMTP_MK)	0.27	0.23
Y.PL.1	Interconnect Width (inside YMTP_MK)	0.13	NA
Y.PL.2	Gate Width (Channel Length) (inside YMTP_MK)	0.13	0.47
Y.PL.4	Poly2 extension beyond COMP to form Poly2 end cap (inside YMTP_MK)	NA	0.16
Y.PL.5a	Space from field Poly2 to unrelated COMP (inside YMTP_MK) Spacer from field Poly2 to Guard-ring (inside YMTP_MK)	0.04	0.2
Y.PL.5b	Space from field Poly2 to related COMP (inside YMTP_MK)	0.04	0.2
Y.PL.6	90 deg bends on the COMP are not allowed (except YMTP_MK)		
Y.LU.3	This rule is to check: (a) Max. Psub tap space to every point on the boundary of NCOMP outside NWELL. (b) For within 50um from the (NCOMP in Psub), Minimum NWELL to (NCOMP outside Nwell) space is defined as y, (c) If y <1.0um, then Max. Psub tap space to every point on the boundary of NCOMP outside NWELL. (inside YMTP_MK)	20	NA

Note: * Rules allowed minimum overlap and spacing are 0, so DRC deck will not check those rules

10.14 Schottky Diode

This section describes the schottky diode for this process. Schottky diode is formed by Co-salicidation and N-type silicon inside DNWELL. Its anode is the COMP under Schottky_diode marking but without Nplus. Its cathode is the NCOMP covered by Schottky_diode marking. Schottky_diode layer can exist both in LV or MV area.

Multi finger devices should be used for lower forward series resistance. Fill whole of anode and cathode COMP with maximum number of contacts to minimize series resistance. Metal width for anode and cathode connections should be maximized.

Table 46: Schottky Diode

RULE NO.	DESCRIPTION	LAYOUT RULE
Definitions	Anode COMP = (COMP AND Schottky_diode) NOT Nplus Cathode COMP = (COMP AND Schottky_diode) AND Nplus	
Definitions	Diode area = Anode area = (COMP AND Schottky_diode) NOT (Nplus OR Pplus)	Mainly for LVS
SK.1	Min "Schottky_diode" marking layer width	0.6
SK.2	Min "Schottky_diode" marking layer space	0.6
SK.3	Min "Schottky_diode" marking layer enclose schottky diode anode and cathode COMP	0.16
SK.4	Schottky diode shall need both cathode and anode a) Only Cathode COMP or only Anode COMP under "Schottky_diode" Marking is not allowed B) "Schottky_diode" without COMP is not allowed.	
SK.5	Min/Max schottky diode's anode COMP to cathode COMP space	0.28
SK.6	Min. Schottky diode Anode COMP to Nplus space	0.16
SK.7	Min. Schottky diode Anode COMP to Pplus space	0.16
SK.8	Min. Schottky diode outside DNWELL is not allowed	
SK.9	Min. DNWELL enclose schottky diode Anode COMP	1.4
SK.10	Min. "Schottky_diode" space to PCOMP	0.8
SK.11	Min. "Schottky_diode" space to LVPWELL	0.9
SK.12	Poly2 intersect with Schottky_diode mark layer is not allowed	
SK.14	a) Two anode COMP area must be separated by cathode COMP in the anode width direction (two anode comp can not exist side by side without having cathode COMP in between). B) Cathode COMP length cannot be shorter than that of anode COMP length.	
SK.15	Min. Anode COMP to Nwell space	0.16
SK.16	Min/Max schottky diode anode width (shorter dimension of schottky diode anode COMP) (This is for model accuracy of schottky diode)	0.62
SK.17	Each anode must have cathode on both sides of anode width direction	

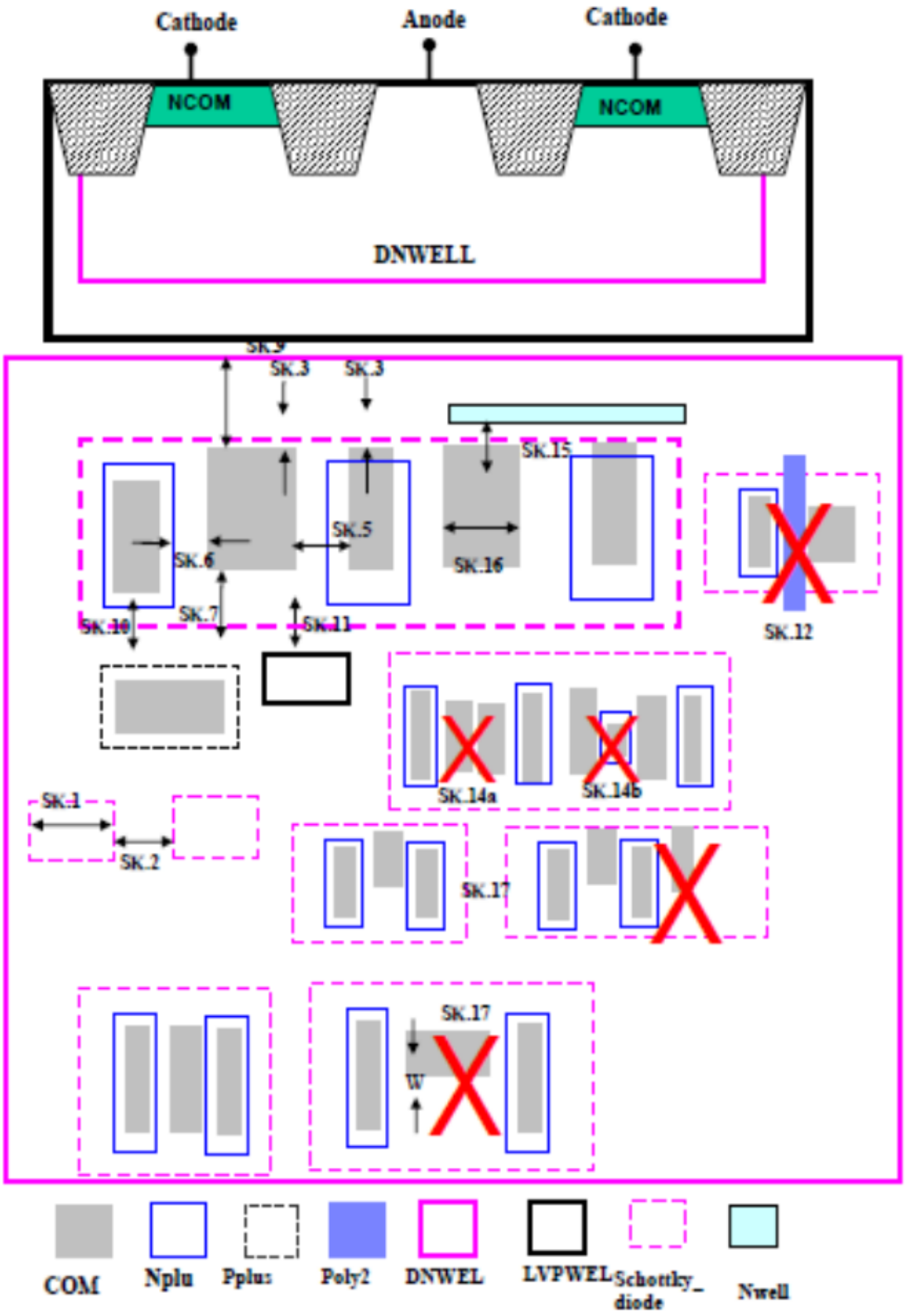
Cathode
Anode
Cathode
NCOM
NCOM
DNWELL
SK.3
SK.3
SK.15
SK.5
SK.6
SK.16
SK.7
SK.10
SK.11
SK.12
SK.14a
SK.14b
SK.1
SK.2
SK.17
SK.17
W
COM
Nplu
Pplus
Poly2
DNWEL
LVPWEL
Schottky_diode
Nwell

10.15 NEO_EE_MK Layer

This layer is used to mark 3.3V NeoEE cells. NeoEE cells with this marking layer should follow below specific rules which is different from 3.3V/(5V)6V rules.

Table 47: NEO_EE_MK

RULE NO.	DESCRIPTION	LAYOUT RULE
		3.3V
EE.DF.4d *LD-MOS	Min Nwell overlap of NCOMP (Outside DNWELL only)	0
EE.DF.16 *LD-MOS	Min space from NWELL (outside DNWELL) to NCOMP outside Nwell and DNWELL = 0	0
EE.NP.5a	Nplus overlap of N-channel gate = 0	0
EE.PP.5a	Pplus overlap of P-channel gate = 0	0
EE.NP.6	Nplus overlap with NCOMP butted PCOMP = 0.14	0.14
EE.PP.6	Pplus Implant overlap with PCOMP butted to NCOMP = 0.14	0.14
EE.NP.7	Nplus space to unsalicided Poly2 = 0.17	0.17
EE.PP.7	Pplus Implant space to unsalicided Poly2 = 0.08	0.08
EE.NP.9	Nplus overlap of unsalicided Poly2 = NA	NA
EE.PP.9	Pplus Implant overlap of unsalicided Poly2 = NA	NA
EE.NP.10	Nplus overlap of unsalicided COMP = NA	NA
EE.PP.10	Pplus Implant overlap of unsalicided COMP = NA	NA
EE.NP.12	Nplus overlap with P-channel poly gate extension is forbidden within 0.32um of P-channel gate	NA
EE.PP.12	Pplus Implant overlap with N-channel poly gate extension is forbidden within 0.32um of N-channel gate	NA
EE.PL.2_	Min gate width (Channel length) = NA	NA
EE.PL.6	Poly2 90 degree bends on COMP are not allowed	NA
EE.SB.10	Poly2 extension beyond related Salicide Block = 0.14	0.14
EE.SB.11	Salicide Block overlap with COMP = 0.12	0.12
EE.SB.12	Salicide Block overlap with Poly2 outside ESD_MK = 0.21	0.21
EE.SB.14	Space from unsalicided Nplus Poly2 to unsalicided Pplus Poly2 = NA	NA
EE.SB.14	Space from unsalicided Nplus Poly2 to P-channel gate = NA	NA
EE.SB.16	SAB layer cannot exist on 3.3V and 5V/6V CMOS transistor's Poly and COMP area of the core ciruit (Excluding the transistors used for ESD purpose). It can only exist on CMOS transistors marked by LVS_IO, OTP_MK, ESD_MK layers.	NA
EE.LU.4b	Max. Nwell tap space to any point in the boundary of Pcomp inside Nwell = 30 (LV) For Nwell to (Ncomp outside Nwell) space >= 1.0um and < 2.0um	NA
EE.LU.4c	Max. Nwell tap space to any point in the boundary of Pcomp inside Nwell = 15 (LV) For Nwell to (Ncomp outside Nwell) space < 1.0um	NA
EE.LVES	LV MOSFET used for ESD protection should be enclosed by ESD_MK, ESD_MK must enclose well pick-up implant Debug1 : Mosfet with SAB but no LVS_IO, OTP_MK or ESD_MK	NA

4.1.11 11.0 SRAM Core Cells

11.1 5V SRAM

SramCore layer is used to mark SRAM cells. 5V SRAM cells with marking layer V5_XTOR should follow below specific rules which is different from 3.3V/(5V)6V rules.

Table 48: SRAM RULES

RULE NO.	DESCRIPTION	LAYOUT RULE (5V)
S.DF.4c_	Min. (Nwell overlap of PCOMP) outside DNWELL	0.45
S.DF.6_M	Min. COMP extend beyond gate (it also means source/drain overhang)	0.32
S.DF.7_M	Min. (LVPWELL Spacer to PCOMP) inside DNWELL	0.45
S.DF.8_M	Min. (LVPWELL overlap of NCOMP) Inside DNWELL	0.45
S.DF.16_	Min. space from (Nwell outside DNWELL) to (NCOMP outside Nwell and DNWELL).	0.45
S.PL.5a_	Space from field Poly2 to unrelated COMP Spacer from field Poly2 to Guard-ring	0.12
S.PL.5b_	Space from field Poly2 to related COMP	0.12
S.CO.4_M	COMP overlap of contact	0.04

Below Cell Description provides information about SRAM cell (1) and transistors.

Cell name	13P5
Cell horizontal (X) dimension	3
Cell vertical (Y) dimension	4.5
Cell area (mm2)	13.5
Grid	0.005
Cell pull-up PMOS transistor (W/L) (2)	0.6/0.6
Cell pull-down NMOS transistor (W/L) (2)	0.95/0.6
Cell pass-gate NMOS transistor (W/L) (2)	0.6/0.77
Beta ratio (pull-down W/L over pass-gate W/L)	2.03

1. SRMA devices are allowed to be inside or outside of DNWELL.
2. SRAM devices follow the logic 5V/6V SPICE models.

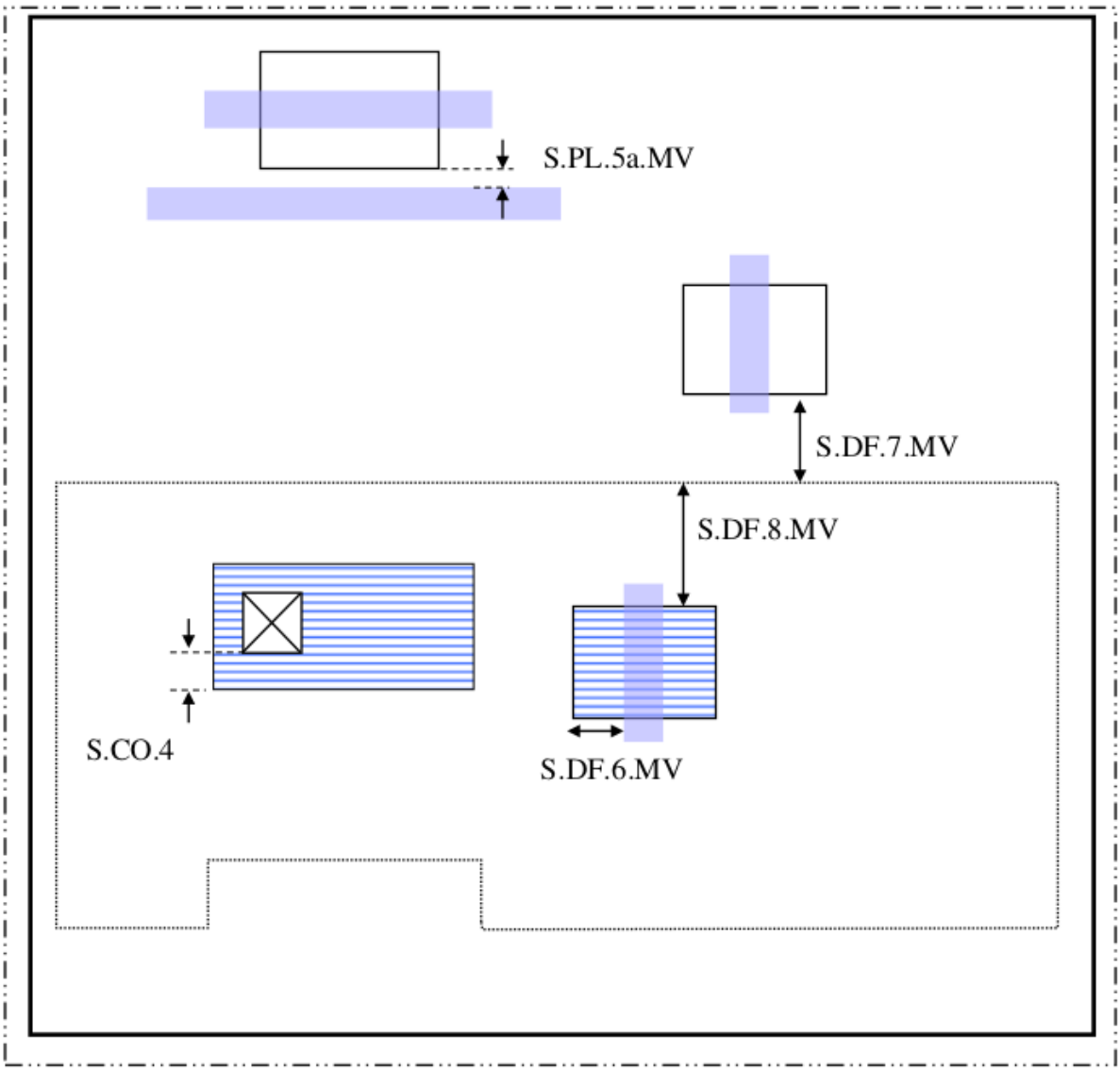
S.PL.5a.MV
S.DF.7.MV
S.DF.8.MV
S.CO.4
S.DF.6.MV

NCOMP
PCOMP
Poly2
Contact
LVPWELL
SramCore

11.2 3.3V SRAM

SramCore layer is used to mark SRAM cells. 3.3V SRAM cells without marking layer V5_XTOR should follow below specific rules which is different from 3.3V/(5V)6V rules.

Table 49: 3.3V SRAM RULES

RULE NO.	DESCRIPTION	LAYOUT RULE (3.3V)
S.DF.4c_]	Min. (Nwell overlap of PCOMP) outside DNWELL	0.4
S.DF.16_	Min. space from (Nwell outside DNWELL) to (NCOMP outside Nwell and DNWELL).	0.4
S.CO.3_I	Poly2 overlap of contact	0.04
S.CO.4_I	COMP overlap of contact	0.03
S.CO.6_ii	If Metal1 overlaps contact by < 0.04μm on one side, adjacent metal1 edges Overlap	0.02
S.M1.1_I	Width	0.22

4.1.12 12.0 Scribe Line & Guard Ring Rules And Guidelines

12.1 Scribe Lines

A continuous scribe line and scribe line guard ring is required on a11 sides of a chip that is intended for dicing and packaging. It is recommended that test patterns should have scribe line guard ring. The dimensions stated in this section are minimum. The dimensions of a shrunk circuit after shrink should comply with these rules. Refer to the Reticle specifications for the minimum horizontal and vertical widths.

12.2 Six Metal Scribe Line Guard Ring Structure

The contact and via rings should consist of the minimum size contacts/vias placed in staggered formation with separation of 0.7µm within each of the rings defined by the coordinates in the table below. X=0 defines the inner (die-side) edge of the guard ring structure. The guardring structure has been divided into two groups based the packaging process difference. The guard ring in the product uses solders bumping flip-chip need to be protected from chemical attack during solder bumping process.

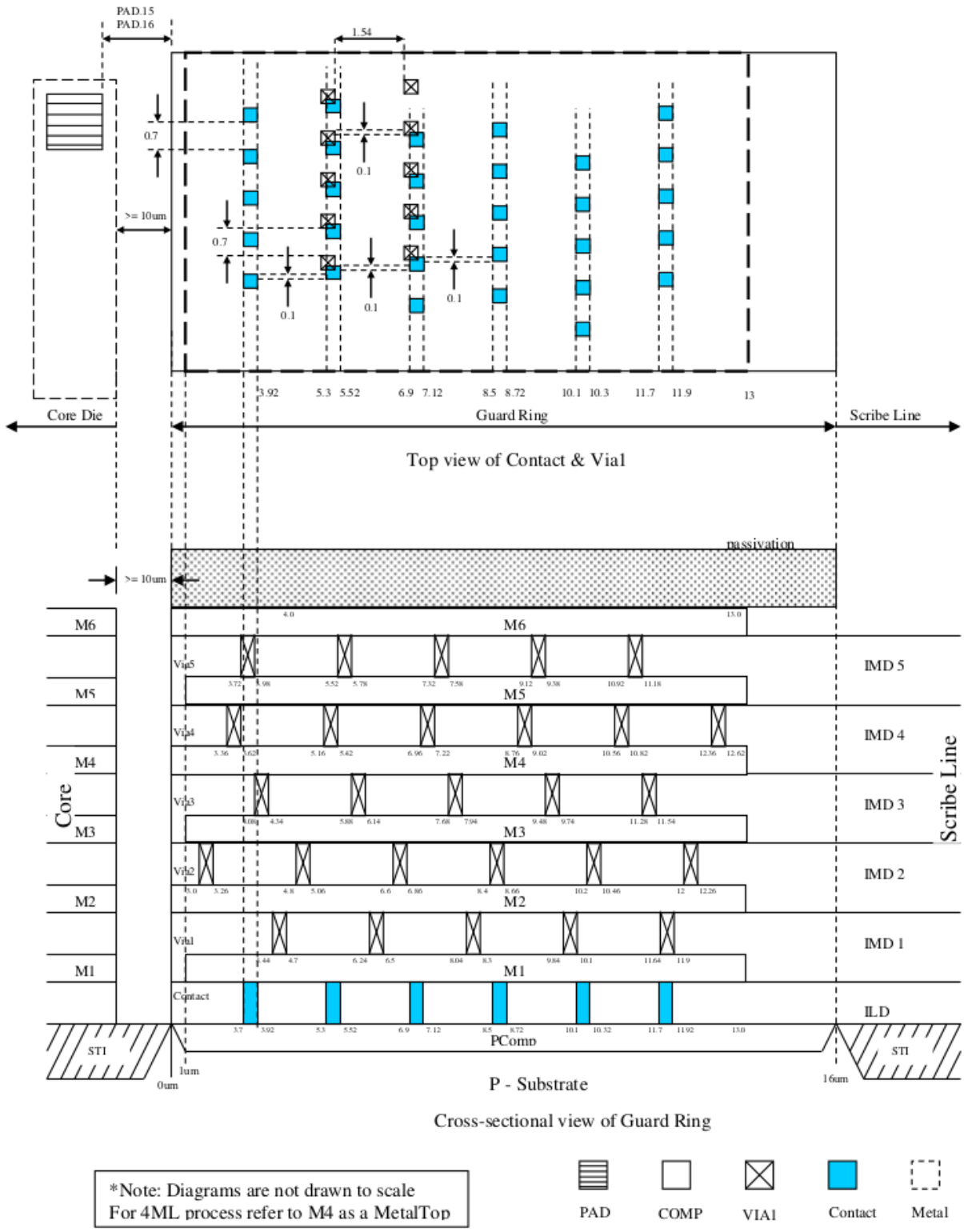

This diagram is a schematic describing scribe line guard ring layer for COMP, CONT, Via1 & Metal only. For detailed scribe line guard ring layout, please refer to following table.

Ring	Starting Coordinate	Ending Coordinate	Size (μm)
PCOMP	0	16	16
GUARD_R ING_MK	0	16	16
AD	0	16	16
Contact	3.7	3.92	0.22
Contact	5.3	5.52	0.22
Contact	6.9	7.12	0.22
Contact	8.5	8.72	0.22
Contact	10.1	10.32	0.22
Contact	11.7	11.92	0.22
Metal1	1	13	12
Via1	4.44	4.7	0.26
Via1	6.24	6.5	0.26
Via1	8.04	8.3	0.26
Via1	9.84	10.1	0.26
Via1	11.64	11.9	0.26
Metal2	0	13	13
Via2	3	3.26	0.26
Via2	4.8	5.06	0.26
Via2	6.6	6.86	0.26
Via2	8.4	8.66	0.26
Via2	10.2	10.46	0.26
Via2	12	12.26	0.26
Metal3	1	13	12
Via3	4.08	4.34	0.26
Via3	5.88	6.14	0.26
Via3	7.68	7.94	0.26
Via3	9.48	9.74	0.26
Via3	11.28	11.54	0.26
Metal4	0	13	13
Via4	3.36	3.62	0.26
Via4	5.16	5.42	0.26
Via4	6.96	7.22	0.26
Via4	8.76	9.02	0.26
Via4	10.56	10.82	0.26
Via4	12.36	12.62	0.26
Metal5	1	13	12
Via5	3.72	3.98	0.26
Via5	5.52	5.78	0.26
Via5	7.32	7.58	0.26
Via5	9.12	9.38	0.26
Via5	10.92	11.18	0.26
MetalTop	0	13	13

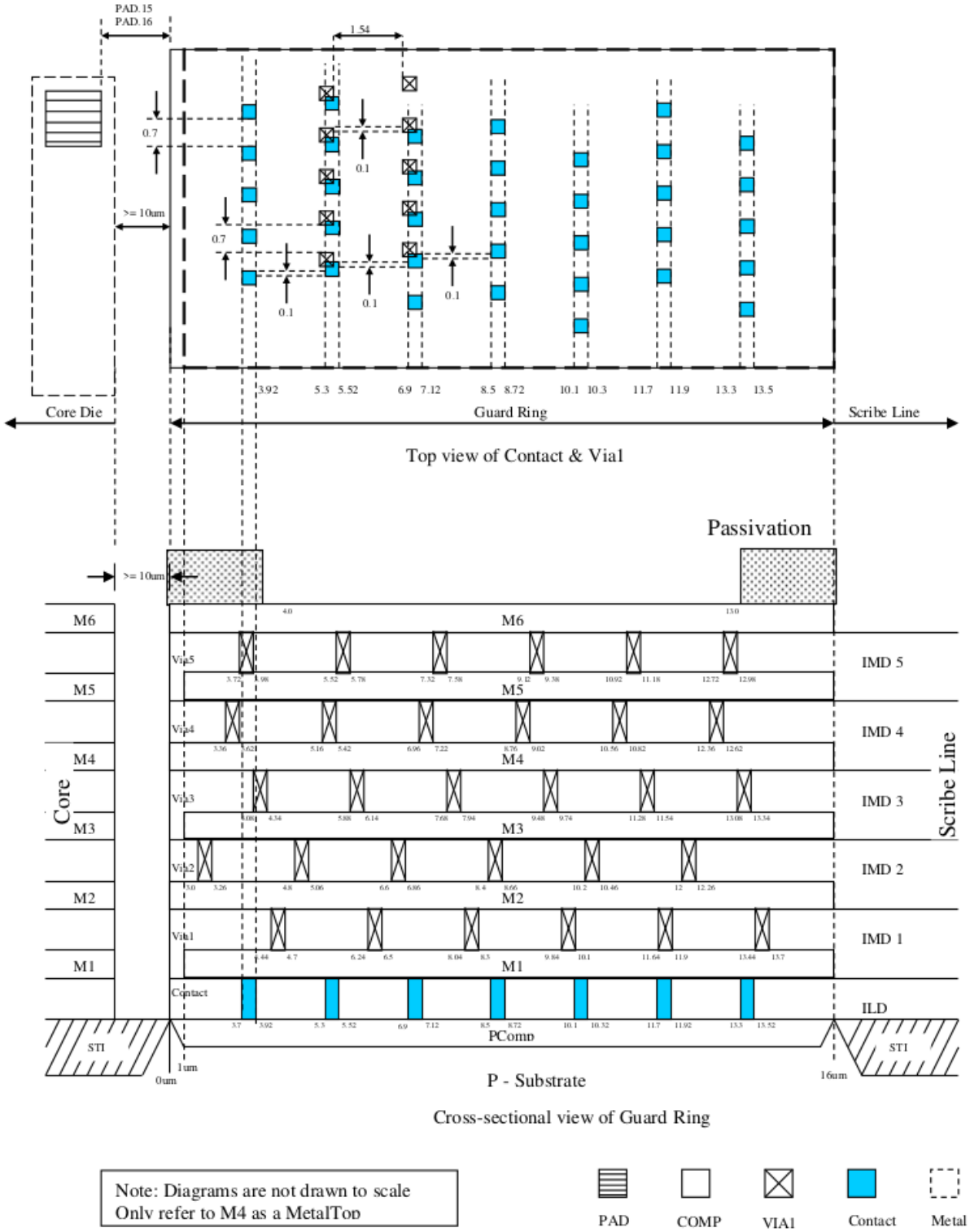

This diagram is a schematic describing scribe line guard ring layer for COMP, CONT, Via1 & Metal only. For detailed scribe line guard ring layout, please refer to following table.

Ring	Starting Coordinate	Ending Coordinate	Size (μm)
PCOMP	0	16	16
GUARD_RING_MK	0	16	16
AD	0	16	16
Contact	3.7	3.92	0.22
Contact	5.3	5.52	0.22
Contact	6.9	7.12	0.22
Contact	8.5	8.72	0.22
Contact	10.1	10.32	0.22
Contact	11.7	11.92	0.22
Contact	13.3	13.52	0.22
Metal1	1	16	15
Via1	4.44	4.7	0.26
Via1	6.24	6.5	0.26
Via1	8.04	8.3	0.26
Via1	9.84	10.1	0.26
Via1	11.64	11.9	0.26
Via1	13.44	13.7	0.26
Metal2	0	16	16
Via2	3	3.26	0.26
Via2	4.8	5.06	0.26
Via2	6.6	6.86	0.26
Via2	8.4	8.66	0.26
Via2	10.2	10.46	0.26
Via2	12	12.26	0.26
Metal3	1	16	15
Via3	4.08	4.34	0.26
Via3	5.88	6.14	0.26
Via3	7.68	7.94	0.26
Via3	9.48	9.74	0.26
Via3	11.28	11.54	0.26
Via3	13.08	13.34	0.26
Metal4	0	16	16
Via4	3.36	3.62	0.26
Via4	5.16	5.42	0.26
Via4	6.96	7.22	0.26
Via4	8.76	9.02	0.26
Via4	10.56	10.82	0.26
Via4	12.36	12.62	0.26
Metal5	1	16	15
Via5	3.72	3.98	0.26
Via5	5.52	5.78	0.26
Via5	7.32	7.58	0.26
Via5	9.12	9.38	0.26
Via5	10.92	11.18	0.26
Via5	12.72	12.98	0.26
MetalTop	0	16	16
Pad	4	13	9

12.3 Placement and Electrical Connection of Guard Ring

12.3.1 Guard ring spacing to any other circuits

The minimum spacing from guard ring Metal1, 2, 3, 4, 5 to any other unrelated Nwell, COMP, Poly2, Metal1, 2, 3, 4, 5 is 10µm.

12.3.2 Guard ring and Vss bus

Scribe line guard ring and Metal1, 2, 3, 4,5 and/or 6 must be connected directly to Vss pad(s). The guard ring metal may be butted with the Vss bus. Then the width of the Metal1, 2, 3, 4, 5 Vss bus before merging with the guarding metal has to meet the current density requirements and the rest if the related Nwell, COMP, poly and metal should be at least 10µm away from the original guard ring.

12.3.3 Used with Down Bond Chip

If a scribe line guard ring is used to connect down bond chip to Vss pad, the shortest section of the guarding in between Vss pad and the down bond chip should guarantee minimum 30µm Metal1 and 25µm Metal2 width.

12.4 Guard Ring design rule check

Guard ring is to be covered by guard ring marking (GUARD_RING_MK) as stated below to facilitate the related design rule checking. Following rules shall be checked for the real ring area recognized by GUARD_RING_MK

Rule NO	Description	Solder Bump	Other Cases
GR.1	Min/Max GUARD_RING_MK overlap of guard ring comp	0	0
GR.2	Min GUARD_RING_MK space to prime die COMP, NWELL, Poly2, Metal 1, 2, 3, 4, 5 and metal Top	10	10
GR.3	Minimum Pplus overlap of PCOMP inside guard ring	0	0
GR.4	Minimum metal-n width (n= 1 to 6)	12	12
GR.5	Minimum metal-n (n=1 to 6) outer edge space to die edge (Identified by the outer edge of GUARD_RING_MK).	3	-
GR.6	Min PCOMP width	16	16
GR.7	Minimum Contact to Contact spacing	0.7	0.7
GR.8	Minimum via to via spacing	0.7	0.7
R.9 (1)*	All Metal & Vias shall exist in the seal ring area All Vias shall put in a staggered row	-	-
GR.10 (2)*	There must be rows of contact in the seal ring area	-	-
GR.11	Pad opening on top of GUARD_RING_MK layer	Not allowed	Required

Note:

1. Vias in staggered row is not checked by DRC deck
2. Rows of contact is not checked by DRC deck.

* *Appendix B: Rules not coded*

4.1.13 13.0 Dummy Fill Rules And Guidelines

This part of the document covers rules for dummy COMP, dummy Poly2 and dummy metal. Dummy COMP is mandatory to put in the empty field area in order to control STI CMP dishing however dummy Poly2 and dummy metals requirement is based on the total pattern density.

Input Layers Required for Dummy generation

The layers required to generate the dummy COMP is COMP, POLY2, Nwell, LVPWEL, Dualgate. Use "NDMY" mark layer to exclude dummy COMP generation in any area if needed (to exclude dummy COMP in that area).

a. Use the "RES_MK" layer in all resistors to avoid generation of dummy COMP in those areas. It is necessary to avoid dummy COMP generation underneath all well and poly2 resistors. Hence RES_MK layer is necessary for all resistors. Use IND_MK layer in inductors (applicable for RF processes only)

b. The layers required to generate dummy Poly2 includes COMP, POLY2, Nwell, Metal1, Metal2 and PMNDMY for dummy Poly2 exclusion.

c. Use "PMNDMY" layer for excluding any dummy Poly2 generation in any area if needed (to exclude dummy Poly2 generation in that area).

d. The layers required to generate dummy metal are: metal layers, MIM, Poly fuse and Metal fuse, Poly2 and PMNDMY.

e. Use "PMNDMY" layer for excluding any dummy metal generation in any area if needed (to exclude dummy metal generation in that area).

The hierarchical database is to be sent to the CAD group in GlobalFoundries for dummy generation if dummies are to be generated by GlobalFoundries.

13.1 Design rules for Dummy COMP creation.

Dummy COMP rules are required to enable planarization process for shallow trench isolation. Non-functional dummy COMP features are added in large open areas without active features. They are necessary around an isolated active device to minimize STI elevation difference in isolated and dense areas.

It is to be noted that "dummy COMP" shall be drawn in certain systematic way, however dummy features and spacing being much bigger than the lithography and etch capability, the rules are categorized in two category, one for the way of drawing and the other for the DRC (Design rule check) purpose. So, for DRC deck will have only rules marked as "for DRC check" as indicated in last column below. The rules indicated as "for DRC" would imply that they shall be taken care during drawing as well as checked the DRC there after.

Table 52: Dummy COMP rules

RULE NO.	DESCRIPTION	LAYOUT RULE	For Drawing OR DRC Check
Layer	DCF-Dummy COMP Fill		
	Use “NDMY” mark layer to exclude dummy COMP generation in certain critical High frequency/RF circuit areas.	–	–
DCF.1a	All area between active polygons (COMP) (with spacing greater than equal to this rule) must be filled with “Dummy COMP” except area marked by NDMY, RES_MK, Pad and IND_MK, as well as the Region define by DCF.6a, 6b, 6c, 6d, 6e. Use rules DCF.1c to DCF.13 to drawn “Dummy COMP”	20	For DRC
DCF.1b	Minimum global density for active layers (COMP+ Dummy COMP) Local density is governed by DCF.1a , DE.3 and DE.4	25%	For DRC
DCF.1c	A staggered array of dummy COMP 5 umX5 um squares is created to cover the prime die (1), frame, SLM Etest patterns and SLM reliability test patterns.	5X5	DRC check for
DCF.1d	Maximum global density for active layers (COMP+ Dummy COMP)	70%	For DRC
DCF.2a*	Min/Max Adjacent placement Space between dummy COMP cells	3	For Drawing
DCF.2b	Resulted minimum space between Dummy active in all directions (for DRC check)	1.9	For DRC
DCF.3*	Stagger both X and Y direction	1.6	For Drawing
DCF.4	Space from dummy COMP to COMP (circuit COMP).	3.5	For DRC
DCF.5	Space from dummy COMP to poly2	1.5	For DRC
DCF.6a	Space from dummy COMP to Nwell boundary	1.3	For DRC
DCF.6b	Space from dummy COMP to DNWELL boundary	4	For DRC
DCF.6c	Space from dummy COMP to LVPWELL boundary	1.3	For DRC
DCF.6d	Space from dummy COMP to Dualgate boundary	1.3	For DRC
DCF.7a*	Space from dummy COMP in prime die including guard ring to the scribe line	26	For DRC
DCF.7b*	Space from dummy COMP in frame to edge of frame (valid only for scribe lines)	6	For DRC
DCF.7c*	Space from dummy COMP in frame to any frame cell except non-ET (valid only for scribe line structures)	10	For Drawing
DCF.7d*	Space from dummy COMP in SLM Etest patterns or SLM reliability test patterns to the boundary of test patterns (valid only for scribe line Structures)	6	For DRC
DCF.8a	Space from dummy COMP to Resistor marking layer (RES_MK). Dummy COMP should not exit under RES_MK	3.5	For DRC
DCF.8b	There must be at least one row of dummy COMP (or substrate tie) between RES_MK layer and the transistor channel active if RES_MK layer’s both side (x and y) dimensions are greater than:	80	For DRC
DCF.9*	Space from dummy COMP to Pad	7	Guideline only,no

Note:

1. The prime die, frame, SLM Etest patterns and SLM reliability test patterns will have the same dummy COMP generation algorithm.
2. Use dummy COMP exclude layer for all non-ET patterns in the frame

* *Appendix B: Rules not coded*

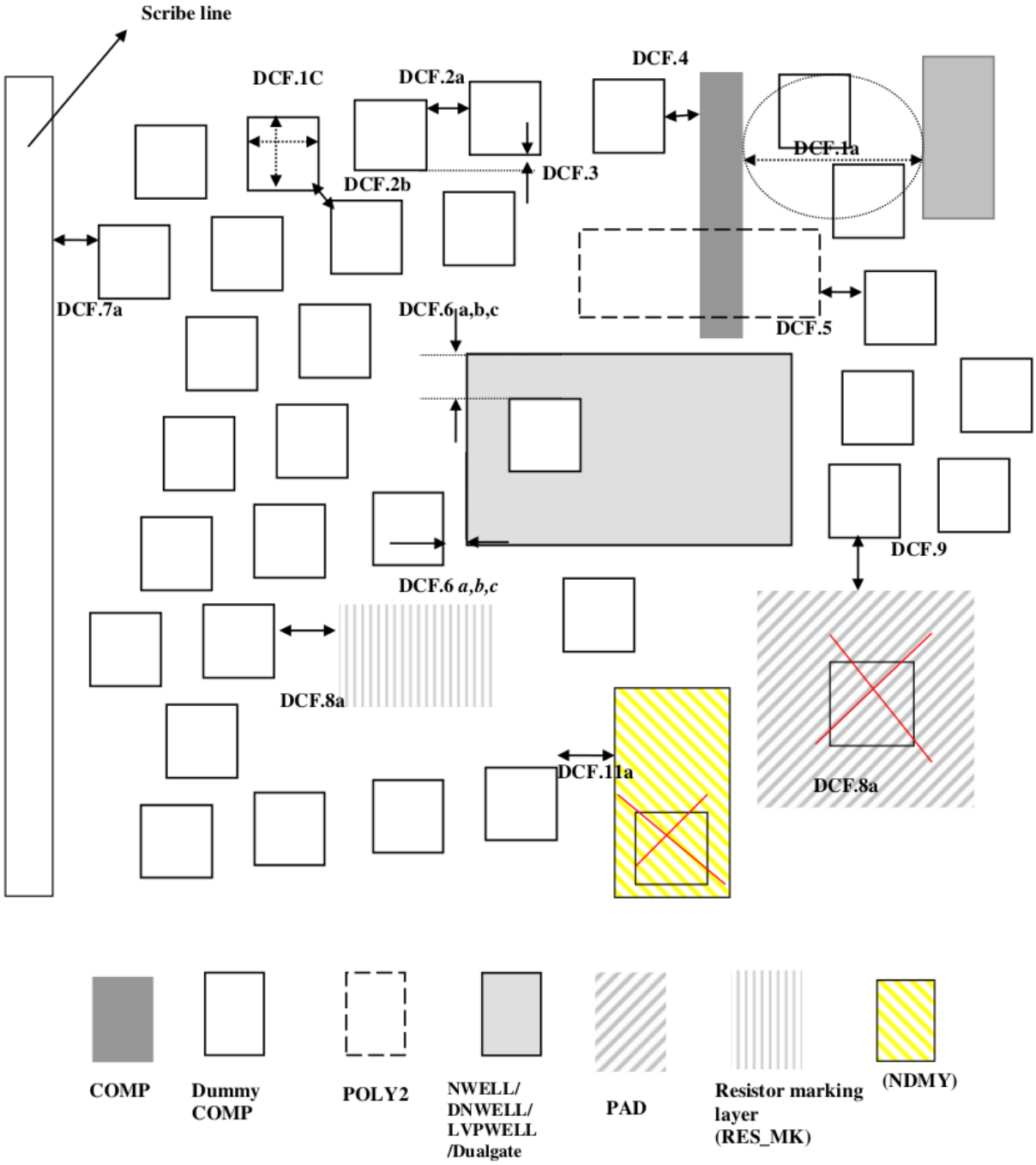

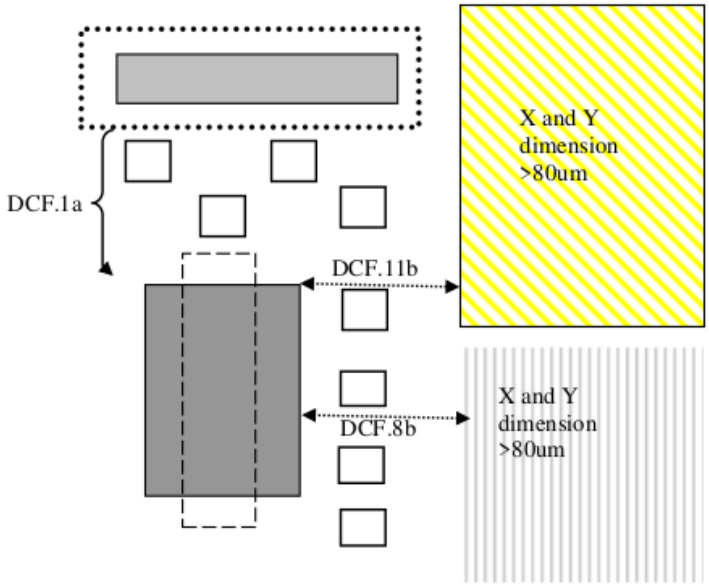
X and Y
dimension
>80um
DCF.1a
DCF.11b
X and Y
dimension
>80um
DCF.8b

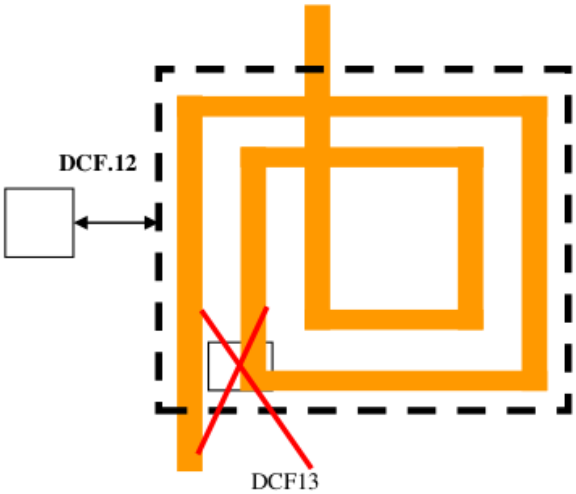
DCF.12
DCF13

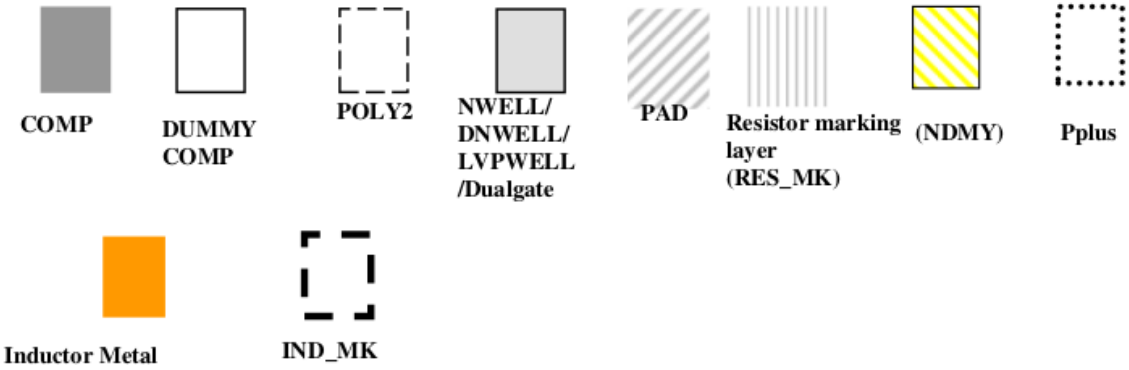
COMP
DUMMY
COMP
POLY2
NWELL/
DNWELL/
LVPWELL
/Dualgate
PAD
Resistor marking
layer
(RES_MK)
(NDMY)
Pplus
Inductor Metal
IND_MK

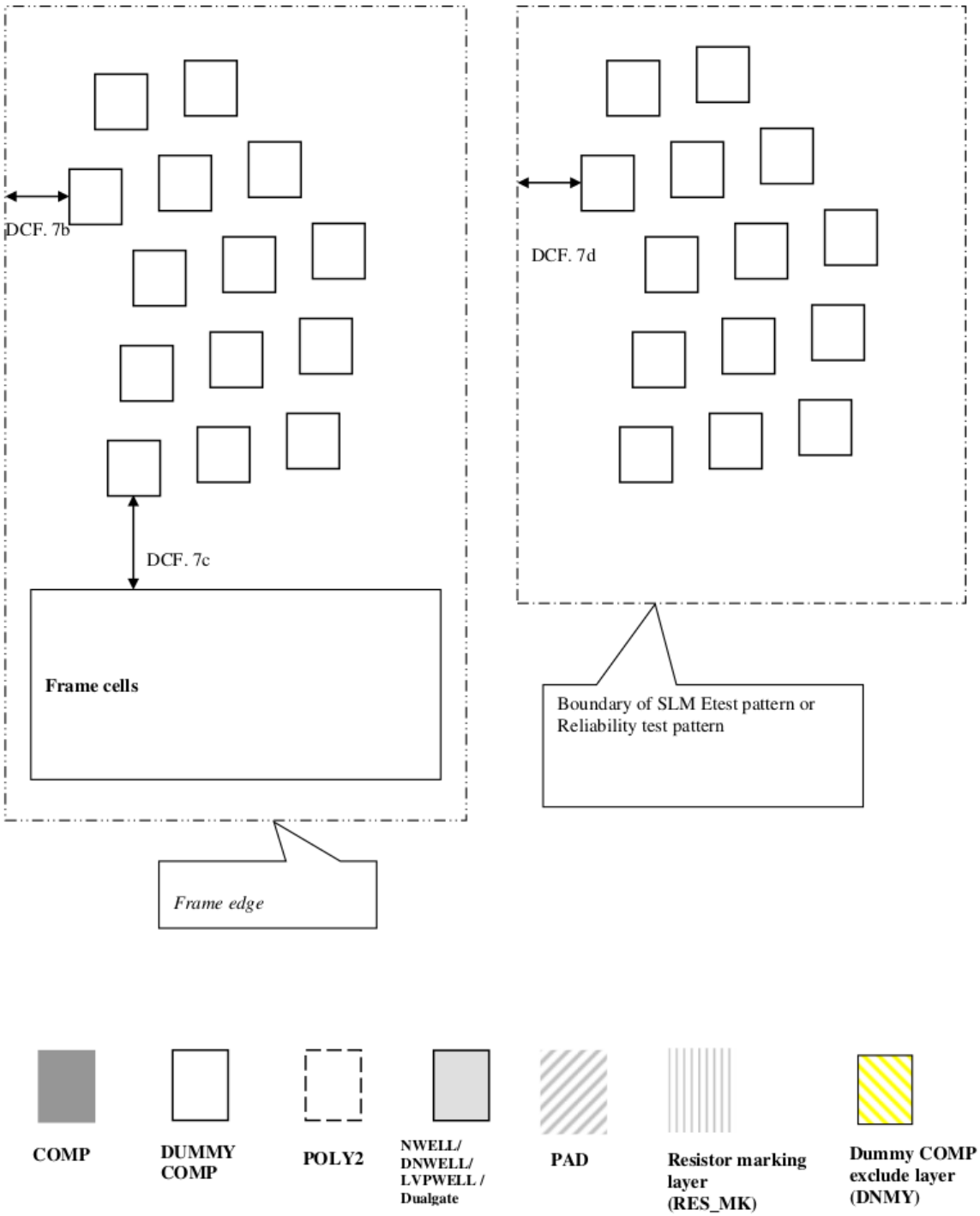
DCF. 7b
DCF. 7c
Frame cells
Frame edge
DCF. 7d
Boundary of SLM Etest pattern or
Reliability test pattern
COMP
DUMMY COMP
POLY2
NWELL/ DNWELL/ LVPWELL / Dualgate
PAD
Resistor marking layer (RES_MK)
Dummy COMP exclude layer (DNMY)

13.2 Design rules for Dummy Poly2 addition

Dummy Poly2 Generation is recommended to customer prime die, which does not meet GlobalFoundries Specification for minimum poly2 GDS density (stated under Poly2 rules). Minimum poly2 density is required to ensure good process control of device channel length across chip. No dummy poly2 generation is required for prime die that meets poly2 density specification. Non-functional dummy poly2 features are added over dummy COMP feature with constrains described by the rules below.

This dummy poly2 generation shall be applied, if poly2 total pattern density is less than 14%. It shall be preferably placed at most empty space.

Table 53: Dummy Poly2 rules

RULE NO.	DESCRIPTION	LAYOUT RULE	For Drawing / For DRC
Layer	DPF – Dummy Poly2 Fill	•	•
	Use PMNDMY mark layer to exclude dummy Poly2 generation in Certain critical analog/RF areas.	•	•
DPF.1	Dummy Poly2 is generated on top of dummy COMP by sizing up the Dummy COMP by 0.3um per side. The size of the dummy poly2 is 5.6 umX 5.6um square, and generated in prime die (1).		For Drawing
DPF.2a*	Space between dummy poly2 (for drawing algorithm).	2.4	For Drawing
DPF.2b	Resulted minimum space between Dummy poly in all directions (for DRC check)	1.1	For DRC Check
DPF.3*	Stagger both X and Y direction	1.6	For Drawing
DPF.4	Space of dummy poly2 to COMP	3.2	For DRC
DPF.5	Space of dummy poly2 to poly2	5	For DRC
DPF.6a	Space of dummy poly2 to Nwell boundary	1	For DRC
DPF.6b	Space of dummy poly2 to DNWELL boundary	2	For DRC
DPF.6c	Space of dummy poly2 to LVPWELL boundary	1	For DRC
DPF.6d	Space of dummy poly2 to Dualgate boundary	1	For DRC
DPF.7*	Space from dummy poly2 in prime die to scribe line	25.7	For DRC
DPF.8	Space from dummy poly2 to Resistor marking layer (RES_MK).	19.7	For DRC
DPF.9	Space of dummy poly2 to Pad	6.7	For DRC
DPF.10*	Remove truncated dummy squares		For DRC
DPF.11	Space to dummy COMP exclude layer	29.7	For DRC
DPF.12	Space of dummy poly2 fill to active circuit metal1 (2)	2	For DRC
DPF.13	Space of dummy poly2 fill to active circuit metal2 (2)	2	For DRC
DPF.14	Minimum dummy poly2 space to IND_MK layer	3	For DRC
DPF.15	Dummy poly2 should not exist under IND_MK layer		For DRC
DPF.16	Minimum dummy poly2 space to MTPMARK layer	3	For DRC
DPF.17	Dummy poly2 should not exist under MTPMARK layer		For DRC
DPF.18	Dummy poly2 cannot exit under the marking layer "PMNDMY"		For DRC
DPF.19	Space from dummy poly2 to dummy poly2 excluding layer (PMNDMY) (2)	8	For DRC

Note:

1. Dummy Poly2 is only generated in the prime die.
2. DPF.12 and DPF.13 do not apply to dummy metal fill.

* *Appendix B: Rules not coded*

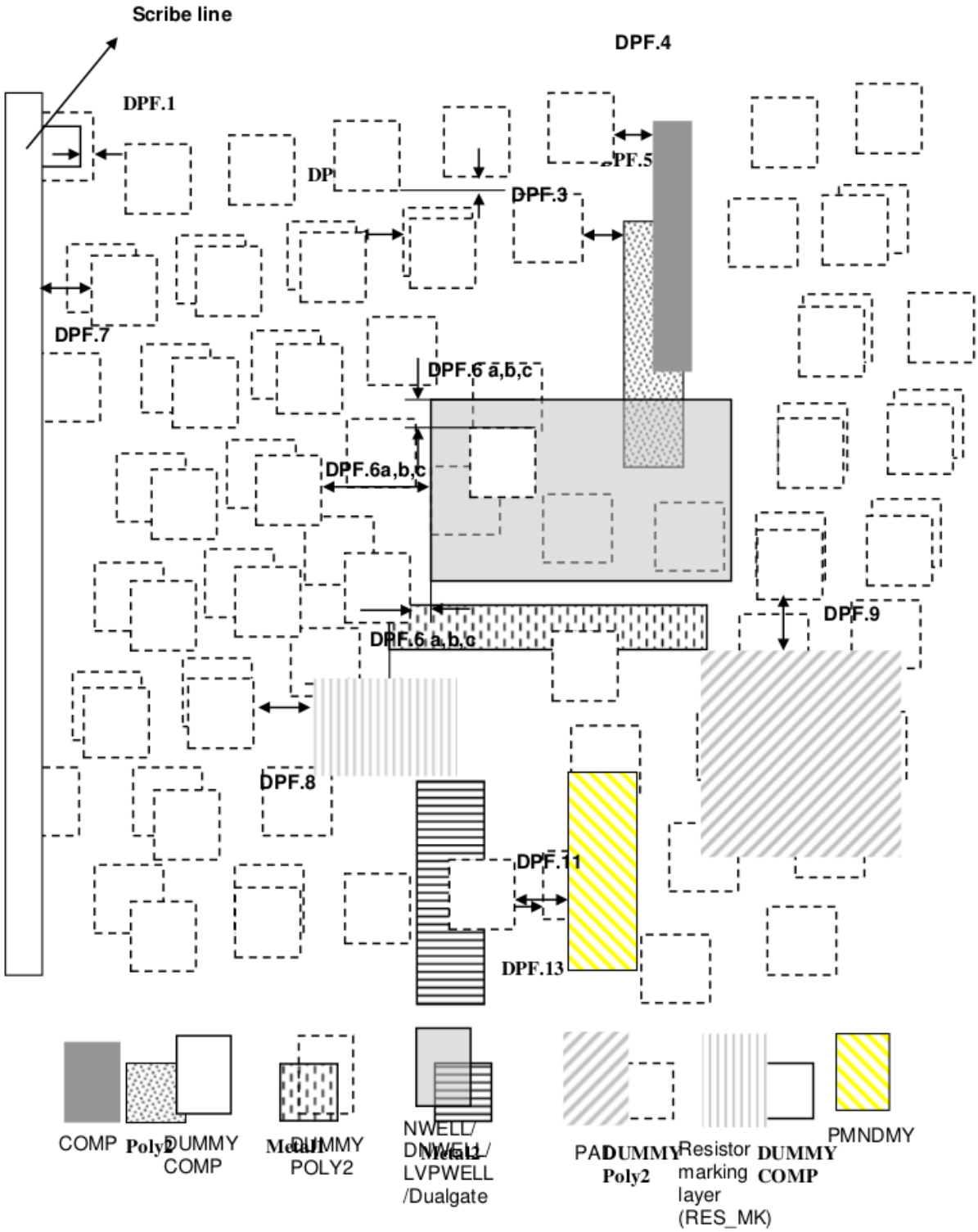
Scribe line
DPF.4
DPF.1
DPF.5
DPF.3
DPF.7
DPF.6 a,b,c
DPF.6a,b,c
DPF.6 a,b,c
DPF.9
DPF.8
DPF.11
DPF.13
COMP
Poly2
DUMMY COMP
Metal1
DUMMY POLY2
NWELL/ DNWELL/ LVPWELL /Dualgate
Metal2
PAD
DUMMY Poly2
Resistor marking layer (RES_MK)
DUMMY COMP
PMNDMY

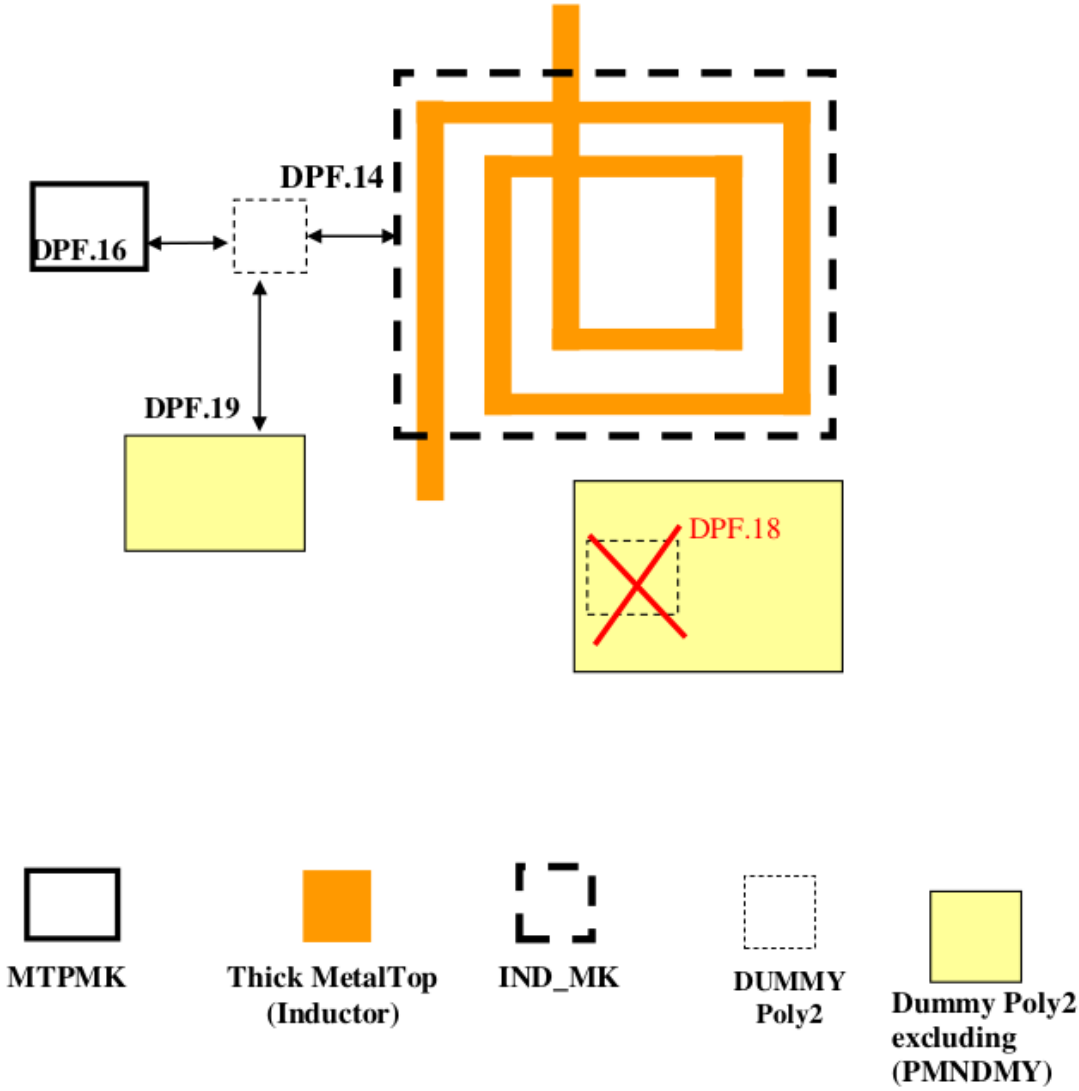

13.3 Design rules for Dummy Metal addition

For good metal etch process margin, a minimum metal density is recommended for Metaln and MetalTop. Device (circuit) layouts that does not meet minimum pattern density rule (stated in the metal design rules) shall be added in the dummy metal patterns. Dummy metals are added to improve the overall metal density so as to reduce the potential dishing issue due to CMP also.

Generation method:

1) Check the metal density in an area of 200um by 200um at a step of 100um.
2) Add dummy metal if total die metal density is less than 30%
3) Dummy metal size: 2.0um x 2.0 um; space is 1.2um
4) Please follow the following table when generating the Dummy metals:

Table 54: Dummy Metal rules

RULE NO.	DESCRIPTION	LAYOUT GUIDELINE
Layer	DMF – Dummy Metal Fill	
	Use PMNDMY mark layer to exclude dummy metal generation in certain critical analog/RF areas.	
DM.1	Min/Max Dummy metal line width/length	2.0 um
DM.2a*	Min Dummy metal line space (for Layout)	1.2 um
DM.2b	Min Dummy metal line space (for DRC)	0.98um
DM.2c	Min Dummy metal line space for thick top metal (3um Top metal)	2.0um
DM.3	Minimum space between dummy metal and circuit Metal line	2.0um
DM.4	Dummy Metal space to Subsequent Metal layer (E.g. Dummy M1 space to M2)	1um
DM.5	Dummy Metal space to Previous Metal layer (E.g. Dummy M2 space to M1; Dummy M1 space to Poly2)	1um
DM.6	No overlap of Dummy Metal with the Subsequent Metal layers	
DM.7	No overlap of Dummy Metal with the Previous layers	
DM.8	There should not be any dummy metal pattern fill in the following areas (i) MIM CAP area (recognized by Fuse Top) (ii) Poly fuse area (recognized by POLYFUSE) (iii) Metal fuse area (recognized by FUSEWINDOW_D) (iv) Dummy metal exclusion area (recognized by PMNDMY) (v) MTP mark area (recognized by MTPMK) (vi) OTP mark area (recognized by OTP_MK) Space from these Structures	6um
DM.9*	Do not use exact replicates of dummy metal fill patterns for consecutive metal layers to avoid dielectric and metal stress problems? E.g. the Metal4 dummy metal fill patterns should not be an exact copy of the Metal3 dummy fill pattern. (Offsets value:)	0.5um
DM.10*	Offset between the Dummy metal of the same layers	0.5um

Note: * *Appendix B: Rules not coded*

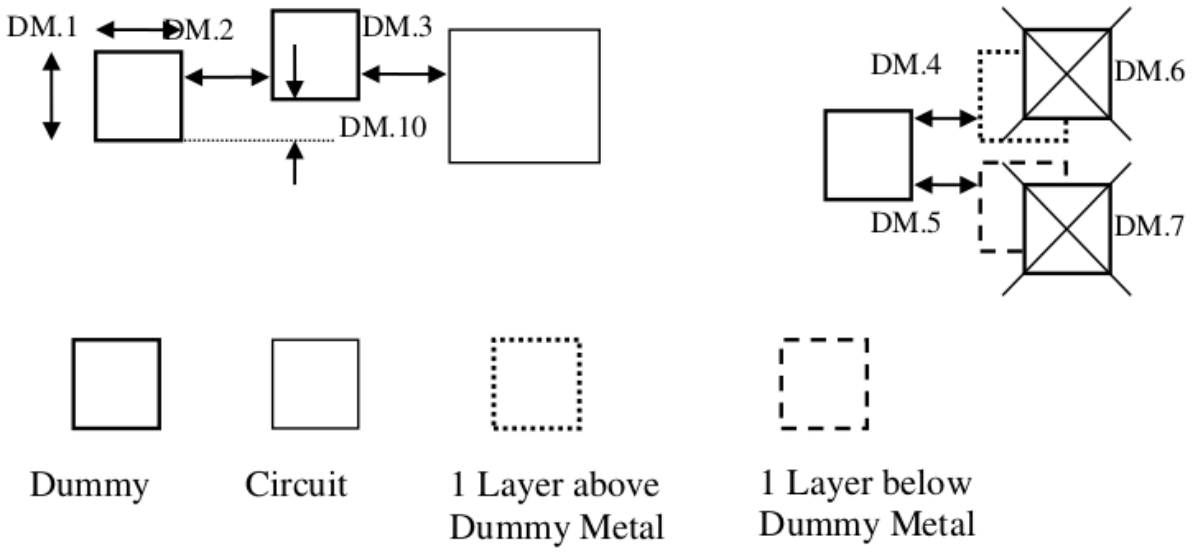

4.1.14 14.0 Reliability Related Rules And Guidelines

In this section some general guidelines (not all-inclusive) are provided to improve reliability in circuit design. Since reliability involves many aspects of circuit design, it is the responsibility of circuit designers to guarantee design conformance, reliability and manufacturability of their final product designs for intended applications.

14.1 Chip Operating Conditions

14.1.1 Temperature Limits

Circuit designers typically design their circuit for operation between -40 deg C to 125 deg C . For operation below 0 deg C, customer is requested to take note of HCI degradation effects by referring to the Reference Document R-QR-MI-008 APPLICATION NOTE: Guidelines for Circuit Design in GlobalFoundries 0.22/0.18 μm Baseline Process Technology to Guard Against Hot-Carrier-Induced Degradation.

14.1.2 Power Supply Voltage Limits

The power supply voltage must satisfy both the hot carrier constraints on the drain voltage as well as the gate-oxide integrity constraints on the gate voltage.

The nominal power supply voltage for this 0.18 μm HV process is 3.3V for LV and 5V/6V for HV devices with a supply overshoot tolerance of 10%. Since most of the reliability degradation mechanisms are strongly voltage dependent, it is important to control the power supply voltage so that it does not exceed Vddmax.

Similarly high voltage case drain and gate voltages shall not exceed more that 10% from the maximum operating voltages.

14.1.3 Chip Burn-in Limits

The maximum burn-in junction temperature shall be 150 deg C . The maximum burn-in voltage shall be 1.1*VDD. For LV devices VDD=3.3V and for HV devices VDD = 5V/6V (depending upon the process option selected).

14.1.4 Device Voltage Limits

14.1.4.1 Voltage Limits Due to Hot Carrier Induced FET Degradation

Hot carrier injection can cause current drive degradation in short channel length NMOS and PMOS transistors. This degradation rate is a function of the drain-to-source voltage and the fraction of time a FET conducts and generates hot carriers.

For a constant source/drain configuration, more current drive degradation takes place in the linear region. When source and drain are exchanged, as in a pass gate, the degradation is more severe and occurs in the saturation region as well.

The following guidelines will help to improve hot carrier reliability in circuit design. Power supply voltage must be controlled to within 10% over Vdd (Vddmax).

Hot carrier effect increases strongly with voltage. In case of multiple power supplies on same chip, special attention must be paid to FETs connected to higher power supply so that voltage across them does not exceed Vddmax for any significant amount of time.

a. Use minimum-channel FETs only when necessary. Hot carrier effect is more pronounced for FETs with shorter channel lengths. Linear region FET parameters (such as linear drive current, maximum Tran conductance) are more severely affected by hot carriers than saturation region FET parameters (such as saturation drive current) in forward mode of operation.

b. For applications where stability of linear region drive current or Tran conductance of an NMOSFET is critical and the very same NMOSFET is subjected to high drain-to-source voltage during circuit operation, longer than minimum channel FETs must be used.

c. Review circuits with high capacitive load (e.g. pads driving off-chip load), fan out (e.g. clock tree), slow input ramp, high duty cycles for voltages over Vddmax because such circuits may have NMOSFETs that are spending a significant fraction of time in the worst-case stress bias condition. In the event of high fanout (>10), speed-critical circuits should preferably be partitioned so that each driver has smaller number of fanouts.

d. Minimize switching time and current in the circuits. Digital circuits degrade primarily during switching. Turn off switching in parts of the circuit whenever possible.

e. Longer than minimum channel length should be used in circuits where NMOSFETs are used in bi-directional mode. Because degradation is confined near the drain end of the MOSFETs, reverse drain current shows more degradation than forward drain current.

14.1.4.2. Voltage Limits Due to Gate Oxide Breakdown

The maximum voltage, which can be applied across the gate oxide of a FET, is limited by oxide breakdown, which is strongly dependent on the gate oxide thickness. Maximum absolute value of DC voltage allowed between the gate and any other FET node (gate-node voltage) is 3.63V (for thin oxide), 6.5V/6V for 5V/6V process thick gate.

The gate-node voltage is allowed to periodically exceed the maximum DC values, where the maximum value of the over voltage depends on a duty cycle which is defined as the percentage of the time that the circuit is operating above the maximum allowed DC gate-node voltage. Maximum allowable duty cycle will depend upon TDDB lifetime at that duty cycle.

14.2 Electro-migration

The following rules are set with the aim to meet or exceed electro-migration life time of $T_{0.1}$ > 100K Hours at 85 deg C junction temperature for all metal layers, including via and contacts (both COMP & POLY2 contacts).

Definition of terms:

$T_{0.1}$ is defined as the time to 0.1% cumulative failures, under log-normal distribution

14.2.1 Current

Unidirectional current is defined as the steady value of direct current or the time average value of current always pulsed in the same direction.

Bi-directional current is defined as the value of the current when averaged over one direction with the higher peak current (Ip maximum). The lower peak in the opposite direction is neglected.

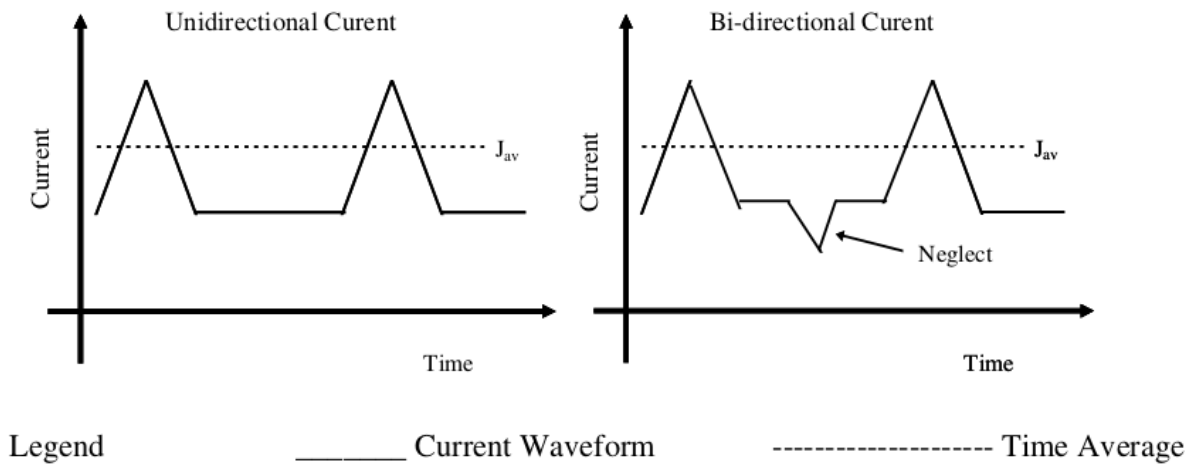

Table 55: Maximum Line Current Density per Drawn Width

Table 14.3Maximum Line Current Density per Drawn Width			
	Maximum Current Density (mA/um)		
	85 deg C	110 deg C	125 deg C
Metal 1-Top Metal - 1			
• Unidirectional (CB)	2.09	1	0.67
• Bi-directional (CB)	3.14	1.5	1
MetalTop (6kÅ thick)			
• Unidirectional (CB)	3.3	1.6	1.07
• Bi-directional (CB)	5.03	2.4	1.6
MetalTop (9kÅ thick)			
• Unidirectional (CB)	3.77	1.8	1.21
• Bi-directional (CB)	5.66	2.7	1.82
MetalTop (11kÅ thick)			
• Unidirectional (CB)	4.5	2.2	1.5
• Bi-directional (CB)	7	3	2.2
MetalTop (30kÅ thick)			
• Unidirectional (CB)	16.52	8.01	5.37
• Bi-directional (CB)	24.78	12.02	8.06

Table 56: Maximum Line Current Density per Drawn Width

Table 14.4 Maximum Contact/Via Current			
	Current Per Contact (mA)		
	85 deg C	110 deg C	125 deg C
POLY2 Contact			
• Unidirectional	0.43	0.21	0.14
• Bi-directional	0.65	0.3	0.21
COMP Contact			
• Unidirectional	0.58	0.28	0.18
• Bi-directional	0.87	0.42	0.28
Via1/2/3/4/5 (Top via size = 0.26um)			
• Unidirectional	0.58	0.28	0.18
• Bi-directional	0.87	0.42	0.28

14.2.2 Temperature

The maximum allowable current densities at any other temperatures below 110 deg C with the same reliability can be determined using the following formula:

$$I = I_0[e^{Ea/k(1/T-1/T_0)}]^{1/n}$$

Where

- I = current density at absolute temperature T (K)
- I_0 = current density specified at 110 deg C
- T_0 = 110 deg C
- k = Boltzmann's Constant, 8.62x10-5 eV/K
- Ea= Activation Energy (an assumed value of 0.7eV, based on previous experience is used. Determination of actual Ea will be carried out).
- n = Current density exponent (an assumed value n=2 based on previous experience is used. Determination of actual n will be carried out).

14.3 Latch-up Rules and Guidelines

Latch-up is caused by triggering of parasitic bipolar inherent in the CMOS architecture. Latchup can be triggered by overshoot at the positive supply line, undershoot at the negative (ground) supply line or hot carrier induced current in the substrate. By following the layout rules given below, robust latch-up can be obtained for the process.

It is to be noted that core latch-up rules only addresses the latchup immunity from the internal substrate current generation of MOS devices under normal operation. If circuit situations are such that it expects certain device source/drain junctions to be forward biased under any circuit operation situations then those diffusions must be marked by the "Latchup_MK" layer with zero overlap to that diffusion and follow the I/O latchup rules.

14.3.1 Core Latch-up Rules and Guidelines

Critical design guidelines related to latch-up are N-well overlap of PCOMP, external NCOMP to Nwell spacing and Nwell to Psub tap distances.

Table 57: Latch-up Rules

RULE NO.	DESCRIPTION	LV	MV	Comment
LU.1	FOR LV and MV inside DNWELL This rule is to check Max. Nwell/DNWELL tap space to every point on the boundary of PCOMP inside Nwell/DNWELL. For within 50um from (the PCOMP inside NWELL or DNWELL), minimum LVPWELL to (PCOMP outside LVPWELL) space is defined as (x):			
	a) If x >= 2.0um, then max Nwell/DNWELL tap space to every Point on the boundary of PCOMP inside NWELL/DNWELL	50	15	Rule
	b) If x >= 1.0um and < 2um, then max Nwell/DNWELL tap space to every point on the boundary of PCOMP inside NWELL/DNWELL	30	15	Rule
	c) If x < 1.0um, then max Nwell/DNWELL tap space to every point on the boundary of PCOMP inside NWELL/DNWELL	15	15	Rule
LU.2	FOR LV and MV inside DNWELL This rule is to check Max. LVPWELL tap space to every point on the boundary of NCOMP inside LVPWELL. For within 50um from (the NCOMP inside LVPWELL), minimum LVPWELL to (PCOMP outside LVPWELL) space is defined as x:			
	a) If x >= 2.0um, then Max. LVPWELL tap space to every point on the boundary of NCOMP inside LVPWELL.	50	15	Rule
	b) If x >= 1.0um and < 2um, then Max. LVPWELL tap space to every point on the boundary of NCOMP inside LVPWELL.	30	15	Rule
	c) If x <1.0um, then Max. LVPWELL tap space to every point on the boundary of NCOMP inside LVPWELL.	15	15	Rule
LU.3	FOR LV and MV outside DNWELL This rule is to check Max. LVPWELL (Psub) tap outside DNWELL space to every point on the boundary of NCOMP outside NWELL/DNWELL. For within 50um from the (NCOMP in LVPWELL or Psub), Minimum NWELL to (NCOMP outside Nwell) space is defined as y.			
	a) If y >= 2.0um, then Max. LVPWELL (Psub) tap outside DNWELL space to every point on the boundary of NCOMP outside NWELL/DNWELL.	50	15	Rule
	b) If y >= 1.0um and < 2.0um, then Max. LVPWELL	30	15	Rule

Note: * *Appendix B: Rules not coded*

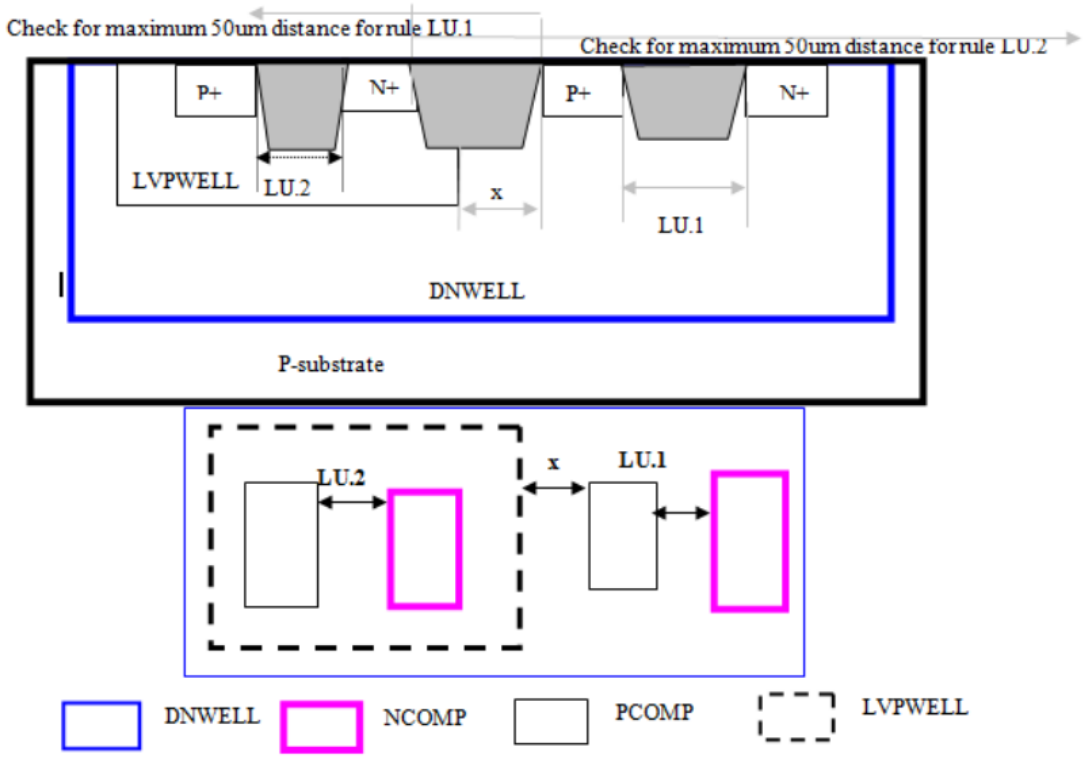

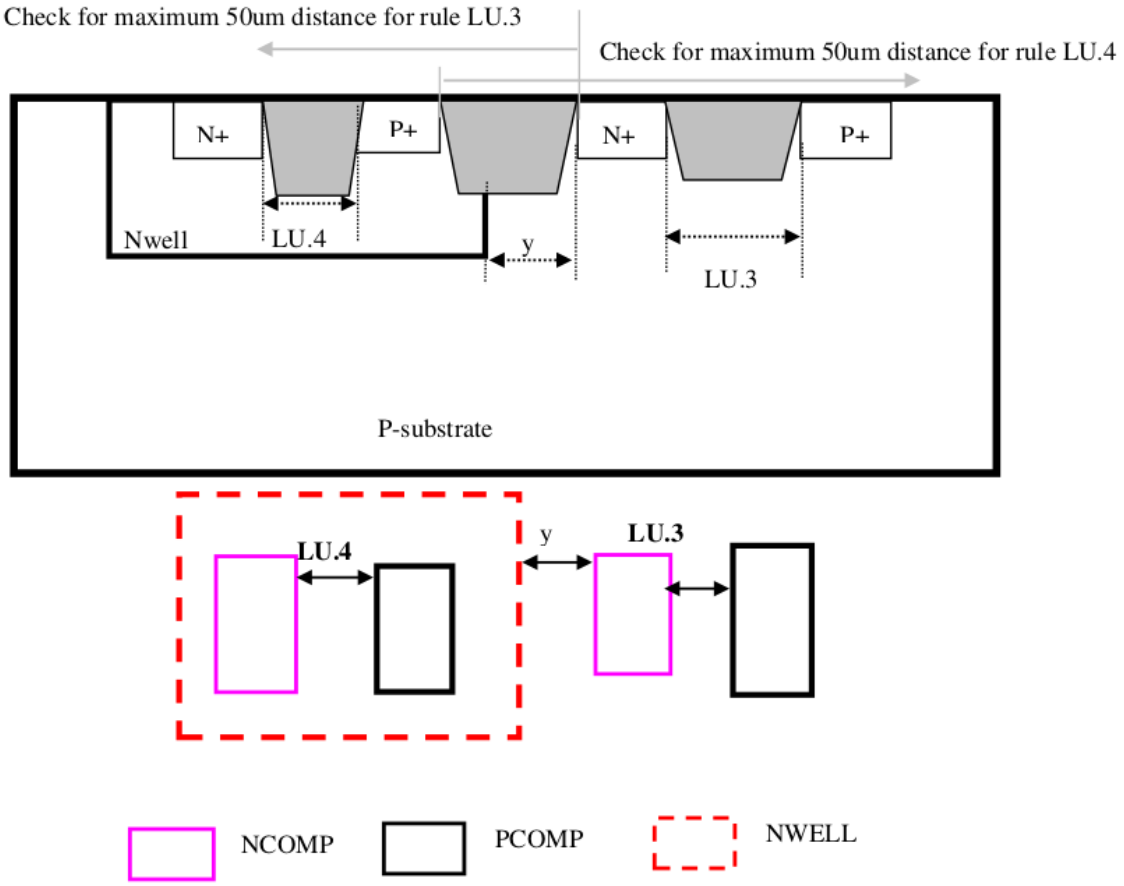

14.3.2 I/O Latch-up Related Rules and Guidelines

I/O regions are more susceptible to latch-up because of over voltage (P+ COMP potential exceeding Vdd) and under voltage (N+ COMP potential below Ground) conditions that may occur there. The most latch-up-prone areas are around the diffusions directly connected to a pad driving an off-chip load. The following design guidelines will help prevent latch-up in I/O area.

Use marking layer "Latchup_MK" coinciding with the boundary of the diffusion directly connected to the I/O pad and other diffusions which designer want to applied I/O rules for robust latchup immunity. Examples of such diffusions are:

(a) diodes that can be potentially forward biased, such as ESD diodes;

(b) Nodes that experience significant over voltage with respect to Vdd or under voltage with respect to Vss.

Those pads connected to well tap are considered as power source or ground, which will not be considered as I/O pad. This deck will also auto trace and check the I/O Latchup rule for those Non-well tap diffusion connected to the I/O pad.

Table 58: I/O Latch-up Related Rules

RULE NO.	DESCRIPTION	LV	MV	Comment
IO.0	To flag I/O latch-up related violation: i. Non well tap COMP directly connected to PAD is recommended to be marked by "Latchup_MK" layer.	•	•	Guidelines
	(b) Min/max Latchup_MK layer overlap of COMP (directly connected to Pad)	0	0	Guidelines
	FOR LV and MV			
IO.1	(a1) NCOMP in PSub directly connected to I/O pad must be surrounded by Psub tap inside the Psub without any PCOMP in NWELL in between (Exclude the case when each NMOS transistor have full width butting to well tap).			
	(a2) It should also be directly surrounded by an Nwell guard ring (Non broken NCOMP ring inside Nwelll). Nwell guard ring shall be connected to the most positive supply. Max space of Nwell guard ring to the NCOMP in Psub directly connected to I/O pad.	15	15	Rule
	(b) Within 15um from the edge of the NCOMP connected to I/O pad (marked by Latchup_MK): Max Nwell tap distance to PCOMP inside Nwell (irrespective of its direct connection to Pad)	2	2	Rule
IO.2	Minimum recommended Nwell guard ring width: (Maximize contact to guard uniformly. As a guideline, ratio of total contact area to the active area of the guard ring should be more than 5%).	2	2	Rule

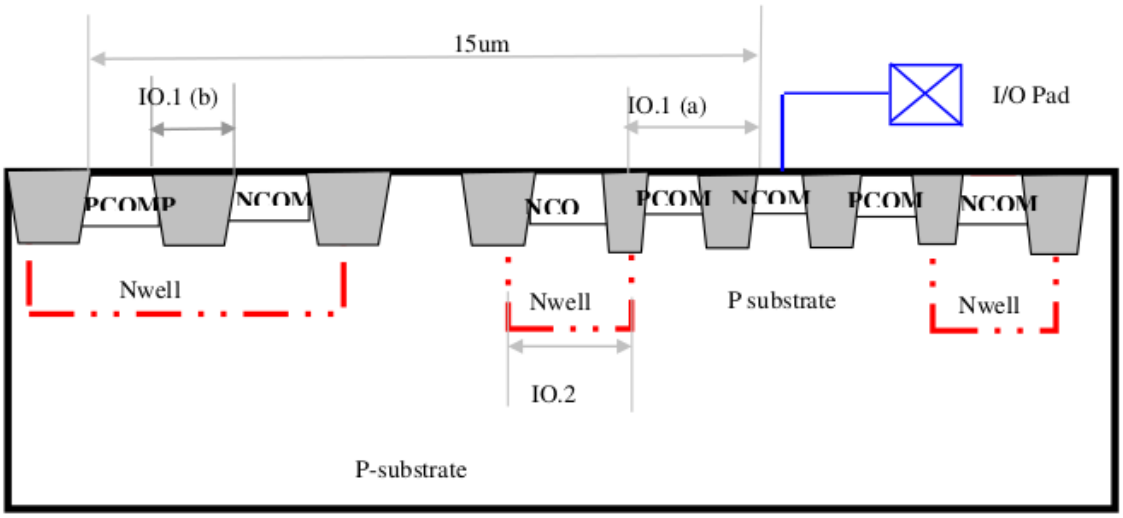
15um
IO.1 (b)
IO.1 (a)
I/O Pad
PCOMP
NCOM
NCO
PCOM
NCOM
PCOM
NCOM
Nwell
Nwell
P substrate
Nwell
IO.2
P-substrate

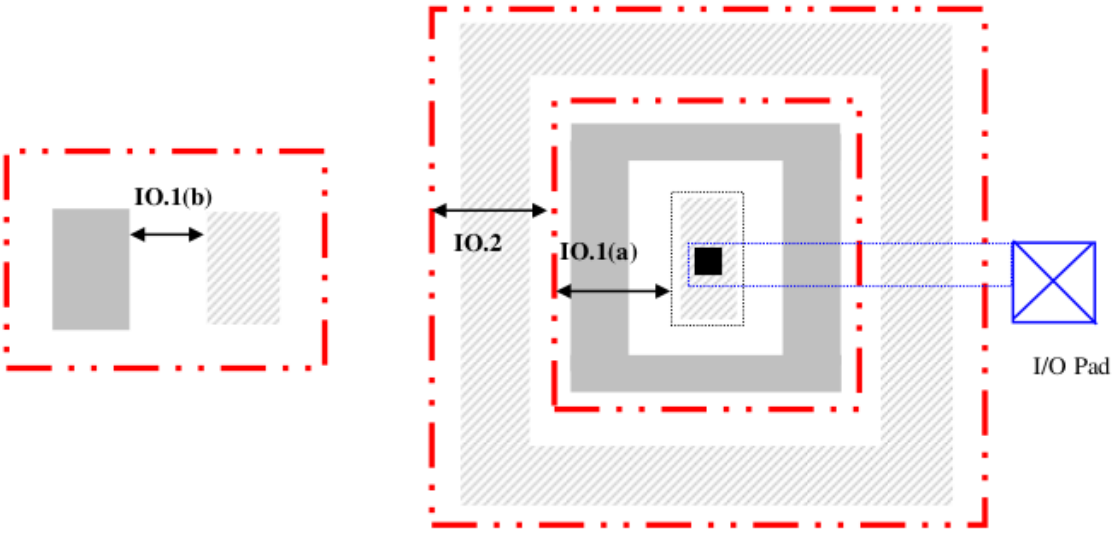
IO.1(b)
IO.2
IO.1(a)
I/O Pad

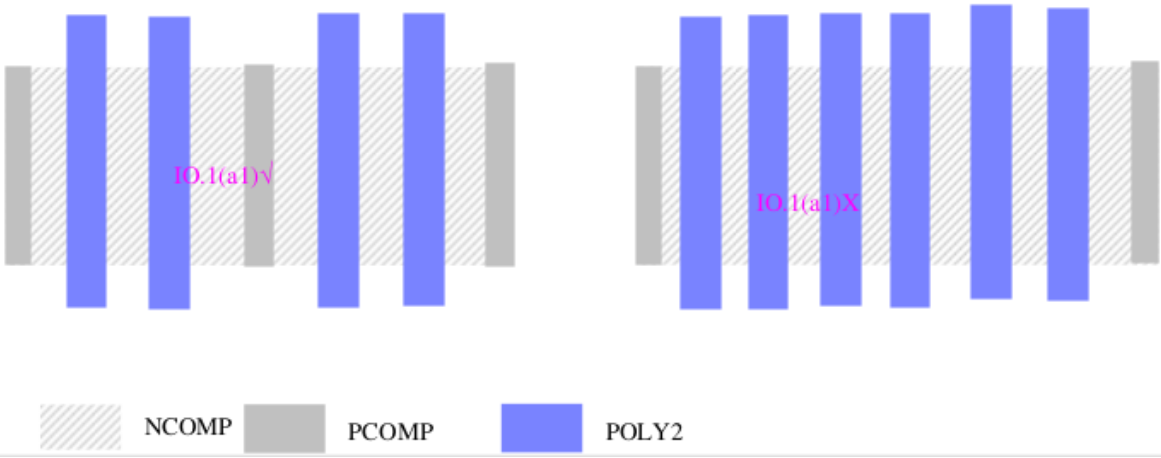
IO.1(a1)√
IO.1(a1)X
NCOMP
PCOMP
POLY2

RULE NO.	DESCRIPTION	LV	MV	Comment
	FOR LV and MV			
IO.3	a1) PCOMP in Nwell directly connected to I/O pad must be surrounded by Nwell tap inside the Nwell (Exclude the case when each PMOS transistor have full width butting to well tap).			
	a2) It should also be directly surrounded by PCOMP guard ring outside Nwell. PCOMP guard ring shall be connected to the lowest potential. Max space of guard ring PCOMP to the PCOMP in Nwell directly connected to the I/O pad.	15	15	Rule
	b) Within 10um from the edge of the PCOMP connected to I/O Pad (marked by Latchup_MK): Max P substrate tap distance to NCOMP outside Nwell (irrespective of its direct connection to Pad)	5	5	Rule
IO.4	Minimum recommended PCOMP guard ring width: (Maximize contact to guard uniformly. As a guideline, ratio of total contact area to the active area of the guard ring should be more than 5%).	2	2	Rule

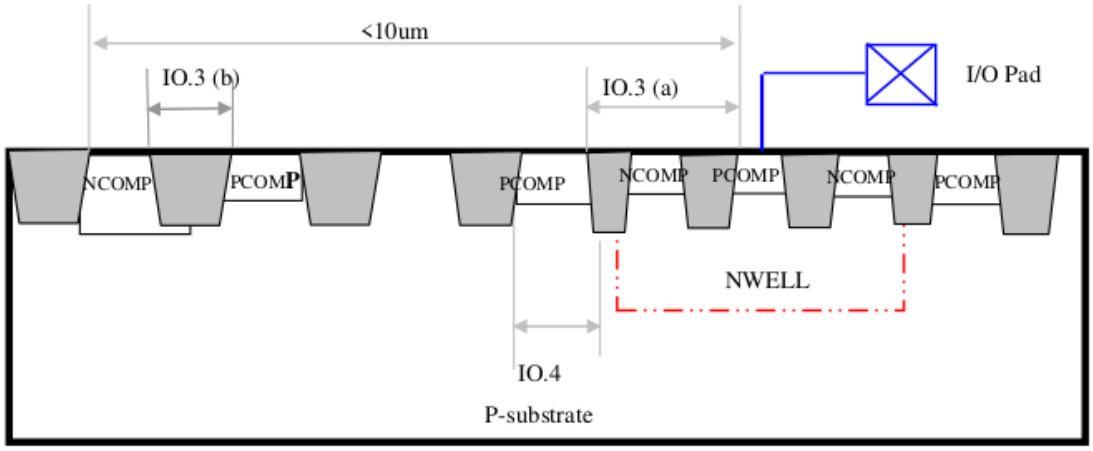
<10um
IO.3 (b)
IO.3 (a)
I/O Pad
NCOMP
PCOMP
PCOMP
NCOMP
PCOMP
NCOMP
PCOMP
NWELL
IO.4
P-substrate

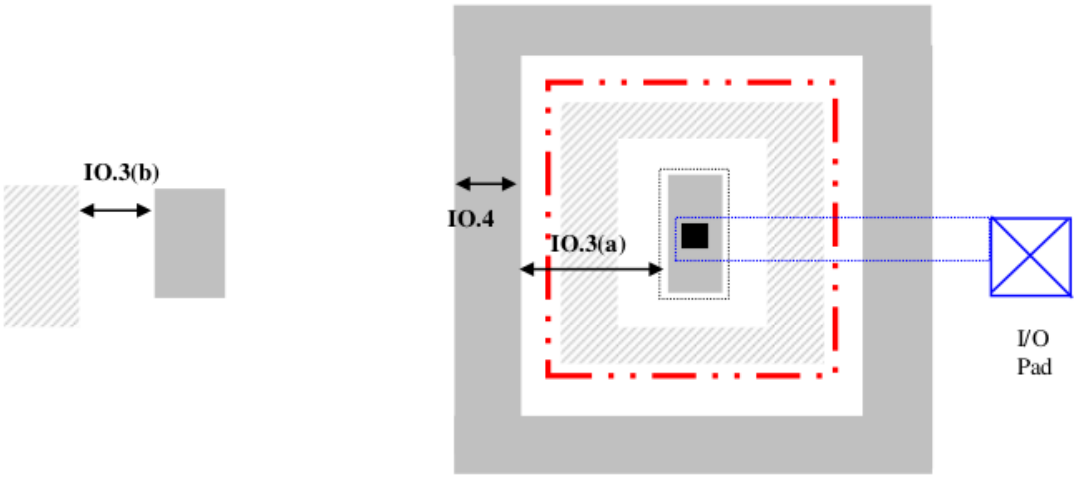
IO.3(b)
IO.4
IO.3(a)
I/O
Pad

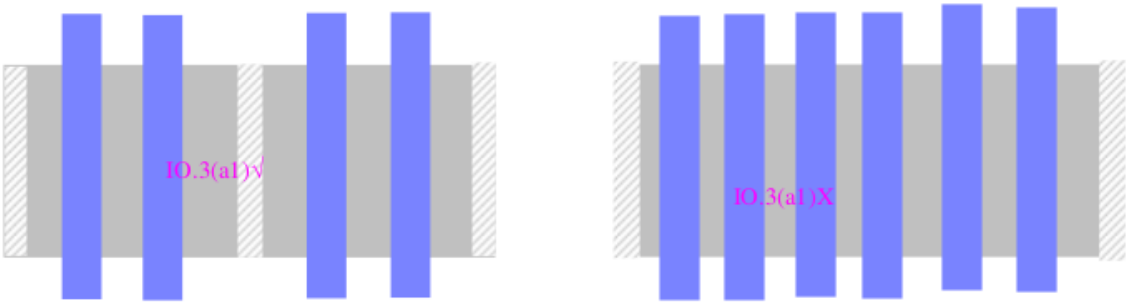
IO.3(a1)√
IO.3(a1)X

NCOMP
PCOMP
POLY2
NWELL
LVPWELL
Latchup_MK
Contact
Metal1

14.3.3 Special Cases in the circuit

An area for potential concern is forward-biased diode. Diode under dc forward bias should be avoided as a circuit component. In case such diode has to be used, it must be marked by Latchup_MK layer and it shall be surrounded by N+/Nwell guard rings and optionally by P+ guard rings. Such rules need to be followed if significant over voltage and under voltage conditions exist in any diffusion in the core.

Floating Nwell without any injecting diffusion is generally not a latch-up concern. Reliability Group will be available to assess possibility of latch-up in special circuit cases.

14.3.4 other better layout practices (guidelines) for latch-up prevention

High voltage circuits are highly sensitive for latch-up and hence attention shall be paid for how various high voltage devices are placed adjacent to each other. As much spacing and guard rings shall be put as possible depending upon space availability within that part of the circuit layout. Some of the guidelines to increase latch-up immunity are as below.

1. Place HVNMOS and HVPMOS as far apart as possible with double guard ring.
2. Place double guard ring (substrate tap connected to VSS and Nwell connected to VDD) between High Voltage and low voltage (or medium voltage) devices.
3. Use butted source and substrate contacts as much as possible. If because of required body bias reason they cannot be butted then keep minimum distance between source active region and the substrate-tap active regions.
4. Maximize the number of contacts and metal width in all guard rings.
5. Widen the widths of guard rings if found emptier space after the complete block layout.

14.4 ESD Layout Guidelines

The design and layout guidelines provided in this section are intended as a baseline guide for whole-chip ESD design and implementation. In order to achieve robust whole-chip ESD protection, all possible current paths, both intentional and parasitic paths, that is likely to conduct the ESD current during an ESD event must be evaluated at design phase.

It is important that the ESD current path provided by the ESD protection device is the lowest resistance path, away from the node being protected. Guard rings must be used around ESD device, and ESD devices should be placed as far as possible from the core.

This section describes high-current behavior of three types of ESD protection devices, grounded gate nMOS, grounded gate PMOS and diodes, implemented and characterized in 0.18 um 3.3V/(5V)6V process. Design rules are based on data taken from Transmission Line Pulse (TLP) technique which applies a series of increasing amplitude rectangular pulses of 100 ns width and 10 ns rise time, to the device under test.

Although there exist a common industry-wide acceptance of the TLP technique and the quasi-static device IV obtained from this technique, it is not un-common to see drastic deviations from the TLP based ESD robustness prediction and actual Human Body Model ESD qualification levels achieved. The deviation from waveform shape, and especially effects such as dV/dt, device turn-off during HBM decay time, etc., results in TLP to HBM miscorrelations.

Definition of Terms:

MOSFET device has a parasitic bipolar device (formed by drain/body/source terminals) that can be triggered during an ESD event. Characterization of this parasitic lateral bipolar is very important for evaluating the ESD robustness. Under ESD conditions, this parasitic bipolar is triggered when voltage across the MOSFET (Vds) reaches trigger voltage, **Vt1**.

At this point, MOSFET enters into a negative differential resistance region until the voltage reaches **Vsp**, commonly known as snapback holding voltage. There are two commonly used interpretation of the holding voltage:

Vsp-the actual measured lowest voltage at the lowest current level after the parasitic device turns-on (Vt1), see figure below.

Vh-the lowest possible voltage as determined by an extrapolation of the linear region of the device IV characteristics after the device is turned on, see figure below.

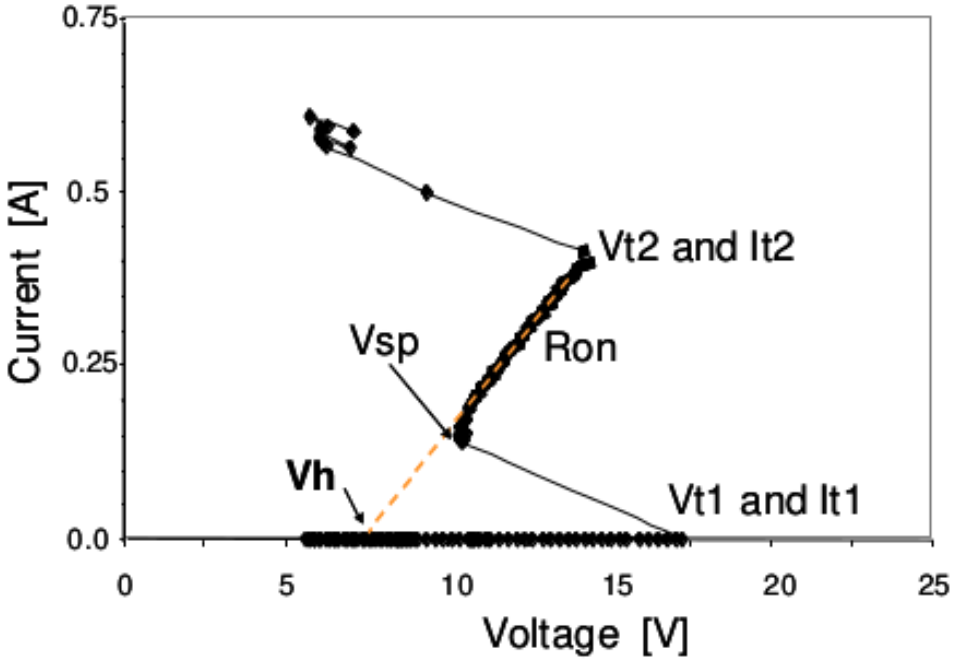

Definition of terms Vt1, Vsp, Vh, Vt2 and It2.

The key difference between these two definitions is that for devices turning-on at higher voltage, Vsp (as determined from the TLP IV curve) is likely to be overestimated due to the TLP tester load-line limitation.

Accurate determination of the lowest voltage across the device after the device is turned-on is critical to ensure that device do not enter latch-up conditions (assuming that current level at Vsp is less than latch-up current requirements).

Beyond Vh or Vsp, the parasitic bipolar is fully turned-on and voltage across transistor gradually increases as current is increased until at some voltage **Vt2** (known as second breakdown voltage) and current It2 (known as second breakdown current), MOSFET goes into thermal runaway and suffers permanent damage due to ESD event. The slope of the TLP IV curve beyond Vsp decreases with effective device width, while it increases with increasing silicide-blocking distance and un-optimized interconnect. To determine ESD performance, Vt1, Vsp, Vt2 and It2 are measured and Ron and Vh are extracted. It2 is, in general, a measurement of ESD robustness of transistor. However, equal importance should be give to Vt2, as this voltage will appear at the protected node, such that this voltage is always lower than the max allowed voltage at that node.

To survive the triggering of parasitic bipolar and stable conductance through parasitic bipolar, salicid block resistance is needed at least at the Drain junction. The option on how the salicided resistor embedded to the MOSFET can be done with different options. In this technology node, the supported salicidation options are as follows

- **Fully gate non-salicidation**

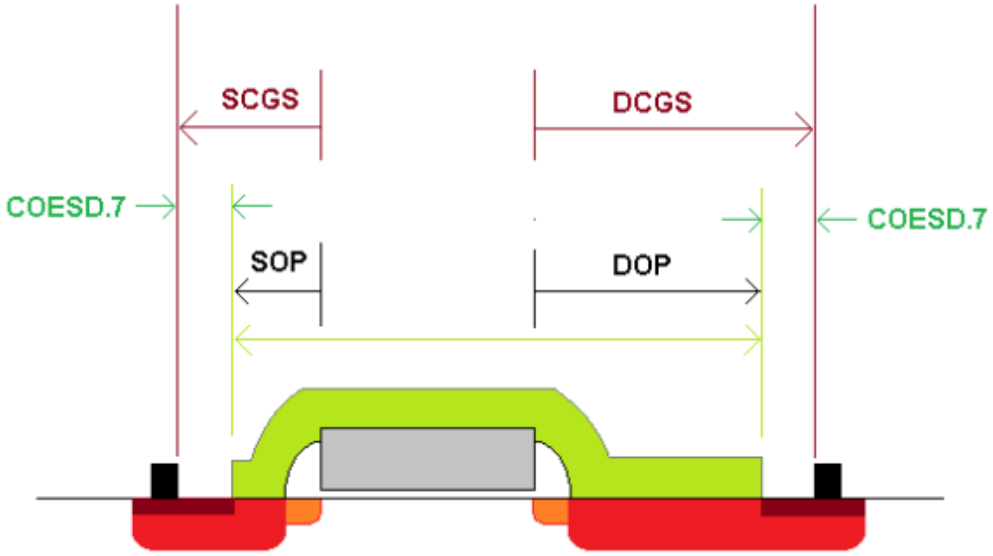

• **Partial gate salicidation**

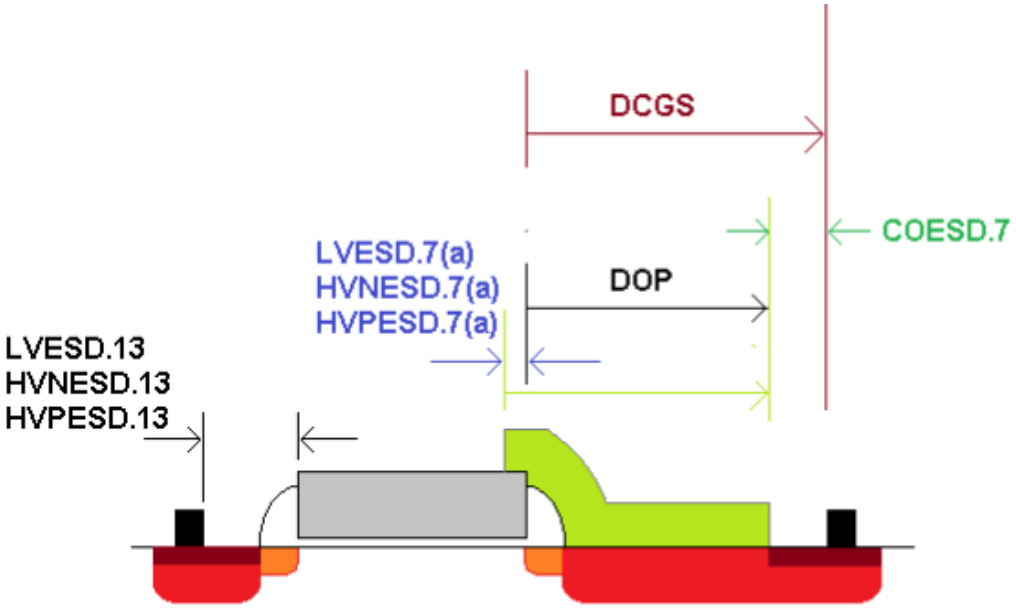

14.4.1 Design Guidelines for 3.3V LV SAB MOSFET Device

When using LV MOSFET (NMOS/PMOS) for ESD protection devices, it shall be marked by ESD_MK mark layer. The following layout guidelines are recommended.

Table 59: 3.3V LV SAB MOSFET Device Rules

RULE NO.	DESCRIPTION	RULE
LVESD.1	LV MOSFET used for ESD protection should be enclosured by ESD_MK, ESD_MK must enclose well pick-up implant	0
LVESD.2*	Poly Channel-length for each finger in multi-finger transistors must be same	
LVESD.3 (a)	Min. channel length for each finger (Recommended)	0.3
LVESD.3 (b)	Max. channel length for each finger	0.5
G.LVESD.4 (a)**	Recommended finger width for each finger	25
LVESD.4 (b)	Min. finger width for each finger	20
LVESD.4 (c)	Max. finger width for each finger	60
G.LVESD.5 (a)**	Recommended number of fingers share one pick-up ring in multi-finger transistors.	8
LVESD.5 (b)	Max. number of fingers share one pick-up ring in multi-finger Transistors	16
G.LVESD.6 (a)**	Recommended total finger width	200
LVESD.6 (b)	Min. total finger width	160
LVESD.6 (c)	Max. total finger width	720
LVESD.7	SAB should cover drain and source and overlap gate or cover drain only with rule LVESD.7(a) partly overlap poly gate	
LVESD.7 (a)	Min/max SAB overlap Poly gate	0.05
G.LVESD.8 (a)**	Recommeded at least one or nearest drain contact to gate edge space (DCGS)	2
LVESD.8 (b)	Min. drain contact to gate edge space (DCGS)	1
LVESD.8 (c)	Max. of at least one or nearest drain contact to gate edge space (DCGS)	4
G_LVESD.10	Recommended well tap COMP to active COMP space in channel length direction.	2
LVESD.11	Source COMP must enclose by LVS_Source	0
LVESD.12	LVS_Source must butt to Poly edge	0
G.LVESD.13**	Recommended at least one or nearest source contact to gate edge space (SCGS) when SAB cover drain-source over poly gate	0.7
LVESD.13(a)	Min. source contact to gate edge space (SCGS) when SAB cover drain-source over poly gate	0.15
LVESD.13(b)	Max. of at least one or nearest source contact to gate edge space (SCGS) when SAB cover drain-source over poly gate	1
COLVESD.7	Recommended/max. salicided block edge to at least one or nearest contact (CA)	0.22
COLVESD.7(a)	Min. salicided block edge to contact (CA)	0.15

Note: * *Appendix B: Rules not coded*

** Recommended rules , default OFF.

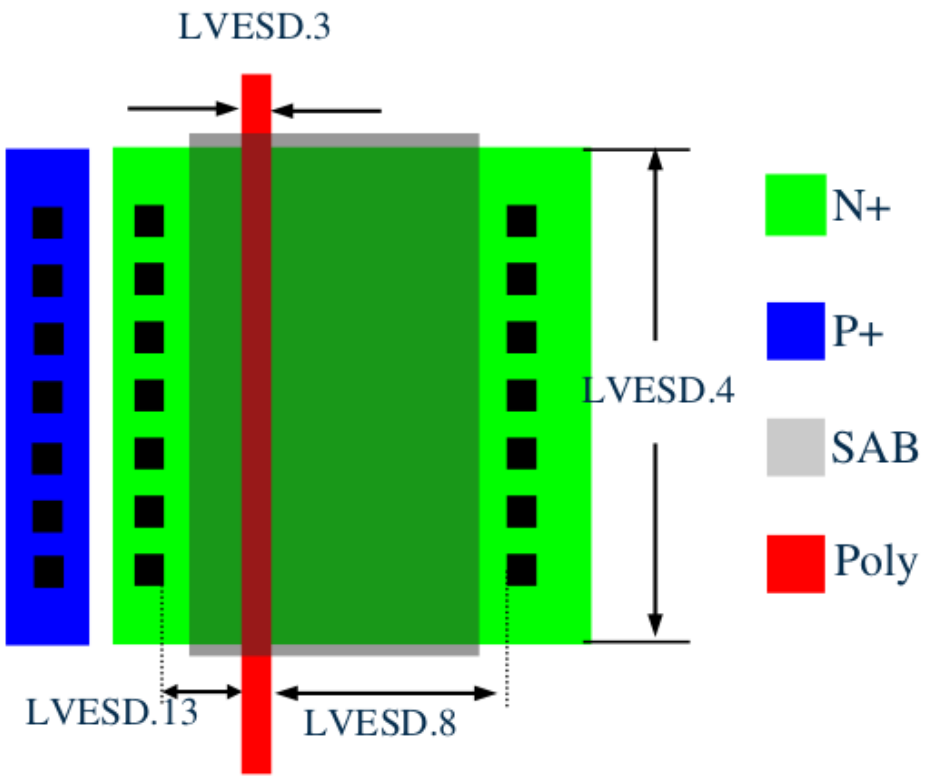

Top view of Gate Non-Salicided (GNS) 3.3V LV MOSFET

14.4.2 Design Guidelines for 3.3V LV Diode

The following design guidelines are recommended for 3.3V LV N+/PWELL diode for good ESD protection.

14.4.2.1 Minimum cathode junction width (DL) is 0.36 um. Recommended two rows of contact in the cathode side

14.4.2.2 Recommended maximum cathode finger width (DW) is 40um.

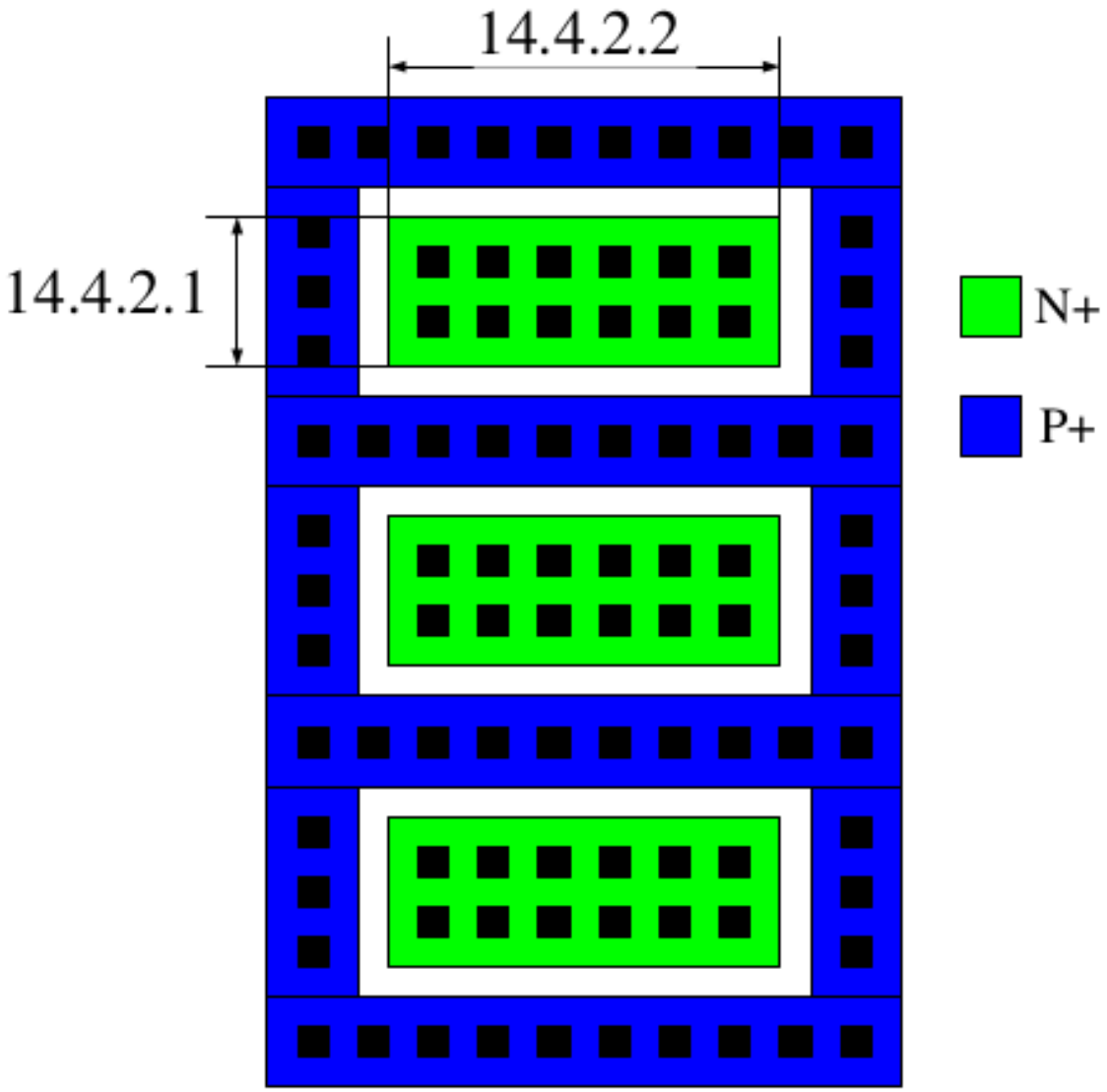

Top view of 3.3V LV N+/PWELL diode

The following design guidelines are recommended for 3.3V LV P+/NWELL diode for good ESD protection.

14.4.2.3 Minimum anode junction width (DL) is 0.36 um. Recommended two rows of contact in the cathode side.

14.4.2.4 Recommended maximum anode finger width (DW) is 40um.

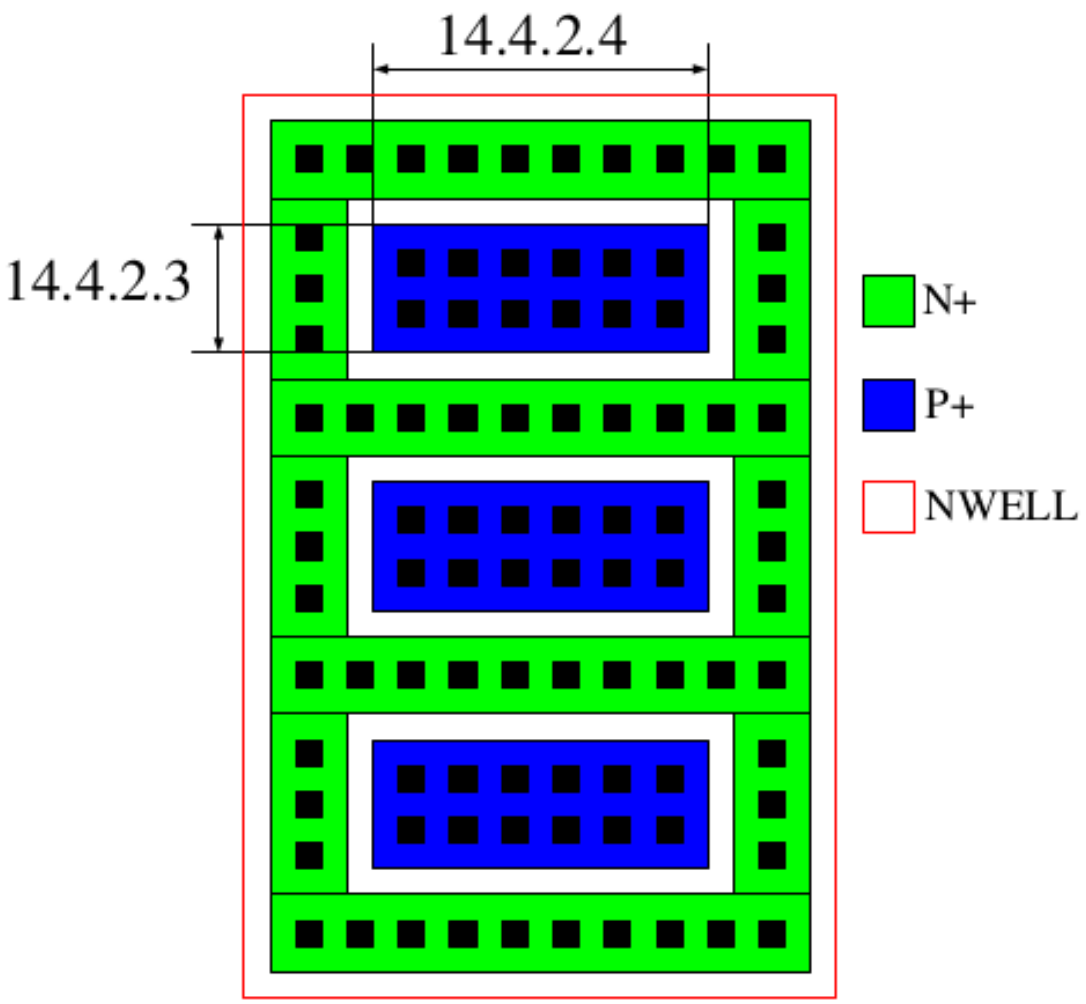

Top view of 3.3V LV P+/NWELL diode

The following design guidelines are recommended for 3.3V LV NWELL/PSUB diode for good ESD protection.

14.4.2.5 Minimum anode junction width (DL) is 1.19 um.

14.4.2.6 Recommended maximum anode finger width (DW) is 40um.

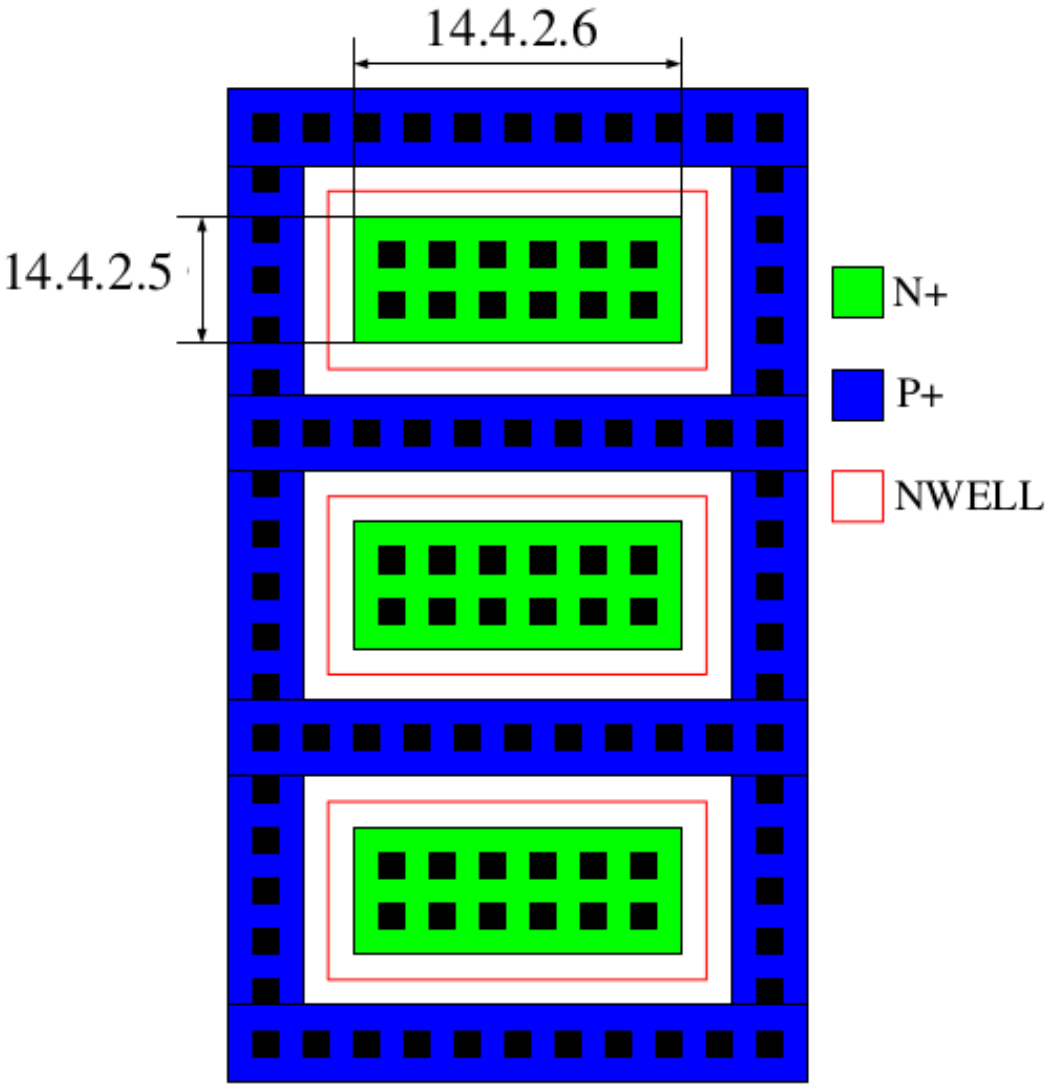

Top view of 3.3V LV NWELL/PSUB diode

14.4.3 Design Guidelines for 5V/6V HV SAB NMOS Device

When using HV NMOSFET for ESD protection devices, it shall be marked by ESD_MK mark layer. The following layout guidelines are recommended.

Table 60: 5V/6V HV SAB NMOS Device Rules

RULE NO.	DESCRIPTION	RULE
HVNESD.1	HV NMOSFET used for ESD protection should be enclosured by ESD_MK, ESD_MK must enclose well pick-up implant	0
HVNESD.2*	Poly Channel-length for each finger in multi-finger transistors must be same	
G_HVNESD.3	Min. channel length for each finger (Recommended)	0.8
G.HVNESD.4 (a)**	Recommended finger width for each finger	25
HVNESD.4 (b)	Min. finger width for each finger	20
HVNESD.4 (c)	Max. finger width for each finger	60
G.HVNESD.5(a)**	Recommended number of fingers share one pick-up ring in multi-finger transistors.	12
HVNESD.5 (b)	Max. number of fingers share one pick-up ring in multi-finger transistors	18
G.HVNESD.6 (a)**	Recommended total finger width	300
HVNESD.6(b)	Min. total finger width	200
HVNESD.6(c)	Max. total finger width	720
HVNESD.7	SAB should cover drain and source and overlap gate or cover drain only with rule HVNESD.7(a) partly overlap poly Gate	
HVNESD.7(a)	Min/max SAB overlap Poly gate	0.05
G.HVNESD.8 (a)**	Recommended at least one or nearest drain contact to gate edge space (DCGS)	4
HVNESD.8 (b)	Min. drain contact to gate edge space (DCGS)	1
HVNESD.8 (c)	Max. at least one or nearest drain contact to gate edge space (DCGS)	4
G_HVNESD.10	Recommended well tap COMP to active COMP space in channel length direction.	1.5
HVNESD.11	Source COMP must enclose by LVS_Source	0
HVNESD.12	LVS_Source must butt to Poly edge	0
G.HVNESD.13**	Recommended at least one or nearest source contact to gate edge space (SCGS) when SAB cover drain-source over poly gate	0.5
HVNESD.13 (a)	Min. source contact to gate edge space (SCGS) when SAB cover drain-source over poly gate	0.15
HVNESD.13(b)	Max. at least one or nearest source contact to gate edge space (SCGS) when SAB cover drain-source over poly gate	1
COHVNESD.7	Recommended/max. salicided block edge to at least one or nearest contact (CA)	0.22
COHVNESD.7(a)	Min. salicided block edge to contact (CA)	0.15

Note: * *Appendix B: Rules not coded*

** Recommended rules , default OFF.

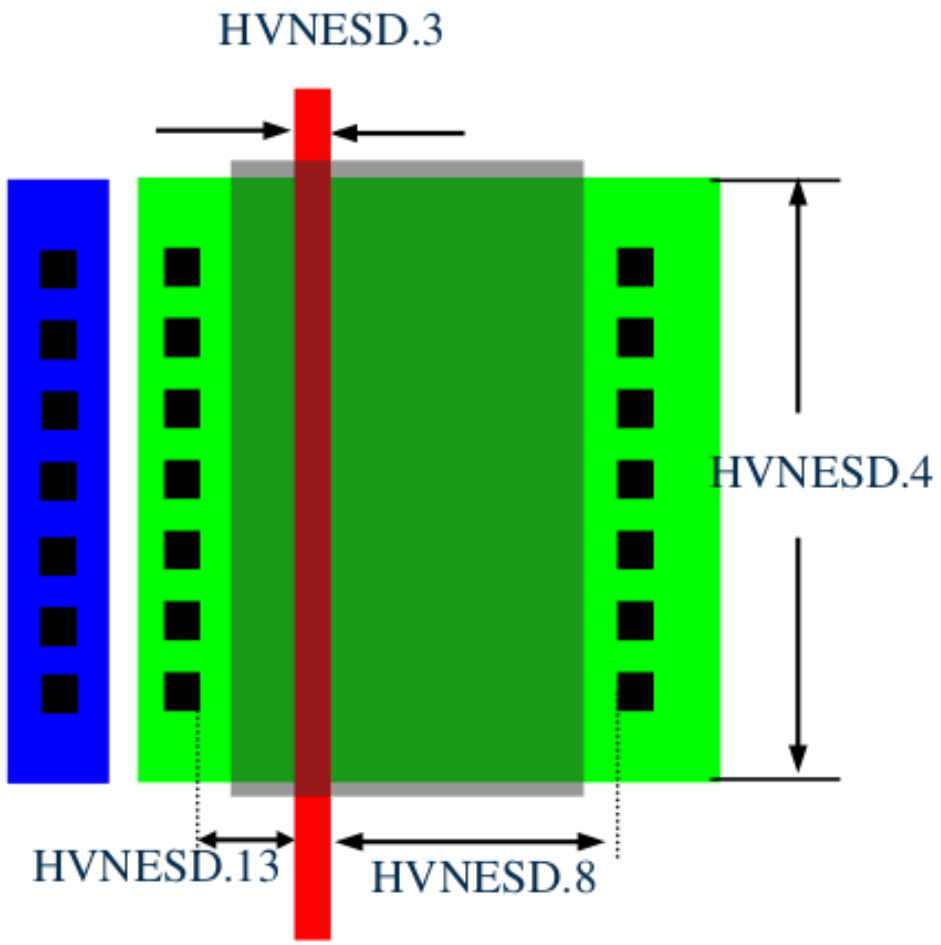

Top view of Gate Non-Salicide (GNS) 5V/6V HV NMOS

14.4.4 Design Guidelines for 5V/6V HV SAB PMOS Device

When using HV PMOSFET for ESD protection devices, it shall be marked by ESD_MK mark layer. The following layout guidelines are recommended.

Table 61: 5V/6V HV SAB PMOS Device Rules

RULE NO.	DESCRIPTION	RULE
HVPESD.1	**HV PMOSFET used for ESD protection should be enclosured** by ESD_MK, ESD_MK must enclose well pick-up implant	0
HVPESD.2*	Poly Channel-length for each finger in multi-finger transistors must be same	
G_HVPESD.3	Min. channel length for each finger (Recommended)	0.7
G.HVPESD.4 (a)**	Recommended finger width for each finger	25
HVPESD.4 (b)	Min. finger width for each finger	20
HVPESD.4 (c)	Max. finger width for each finger	60
G.HVPESD.5 (a)**	Recommended number of fingers share one pick-up ring in multi-finger transistors.	18
HVPESD.5(b)	Max. number of fingers share one pick-up ring in multi-finger transistors	24
G.HVPESD.6(a)**	Recommended total finger width	450
HVPESD.6(b)	Min. total finger width	300
HVPESD.6(c)	Max. total finger width	720
HVPESD.7	SAB should cover drain and source and overlap gate or cover drain only with rule HVPESD.7(a) partly overlap poly Gate	
HVPESD.7 (a)	Min/max SAB overlap Poly gate	0.05
G.HVPESD.8 (a)**	Recommeded at least one or nearest drain contact to gate edge space (DCGS)	3
HVPESD.8(b)	Min. drain contact to gate edge space (DCGS)	1
HVPESD.8(c)	Max. at least one or nearest drain contact to gate edge space (DCGS)	4
G_HVPESD.10	Recommended NField well tap COMP to active COMP space in channel length direction.	2
HVPESD.11	Source COMP must enclose by LVS_Source	0
HVPESD.12	LVS_Source must butt to Poly edge	0
G.HVPESD.13**	Recommended at least one or nearest source contact to gate edge space (SCGS) when SAB cover drain-source over poly gate	0.5
HVPESD.13(a)	Min. source contact to gate edge space (SCGS) when SAB cover drain-source over poly gate	0.15
HVPESD.13(b)	Max. at least one or nearest source contact to gate edge space (SCGS) when SAB cover drain-source over poly gate	1
COHVPESD.7	Recommended/max. salicided block edge to at least one or nearest contact (CA)	0.22
COHVPESD.7(a)	Min. salicided block edge to contact (CA)	0.15

Note: * *Appendix B: Rules not coded*

** Recommended rules , default OFF.

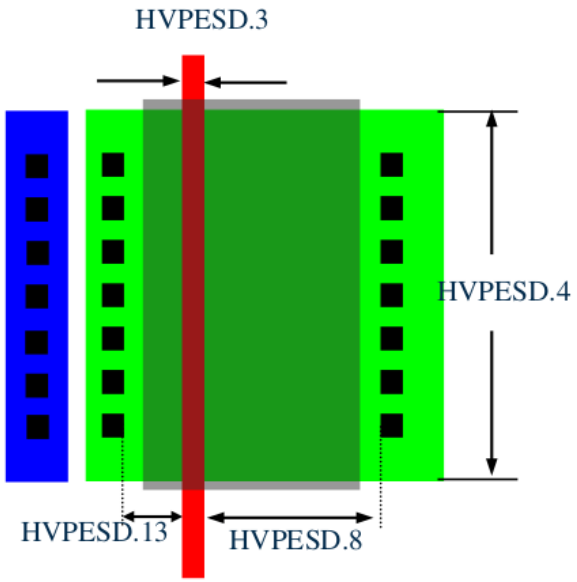

Top view of Gate Non-Salicided (GNS) 5V/6V HV PMOS

14.4.5 Design Guidelines for 5V/6V HV Diode

The following design guidelines are recommended for 5V/6V HV N+/PWELL diode for good ESD protection.

14.4.5.1 Minimum cathode junction width (DL) is 0.9 um.

14.4.5.2 Recommended maximum cathode finger width (DW) is 25um.

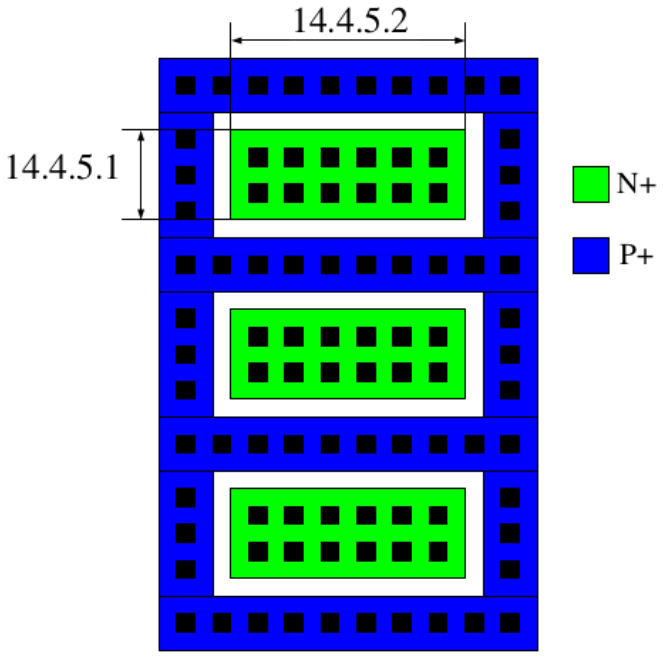

Top view of 5V/6V HV N+/PWELL diode

The following design guidelines are recommended for 5V/6V HV P+/NWELL diode for good ESD protection.

14.4.5.3 Minimum anode junction width (DL) is 0.9 um.

14.4.5.4 Recommended maximum anode finger width (DW) is 25um.

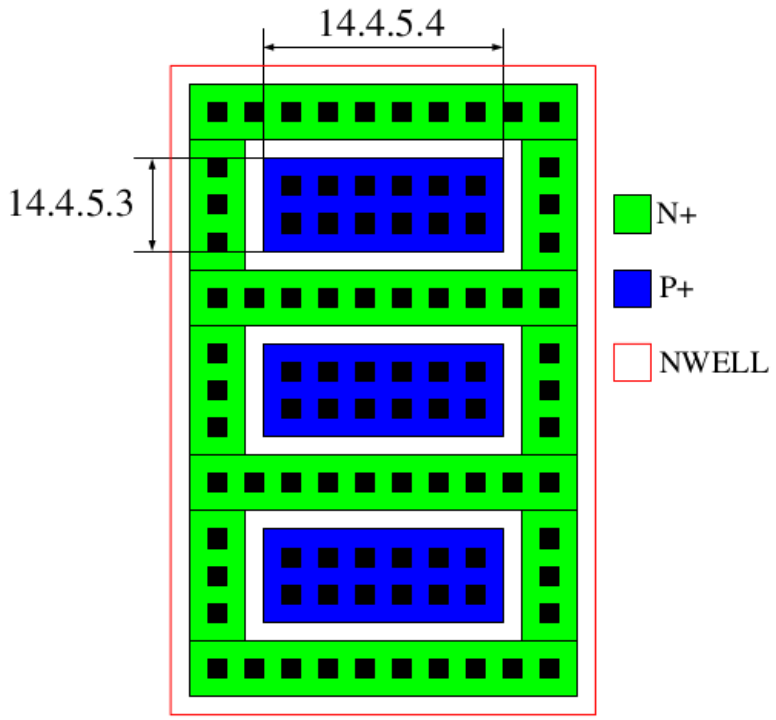

Top view of 3.3V HV P+/NWELL diode

14.5 ESD Characterization Data

The ESD characterization data for different ESD devices are summarized in the following.

14.5.1 ESD Performance from 3.3V NMOS transistor

ESD Performance from 3.3V NMOS transistor is summarized in following table. The TLP data for 3.3V grounded gate NMOS without ESD implant is showed in below.

ESD Parameter	Parameter Value (without ESD implant)
Avalanche Breakdown Voltage (Vt1)	~8.2V TLP Current (A)
Snapback Holding voltage (Vsp)	~4.4V
Second Breakdown Current (It2)	~9.25mA/um
Second Breakdown Voltage (Vt2)	~6.79V

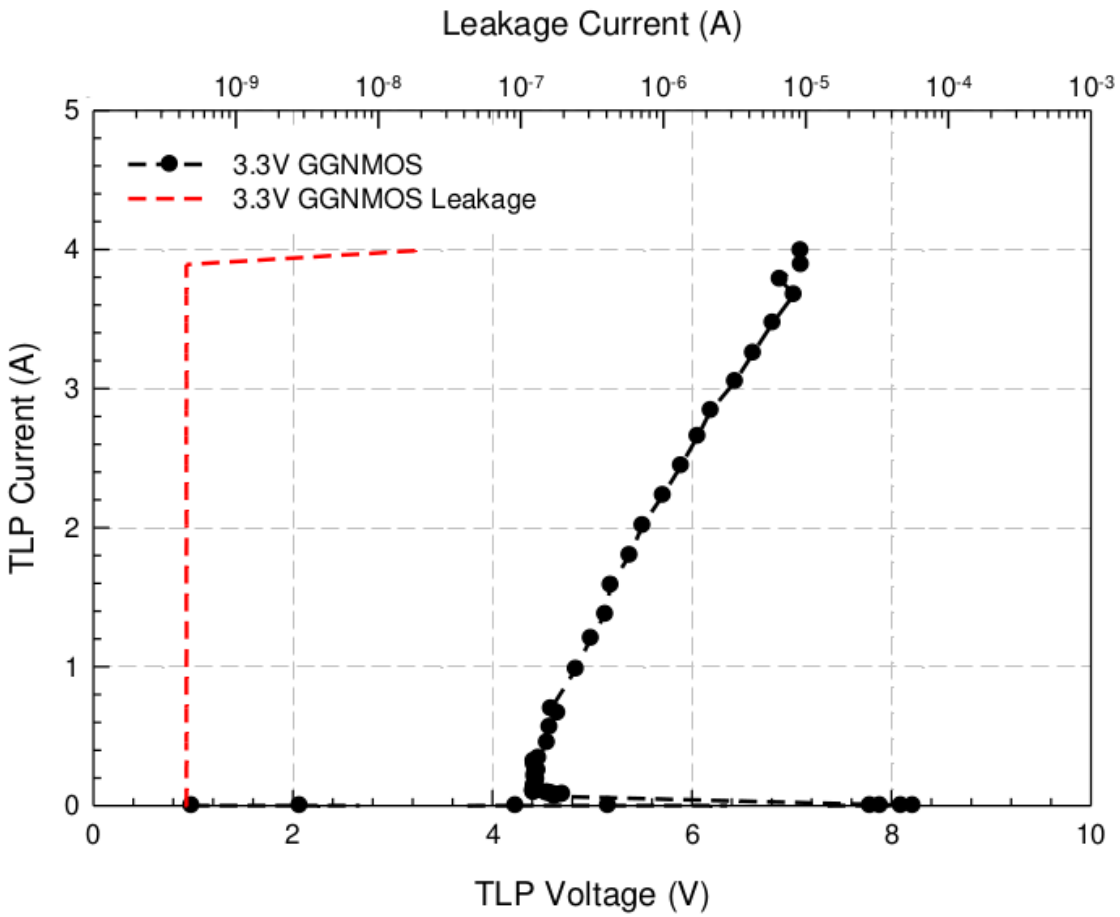

3.3V GGNMOS TLP IV Characteristics
(GL=0.3um, GW=50um, NF=8, DCGS=2um, SCGS=0.7um, gate non-silicided)

14.5.2 ESD Performance from 3.3V LV N+/PWELL diode

ESD Performance from 3.3V LV N+/PWELL diode is summarized in following table. The TLP data for 3.3V LV N+/PWELL diode is showed in below.

ESD Parameter	Parameter Value
Second Breakdown Current (It2)	~27.5mA/um
Second Breakdown Voltage (Vt2)	~3.1V

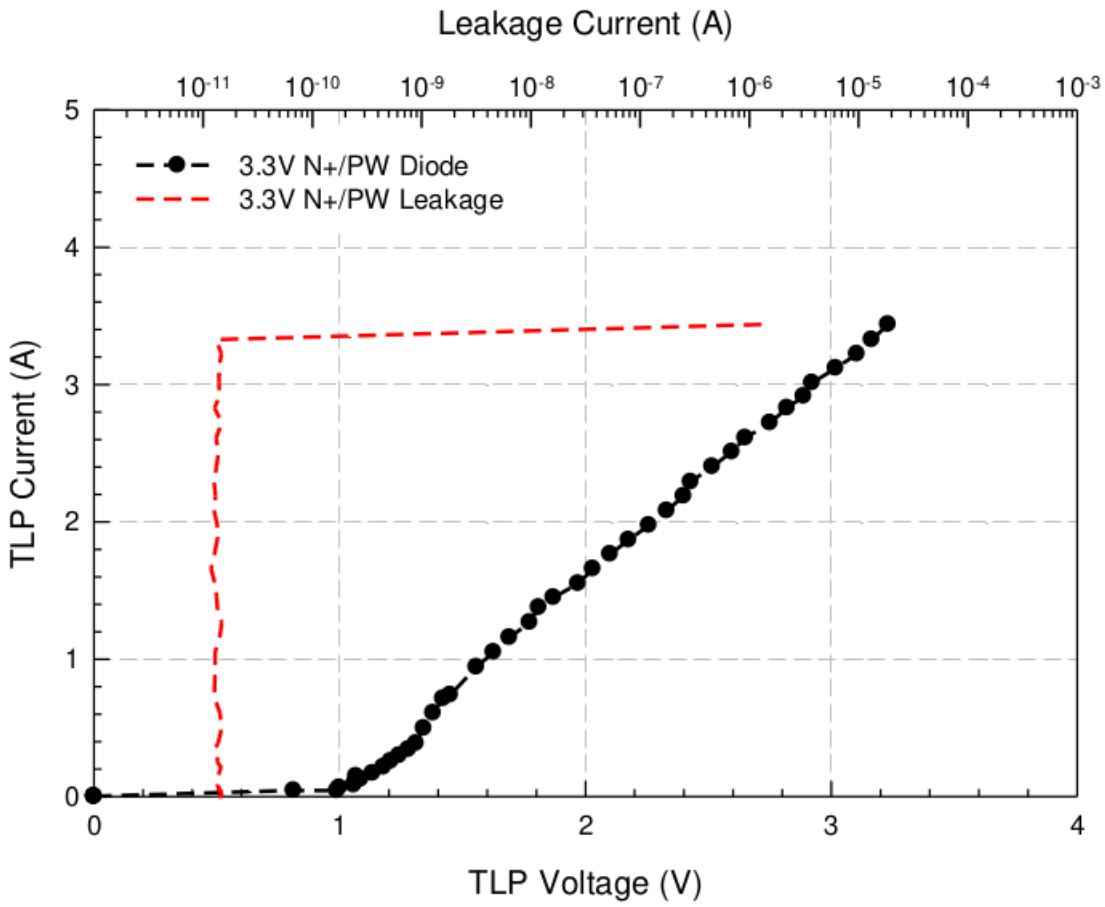

3.3V LV N+/PWELL Diode TLP IV Characteristics
(DW=0.36um, DL=40um, NF=3)

14.5.3 ESD Performance from 3.3V LV P+/NWELL diode

ESD Performance from 3.3V LV P+/NWELL diode is summarized in following table. The TLP data for 3.3V LV P+/NWELL diode is showed in below.

ESD Parameter	Parameter Value
Second Breakdown Current (It2)	~33.3mA/um
Second Breakdown Voltage (Vt2)	~3.5V/6V

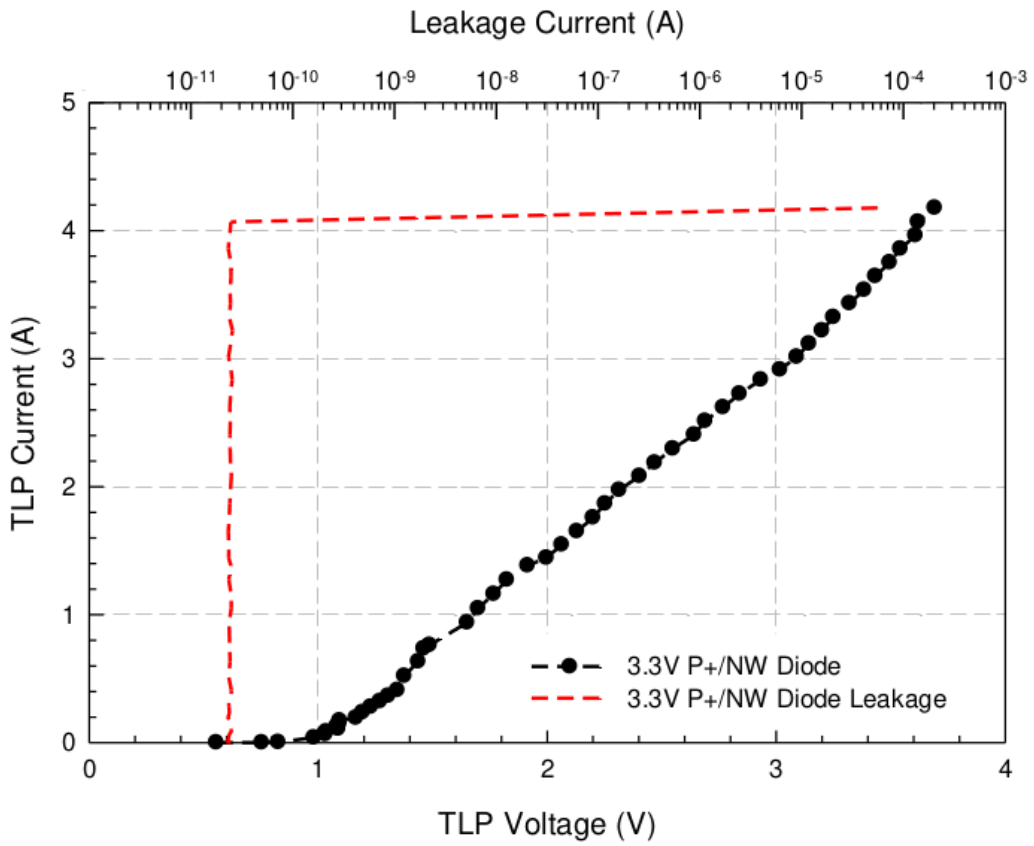

3.3V LV P+/NWELL Diode TLP IV Characteristics
(DW=0.83um, DL=40um, NF=3)

14.5.4. ESD Performance from 3.3V LV NWELL/PSUB diode

ESD Performance from 3.3V LV NWELL/PSUB diode is summarized in following table. The TLP data for 3.3V LV NWELL/PSUB diode is showed in below.

ESD Parameter	Parameter Value
Second Breakdown Current (It2)	~39.1mA/um
Second Breakdown Voltage (Vt2)	~3.7V

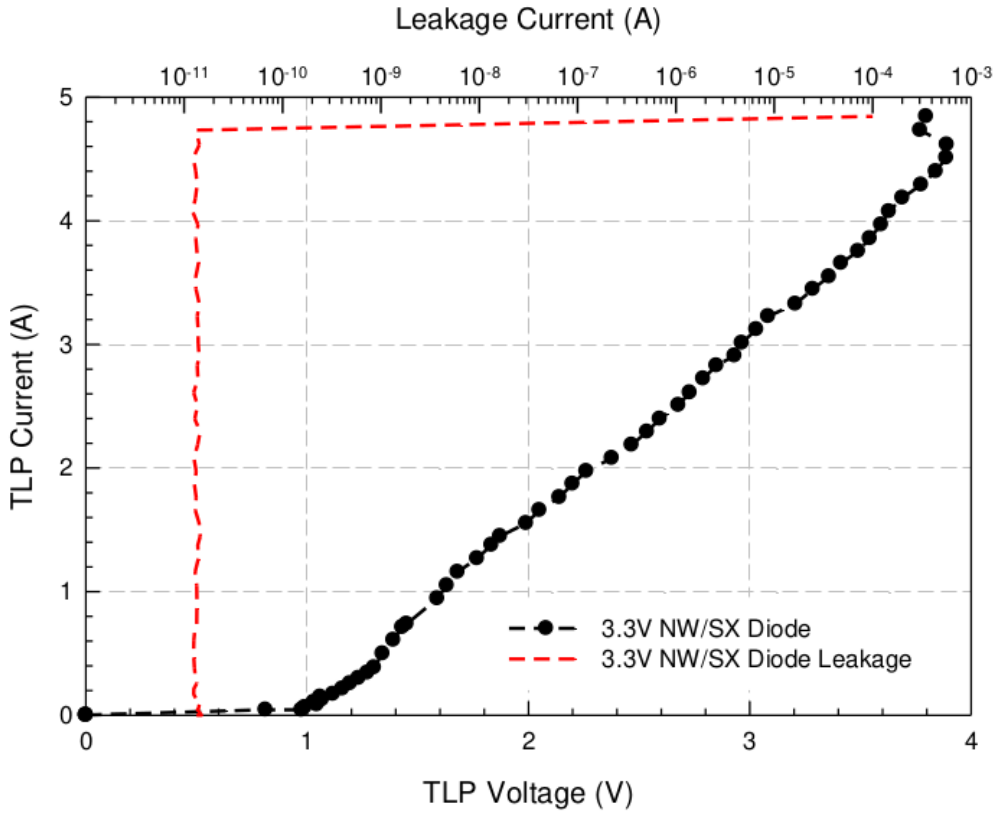

3.3V LV NWELL/PSUB Diode TLP IV Characteristics
(DW=1.19um, DL=40um, NF=3)

14.5.5 ESD Performance from 5V/6V NMOS transistor

ESD Performance from 5V/6V NMOS transistor is summarized in following table. The TLP data for 5V/6V grounded gate NMOS without ESD implant is showed in below.

ESD Parameter	Parameter Value (without ESD implant)
Avalanche Breakdown Voltage (Vt1)	~10.7V
Snapback Holding voltage (Vsp)	~6.2V TLP Current (A)
Second Breakdown Current (It2)	~7mA/um
Second Breakdown Voltage (Vt2)	~8V

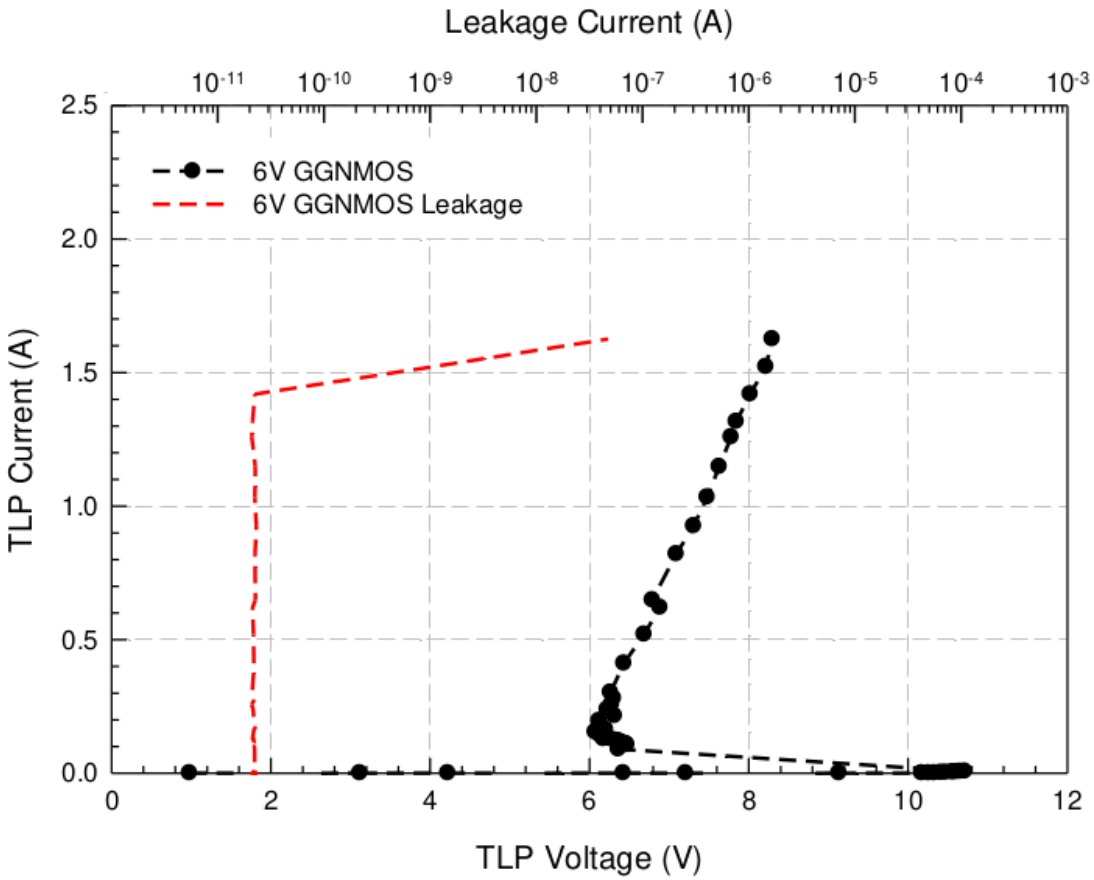

5V/6V GGNMOS TLP IV Characteristics
(GL=0.8um, GW=25um, NF=8, DCGS=4um, SCGS=0.5um, gate non-silicided)

14.5.6 ESD Performance from 5V/6V PMOS transistor

ESD Performance from 5V/6V PMOS transistor is summarized in following table. The TLP data for 5V/6V grounded gate PMOS without ESD implant is showed in below.

ESD Parameter	Parameter Value (without ESD implant)
Avalanche Breakdown Voltage (Vt1)	~9.7V
Second Breakdown Current (It2)	~5.3mA/um
Second Breakdown Voltage (Vt2)	~14.1V

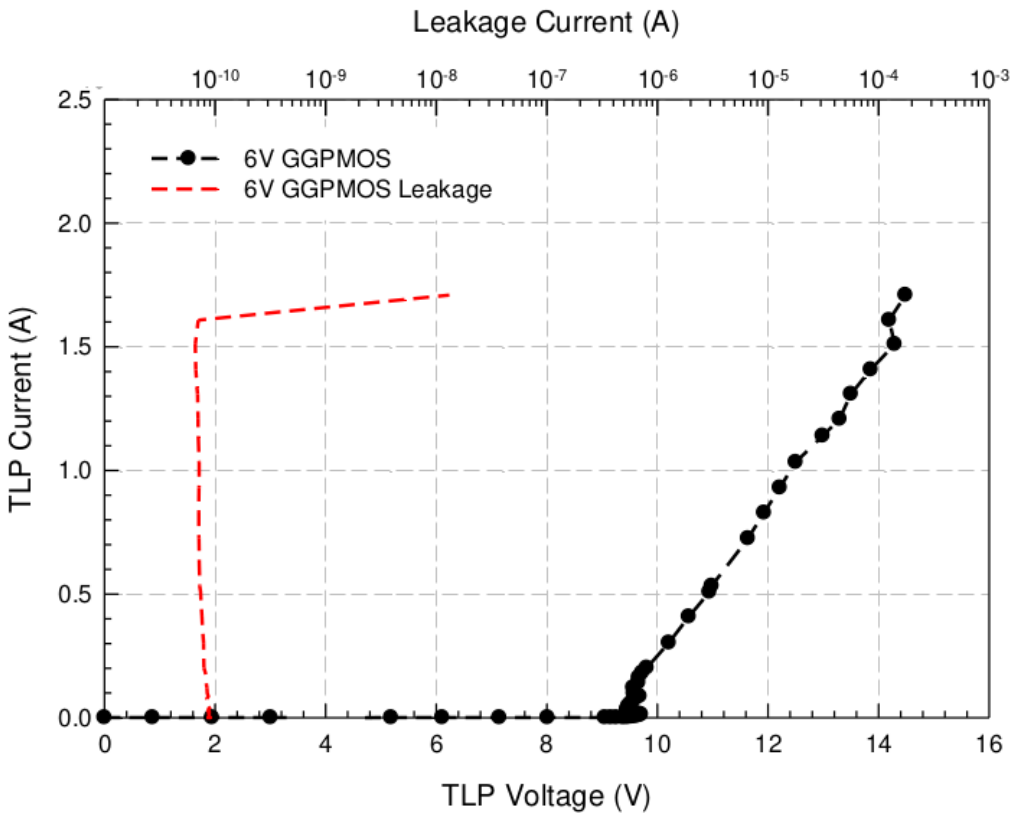

5V/6V GGPMOS TLP IV Characteristics
(GL=0.8um, GW=25um, NF=12, DCGS=4um, SCGS=0.5um, gate non-silicided)

14.5.7 ESD Performance from 5V/6V HV N+/PWELL diode

ESD Performance from 5V/6V HV N+/PWELL diode is summarized in following table. The TLP data for 5V/6V HV N+/PWELL diode is showed in below.

ESD Parameter	Parameter Value
Second Breakdown Current (It2)	~30mA/um
Second Breakdown Voltage (Vt2)	~6.7V

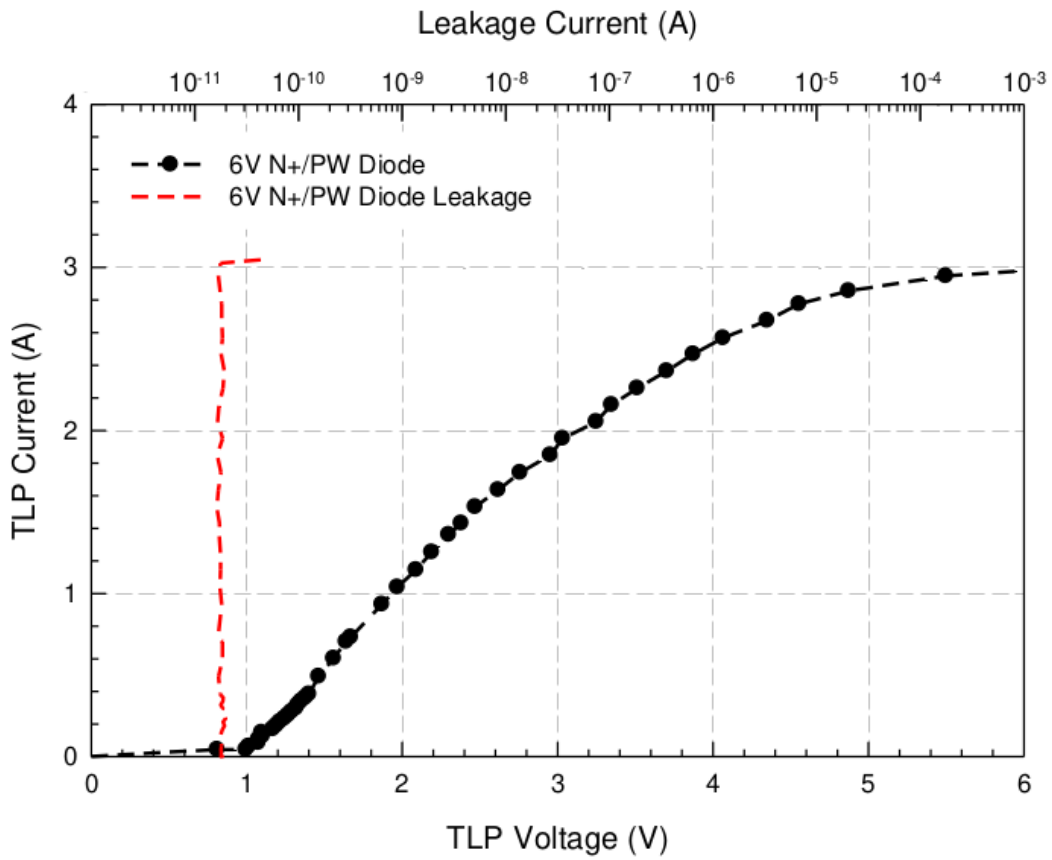

5V/6V HV N+/PWELL Diode TLP IV Characteristics
(DW=0.9um, DL=25um, NF=4)

14.5.8 ESD Performance from 5V/6V HV P+/NWELL diode

ESD Performance from 5V/6V HV P+/NWELL diode is summarized in following table. The TLP data for 5V/6V HV P+/NWELL diode is showed in below.

ESD Parameter	Parameter Value
Second Breakdown Current (It2)	~31mA/um
Second Breakdown Voltage (Vt2)	~6.9V

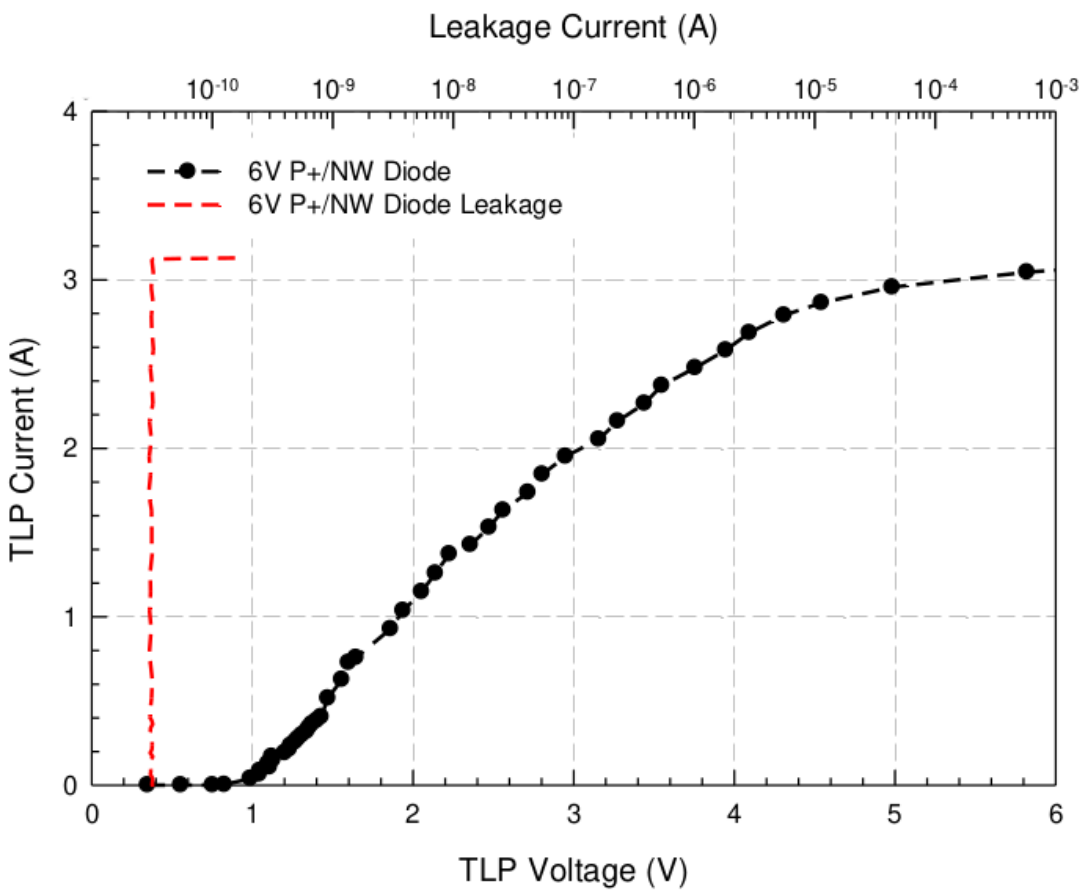

5V/6V HV P+/NWELL Diode TLP IV Characteristics
(DW=0.9um, DL=25um, NF=4)

14.6 Stress Relief Guidelines

The following rules and guidelines apply to wide metal lines normally used for power supply routing.

Reliability problems associated with these wide metal lines normally manifest it as dielectric film cracks and/or metal smeared as a results of stress induced due to thermal mismatch between different films in integrated circuits like metal, dielectrics & molding compounds.

14.6.1 Rules for Location of Metal Line to be slotted

1. Metal slots should be used on any metal line that is wider than 30µm
2. Slots for metal lines wider than 30µm should be placed parallel to the direction of current flow.

14.6.2 Die Corners Guidelines

1. No active circuitry is allowed within 400 um of corner of die (see figure below for illustration).
2. Within 400 um of the die corner must use 45-degree turn away direction for both metal line and slot.
3. Minimum metal to die corner spacing is 300 um.

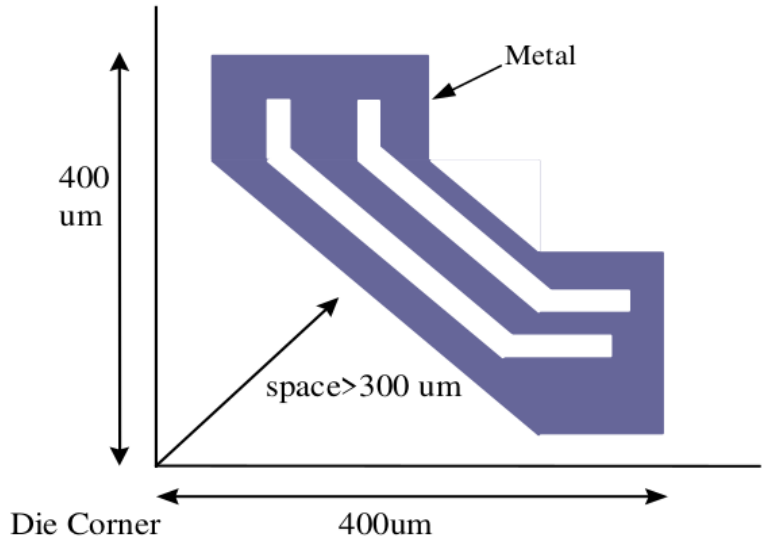

14.6.3 Metal Slotting rules

Use Metal1_Slot, Metal2_Slot, Metal3_slot, Metal4_Slot, Metal5_Slot and MetalTop_Slot (slot mark layers) to identify respective metal layer slotting area. These layers will be used to create the slots automatically (by logic operation) and there is no need to create physical holes (slots) in the routing metal lines. Below rule shall be followed for metal slotting layout.

Table 62: Metal Slotting rules

RULE NO.	DESCRIPTION	LAYOUT RULE
MSLOT.1	Maximum metal width without slotting	30
MSLOT.2	Minimum slot width (slot mark layers)	2
MSLOT.3	Slot length (slot mark layers)	
	a. Minimum	10
	b. Maximum	250
MSLOT.4	Slot space (slot mark layers)	
	a. Minimum	10
	b. Maximum	30
MSLOT.5	Minimum slot (slot mark layers) to metal edge spacing	10
MSLOT.6	For multiple slots that spans the metal width, slots should be staggered.	
MSLOT.7	Minimum space from via-n to metal-n slot	0.2
MSLOT.8	Minimum space from via-(n-1) / contact to metal-n slot	0.2
	(a) MetalTop area directly under the Pad	
	(b) MIM bottom plate directly under FuseTop	
	(c) MetalTop directly under FuseWindow_D	
	(d) Metal3 area (for MIM top plate connection) directly enclosed by FuseTop	
	(e) MetalTop area directly under UBM layers	
	Minimum distance to these layers	5
MSLOT.10	Slot mark layer on the metal hole (same metal level, e.g. Metal1_Slot on the Metal1 hole) are not allowed	

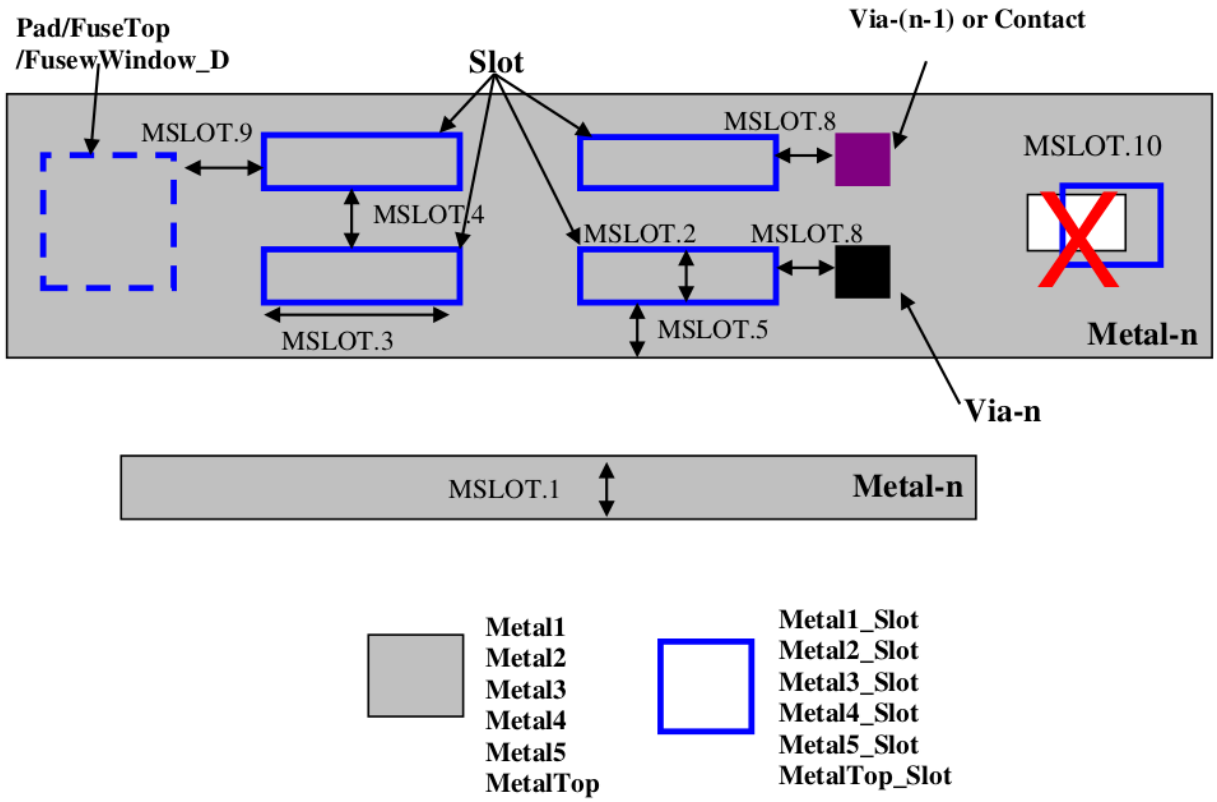

4.1.15 Appendix A: Device List for Model and LVS Deck

The Device list is a summary of all available devices involved in this design rule. Also, Spice model and LVS deck are built on this device list. Customer layout team is encouraged to reference this device list for better alignment on model and LVS.

Table 63: Device List for Model and LVS Deck

No.	Device Name	Model Name	Description	Spec
MOSFET				
	nfet_03v3	nfet_03v3	3.3V NMOS (Outside DNWELL)	YI-141-SM064
	nfet_03v3_dn	nfet_03v3	3.3V NMOS (Inside DNWELL)	YI-141-SM064
	pfet_03v3	pfet_03v3	3.3V PMOS (Outside DNWELL)	YI-141-SM064
	pfet_03v3_dn	pfet_03v3	3.3V PMOS (Inside DNWELL)	YI-141-SM064
	nfet_05v0	nfet_06v0	5V NMOS (Outside DNWELL) (with V5_XTOR mark layer)	YI-141-SM064
	nfet_05v0_dn	nfet_06v0	5V NMOS (Inside DNWELL) (with V5_XTOR mark layer)	YI-141-SM064
	pfet_05v0	pfet_06v0	5V PMOS (Outside DNWELL) (with V5_XTOR mark layer)	YI-141-SM064
	pfet_05v0_dn	pfet_06v0	5V PMOS (Inside DNWELL) (with V5_XTOR mark layer)	YI-141-SM064
	nfet_06v0	nfet_06v0	6V NMOS (Outside DNWELL)	YI-141-SM064
	nfet_06v0_dn	nfet_06v0	6V NMOS (Inside DNWELL)	YI-141-SM064

continues on next page

Table 63 – continued from previous page

	pfet_06v0	pfet_06v0	6V PMOS (Outside DNWELL)	YI-141-SM064
	pfet_06v0_dn	pfet_06v0	6V PMOS (Inside DNWELL)	YI-141-SM064
	nfet_06v0_nvt	nfet_06v0_nvt	6V Native NMOS	YI-141-SM064
	nfet_10v0_asym	nfet_10v0_asym	LD-NMOS (Asymmetrical)	SM-BB-000149
	pfet_10v0_asym	pfet_10v0_asym	LD-PMOS (Asymmetrical)	SM-BB-000149
BJT				
	npn_10p00x10p00	npn_10p00x10p00	VNPN (Nplus-LVPWELL-DNWELL), emitter size 10um x 10um	YI-141-SM064
	npn_05p00x05p00	npn_05p00x05p00	VNPN (Nplus-LVPWELL-DNWELL), emitter size 5um x 5um	YI-141-SM064
	npn_00p54x16p00	npn_00p54x16p00	VNPN (Nplus-LVPWELL-DNWELL), emitter size 0p54um x 16um	YI-141-SM064
	npn_00p54x08p00	npn_00p54x08p00	VNPN (Nplus-LVPWELL-DNWELL), emitter size 0p54um x 8um	YI-141-SM064
	npn_00p54x04p00	npn_00p54x04p00	VNPN (Nplus-LVPWELL-DNWELL), emitter size 0p54um x 4um	YI-141-SM064
	npn_00p54x02p00	npn_00p54x02p00	VNPN (Nplus-LVPWELL-DNWELL), emitter size 0p54um x 2um	YI-141-SM064
	pnp_10p00x10p00	pnp_10p00x10p00	VPNP (Pplus-Nwell-Psub), emitter size 10um x 10um	YI-141-SM064
	pnp_05p00x05p00	pnp_05p00x05p00	VPNP (Pplus-Nwell-Psub), emitter size 5um x 5um	YI-141-SM064
	pnp_10p00x00p42	pnp_10p00x00p42	VPNP (Pplus-Nwell-Psub), emitter size 0p42um x 10um	YI-141-SM064
	pnp_05p00x00p42	pnp_05p00x00p42	VPNP (Pplus-Nwell-Psub), emitter size 0p42um x 5um	YI-141-SM064
DIODE				
	diode_nd2ps_03v3	diode_nd2ps_03v3	3.3V N+/LVPWELL diode (Outside DNWELL)	YI-141-SM064
	diode_nd2ps_03v3	diode_nd2ps_03v3	3.3V N+/LVPWELL diode (Inside DNWELL)	YI-141-SM064
	diode_nd2ps_06v0	diode_nd2ps_06v0	5V/6V N+/LVPWELL Diode (Outside DNWELL)	YI-141-SM064
	diode_nd2ps_06v0	diode_nd2ps_06v0	5V/6V N+/LVPWELL Diode (Inside DNWELL)	YI-141-SM064
	diode_pd2nw_03v3	diode_pd2nw_03v3	3.3V P+/Nwell diode (Outside DNWELL)	YI-141-SM064
	diode_pd2nw_03v3	diode_pd2nw_03v3	3.3V P+/Nwell diode (Inside DNWELL)	YI-141-SM064
	diode_pd2nw_06v0	diode_pd2nw_06v0	5V/6V P+/Nwell diode (Outside DNWELL)	YI-141-SM064
	diode_pd2nw_06v0	diode_pd2nw_06v0	5V/6V P+/Nwell diode (Inside DNWELL)	YI-141-SM064
	diode_nw2ps_03v3	diode_nw2ps_03v3	3.3V Nwell/Psub diode	YI-141-SM064
	diode_nw2ps_06v0	diode_nw2ps_06v0	5V/6V Nwell/Psub diode	YI-141-SM064

continues on next page

Table 63 – continued from previous page

	diode_pw2dw_03v	diode_pw2dw	3.3V LVPWELL/DNWELL diode	YI-141-SM064
	diode_pw2dw_06v	diode_pw2dw	5V/6V LVPWELL/DNWELL diode	YI-141-SM064
	diode_dw2ps_03v3	diode_dw2ps	3.3V DWENLL/Psub diode	YI-141-SM064
	diode_dw2ps_06v0	diode_dw2ps	5V/6V DWENLL/Psub diode	YI-141-SM064
	sc_diode	sc_diode	Schottky diode	YI-141-SM064
RESISTOR				
	nplus_u	nplus_u	3-terminal unsalicided n+ diffusion resistor (Outside DNWELL)	YI-141-SM064
	nplus_u_dw	nplus_u	3-terminal unsalicided n+ diffusion resistor (Inside DNWELL)	YI-141-SM064
	pplus_u	pplus_u	3-terminal unsalicided P+ diffusion resistor (Outsdie DNWELL)	YI-141-SM064
	pplus_u_dw	pplus_u	3-terminal unsalicided P+ diffusion resistor (Inside DNWELL)	YI-141-SM064
	nplus_s	nplus_s	3-terminal salicided n+ diffusion resistor (Outside DNWELL)	YI-141-SM064
	nplus_s_dw	nplus_s	3-terminal salicided n+ diffusion resistor (Inside DNWELL)	YI-141-SM064
	pplus_s	pplus_s	3-terminal salicided P+ diffusion resistor (Outside DNWELL)	YI-141-SM064
	pplus_s_dw	pplus_s	3-terminal salicided P+ diffusion resistor (Inside DNWELL)	YI-141-SM064
	nwell	nwell	3-terminal Nwell resistor under STI (Outside DNWELL)	YI-141-SM064
	pwell	pwell	3-terminal LVPWELL resistor under STI (Inside DNWELL only)	YI-141-SM064
	npolyf_u	npolyf_u	3-terminal unsalicided n+ poly resistor (Outside DNWELL)	YI-141-SM064
	npolyf_u_dw	npolyf_u	3-terminal unsalicided n+ poly resistor (Inside DNWELL)	YI-141-SM064
	ppolyf_u	ppolyf_u	3-terminal unsalicided p+ poly resistor (Outside DNWELL)	YI-141-SM064
	ppolyf_u_dw	ppolyf_u	3-terminal unsalicided p+ poly resistor (Inside DNWELL)	YI-141-SM064
	npolyf_s	npolyf_s	3-terminal salicided n+ poly resistor (Outside DNWELL)	YI-141-SM064
	npolyf_s_dw	npolyf_s	3-terminal salicided n+ poly resistor (Inside DNWELL)	YI-141-SM064
	ppolyf_s	ppolyf_s	3-terminal salicided p+ poly resistor (Outside DNWELL)	YI-141-SM064
	ppolyf_s_dw	ppolyf_s	3-terminal salicided p+ poly resistor (Inside DNWELL)	YI-141-SM064
	ppolyf_u_1k	ppolyf_u_1k	1k high-Rs p+ poly resistor (3.3V area, outside DNWELL)	YI-141-SM064
	ppolyf_u_1k_dw	ppolyf_u_1k	1k high-Rs p+ poly resistor (3.3V area, inside DNWELL)	YI-141-SM064
	ppolyf_u_2k	ppolyf_u_2k	2k high-Rs p+ poly resistor (3.3V area, outside DNWELL)	YI-141-SM064

continues on next page

Table 63 – continued from previous page

	ppolyf_u_2k_dw	ppolyf_u_2k	2k high-Rs p+ poly resistor (3.3V area, inside DNWELL)	YI-141-SM064
	ppolyf_u_3k	ppolyf_u_3k	3k high-Rs p+ poly resistor (3.3V area, outside DNWELL)	YI-141-SM064
	ppolyf_u_3k_dw	ppolyf_u_3k	3k high-Rs p+ poly resistor (3.3V area, inside DNWELL)	YI-141-SM064
	ppolyf_u_1k_6p0	ppolyf_u_1k_6p0	1k high-Rs p+ poly resistor (5V/6V area, outside DNWELL)	YI-141-SM064
	ppolyf_u_1k_6p0_	ppolyf_u_1k_6p0	1k high-Rs p+ poly resistor (5V/6V area, inside DNWELL)	YI-141-SM064
	ppolyf_u_2k_6p0	ppolyf_u_2k_6p0	2k high-Rs p+ poly resistor (5V/6V area, outside DNWELL)	YI-141-SM064
	ppolyf_u_2k_6p0_	ppolyf_u_2k_6p0	2k high-Rs p+ poly resistor (5V/6V area, inside DNWELL)	YI-141-SM064
	ppolyf_u_3k_6p0	ppolyf_u_3k	3k high-Rs p+ poly resistor (5V/6V area, outside DNWELL)	YI-141-SM064
	ppolyf_u_3k_6p0_	ppolyf_u_3k	3k high-Rs p+ poly resistor (5V/6V area, inside DNWELL)	YI-141-SM064
	rm1	rm1	2-terminal Metal 1 resistor	YI-141-SM064
	rm2	rm2	2-terminal Metal 2 resistor	YI-141-SM064
	rm3	rm3	2-terminal Metal 3 resistor	YI-141-SM064
	tm6k	tm6k	2-terminal 6K Metal Top resistor	YI-141-SM064
	tm9k	tm9k	2-terminal 9K Metal Top resistor	YI-141-SM064
	tm11k	tm11k	2-terminal 11K Metal Top resistor	YI-141-SM064
	tm30k	tm30k	2-terminal 30K Top Metal resistor	YI-141-SM064
CAPACITOR (MIM)				
	cap_mim_1p0fF	cap_mim_1p0fF	1.0fF/um2 MIM capacitor	YI-141-SM064
	cap_mim_1p5fF	cap_mim_1p5fF	1.5fF/um2 MIM capacitor	YI-141-SM064
	cap_cap_mim_2p0	cap_mim_2p0fF	2.0fF/um2 MIM capacitor	YI-141-SM064
CAPACITOR (MOS)				
	cap_nmos_03v3	cap_nmos_03v3	3.3V NMOS capacitor (Outside DNWELL)	YI-141-SM064
	cap_nmos_03v3_d	cap_nmos_03v3	3.3V NMOS capacitor (Inside DNWELL)	YI-141-SM064
	cap_pmos_03v3	cap_pmos_03v3	3.3V PMOS capacitor (Outside DNWELL)	YI-141-SM064
	cap_pmos_03v3_d	cap_pmos_03v3	3.3V PMOS capacitor (Inside DNWELL)	YI-141-SM064
	cap_nmos_06v0	cap_nmos_06v0	5V/6V NMOS capacitor (Outside DNWELL)	YI-141-SM064
	cap_nmos_06v0_d	cap_nmos_06v0	5V/6V NMOS capacitor (inside DNWELL)	YI-141-SM064
	cap_pmos_06v0	cap_pmos_06v0	5V/6V PMOS capacitor (Outside DNWELL)	YI-141-SM064
	cap_pmos_06v0_d	cap_pmos_06v0	5V/6V PMOS capacitor (Outside DNWELL)	YI-141-SM064

continues on next page

Table 63 – continued from previous page

	cap_nmos_03v3_b	cap_nmos_03v3_b	3.3V NMOS capacitor (inside NWell)	YI-141-SM064
	cap_pmos_03v3_b	cap_pmos_03v3_b	3.3V PMOS capacitor (inside Psub)	YI-141-SM064
	cap_nmos_06v0_b	cap_nmos_06v0_b	5V/6V NMOS capacitor (inside NWell)	YI-141-SM064
	cap_pmos_06v0_b	cap_pmos_06v0_b	5V/6V PMOS capacitor (inside Psub)	YI-141-SM064
ESD (SAB MOSFET)				
	nfet_03v3_dss	nfet_03v3_dss	3.3V SAB NMOS (Outside DNWELL)	YI-141-SM064
	nfet_03v3_dn_dss	nfet_03v3_dss	3.3V SAB NMOS (Inside DNWELL)	YI-141-SM064
	nfet_05v0_dss	nfet_06v0_dss	5V SAB NMOS (Outside DNWELL) (with V5_XTOR mark layer)	YI-141-SM064
	nfet_05v0_dn_dss	nfet_06v0_dss	5V SAB NMOS (Inside DNWELL) (with V5_XTOR mark layer)	YI-141-SM064
	nfet_06v0_dss	nfet_06v0_dss	6V SAB NMOS (Outside DNWELL)	YI-141-SM064
	nfet_06v0_dn_dss	nfet_06v0_dss	6V SAB NMOS (Inside DNWELL)	YI-141-SM064
	pfet_03v3_dss	pfet_03v3_dss	3.3V SAB PMOS (Outside DNWELL)	YI-141-SM064
	pfet_03v3_dn_dss	pfet_03v3_dss	3.3V SAB PMOS (Inside DNWELL)	YI-141-SM064
	pfet_05v0_dss	pfet_06v0_dss	5V SAB PMOS (Outside DNWELL) (with V5_XTOR mark layer)	YI-141-SM064
	pfet_05v0_dn_dss	pfet_06v0_dss	5V SAB PMOS (Inside DNWELL) (with V5_XTOR mark layer)	YI-141-SM064
	pfet_06v0_dss	pfet_06v0_dss	6V SAB PMOS (Outside DNWELL)	YI-141-SM064
	pfet_06v0_dn_dss	pfet_06v0_dss	6V SAB PMOS (Inside DNWELL)	YI-141-SM064
eFuse				
	eFuse	efuse	Eletrically programmable fuse element	YI-141-SM064

4.1.16 Appendix B: Rules not coded

Table 64: Metal Slotting rules

* DN.Note1	• Both 3.3 and 6V transistors are not allowed in the same DNWELL
* LPW.4	• If LVPWELL is used as resistor, it must be coverd by RES_MK (for LVS purpose)
* NW.7	• If Nwell is used as resistor, it must be covered by RES_MK (for LVS purpose)
* DF.1b	• Width with low sheet resistivity (guideline)
* DF.15a	• NCOMP inside DNWELL and Dualgate, but outside LVPWELL can only be connected to 6V VDD
* DF.15b	• NCOMP inside DNWELL but outside Dualgate and LVPWELL can only be connected to 3.3V VDD

continues on next page

Table 64 – continued from previous page

* DV.4	• Circuits covered by Dualgate layer will have 6V gate oxide for 6V operation
* PL.3b	• Poly 2 space on active for low active sheet resistivity (guideline)
* PL.10	• Maximum Poly2 current density
* CO.6iii	• Minimum metal 1 overlap of contact on all sides of min. contact resistance variation (guideline)
* Vn.3iii	• Minimum metal-n overlap of via-n on all sides for min. via-n resistance variation (guideline)
* Vn.4iii	• Minimum metal-(n+1) overlap of via-n on all sides for min. via-n resistance variation (guideline)
* Vn.5	• Vian stack over contact is permitted (allowable rules)

continues on next page

Table 64 – continued from previous page

* CUP.4	• Omitted (Guidelines)
* CUP.7a-b	• Omitted (Guidelines)
* PRES.8	• Maximum current density of poly resistor (mA/um)
* HRES.11	• Maximum current density of poly resistor (mA/um)
* LRES.8	• Maximum current density of poly resistor (mA/um)
* MIM.12	• Commented (not coded by default). Caught by LVS. If user wants to check, uncomment the section
* G.MIM	• There cannot be any sensitive matching analog circuitry underneath MIM (Guideline)
* MIMTM.12	• Commented (not coded by default). Caught by LVS. If user wants to check, uncomment the section

continues on next page

Table 64 – continued from previous page

* G.MIMTM	• There cannot be any sensitive matching analog circuitry underneath MIM (Guideline)
* 10.6.2	• Matched pair layout guidelines
* O.SB.13	• Min Salicide block overlap with poly2 = 0
* O.SB.5b_MV	• Min. space from salicide block to unrelated Poly2 on COMP = 0
* O.SB.15b	• Min space from unsalicided Poly2 to unrelated Nplus/Pplus along Poly2 line = 0
* 11.0	• SCRIBE LINE & GUARD RING GUIDELINES (Except Guard Ring design rule check)
* GR.9	• GR.9 is partially coded. All Vias shall be put in a staggered row

continues on next page

Table 64 – continued from previous page

* GR.10	• There must be rows of contact in the seal ring area
* 13.0	• RELIABILITY GUIDELINES (Except Latchup rules)
* LU.7	• Guideline and not codeable
* LU.8	• Guideline and not codeable
* LU.9	• Guideline and not codeable
* LU.10	• Guideline and not codeable
* LVESD.2	• Poly Channel-length for each finger in multi-finger transistors must be same
* HVNESD.2	• Poly Channel-length for each finger in multi-finger transistors must be same
* HVPESD.2	• Poly Channel-length for each finger in multi-finger transistors must be same

continues on next page

Table 64 – continued from previous page

* 14.7.3.6	• For multiple slots that spans the metal width, slots should be staggered
* DE.1	• Dummp COMP exclude and dummy poly/metal exclude layers shall be drawn only if necessary
* DCF.2a	• Min/Max Adjustment placement Space between dummy COMP cells
* DCF.3	• Stagger both X and Y direction = 1.6
* DCF.7a	• Space from dummy COMP in prime die including guard ring to scribe line = 8.0
* DCF.7b	• Space from dummy COMP in frame to edge of frame = 6
* DCF.7c	• Space from dummy COMP in frame to any frame cell except non-ET = 10.0

continues on next page

Table 64 – continued from previous page

* DCF.7d	• Space from dummy COMP in SLM Etest pattens or SLM reliability test patterns to the boundary of test patterns = 6.0
* DCF.9	• Space from dummp COMP to Pad (guide-line)
* DCF.10	• Remove trun-cated dummy squares
* DPF.2a	• Space between dummy Poly2
* DPF.3	• Stagger both X and Y direction = 1.6
* DPF.7	• Space from dummy Poly2 in prime die to scribe line = 25.7
* DPF.10	• Remove trun-cated dummy squares
* DM.2a	• Min Dummy metal line space (for Layout) = 1.2

continues on next page

Table 64 – continued from previous page

* DM.9	• Do not use exact replicates of dummy metal fill patterns for consecutive metal layers to avoid dielectric and metal stress problems. (Offsets value: 0.5)
* DM.10	• Offset between the Dummy metal of the same layers = 0.5

CHAPTER

FIVE

VERSIONING INFORMATION

5.1 Version Number Format

Version numbers for both the PDK and the supplied libraries are fully specified by a 3-digit version number followed by a git commit count and a git commit short hash.

The 3-digit-number will be tagged in the associated git repository as vX.Y.Z and the fully specified value can be found by running git describe tool inside the correct git repository.

The version number is broken down as vX.Y.Z-AAA-gHHHHH;

- The letter v.
- X = The "Milestone Release" Number
  - **0** indicates **"alpha"** level. The IP has **not** undergone full qualification. Parts of the IP **may be immature and untested**.
  - **1** indicates **"beta"** level. The IP has undergone qualification testing but has **not** been hardware verified.
  - **2** indicates **production** level. The IP has passed qualification testing and has been hardware verified.
- Y = The "Major Release" Number
- Z = The "Minor Release" Number
- A single hyphen character -
- AAA = The git commit count since the version number was tagged.
- A single hyphen character followed by the letter g -g
- HHHH = A git commit short hash which uniquely identifies a specific git commit inside the associated git repository.

CHAPTER

SIX

NAMING

6.1 Library Naming

Libraries in the Google open source PDKs are named using the following scheme;

> **:lib_process:`<Process name>`** _ **:lib_src:`<Library Source Abbreviation>`** _ **:lib_type:`<Library Type Abbreviation>`** [_ **:lib_name:`<Library Name>`**]

All sections are **lower case** and separated by an **underscore**. All sections must start with an alpha character (they must not start with a number).

The sections are;

- The **:lib_process:`Process name`** in is the name of the process technology.
- The **:lib_src:`Library Source Abbreviations`** is a short abbreviation for who created and is responsible for the library. The table below shows the current list of **:lib_src:`Library Source Abbreviations`**;

Library Source	:lib_src:`Library Source Abbreviation`
Technology's foundry	**:lib_src:`fd`**
Efabless	**:lib_src:`ef`**
Oklahoma State University	**:lib_src:`osu`**

- The **:lib_type:`Library Type Abbreviation`** is a short two letter abbreviation for the type of content found in the library. The table below shows the current list of **:lib_type:`Library Type Abbreviations`**;

Library Type	:lib_type:`Library Type Abbreviation`
Primitive Cells	**:lib_type:`pr`**
Digital Standard Cells	**:lib_type:`sc`**
Build Space (Flash, SRAM, etc)	**:lib_type:`sp`**
IO and Periphery	**:lib_type:`io`**
Miscellaneous	**:lib_type:`xx`**

- The **:lib_name:`Library Name`** is an optional short abbreviated name used when there are multiple libraries of a given type released from a single **:lib_src:`library source`**. If only one library of a given type is going to ever be released, this can be left out.

CHAPTER

SEVEN

HOW TO CONTRIBUTE

We'd love to accept your patches and contributions to this project. There are just a few small guidelines you need to follow.

7.1 Contributor License Agreement

Contributions to this project must be accompanied by a Contributor License Agreement. You (or your employer) retain the copyright to your contribution; this simply gives us permission to use and redistribute your contributions as part of the project. Head over to https://cla.developers.google.com/ to see your current agreements on file or to sign a new one.

You generally only need to submit a CLA once, so if you've already submitted one (even if it was for a different project), you probably don't need to do it again.

7.2 Code reviews

All submissions, including submissions by project members, require review. We use GitHub pull requests for this purpose. Consult GitHub Help for more information on using pull requests.

7.3 Community Guidelines

This project follows Google's Open Source Community Guidelines.

CHAPTER

EIGHT

GOOGLE OPEN SOURCE COMMUNITY GUIDELINES

At Google, we recognize and celebrate the creativity and collaboration of open source contributors and the diversity of skills, experiences, cultures, and opinions they bring to the projects and communities they participate in.

Every one of Google's open source projects and communities are inclusive environments, based on treating all individuals respectfully, regardless of gender identity and expression, sexual orientation, disabilities, neurodiversity, physical appearance, body size, ethnicity, nationality, race, age, religion, or similar personal characteristic.

We value diverse opinions, but we value respectful behavior more.

Respectful behavior includes:

- Being considerate, kind, constructive, and helpful.
- Not engaging in demeaning, discriminatory, harassing, hateful, sexualized, or physically threatening behavior, speech, and imagery.
- Not engaging in unwanted physical contact.

Some Google open source projects may adopt an explicit project code of conduct, which may have additional detailed expectations for participants. Most of those projects will use our modified Contributor Covenant.

8.1 Resolve peacefully

We do not believe that all conflict is necessarily bad; healthy debate and disagreement often yields positive results. However, it is never okay to be disrespectful.

If you see someone behaving disrespectfully, you are encouraged to address the behavior directly with those involved. Many issues can be resolved quickly and easily, and this gives people more control over the outcome of their dispute. If you are unable to resolve the matter for any reason, or if the behavior is threatening or harassing, report it. We are dedicated to providing an environment where participants feel welcome and safe.

8.2 Reporting problems

Some Google open source projects may adopt a project-specific code of conduct. In those cases, a Google employee will be identified as the Project Steward, who will receive and handle reports of code of conduct violations. In the event that a project hasn't identified a Project Steward, you can report problems by emailing opensource@google.com.

We will investigate every complaint, but you may not receive a direct response. We will use our discretion in determining when and how to follow up on reported incidents, which may range from not taking action to permanent expulsion from the project and project-sponsored spaces. We will notify the accused of the report and provide them an opportunity to discuss it before any action is taken. The identity of the reporter will be omitted from the details of the report

supplied to the accused. In potentially harmful situations, such as ongoing harassment or threats to anyone's safety, we may take action without notice.

This document was adapted from the `IndieWeb Code of Conduct <https://indieweb.org/code-of-conduct> `__ and can also be found at https://opensource.google/conduct/.

CHAPTER

NINE

GOOGLE MAINTAINED OPEN SOURCE PDKS

This documentation includes information common to Google maintained open source PDKs.

It should be included into the documentation shipped with those PDKs.

CHAPTER

TEN

RESOURCES

The rendered documentation can be found at https://open-source-pdks.rtfd.io

The source of the documentation can be found at https://github.com/google/opens-source-pdks

Warning: This documentation is currently a **work in progress**.

CHAPTER

ELEVEN

CURRENT STATUS – EXPERIMENTAL PREVIEW

Some radii options for box corners used; they were ignored as pict2e was not found